Project Number: U2716-128-191

February 16, 2024

Sunmodo
14800 NE 65th Street
Vancouver, WA 98682

REFERENCE: Sunmodo Sunturf Ground Mount A4a
Ground Mount PV Array Installation

To Whom It May Concern:

Per request of Sunmodo, we have been asked to prepare the structural design of a ground-mounted PV solar array system with several foundation options as shown in the attached calculations. The adopted building code in this jurisdiction is the 2015 International Building Code. Vector Structural Engineering requires that we review each site specific install, and we are not liable for installs at site specific locations we have not reviewed. This document does not address site-specific installations. The following design parameters are used in our analysis:

- Minimum Design Loads for Buildings and Other Structures (ASCE 7-10)
- Design wind speed for risk category I structures: 115 mph
- Wind exposure: B
- Ground snow load: 70 psf
- The ground screws and helical piers must be tested to 1.5 times uplift and 2.0 times lateral reactions found in the table below. A minimum of one ground screw or helical pier must be tested.

Load (ASD)	Value (lbs)	Factor of Safety	Test Value (lbs)
UPLIFT	2070	1.5	3105
LATERAL	1460	2	2920

Foundation concrete shall have a minimum compressive strength of 2500 psi at 28 days. Cement for all concrete shall be Type I or II with a minimum of 6% entrained air with a water/cement ratio of 0.50. Maximum aggregate size shall be 3/4". No special inspection of concrete strength is required.

Footings are designed based on an allowable soil bearing pressure of 1500 psf an allowable skin friction of 250 psf, an allowable lateral bearing pressure of 150 pcf, and a coefficient of friction of 0.3. Vector Structural Engineering strongly recommends independent soils testing be performed by a licensed geotechnical engineer to verify the assumed soil parameters.

All ground mounts are to be installed per manufacturer's recommendations. The use of solar panel support span tables provided by the manufacturer is allowed only where the site conditions and solar panel configuration match the description of the span tables. Electrical engineering is beyond our scope. All work performed must be in accordance with accepted industry-wide methods and applicable safety standards. Vector Structural Engineering assumes no responsibility for improper installation of the solar panels.

Very truly yours,

VECTOR STRUCTURAL ENGINEERING, LLC

COMMONWEALTH OF MASSACHUSETTS
JACOB S. PROCTOR
CIVIL
No. 54953
REGISTERED PROFESSIONAL ENGINEER

02/16/2024

Jacob Proctor, P.E.
License: 54953 - Expires: 06/30/2024
Project Engineer

Enclosures

JSP/stb

VECTOR ENGINEERS
651 W GALENA PARK BLVD. #101 (801) 990-1775
DRAPER, UTAH 84020 (801) 990-1776 FAX

JOB NO. U2716-128-191
PROJECT SUNMODO SUNTURF GROUND MOUNTS A4A
SUBJECT ALL OPTIONS

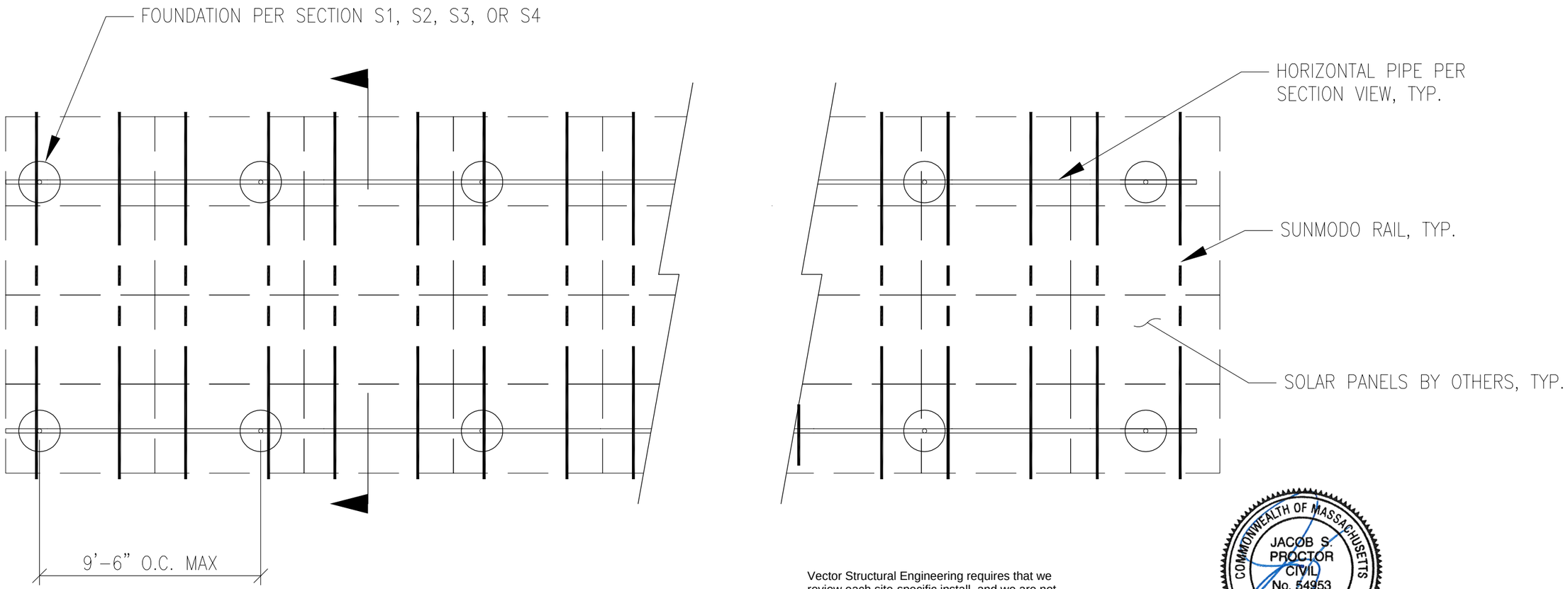

Vector Structural Engineering requires that we review each site-specific install, and we are not liable for installs at site-specific locations we have not reviewed. This document does not address site-specific installations.

COMMONWEALTH OF MASSACHUSETTS
JACOB S. PROCTOR
CIVIL
No. 54953
REGISTERED PROFESSIONAL ENGINEER

PV ARRAY PLAN

02/16/2024

N.T.S.

P1

VECTOR ENGINEERS

JOB NO. U2716-128-191

PROJECT SUNMODO SUNTURF GROUND MOUNTS A4A

SUBJECT DRILLED PIER OPTION

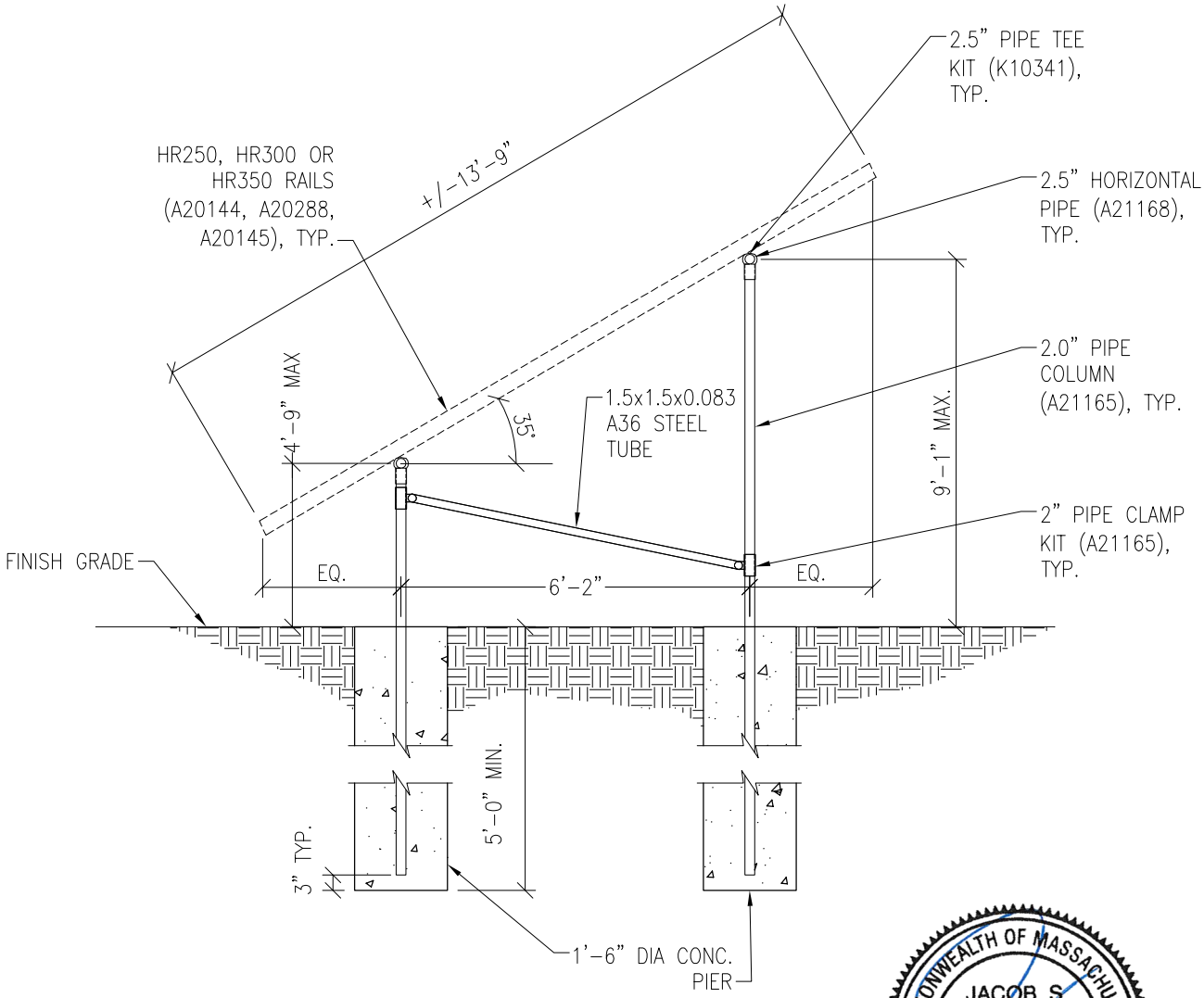

COMMONWEALTH OF MASSACHUSETTS
JACOB S. PROCTOR
CIVIL
No. 54953
REGISTERED PROFESSIONAL ENGINEER

Vector Structural Engineering requires that we review each site-specific install, and we are not liable for installs at site-specific locations we have not reviewed. This document does not address site-specific installations.

PV ARRAY SECTION 02/16/2024

N.T.S.

S1

651 W GALENA PARK BLVD. #101
DRAPER, UTAH 84020
(801) 990-1775
(801) 990-1776 FAX
WWW.VECTORSE.COM

VECTOR ENGINEERS

JOB NO. U2716-128-191

PROJECT SUNMODO SUNTURF GROUND MOUNTS A4A

SUBJECT HELICAL PIER OPTION

NOTES:

1. For ground mount components see Section S1.
2. A minimum of (1) helical pier must be load-tested as follows:
   - 2.1. Safety factor for uplift = 1.5,
   - 2.2. Safety factor for lateral loads = 2.0
   - 2.3. Upward deflection limit = 1/2"
   - 2.4. Lateral deflection limit = 1"
   - 2.5. The load tests must be performed by an approved contractor.

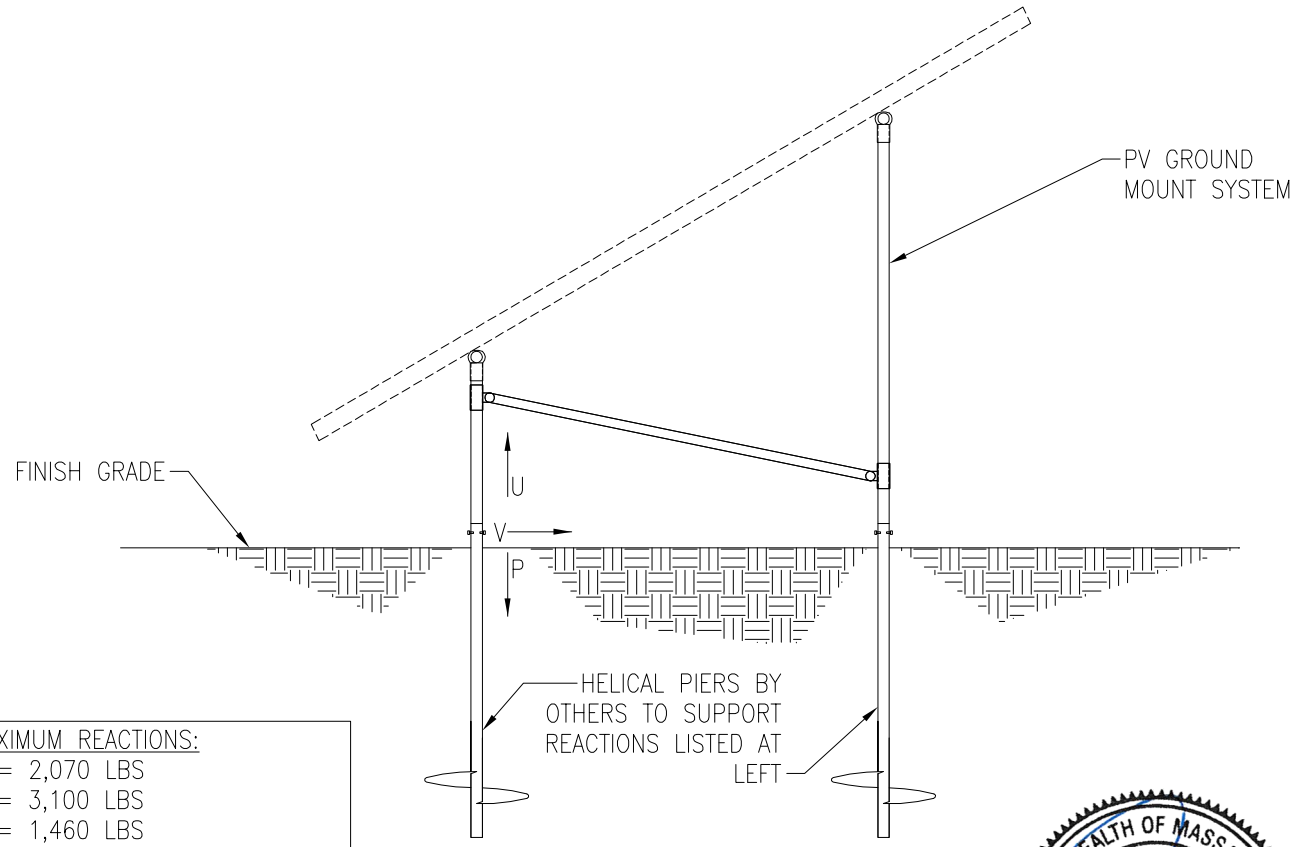

MAXIMUM REACTIONS:
U = 2,070 LBS
P = 3,100 LBS
V = 1,460 LBS

COMMONWEALTH OF MASSACHUSETTS
JACOB S. PROCTOR
CIVIL
No. 54953
REGISTERED PROFESSIONAL ENGINEER

Vector Structural Engineering requires that we review each site-specific install, and we are not liable for installs at site-specific locations we have not reviewed. This document does not address site-specific installations.

PV ARRAY SECTION 02/16/2024

N.T.S.

S2

651 W GALENA PARK BLVD. #101
DRAPER, UTAH 84020
(801) 990-1775
(801) 990-1776 FAX
WWW.VECTORSE.COM

VECTOR ENGINEERS

JOB NO. U2716-128-191

PROJECT SUNMODO SUNTURF GROUND MOUNTS A4A

SUBJECT GROUND SCREW OPTION

NOTES:
1. For ground mount components see Section S1.
2. A minimum of (1) ground screw must be load-tested as follows:
   2.1. Safety factor for uplift = 1.5,
   2.2. Safety factor for lateral loads = 2.0
   2.3. Upward deflection limit = 1/2"
   2.4. Lateral deflection limit = 1"
   2.5. The load tests must be performed by an approved contractor.

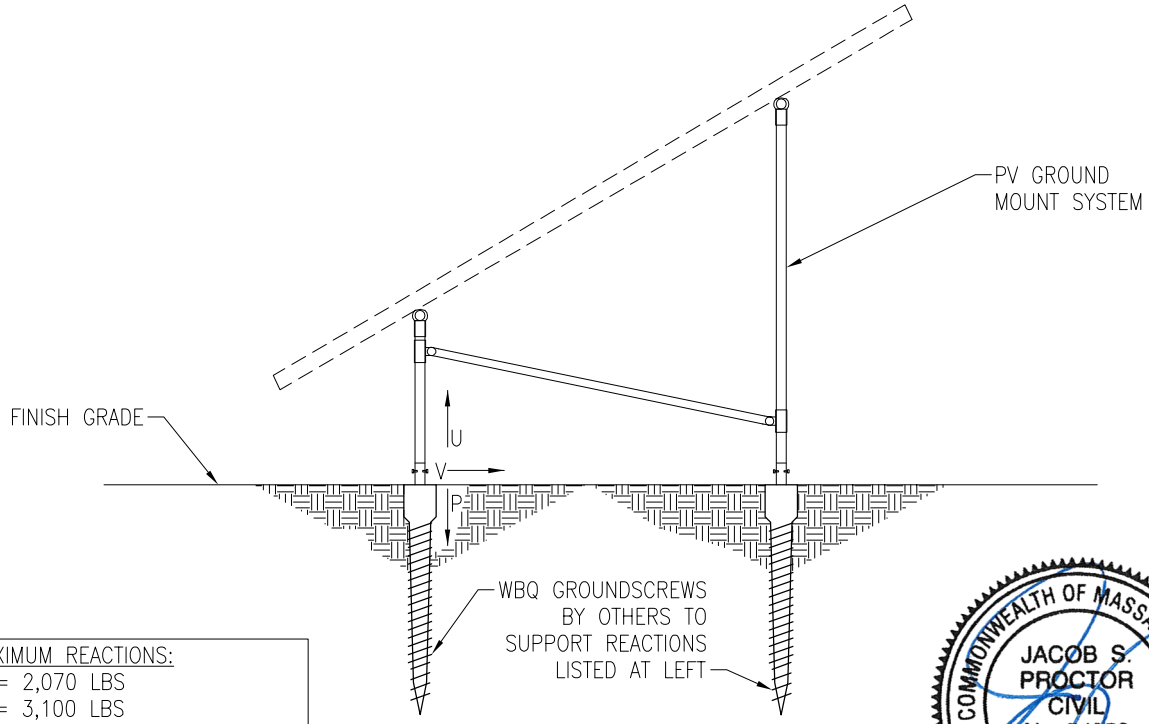

MAXIMUM REACTIONS:
U = 2,070 LBS
P = 3,100 LBS
V = 1,460 LBS

COMMONWEALTH OF MASSACHUSETTS
JACOB S. PROCTOR
CIVIL
No. 54953
REGISTERED PROFESSIONAL ENGINEER

02/16/2024

Vector Structural Engineering requires that we review each site-specific install, and we are not liable for installs at site-specific locations we have not reviewed. This document does not address site-specific installations.

PV ARRAY SECTION

N.T.S.

S3

651 W GALENA PARK BLVD. #101
DRAPER, UTAH 84020
(801) 990-1775
(801) 990-1776 FAX
WWW.VECTORSE.COM

VECTOR ENGINEERS

JOB NO. U2716-128-191

PROJECT SUNMODO SUNTURF GROUND MOUNTS A4A

SUBJECT BALLASTED BLOCK OPTION

NOTES:

1. For ground mount components see Section S1.

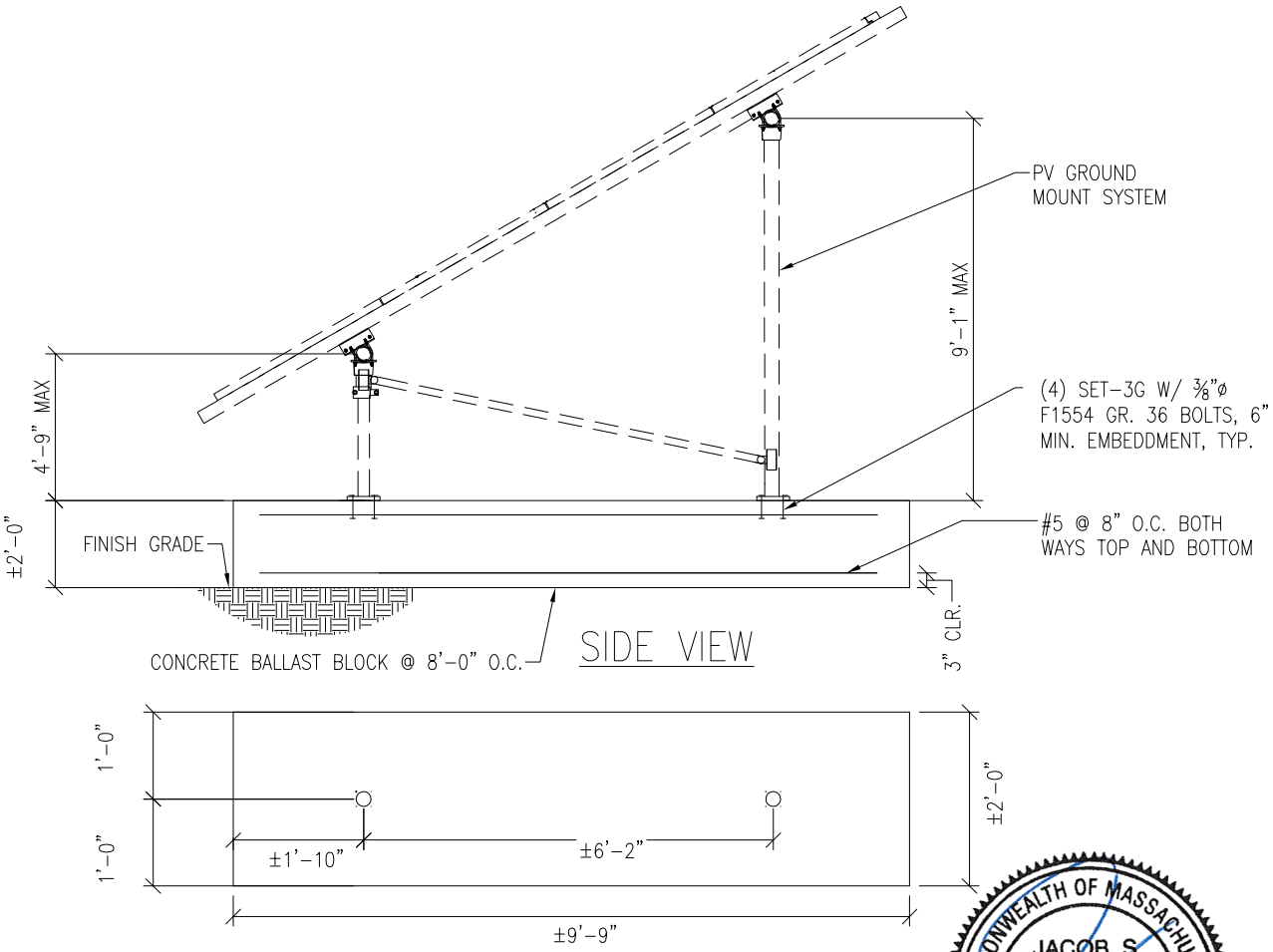

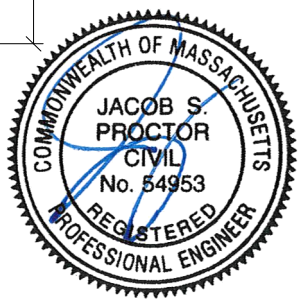

Vector Structural Engineering requires that we review each site-specific install, and we are not liable for installs at site-specific locations we have not reviewed. This document does not address site-specific installations.

PV ARRAY SECTION

N.T.S.

02/16/2024

S4

651 W GALENA PARK BLVD. #101
DRAPER, UTAH 84020
(801) 990-1775
(801) 990-1776 FAX
WWW.VECTORSE.COM

JOB NO.: U2716-128-191 **DESIGNED:** STB
DATE: 08/15/19

PROJECT: A4a – Sunmodo Sunturf GM **SUBJECT:** Dead Load

Design Weight:

Individual Panel Weight [lb]:	50.7
Panel Transverse Length (T5) [in]:	40.0
Panel Transverse Length (T5) [ft]:	3.3
Panel Longitudinal Length (L2) [in]:	67.0
Panel Longitudinal Length (L2) [ft]:	5.6
Individual Panel Area [ft^2]:	18.6
Individual Panel Weight [psf]:	2.7
# of Panels in Transverse Direction:	4
Approximate Transverse Length (T4) [ft]:	13.3
# of Panels in Longitudinal Direction:	12
Approximate Longitudinal Length (L1) [ft]:	67.0
Transverse Column Spacing (T1) [ft]:	6.2
Longitudinal Column Spacing (L3) [ft]:	9.5
# of Columns in Longitudinal Direction:	8
# of Columns in Transverse Direction:	2
Total Number of Columns:	16
Panel Slope from Horizontal (a) [°]:	35.0
Short Column Height (H1) [ft]:	4.6
Approximate Tall Column Height (H2) [ft]:	8.9
Transverse Brace between Columns :	Yes
Approximate Brace Length (B1) [ft]:	8.0
Weight of Columns [plf]:	3.7
Weight of Cross Pipe [plf]:	3.7
Weight of Brace [plf]:	3.7
Tributary Transverse Length per Column [ft]:	6.7
Tributary Longitudinal Length per Column [ft]:	9.5
Tributary Area per Column [ft^2]:	63.3
Rail Weight [plf]:	1.0
Transverse Rail Weight per Column [lb]:	26.7
Longitudinal Rail Weight per Column [lb]:	34.7
Tall Column Weight [lb]:	32.6
Panel Weight per Column [lb]:	172.5
Rail Weight per Column [lb]:	26.7
Cross Pipe Weight per Column [lb]:	34.7
Brace Weight per Column [lb]:	14.6
Total Weight per Column (1.0 D) [lb]:	**281.1**

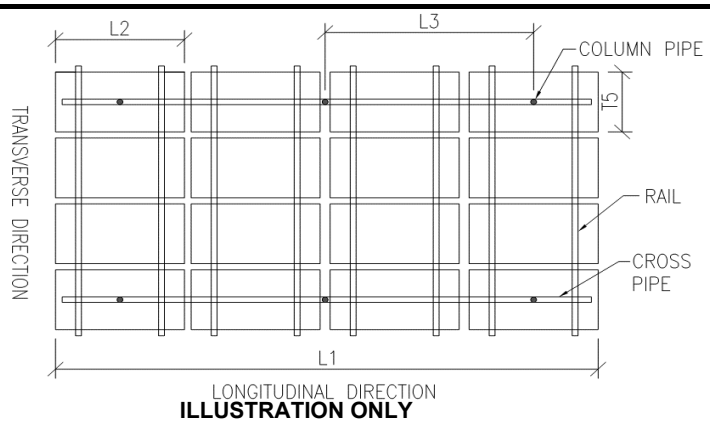

ILLUSTRATION ONLY

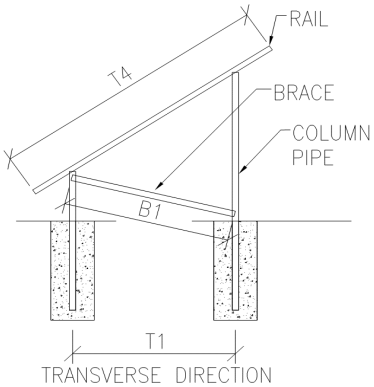

ILLUSTRATION ONLY

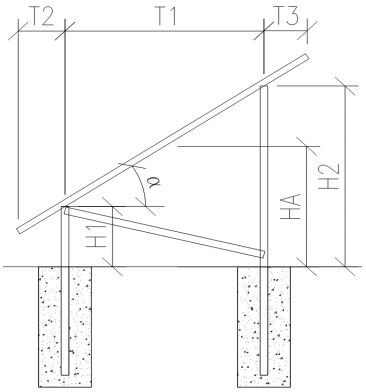

ILLUSTRATION ONLY

Assumptions:
- T2 = T3

JOB NO.: U2716-128-191 **DESIGNED:** STB
DATE: 08/15/19

PROJECT: A4a – Sunmodo Sunturf GM **SUBJECT:** Snow Load

SNOW LOAD (S):

ASCE 7 Standard:	10	
Panel Slope from Horizontal [°]:	35.0	
Snow Ground Load, p_g [psf]:	70.0	(Section 7.2)
Terrain Category:	B	(Table 7-2)
Exposure of Roof:	Fully Exposed	(Table 7-2)
Exposure Factor, C_e:	0.9	(Table 7-2)
Thermal Factor, C_t:	1.2	(Table 7-3)
Risk Category:	I	(Table 1.5-1)
Importance Factor, I_S:	0.8	(Table 1.5-2)
Flat Roof Snow Load, p_f [psf]:	42	(Equation 7.3-1)
Minimum Roof Snow Load, p_m [psf]:	0	(Section 7.3.4)
Unobstructed Slippery Surface?	Yes	(Section 7.4)
Slope Factor Figure:	Figure 7-2c	(Section 7.4)
Roof Slope Factor, C_s:	0.636	(Figure 7-2)
Sloped Roof Snow Load, p_s [psf]:	27	(Equation 7.4-1)
Design Snow Load, S [psf]:	27	
Tributary Transverse Length [ft]:	5.6	
Tributary Longitudinal Length [ft]:	8	
Tributary Area per Column [ft^2]:	45.0	
Snow Load per Column (1.0 S) [lb]:	**1212.3**	

JOB NO.: U2716-128-191 **DESIGNED:** STB
DATE: 08/15/19

PROJECT: A4a – Sunmodo Sunturf GM **SUBJECT:** Wind Pressure

Design Wind Load:

ASCE 7 Standard:	10	
Basic Wind Speed, V [mph]:	115	
Risk Category:	I	
Exposure Category	B	(Section 26.7.3)
Velocity Pressure Exposure Coefficient, K_h:	0.57	(Table 27.3-1)
Topographic Factor, K_{ht}:	1.0	(Section 26.8.2)
Wind Directionality Factor, K_d:	0.85	(Table 26.6-1)
Internal Pressure Coefficient, GC_{pi} :	0.00	(Table 26.11-1)
Velocity Pressure, q_h [psf]:	16.4	(Equation 27.3-1)
Gust Effect Factor, G:	0.85	(Section 26.9.1)
Panel Slope [degrees]:	35.0	

Net Pressure Coefficients (C_N) per: (Figure 27.4-4)

Clear Wind Flow	C_{NW}	C_{NL}
Case 1 (γ = 0°, Load Case A)	-1.80	-1.80
Case 2 (γ = 0°, Load Case B)	-2.43	-0.57
Case 3 (γ = 180°, Load Case A)	2.10	2.17
Case 4 (γ = 180°, Load Case B)	2.67	1.07

Design Wind Pressures (p) [psf] per: (Equation 27.4-3)

Clear Wind Flow	q_hGC_{NW}	q_hGC_{NL}
Case 1 (γ = 0°, Load Case A)	-25.1	-25.1
Case 2 (γ = 0°, Load Case B)	-33.9	-7.9
Case 3 (γ = 180°, Load Case A)	29.3	30.2
Case 4 (γ = 180°, Load Case B)	37.2	14.9

Wind Pressure on Each Side of Panels [psf]

Clear Wind Flow	Short Col. Pressure	Long Col. Pressure
Case 1 (γ = 0°, Load Case A)	-25.1	-25.1
Case 2 (γ = 0°, Load Case B)	-7.9	-33.9
Case 3 (γ = 180°, Load Case A)	29.3	30.2
Case 4 (γ = 180°, Load Case B)	37.2	14.9

Design Wind Load Per ASCE 7-10

$p = q_h G C_n$

Velocity Pressure Exposure Coefficient, K_h:	0.57	(Table 27.3-1)
Topographic Factor, K_{ht}:	1.0	(Section 26.8.2)
Wind Directionality Factor, K_d:	0.85	(Table 26.6-1)
Ultimate Wind Speed, V [mph]:	115	
Velocity Pressure, q_h [psf]:	16.4	(Equation 27.3-1)
Gust Effect Factor, G:	0.85	(Section 26.9.1)

γ= 90° or 270°

Force Coefficient, C_N:

Horizontal Distance from Winward Edge	Roof angle	Load Case	Obstructed Wind Flov
			CN
<= h	35	A	-0.8
		B	0.8
> h, <= 2h	35	A	-0.6
		B	0.5
> 2h	35	A	-0.3
		B	0.3

Design Wind Pressure, p [psf]:

	Roof angle	Load Case	Obstructed Wind Flov
<= h	35	A	-11.2
		B	11.2
> h, <= 2h	35	A	-8.4
		B	7.0
> 2h	35	A	-4.2
		B	4.2

Foundation Option 1: Drilled Concrete Pier

JOB NO.: U2716-128-191 **DESIGNED:** STB
DATE: 08/15/19

PROJECT: A4a – Sunmodo Sunturf GM

Drilled Pier Design

Design Loads:

Max. Shear, V [k]:	1.5	Max. Down, P_d [k]:	3.1
Max. Moment, M [k-ft]:	0.0	Max. Uplift, P_u [k]:	2.1

Pier Properties:

Pier Diameter, b [ft]:	1.5	Volume of Concrete [ft^3]:	9
Min. Pier Diameter, b_{min} (opt'l) [ft]:		Volume of Concrete [yd^3]:	0.3
Top of Pier Elevation [ft]:	0.00	Weight of Concrete [k]:	1.3
Pier Depth, d [ft]:	5.0		
Min. Pier Depth, d_{min} (opt'l) [ft]:			
Max. Pier Depth, d_{max} (opt'l) [ft]:			

Soil Properties:

Allow. Bearing Pressure [psf]:	1,500	Optional Parameters for Uplift:		
1/3 increase for short term loads?	No			
		Skin Friction [psf]:	250	(IBC 1810.3.3.1.4)
Lateral Bearing, S [pcf]:	150	Top Length to Ignore [ft]:	0.0	
Max. Lateral Bearing (opt'l) [psf]:		1/3 increase for short term loads?	No	
Top Depth to Ignore [ft]:	0.0			
1/3 increase for short term loads?	No	Combine w/ Bearing:	No	
1/2" deflection at t/o pier allowed:	Yes			

Check Bearing:

Bearing Capacity [k]:	5.9	**Bearing capacity OK.**

Check Uplift:

Uplift Capacity [k]:	7.1	**Uplift capacity OK.**

Check Lateral Bearing:

Applied Lateral Force, P [lb]:	1,460	
Point of Application, h [ft]:	0.0	
S_{1_max} [psf]:		
S_1 [psf]:	500	
A = 2.34*P/(S_1b):	4.56	
Required Pier Depth, d_{reqd} [ft]:	4.6	**Lateral bearing capacity OK.**

Foundation Option 2: Helical Pier

The ground screws and helical piers must be tested to 1.5 times uplift and 2.0 times lateral reactions found in the table below.

Load (ASD)	Value (lbs)	Factor of Safety	Test Value (lbs)
UPLIFT	2070	1.5	3105
LATERAL	1460	2	2920

Foundation Option 3: Ground Screw

The ground screws and helical piers must be tested to 1.5 times uplift and 2.0 times lateral reactions found in the table below.

Load (ASD)	Value (lbs)	Factor of Safety	Test Value (lbs)
UPLIFT	2070	1.5	3105
LATERAL	1460	2	2920

Foundation Option 4: Ballasted Block

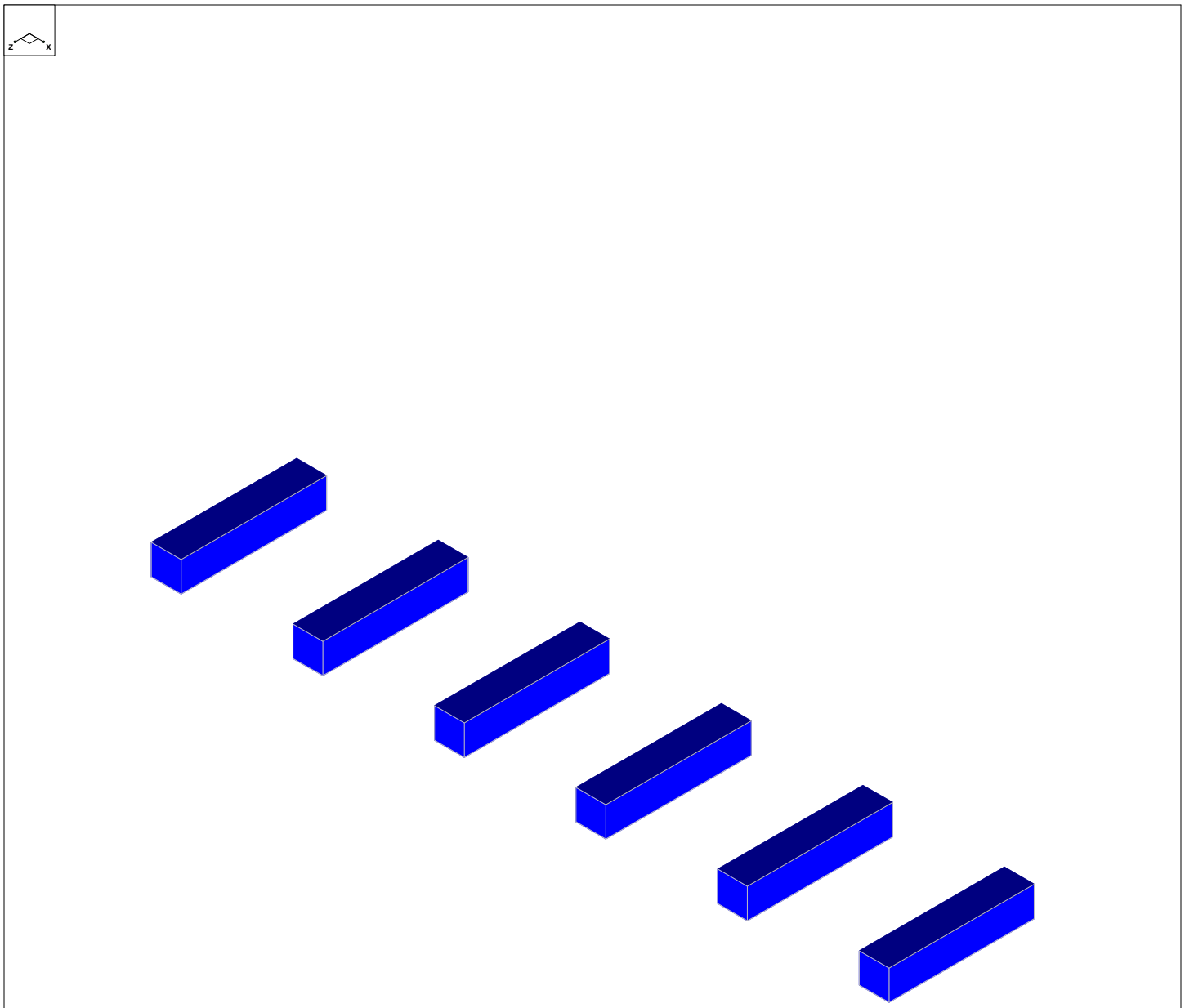

Results for LC 1, 1.0 D

Vector Structural Engineeri...		SK - 2
STB	Ground Mount	Aug 15, 2019 at 2:30 PM
U2716.128.191		Sunmodo Sunturf A4a.r3d

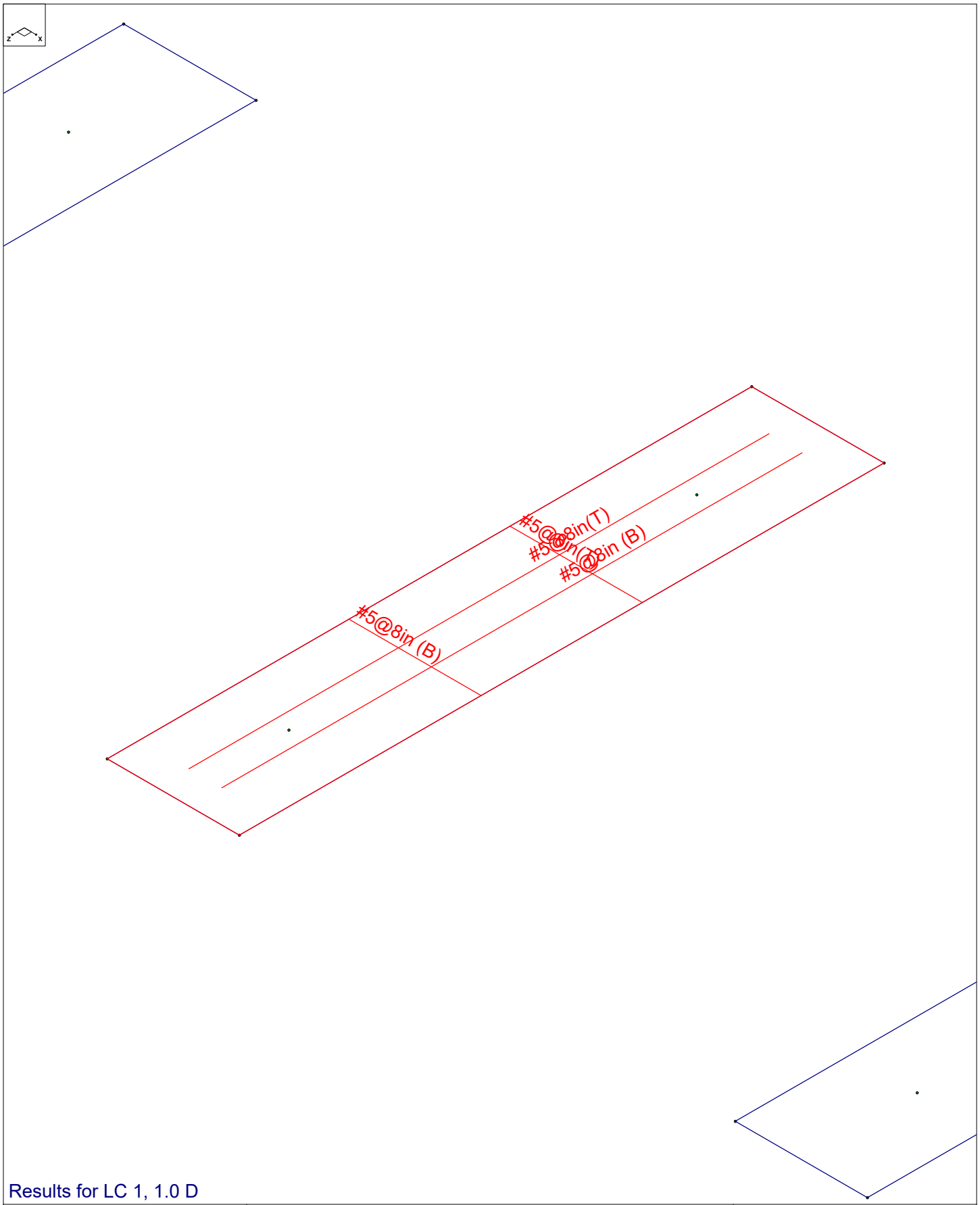

Results for LC 1, 1.0 D

Vector Structural Engineeri...		SK - 1
STB	Ground Mount	Aug 15, 2019 at 2:29 PM
U2716.128.191		Sunmodo Sunturf A4a.r3d

(Global) Model Settings

Display Sections for Member Calcs	5
Max Internal Sections for Member Calcs	100
Mesh Size (in)	12
Max Iterations	10
Merge Tolerance (in)	.12
Solver	Sparse Accelerated
Coefficient of Friction	.3
No. of Shear Regions	4
Shear Region Spacing Increment (in)	4
Min 1 Bar Dia Spacing for Beams?	No
Optimize footings for OTM / Sliding?	Yes
Parme Beta Factor	.65
Pile Safety Factor	3
Concrete Stress Block	Rectangular
Concrete Rebar Set	ASTM A615
Concrete Code	ACI 318-14
HR Steel Pile Code	AISC 14th(360-10): ASD
Wood Pile Code	AWC NDS-15: ASD

Concrete Properties

	Label	E [ksi]	G [ksi]	Nu	Therm (\...	Density[lb/ft^3]	f'c[psi]	Lambda	Flex Stee...	Shear St...
1	Conc3000NW	3156	1372	.15	.6	145	3000	1	60000	60000
2	Conc3500NW	3409	1482	.15	.6	145	3500	1	60000	60000
3	Conc4000NW	3644	1584	.15	.6	145	4000	1	60000	60000
4	Conc3000LW	2085	907	.15	.6	109.999	3000	.75	60000	60000
5	Conc3500LW	2252	979	.15	.6	109.999	3500	.75	60000	60000
6	Conc4000LW	2408	1047	.15	.6	109.999	4000	.75	60000	60000
7	Conc2500NW	3156	1372	.15	.6	145	2500	1	60000	60000

General Design Parameters

	Label	Max Bending Chk	Max Shear Chk	Top Cover[in]	Bottom Cover[in]
1	Typical	1	1	3	3

Slab Rebar Parameters

	Label	Top Bar	Bottom Bar	Max Top Bar Sp...	Min Top Bar Sp...	Max Bot Bar Sp...	Min Bot Bar Sp...	Spacing Incr...	Rebar Options
1	Typical	#5	#5	8	8	8	8	1	Optimize

Soil Definitions

	Label	Subgrade Modulus[lb/ft^3]	Allowable Bearing[psf]	Depth Properties	Default?
1	Default	1e+5	1500	None	Yes

Point Loads and Moments (Cat 1 : DL)

	Label	Direction	Magnitude[lb,lb-ft]
1	R3D_N1	X	-23.552
2	R3D_N1	Y	239.595
3	R3D_N2_1	X	-8.345
4	R3D_N2_1	Y	204.429
5	R3D_N132_2	X	1.101
6	R3D_N132_2	Y	248.362
7	R3D_N133_1	Y	269.943
8	R3D_N109_1	Y	250.036
9	R3D_N110A_1	X	1.488

Point Loads and Moments (Cat 1 : DL) (Continued)

	Label	Direction	Magnitude[lb,lb-ft]
10	R3D_N110A_1	Y	272.756
11	R3D_N121_1	Y	267.474
12	R3D_N122_1	Y	260.604
13	R3D_N133B	Y	268.075
14	R3D_N134B_1	Y	261.44
15	R3D_N151_1	X	22.592
16	R3D_N151_1	Y	240.799
17	R3D_N152_1	X	7.218
18	R3D_N152_1	Y	206.55

Point Loads and Moments (Cat 6 : RLL)

	Label	Direction	Magnitude[lb,lb-ft]
1	R3D_N1	X	-133.75
2	R3D_N1	Y	1165.809
3	R3D_N2_1	X	-49.695
4	R3D_N2_1	Y	1082.579
5	R3D_N132_2	X	6.479
6	R3D_N132_2	Y	1262.121
7	R3D_N133_1	X	-3.943
8	R3D_N133_1	Y	1473.834
9	R3D_N109_1	X	-3.39
10	R3D_N109_1	Y	1267.323
11	R3D_N110A_1	X	8.672
12	R3D_N110A_1	Y	1486.098
13	R3D_N121_1	X	3.855
14	R3D_N121_1	Y	1375.047
15	R3D_N122_1	X	3.138
16	R3D_N122_1	Y	1412.377
17	R3D_N133B	X	-1.777
18	R3D_N133B	Y	1377.844
19	R3D_N134B_1	X	-2.622
20	R3D_N134B_1	Y	1416.808
21	R3D_N151_1	X	128.51
22	R3D_N151_1	Y	1170.384
23	R3D_N152_1	X	44.449
24	R3D_N152_1	Y	1093.111

Point Loads and Moments (Cat 16 : OL1)

	Label	Direction	Magnitude[lb,lb-ft]
1	R3D_N1	X	131.727
2	R3D_N1	Y	-2556.132
3	R3D_N1	Z	1406.316
4	R3D_N2_1	X	49.917
5	R3D_N2_1	Y	463.992
6	R3D_N2_1	Z	-71.521
7	R3D_N132_2	X	-9.422
8	R3D_N132_2	Y	-3245.799
9	R3D_N132_2	Z	1960.078
10	R3D_N133_1	X	-8.478
11	R3D_N133_1	Y	760.341
12	R3D_N133_1	Z	-86.339
13	R3D_N109_1	Y	-3374.629
14	R3D_N109_1	Z	2042.154
15	R3D_N110A_1	X	-7.345
16	R3D_N110A_1	Y	819.209
17	R3D_N110A_1	Z	-87.928

Point Loads and Moments (Cat 16 : OL1) (Continued)

	Label	Direction	Magnitude[lb,lb-ft]
18	R3D_N121_1	X	-7.157
19	R3D_N121_1	Y	-3281.082
20	R3D_N121_1	Z	1864.733
21	R3D_N122_1	Y	692.861
22	R3D_N122_1	Z	-87.193
23	R3D_N133B	X	1.813
24	R3D_N133B	Y	-3326.039
25	R3D_N133B	Z	1893.696
26	R3D_N134B_1	X	-5.82
27	R3D_N134B_1	Y	718.492
28	R3D_N134B_1	Z	-87.488
29	R3D_N151_1	X	-117.356
30	R3D_N151_1	Y	-2687.473
31	R3D_N151_1	Z	1469.873
32	R3D_N152_1	X	-27.425
33	R3D_N152_1	Y	529.705
34	R3D_N152_1	Z	-73.074

Point Loads and Moments (Cat 17 : OL2)

	Label	Direction	Magnitude[lb,lb-ft]
1	R3D_N1	X	172.418
2	R3D_N1	Y	-2868.927
3	R3D_N1	Z	1183.771
4	R3D_N2_1	X	17.169
5	R3D_N2_1	Y	1047.082
6	R3D_N2_1	Z	-60.228
7	R3D_N132_2	X	-12.25
8	R3D_N132_2	Y	-3565.822
9	R3D_N132_2	Z	1655.587
10	R3D_N133_1	X	-10.159
11	R3D_N133_1	Y	1534.498
12	R3D_N133_1	Z	-72.932
13	R3D_N109_1	Y	-3701.914
14	R3D_N109_1	Z	1726.705
15	R3D_N110A_1	X	4.049
16	R3D_N110A_1	Y	1612.973
17	R3D_N110A_1	Z	-74.293
18	R3D_N121_1	X	-9.244
19	R3D_N121_1	Y	-3645.494
20	R3D_N121_1	Z	1570.206
21	R3D_N122_1	X	3.621
22	R3D_N122_1	Y	1454.475
23	R3D_N122_1	Z	-73.478
24	R3D_N133B	X	2.195
25	R3D_N133B	Y	-3694.149
26	R3D_N133B	Z	1596.428
27	R3D_N134B_1	X	-6.977
28	R3D_N134B_1	Y	1486.201
29	R3D_N134B_1	Z	-73.776
30	R3D_N151_1	X	-153.49
31	R3D_N151_1	Y	-2999.209
32	R3D_N151_1	Z	1238.549
33	R3D_N152_1	X	-7.686
34	R3D_N152_1	Y	1122.521
35	R3D_N152_1	Z	-61.554

Point Loads and Moments (Cat 18 : OL3)

	Label	Direction	Magnitude[lb,lb-ft]
1	R3D_N1	X	-158.302
2	R3D_N1	Y	3055.311
3	R3D_N1	Z	-1667.29
4	R3D_N2_1	X	-58.32
5	R3D_N2_1	Y	-572.822
6	R3D_N2_1	Z	84.794
7	R3D_N132_2	X	11.32
8	R3D_N132_2	Y	3876.99
9	R3D_N132_2	Z	-2324.013
10	R3D_N133_1	X	10.156
11	R3D_N133_1	Y	-932.402
12	R3D_N133_1	Z	102.37
13	R3D_N109_1	Y	4030.685
14	R3D_N109_1	Z	-2421.391
15	R3D_N110A_1	X	8.354
16	R3D_N110A_1	Y	-1003.196
17	R3D_N110A_1	Z	104.255
18	R3D_N121_1	X	8.597
19	R3D_N121_1	Y	3920.551
20	R3D_N121_1	Z	-2210.797
21	R3D_N122_1	Y	-851.597
22	R3D_N122_1	Z	103.377
23	R3D_N133B	X	-2.173
24	R3D_N133B	Y	3974.225
25	R3D_N133B	Z	-2245.199
26	R3D_N134B_1	X	6.972
27	R3D_N134B_1	Y	-882.336
28	R3D_N134B_1	Z	103.728
29	R3D_N151_1	X	141.028
30	R3D_N151_1	Y	3211.709
31	R3D_N151_1	Z	-1742.686
32	R3D_N152_1	X	31.981
33	R3D_N152_1	Y	-651.427
34	R3D_N152_1	Z	86.636

Point Loads and Moments (Cat 19 : OL4)

	Label	Direction	Magnitude[lb,lb-ft]
1	R3D_N1	X	-82.906
2	R3D_N1	Y	2017.745
3	R3D_N1	Z	-1448.585
4	R3D_N2_1	X	-72.731
5	R3D_N2_1	Y	85.15
6	R3D_N2_1	Z	73.649
7	R3D_N132_2	X	6.001
8	R3D_N132_2	Y	2628.335
9	R3D_N132_2	Z	-2014.117
10	R3D_N133_1	X	6.14
11	R3D_N133_1	Y	-16.007
12	R3D_N133_1	Z	88.715
13	R3D_N109_1	Y	2737.324
14	R3D_N109_1	Z	-2096.919
15	R3D_N110A_1	X	16.342
16	R3D_N110A_1	Y	-51.839
17	R3D_N110A_1	Z	90.332
18	R3D_N121_1	X	4.612
19	R3D_N121_1	Y	2621.819

Point Loads and Moments (Cat 19 : OL4) (Continued)

	Label	Direction	Magnitude[lb,lb-ft]
20	R3D_N121_1	Z	-1920.3
21	R3D_N122_1	X	4.548
22	R3D_N122_1	Y	33.583
23	R3D_N122_1	Z	89.743
24	R3D_N133B	X	-1.294
25	R3D_N133B	Y	2658.852
26	R3D_N133B	Z	-1948.554
27	R3D_N134B_1	X	4.214
28	R3D_N134B_1	Y	15.888
29	R3D_N134B_1	Z	90.004
30	R3D_N151_1	X	73.964
31	R3D_N151_1	Y	2136.115
32	R3D_N151_1	Z	-1512.957
33	R3D_N152_1	X	41.457
34	R3D_N152_1	Y	34.722
35	R3D_N152_1	Z	75.233

Point Loads and Moments (Cat 20 : OL5)

	Label	Direction	Magnitude[lb,lb-ft]
1	R3D_N1	X	-49.439
2	R3D_N1	Y	1119.679
3	R3D_N1	Z	-612.316
4	R3D_N2_1	X	-21.182
5	R3D_N2_1	Y	-219.202
6	R3D_N2_1	Z	28.192
7	R3D_N132_2	X	4.472
8	R3D_N132_2	Y	540.879
9	R3D_N132_2	Z	-336.949
10	R3D_N133_1	X	1.459
11	R3D_N133_1	Y	-133.517
12	R3D_N133_1	Z	14.755
13	R3D_N109_1	X	4.571
14	R3D_N109_1	Y	1099.942
15	R3D_N109_1	Z	-668.852
16	R3D_N110A_1	X	10.886
17	R3D_N110A_1	Y	-272.515
18	R3D_N110A_1	Z	27.439
19	R3D_N121_1	X	3.889
20	R3D_N121_1	Y	558.374
21	R3D_N121_1	Z	-315.658
22	R3D_N122_1	Y	-112.571
23	R3D_N122_1	Z	17.701
24	R3D_N133B	X	1.745
25	R3D_N133B	Y	555.115
26	R3D_N133B	Z	-315.355
27	R3D_N134B_1	X	1.272
28	R3D_N134B_1	Y	-118.69
29	R3D_N134B_1	Z	15.271
30	R3D_N151_1	X	34.573
31	R3D_N151_1	Y	455.3
32	R3D_N151_1	Z	-238.78
33	R3D_N152_1	X	6.765
34	R3D_N152_1	Y	-84.429
35	R3D_N152_1	Z	12.081

Point Loads and Moments (Cat 21 : OL6)

	Label	Direction	Magnitude[lb,lb-ft]
1	R3D_N1	X	46.061
2	R3D_N1	Y	-1097.92
3	R3D_N1	Z	601.511
4	R3D_N2_1	X	19.216
5	R3D_N2_1	Y	215.242
6	R3D_N2_1	Z	-27.074
7	R3D_N132_2	X	-4.022
8	R3D_N132_2	Y	-542.529
9	R3D_N132_2	Z	336.673
10	R3D_N133_1	X	-1.141
11	R3D_N133_1	Y	133.327
12	R3D_N133_1	Z	-14.723
13	R3D_N109_1	X	-4.047
14	R3D_N109_1	Y	-953.759
15	R3D_N109_1	Z	584.382
16	R3D_N110A_1	X	-10.172
17	R3D_N110A_1	Y	238.625
18	R3D_N110A_1	Z	-24.877
19	R3D_N121_1	X	-3.354
20	R3D_N121_1	Y	-550.773
21	R3D_N121_1	Z	310.834
22	R3D_N122_1	Y	110.457
23	R3D_N122_1	Z	-16.943
24	R3D_N133B	X	-1.48
25	R3D_N133B	Y	-556.594
26	R3D_N133B	Z	316.386
27	R3D_N134B_1	X	-1.125
28	R3D_N134B_1	Y	119.568
29	R3D_N134B_1	Z	-15.139
30	R3D_N151_1	X	-32.993
31	R3D_N151_1	Y	-453.358
32	R3D_N151_1	Z	238.808
33	R3D_N152_1	X	-6.68
34	R3D_N152_1	Y	84.611
35	R3D_N152_1	Z	-12.073

Slabs

	Label	Thickness [in]	Material	Local Axis Angle [deg]	Analysis Offset [in]
1	S1	24	Conc2500NW	0	0
2	S2	24	Conc2500NW	0	0
3	S3	24	Conc2500NW	0	0
4	S4	24	Conc2500NW	0	0
5	S5	24	Conc2500NW	0	0
6	S6	24	Conc2500NW	0	0

Load Combinations

	Label	Solve	Service	A...	SF	Cat...	Fa...	Cat...	Fa...	Cat...	Fa...	Cat...	Fa...	Cat...	Fa...	Cat...	Fa...	Cat...	Fa...	Cat...	Fa...	C...	F...	C...	F...
1	1.0 D	Yes	Yes		1.5	DL	1																		
2	1.0 D + 1....	Yes	Yes		1.5	DL	1	RLL	1																
3	1.0 D + 0....	Yes	Yes		1.5	DL	1	RLL		OL1	.6														
4	1.0 D + 0....	Yes	Yes		1.5	DL	1	RLL		OL2	.6														
5	1.0 D + 0....	Yes	Yes		1.5	DL	1	RLL		OL3	.6														
6	1.0 D + 0....	Yes	Yes		1.5	DL	1	RLL		OL4	.6														
7	1.0 D + 0....	Yes	Yes		1.5	DL	1	RLL		OL5	.6														
8	1.0 D + 0....	Yes	Yes		1.5	DL	1	RLL		OL6	.6														
9	1.0 D + 0....	Yes	Yes		1.5	DL	1	RLL	.75	OL1	.45														

Load Combinations (Continued)

	Label	Solve	Service	A..	SF	Cat..	Fa...	Cat..	Fa...	Cat..	Fa...	Cat..	Fa...	Cat..	Fa...	Cat..	Fa...	Cat..	Fa...	Cat..	Fa...	C...	F...	C...	F...
10	1.0 D + 0....	Yes	Yes		1.5	DL	1	RLL	.75	OL2	.45														
11	1.0 D + 0....	Yes	Yes		1.5	DL	1	RLL	.75	OL3	.45														
12	1.0 D + 0....	Yes	Yes		1.5	DL	1	RLL	.75	OL4	.45														
13	1.0 D + 0....	Yes	Yes		1.5	DL	1	RLL	.75	OL5	.45														
14	1.0 D + 0....	Yes	Yes		1.5	DL	1	RLL	.75	OL6	.45														
15	0.6 D + 0....	Yes	Yes			DL	.6	RLL		OL1	.6														
16	0.6 D + 0....	Yes	Yes			DL	.6	RLL		OL2	.6														
17	0.6 D + 0....	Yes	Yes			DL	.6	RLL		OL3	.6														
18	0.6 D + 0....	Yes	Yes			DL	.6	RLL		OL4	.6														
19	0.6 D + 0....	Yes	Yes			DL	.6	RLL		OL5	.6														
20	0.6 D + 0....	Yes	Yes			DL	.6	RLL		OL6	.6														
21																									
22	1.4D	Yes				DL	1.4																		
23	1.2D+1.6SL	Yes				DL	1.2	RLL	1.6																
24	1.2D+1.6S...	Yes				DL	1.2	RLL	1.6	OL1	.5														
25	1.2D+1.6S...	Yes				DL	1.2	RLL	1.6	OL2	.5														
26	1.2D+1.6S...	Yes				DL	1.2	RLL	1.6	OL3	.5														
27	1.2D+1.6S...	Yes				DL	1.2	RLL	1.6	OL4	.5														
28	1.2D+1.6S...	Yes				DL	1.2	RLL	1.6	OL5	.5														
29	1.2D+1.6S...	Yes				DL	1.2	RLL	1.6	OL6	.5														
30	1.2D+1.0...	Yes				DL	1.2			OL1	1														
31	1.2D-1.0Wx	Yes				DL	1.2			OL2	1														
32	1.2D+1.0...	Yes				DL	1.2			OL3	1														
33	1.2D-1.0Wz	Yes				DL	1.2			OL4	1														
34	1.2D+1.0...	Yes				DL	1.2			OL5	1														
35	1.2D-1.0...	Yes				DL	1.2			OL6	1														
36	.9D+1.0Wx	Yes				DL	.9			OL1	1														
37	.9D-1.0Wx	Yes				DL	.9			OL2	1														
38	.9D+1.0Wz	Yes				DL	.9			OL3	1														
39	.9D-1.0Wz	Yes				DL	.9			OL4	1														
40	.9D+1.0W...	Yes				DL	.9			OL5	1														
41	.9D-1.0W90	Yes				DL	.9			OL6	1														

Design Strips

	Label	Rebar Angle from Pl...	No. of Design Cuts	Design Rule
1	DS1	0	50	Typical
2	DS2	90	50	Typical

Load Categories

	Category	Point Loads	Line Loads	Area Loads
1	DL	18		
2	RLL	24		
3	OL1	34		
4	OL2	35		
5	OL3	34		
6	OL4	35		
7	OL5	35		
8	OL6	35		

Strip Reinforcing

	Label	UC Top	LC	Top Bars	Governing ...	UC Bot	LC	Bot B...	Gover...	UC Shear	LC	Governing ...
1	DS1	.015	26	#5@8in	DS1-X26	.035	37	#5@8in	DS1-...	.061	37	DS1-X50
2	DS2	.001	36	#5@8in	DS2-X26	.004	26	#5@8in	DS2-...	.009	26	DS2-X50

Slab Overturning Safety Factors

	LC	Slab	Angle[deg]	Mo-xx[lb-ft]	Ms-xx[lb-ft]	Mo-zz[lb-ft]	Ms-zz[lb-ft]	Ms-xx/Mo-xx	Ms-zz/Mo-zz
1	1	S1	0	0	29642.905	0	6162.827	9.999+	9.999+
2	1	S2	0	0	30208.663	0	6174.826	9.999+	9.999+
3	1	S3	0	0	30143.418	0	6183.088	9.999+	9.999+
4	1	S4	0	0	30151.211	0	6184.525	9.999+	9.999+
5	1	S5	0	0	30183.093	0	6171.112	9.999+	9.999+
6	1	S6	0	0	29662.086	0	6042.739	9.999+	9.999+
7	2	S1	0	0	40440.844	0	8778.104	9.999+	9.999+
8	2	S2	0	0	44420.865	0	8917.683	9.999+	9.999+
9	2	S3	0	0	43963.344	0	8956.526	9.999+	9.999+
10	2	S4	0	0	44011.708	0	8987.976	9.999+	9.999+
11	2	S5	0	0	44287.644	0	8901.995	9.999+	9.999+
12	2	S6	0	0	40552.669	0	7960.316	9.999+	9.999+
13	3	S1	0	13256.214	29822.774	1473.257	6162.827	2.25	4.183
14	3	S2	0	17514.423	30025.007	1542.066	6180.777	1.714	4.008
15	3	S3	0	16990.716	30141.789	1561.522	6183.088	1.774	3.96
16	3	S4	0	17211.748	30148.013	1569.337	6184.525	1.752	3.941
17	3	S5	0	16867.703	30006.827	1512.754	6175.517	1.779	4.082
18	3	S6	0	13885.491	29836.018	1468.398	6161.98	2.149	4.196
19	4	S1	0	13876.239	29822.774	1320.611	6162.827	2.149	4.667
20	4	S2	0	17873.393	30025.007	1258.224	6174.826	1.68	4.908
21	4	S3	0	17584.999	30141.789	1321.359	6183.088	1.714	4.679
22	4	S4	0	17813.908	30148.013	1330.507	6184.525	1.692	4.648
23	4	S5	0	17225.643	30006.827	1245.684	6175.517	1.742	4.958
24	4	S6	0	14480.014	29836.018	1319.424	6161.98	2.06	4.67
25	5	S1	0	1287.706	29642.905	0	7912.267	9.999+	9.999+
26	5	S2	0	3162.16	30208.663	0	7981.295	9.553	9.999+
27	5	S3	0	2303.969	30143.418	0	8014.144	9.999+	9.999+
28	5	S4	0	2433.337	30151.211	0	8033.899	9.999+	9.999+
29	5	S5	0	2876.821	30183.093	0	7912.094	9.999+	9.999+
30	5	S6	0	1581.234	29662.086	0	7371.297	9.999+	9.999+
31	6	S1	0	0	30621.214	0	7611.328	9.999+	9.999+
32	6	S2	0	0	30562.984	0	7766.508	9.999+	9.999+
33	6	S3	0	0	30991.942	0	7765.338	9.999+	9.999+
34	6	S4	0	0	30921.944	0	7785.866	9.999+	9.999+
35	6	S5	0	0	30686.942	0	7723.94	9.999+	9.999+
36	6	S6	0	0	30453.203	0	7206.735	9.999+	9.999+
37	7	S1	0	521.477	29642.905	0	6787.859	9.999+	9.999+
38	7	S2	0	867.832	30208.663	0	6652.734	9.999+	9.999+
39	7	S3	0	283.678	30143.418	0	6445.902	9.999+	9.999+
40	7	S4	0	319.188	30151.211	0	6442.76	9.999+	9.999+
41	7	S5	0	432.546	30183.093	0	6408.412	9.999+	9.999+
42	7	S6	0	176.47	29662.086	0	6215.655	9.999+	9.999+
43	8	S1	0	5678.452	29822.774	607.939	6162.827	5.252	9.999+
44	8	S2	0	4951.214	30025.007	446.142	6180.777	6.064	9.999+
45	8	S3	0	2852.865	30141.789	268.214	6183.088	9.999+	9.999+
46	8	S4	0	2879.776	30148.013	265.342	6184.525	9.999+	9.999+
47	8	S5	0	2823.366	30006.827	251.717	6175.517	9.999+	9.999+
48	8	S6	0	2336.694	29836.018	268.856	6161.98	9.999+	9.999+
49	9	S1	0	9942.16	38165.684	1104.942	8124.285	3.839	7.353
50	9	S2	0	13135.817	39500.285	1156.55	8253.767	3.007	7.137
51	9	S3	0	12743.037	40159.917	1171.141	8284.145	3.152	7.074
52	9	S4	0	12908.811	40188.567	1177.003	8273.915	3.113	7.03
53	9	S5	0	12650.777	39435.122	1134.566	8231.288	3.117	7.255
54	9	S6	0	10414.118	38219.917	1101.299	8119.04	3.67	7.372
55	10	S1	0	10407.179	38165.684	990.458	8124.285	3.667	8.203
56	10	S2	0	13405.045	39500.285	943.668	8231.969	2.947	8.723
57	10	S3	0	13188.749	40159.917	991.019	8284.145	3.045	8.359

Slab Overturning Safety Factors (Continued)

	LC	Slab	Angle[deg]	Mo-xx[lb-ft]	Ms-xx[lb-ft]	Mo-zz[lb-ft]	Ms-zz[lb-ft]	Ms-xx/Mo-xx	Ms-zz/Mo-zz
58	10	S4	0	13360.431	40188.567	997.881	8273.915	3.008	8.291
59	10	S5	0	12919.232	39435.122	934.263	8231.288	3.052	8.81
60	10	S6	0	10860.011	38219.917	989.568	8119.04	3.519	8.205
61	11	S1	0	965.779	37741.359	0	9436.365	9.999+	9.999+
62	11	S2	0	2371.62	40867.815	0	9586.82	9.999+	9.999+
63	11	S3	0	1727.977	40508.362	0	9636.458	9.999+	9.999+
64	11	S4	0	1825.003	40546.584	0	9674.144	9.999+	9.999+
65	11	S5	0	2157.615	40761.506	0	9525.01	9.999+	9.999+
66	11	S6	0	1185.926	37830.023	0	8477.34	9.999+	9.999+
67	12	S1	0	0	38475.092	0	9210.661	9.999+	9.999+
68	12	S2	0	0	41133.555	0	9425.729	9.999+	9.999+
69	12	S3	0	0	41144.756	0	9449.854	9.999+	9.999+
70	12	S4	0	0	41124.634	0	9488.119	9.999+	9.999+
71	12	S5	0	0	41139.392	0	9383.895	9.999+	9.999+
72	12	S6	0	0	38423.361	0	8353.919	9.999+	9.999+
73	13	S1	0	391.107	37741.359	0	8593.059	9.999+	9.999+
74	13	S2	0	650.874	40867.815	0	8590.399	9.999+	9.999+
75	13	S3	0	212.758	40508.362	0	8460.277	9.999+	9.999+
76	13	S4	0	239.391	40546.584	0	8480.79	9.999+	9.999+
77	13	S5	0	324.41	40761.506	0	8397.249	9.999+	9.999+
78	13	S6	0	132.352	37830.023	0	7610.609	9.999+	9.999+
79	14	S1	0	4258.839	38165.684	455.955	8124.285	8.962	9.999+
80	14	S2	0	3713.41	39500.285	334.607	8253.767	9.999+	9.999+
81	14	S3	0	2139.648	40159.917	201.16	8284.145	9.999+	9.999+
82	14	S4	0	2159.832	40188.567	199.006	8273.915	9.999+	9.999+
83	14	S5	0	2117.524	39435.122	188.788	8231.288	9.999+	9.999+
84	14	S6	0	1752.521	38219.917	201.642	8119.04	9.999+	9.999+
85	15	S1	0	13256.214	17893.664	1473.257	3697.696	1.35	2.51
86	15	S2	0	17514.423	18015.004	1542.066	3708.466	1.029	2.405
87	15	S3	0	16990.716	18085.073	1561.522	3709.853	1.064	2.376
88	15	S4	0	17211.748	18088.808	1569.337	3710.715	1.051	2.365
89	15	S5	0	16867.703	18004.096	1512.754	3705.31	1.067	2.449
90	15	S6	0	13885.491	17901.611	1468.398	3697.188	1.289	2.518
91	16	S1	0	13876.239	17893.664	1320.611	3697.696	1.29	2.8
92	16	S2	0	17873.393	18015.004	1258.224	3704.896	1.008	2.945
93	16	S3	0	17584.999	18085.073	1321.359	3709.853	1.028	2.808
94	16	S4	0	17813.908	18088.808	1330.507	3710.715	1.015	2.789
95	16	S5	0	17225.643	18004.096	1245.684	3705.31	1.045	2.975
96	16	S6	0	14480.014	17901.611	1319.424	3697.188	1.236	2.802
97	17	S1	0	1287.706	17785.743	0	5447.136	9.999+	9.999+
98	17	S2	0	3162.16	18125.198	0	5511.364	5.732	9.999+
99	17	S3	0	2303.969	18086.051	0	5540.909	7.85	9.999+
100	17	S4	0	2433.337	18090.727	0	5560.088	7.435	9.999+
101	17	S5	0	2876.821	18109.856	0	5443.649	6.295	9.999+
102	17	S6	0	1581.234	17797.252	0	4954.201	9.999+	9.999+
103	18	S1	0	0	18764.052	0	5146.197	9.999+	9.999+
104	18	S2	0	0	18479.518	0	5296.577	9.999+	9.999+
105	18	S3	0	0	18934.575	0	5292.103	9.999+	9.999+
106	18	S4	0	0	18861.46	0	5312.055	9.999+	9.999+
107	18	S5	0	0	18613.704	0	5255.495	9.999+	9.999+
108	18	S6	0	0	18588.369	0	4789.64	9.999+	9.999+
109	19	S1	0	521.477	17785.743	0	4322.728	9.999+	9.999+
110	19	S2	0	867.832	18125.198	0	4182.803	9.999+	9.999+
111	19	S3	0	283.678	18086.051	0	3972.667	9.999+	9.999+
112	19	S4	0	319.188	18090.727	0	3968.95	9.999+	9.999+
113	19	S5	0	432.546	18109.856	0	3939.967	9.999+	9.999+
114	19	S6	0	176.47	17797.252	0	3798.56	9.999+	9.999+

Slab Overturning Safety Factors (Continued)

	LC	Slab	Angle[deg]	Mo-xx[lb-ft]	Ms-xx[lb-ft]	Mo-zz[lb-ft]	Ms-zz[lb-ft]	Ms-xx/Mo-xx	Ms-zz/Mo-zz
115	20	S1	0	5678.452	17893.664	607.939	3697.696	3.151	6.082
116	20	S2	0	4951.214	18015.004	446.142	3708.466	3.639	8.312
117	20	S3	0	2852.865	18085.073	268.214	3709.853	6.339	9.999+
118	20	S4	0	2879.776	18088.808	265.342	3710.715	6.281	9.999+
119	20	S5	0	2823.366	18004.096	251.717	3705.31	6.377	9.999+
120	20	S6	0	2336.694	17901.611	268.856	3697.188	7.661	9.999+

Slab Sliding Safety Factors

	LC	Slab	Angle[deg]	Va-xx[lb]	Vr-xx[lb]	Va-zz[lb]	Vr-zz[lb]	SR-xx	SR-zz
1	1	S1	0	31.897	1829.71	0	1829.71	9.999+	9.999+
2	1	S2	0	1.488	1853.341	0	1853.341	9.999+	9.999+
3	1	S3	0	0	1854.926	0	1854.926	9.999+	9.999+
4	1	S4	0	0	1855.358	0	1855.358	9.999+	9.999+
5	1	S5	0	1.101	1851.994	0	1851.994	9.999+	9.999+
6	1	S6	0	29.81	1830.708	0	1830.708	9.999+	9.999+
7	2	S1	0	215.341	2504.226	0	2504.226	9.999+	9.999+
8	2	S2	0	6.77	2679.367	0	2679.367	9.999+	9.999+
9	2	S3	0	6.993	2691.153	0	2691.153	9.999+	9.999+
10	2	S4	0	4.4	2693.753	0	2693.753	9.999+	9.999+
11	2	S5	0	3.638	2672.781	0	2672.781	9.999+	9.999+
12	2	S6	0	202.769	2509.756	0	2509.756	9.999+	9.999+
13	3	S1	0	77.089	1453.125	800.877	1453.125	9.999+	1.814
14	3	S2	0	2.919	1393.365	1172.536	1393.365	9.999+	1.188
15	3	S3	0	4.294	1389.046	1066.524	1389.046	9.999+	1.302
16	3	S4	0	2.404	1385.999	1083.725	1385.999	9.999+	1.279
17	3	S5	0	9.639	1404.612	1124.243	1404.612	9.999+	1.249
18	3	S6	0	57.058	1442.31	838.079	1442.31	9.999+	1.721
19	4	S1	0	81.855	1501.778	674.126	1501.778	9.999+	2.228
20	4	S2	0	3.917	1477.331	991.448	1477.331	9.999+	1.49
21	4	S3	0	3.374	1460.543	898.037	1460.543	9.999+	1.626
22	4	S4	0	2.869	1457.927	913.591	1457.927	9.999+	1.596
23	4	S5	0	12.344	1486.356	949.593	1486.356	9.999+	1.565
24	4	S6	0	66.895	1492.904	706.197	1492.904	9.999+	2.114
25	5	S1	0	161.87	2276.558	949.498	2276.558	9.999+	2.398
26	5	S2	0	6.5	2398.289	1390.282	2398.289	9.999+	1.725
27	5	S3	0	5.158	2407.338	1264.452	2407.338	9.999+	1.904
28	5	S4	0	2.88	2411.898	1284.882	2411.898	9.999+	1.877
29	5	S5	0	13.987	2382.02	1332.986	2382.02	9.999+	1.787
30	5	S6	0	133.616	2291.559	993.63	2291.559	9.999+	2.306
31	6	S1	0	125.279	2208.231	824.962	2208.231	9.999+	2.677
32	6	S2	0	11.293	2336.728	1203.952	2336.728	9.999+	1.941
33	6	S3	0	5.496	2332.899	1098.334	2332.899	9.999+	2.124
34	6	S4	0	1.752	2336.811	1115.13	2336.811	9.999+	2.096
35	6	S5	0	8.386	2322.213	1155.241	2322.213	9.999+	2.01
36	6	S6	0	99.063	2221.458	862.634	2221.458	9.999+	2.575
37	7	S1	0	74.27	1991.796	350.475	1991.796	9.999+	5.683
38	7	S2	0	10.762	2002.277	384.848	2002.277	9.999+	5.203
39	7	S3	0	2.334	1935.171	178.774	1935.171	9.999+	9.999+
40	7	S4	0	1.81	1933.914	180.051	1933.914	9.999+	9.999+
41	7	S5	0	4.66	1925.32	193.316	1925.32	9.999+	9.959
42	7	S6	0	54.613	1897.464	136.019	1897.464	9.999+	9.999+
43	8	S1	0	7.269	1670.828	344.662	1670.828	9.999+	4.848
44	8	S2	0	7.043	1724.616	335.703	1724.616	9.999+	5.137
45	8	S3	0	2.012	1775.669	176.334	1775.669	9.999+	9.999+
46	8	S4	0	1.563	1776.693	180.748	1776.693	9.999+	9.83
47	8	S5	0	1.997	1778.338	193.17	1778.338	9.999+	9.206

Slab Sliding Safety Factors (Continued)

	LC	Slab	Angle[deg]	Va-xx[lb]	Vr-xx[lb]	Va-zz[lb]	Vr-zz[lb]	SR-xx	SR-zz
48	8	S6	0	6.006	1764.333	136.041	1764.333	9.999+	9.999+
49	9	S1	0	87.741	2053.158	600.658	2053.158	9.999+	3.418
50	9	S2	0	2.144	2127.879	879.402	2127.879	9.999+	2.42
51	9	S3	0	2.024	2132.687	799.893	2132.687	9.999+	2.666
52	9	S4	0	5.103	2132.135	812.793	2132.135	9.999+	2.623
53	9	S5	0	5.051	2132.048	843.182	2132.048	9.999+	2.529
54	9	S6	0	94.378	2048.696	628.559	2048.696	9.999+	3.259
55	10	S1	0	84.166	2089.648	505.594	2089.648	9.999+	4.133
56	10	S2	0	7.272	2190.853	743.586	2190.853	9.999+	2.946
57	10	S3	0	2.714	2186.309	673.528	2186.309	9.999+	3.246
58	10	S4	0	5.452	2186.081	685.193	2186.081	9.999+	3.19
59	10	S5	0	7.08	2193.356	712.195	2193.356	9.999+	3.08
60	10	S6	0	87.001	2086.641	529.648	2086.641	9.999+	3.94
61	11	S1	0	266.96	2670.733	712.123	2670.733	9.999+	3.75
62	11	S2	0	9.209	2881.571	1042.711	2881.571	9.999+	2.764
63	11	S3	0	9.113	2896.406	948.339	2896.406	9.999+	3.054
64	11	S4	0	1.14	2901.559	963.662	2901.559	9.999+	3.011
65	11	S5	0	12.668	2865.104	999.739	2865.104	9.999+	2.866
66	11	S6	0	237.384	2685.632	745.223	2685.632	9.999+	3.604
67	12	S1	0	239.517	2619.488	618.721	2619.488	9.999+	4.234
68	12	S2	0	12.803	2835.401	902.964	2835.401	9.999+	3.14
69	12	S3	0	9.366	2840.576	823.751	2840.576	9.999+	3.448
70	12	S4	0	1.986	2845.244	836.348	2845.244	9.999+	3.402
71	12	S5	0	8.467	2820.249	866.431	2820.249	9.999+	3.255
72	12	S6	0	211.469	2633.057	646.976	2633.057	9.999+	4.07
73	13	S1	0	201.26	2457.162	262.856	2457.162	9.999+	9.348
74	13	S2	0	12.405	2584.563	288.636	2584.563	9.999+	8.954
75	13	S3	0	6.995	2542.28	134.081	2542.28	9.999+	9.999+
76	13	S4	0	1.942	2543.072	135.038	2543.072	9.999+	9.999+
77	13	S5	0	5.673	2522.578	144.987	2522.578	9.999+	9.999+
78	13	S6	0	178.132	2390.062	102.015	2390.062	9.999+	9.999+
79	14	S1	0	140.106	2216.436	258.497	2216.436	9.999+	8.574
80	14	S2	0	.949	2376.317	251.778	2376.317	9.999+	9.438
81	14	S3	0	3.736	2422.654	132.251	2422.654	9.999+	9.999+
82	14	S4	0	4.472	2425.156	135.561	2425.156	9.999+	9.999+
83	14	S5	0	.68	2412.342	144.878	2412.342	9.999+	9.999+
84	14	S6	0	141.677	2290.213	102.031	2290.213	9.999+	9.999+
85	15	S1	0	89.848	721.241	800.877	721.241	8.027	.901
86	15	S2	0	3.514	652.029	1172.536	652.029	9.999+	.556
87	15	S3	0	4.294	647.076	1066.524	647.076	9.999+	.607
88	15	S4	0	2.404	643.856	1083.725	643.856	9.999+	.594
89	15	S5	0	10.079	663.814	1124.243	663.814	9.999+	.59
90	15	S6	0	68.983	710.026	838.079	710.026	9.999+	.847
91	16	S1	0	94.614	769.894	674.126	769.894	8.137	1.142
92	16	S2	0	3.322	735.995	991.448	735.995	9.999+	.742
93	16	S3	0	3.374	718.572	898.037	718.572	9.999+	.8
94	16	S4	0	2.869	715.784	913.591	715.784	9.999+	.783
95	16	S5	0	12.784	745.558	949.593	745.558	9.999+	.785
96	16	S6	0	78.819	760.621	706.197	760.621	9.65	1.077
97	17	S1	0	149.111	1544.674	949.498	1544.674	9.999+	1.627
98	17	S2	0	5.905	1656.952	1390.282	1656.952	9.999+	1.192
99	17	S3	0	5.158	1665.368	1264.452	1665.368	9.999+	1.317
100	17	S4	0	2.88	1669.755	1284.882	1669.755	9.999+	1.3
101	17	S5	0	13.546	1641.222	1332.986	1641.222	9.999+	1.231
102	17	S6	0	121.692	1559.275	993.63	1559.275	9.999+	1.569
103	18	S1	0	112.52	1476.347	824.962	1476.347	9.999+	1.79
104	18	S2	0	10.698	1595.392	1203.952	1595.392	9.999+	1.325

Slab Sliding Safety Factors (Continued)

	LC	Slab	Angle[deg]	Va-xx[lb]	Vr-xx[lb]	Va-zz[lb]	Vr-zz[lb]	SR-xx	SR-zz
105	18	S3	0	5.496	1590.928	1098.334	1590.928	9.999+	1.448
106	18	S4	0	1.752	1594.668	1115.13	1594.668	9.999+	1.43
107	18	S5	0	7.945	1581.416	1155.241	1581.416	9.999+	1.369
108	18	S6	0	87.139	1489.175	862.634	1489.175	9.999+	1.726
109	19	S1	0	61.511	1259.912	350.475	1259.912	9.999+	3.595
110	19	S2	0	10.167	1260.941	384.848	1260.941	9.999+	3.276
111	19	S3	0	2.334	1193.2	178.774	1193.2	9.999+	6.674
112	19	S4	0	1.81	1191.771	180.051	1191.771	9.999+	6.619
113	19	S5	0	4.22	1184.522	193.316	1184.522	9.999+	6.127
114	19	S6	0	42.689	1165.181	136.019	1165.181	9.999+	8.566
115	20	S1	0	20.028	938.944	344.662	938.944	9.999+	2.724
116	20	S2	0	7.638	983.28	335.703	983.28	9.999+	2.929
117	20	S3	0	2.012	1033.699	176.334	1033.699	9.999+	5.862
118	20	S4	0	1.563	1034.55	180.748	1034.55	9.999+	5.724
119	20	S5	0	2.437	1037.54	193.17	1037.54	9.999+	5.371
120	20	S6	0	5.918	1032.05	136.041	1032.05	9.999+	7.586

Envelope Slab Soil Pressures

	Label	UC	LC	Soil Pressure[psf]	Allowable Bearing[psf]	Point
1	S1	.412	11	617.819	1500	N1
2	S2	.56	16	839.5	1500	N20
3	S3	.51	16	765.302	1500	N24
4	S4	.538	16	807.272	1500	N28
5	S5	.482	16	722.379	1500	N29
6	S6	.42	11	629.874	1500	N35

1.Project information

Customer company:
Customer contact name:
Customer e-mail:
Comment:

Project description:
Location:
Fastening description:

2. Input Data & Anchor Parameters

General
Design method:ACI 318-14
Units: Imperial units

Anchor Information:
Anchor type: Bonded anchor
Material: F1554 Grade 36
Diameter (inch): 0.375
Effective Embedment depth, h_{ef} (inch): 4.000
Code report: ICC-ES ESR-4057
Anchor category: -
Anchor ductility: Yes
h_{min} (inch): 5.25
c_{ac} (inch): 7.12
C_{min} (inch): 1.75
S_{min} (inch): 3.00

Base Material
Concrete: Normal-weight
Concrete thickness, h (inch): 30.00
State: Cracked
Compressive strength, f'_c (psi): 2500
$\Psi_{c,V}$: 1.0
Reinforcement condition: B tension, B shear
Supplemental reinforcement: Not applicable
Reinforcement provided at corners: No
Ignore concrete breakout in tension: No
Ignore concrete breakout in shear: No
Hole condition: Dry concrete
Inspection: Periodic
Temperature range, Short/Long: 150/110°F
Ignore 6do requirement: Not applicable
Build-up grout pad: No

Base Plate
Length x Width x Thickness (inch): 4.75 x 4.75 x 0.31

Recommended Anchor
Anchor Name: SET-3G - SET-3G w/ 3/8"Ø F1554 Gr. 36
Code Report: ICC-ES ESR-4057

Load and Geometry
Load factor source: ACI 318 Section 5.3
Load combination: not set
Seismic design: No
Anchors subjected to sustained tension: No
Apply entire shear load at front row: No
Anchors only resisting wind and/or seismic loads: No

Strength level loads:

N_{ua} [lb]: 3450
V_{uax} [lb]: 300
V_{uay} [lb]: -2440
M_{ux} [ft-lb]: 0
M_{uy} [ft-lb]: 0
M_{uz} [ft-lb]: 0

<Figure 1>

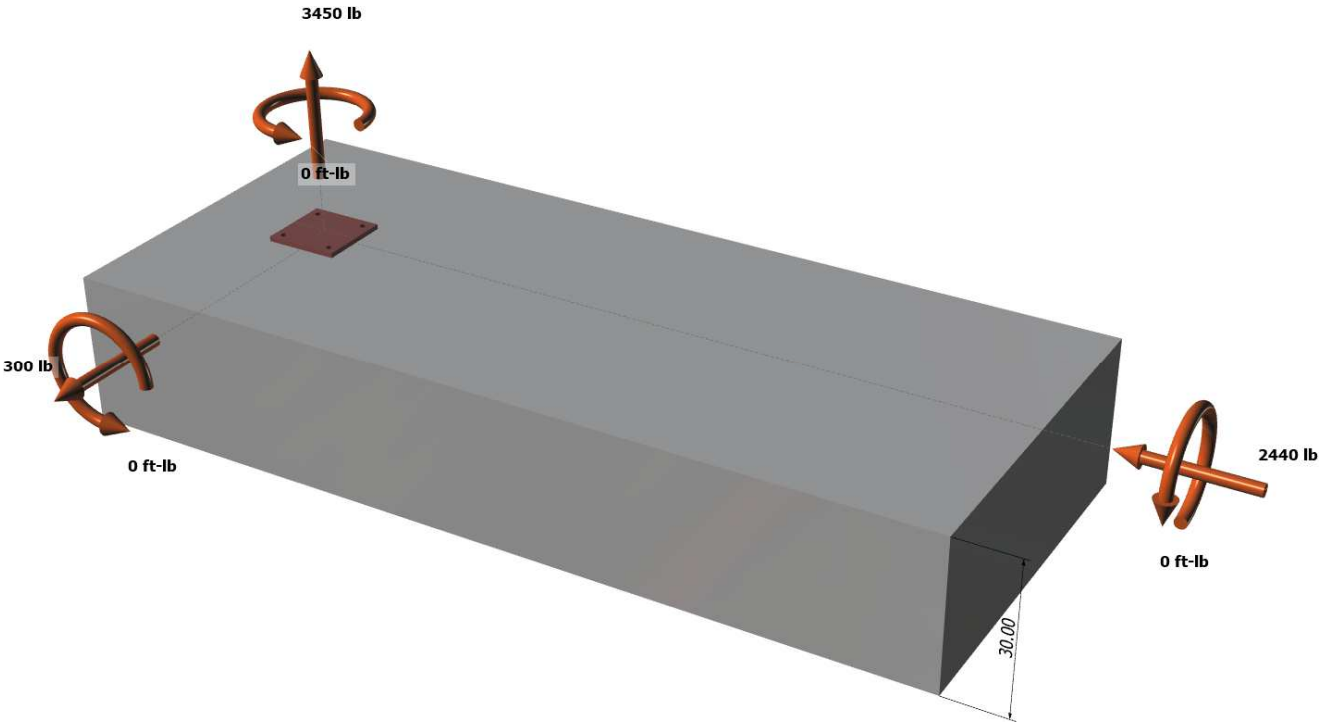

<Figure 2>

3. Resulting Anchor Forces

Anchor	Tension load, N_{ua} (lb)	Shear load x, V_{uax} (lb)	Shear load y, V_{uay} (lb)	Shear load combined, $\sqrt{(V_{uax})^2+(V_{uay})^2}$ (lb)
1	862.5	75.0	-610.0	614.6
2	862.5	75.0	-610.0	614.6
3	862.5	75.0	-610.0	614.6
4	862.5	75.0	-610.0	614.6
Sum	3450.0	300.0	-2440.0	2458.4

Maximum concrete compression strain (‰): 0.00
Maximum concrete compression stress (psi): 0
Resultant tension force (lb): 3450
Resultant compression force (lb): 0
Eccentricity of resultant tension forces in x-axis, e'_{Nx} (inch): 0.00
Eccentricity of resultant tension forces in y-axis, e'_{Ny} (inch): 0.00
Eccentricity of resultant shear forces in x-axis, e'_{Vx} (inch): 0.00
Eccentricity of resultant shear forces in y-axis, e'_{Vy} (inch): 0.00

<Figure 3>

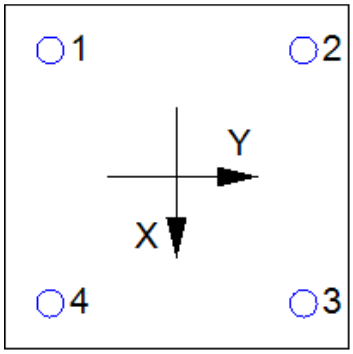

4. Steel Strength of Anchor in Tension (Sec. 17.4.1)

N_{sa} (lb)	ϕ	ϕN_{sa} (lb)
4525	0.75	3394

5. Concrete Breakout Strength of Anchor in Tension (Sec. 17.4.2)

$N_b = k_c \lambda_a \sqrt{f'_c} h_{ef}^{1.5}$ (Eq. 17.4.2.2a)

k_c	λ_a	f'_c (psi)	h_{ef} (in)	N_b (lb)
17.0	1.00	2500	4.000	6800

$\phi N_{cbg} = \phi (A_{Nc} / A_{Nco}) \Psi_{ec,N} \Psi_{ed,N} \Psi_{c,N} \Psi_{cp,N} N_b$ (Sec. 17.3.1 & Eq. 17.4.2.1b)

A_{Nc} (in^2)	A_{Nco} (in^2)	$c_{a,min}$ (in)	$\Psi_{ec,N}$	$\Psi_{ed,N}$	$\Psi_{c,N}$	$\Psi_{cp,N}$	N_b (lb)	ϕ	ϕN_{cbg} (lb)
240.25	144.00	7.25	1.000	1.000	1.00	1.000	6800	0.65	7374

6. Adhesive Strength of Anchor in Tension (Sec. 17.4.5)

$\tau_{k,cr} = \tau_{k,cr} f_{short\text{-}term} K_{sat} (f'_c / 2{,}500)^n$

$\tau_{k,cr}$ (psi)	$f_{short\text{-}term}$	K_{sat}	f'_c (psi)	n	$\tau_{k,cr}$ (psi)
1346	1.00	1.00	2500	0.24	1346

$N_{ba} = \lambda_a \tau_{cr} \pi d_a h_{ef}$ (Eq. 17.4.5.2)

λ_a	τ_{cr} (psi)	d_a (in)	h_{ef} (in)	N_{ba} (lb)
1.00	1346	0.38	4.000	6343

$\phi N_{ag} = \phi (A_{Na} / A_{Na0}) \Psi_{ec,Na} \Psi_{ed,Na} \Psi_{cp,Na} N_{ba}$ (Sec. 17.3.1 & Eq. 17.4.5.1b)

A_{Na} (in^2)	A_{Na0} (in^2)	c_{Na} (in)	$c_{a,min}$ (in)	$\Psi_{ec,Na}$	$\Psi_{ed,Na}$	$\Psi_{cp,Na}$	N_{ba}(lb)	ϕ	ϕN_{ag} (lb)
198.45	112.09	5.29	7.25	1.000	1.000	1.000	6343	0.55	6176

8. Steel Strength of Anchor in Shear (Sec. 17.5.1)

V_{sa} (lb)	ϕ_{grout}	ϕ	$\phi_{grout}\phi V_{sa}$ (lb)
2715	1.0	0.65	1765

9. Concrete Breakout Strength of Anchor in Shear (Sec. 17.5.2)

Shear perpendicular to edge in x-direction:

$V_{bx} = \min|7(l_e / d_a)^{0.2}\sqrt{d_a}\lambda_a\sqrt{f'_c}c_{a1}^{1.5};\ 9\lambda_a\sqrt{f'_c}c_{a1}^{1.5}|$ (Eq. 17.5.2.2a & Eq. 17.5.2.2b)

l_e (in)	d_a (in)	λ_a	f'_c (psi)	c_{a1} (in)	V_{bx} (lb)
3.00	0.375	1.00	2500	13.75	16564

$\phi V_{cbgx} = \phi\,(A_{Vc} / A_{Vco})\Psi_{ec,V}\Psi_{ed,V}\Psi_{c,V}\Psi_{h,V}V_{bx}$ (Sec. 17.3.1 & Eq. 17.5.2.1b)

A_{Vc} (in^2)	A_{Vco} (in^2)	$\Psi_{ec,V}$	$\Psi_{ed,V}$	$\Psi_{c,V}$	$\Psi_{h,V}$	V_{bx} (lb)	ϕ	ϕV_{cbgx} (lb)
647.11	850.78	1.000	0.805	1.000	1.000	16564	0.70	7103

Shear perpendicular to edge in y-direction:

$V_{by} = \min|7(l_e / d_a)^{0.2}\sqrt{d_a}\lambda_a\sqrt{f'_c}c_{a1}^{1.5};\ 9\lambda_a\sqrt{f'_c}c_{a1}^{1.5}|$ (Eq. 17.5.2.2a & Eq. 17.5.2.2b)

l_e (in)	d_a (in)	λ_a	f'_c (psi)	c_{a1} (in)	V_{by} (lb)
3.00	0.375	1.00	2500	10.75	11450

$\phi V_{cbgy} = \phi\,(A_{Vc} / A_{Vco})\Psi_{ec,V}\Psi_{ed,V}\Psi_{c,V}\Psi_{h,V}V_{by}$ (Sec. 17.3.1 & Eq. 17.5.2.1b)

A_{Vc} (in^2)	A_{Vco} (in^2)	$\Psi_{ec,V}$	$\Psi_{ed,V}$	$\Psi_{c,V}$	$\Psi_{h,V}$	V_{by} (lb)	ϕ	ϕV_{cbgy} (lb)
387.00	520.03	1.000	0.891	1.000	1.000	11450	0.70	5313

Shear parallel to edge in x-direction:

$V_{by} = \min|7(l_e / d_a)^{0.2}\sqrt{d_a}\lambda_a\sqrt{f'_c}c_{a1}^{1.5};\ 9\lambda_a\sqrt{f'_c}c_{a1}^{1.5}|$ (Eq. 17.5.2.2a & Eq. 17.5.2.2b)

l_e (in)	d_a (in)	λ_a	f'_c (psi)	c_{a1} (in)	V_{by} (lb)
3.00	0.375	1.00	2500	7.25	6342

$\phi V_{cbgx} = \phi\,(2)(A_{Vc} / A_{Vco})\Psi_{ec,V}\Psi_{ed,V}\Psi_{c,V}\Psi_{h,V}V_{by}$ (Sec. 17.3.1, 17.5.2.1(c) & Eq. 17.5.2.1b)

A_{Vc} (in^2)	A_{Vco} (in^2)	$\Psi_{ec,V}$	$\Psi_{ed,V}$	$\Psi_{c,V}$	$\Psi_{h,V}$	V_{by} (lb)	ϕ	ϕV_{cbgx} (lb)
261.00	236.53	1.000	1.000	1.000	1.000	6342	0.70	9797

Shear parallel to edge in y-direction:

$V_{bx} = \min|7(l_e / d_a)^{0.2}\sqrt{d_a}\lambda_a\sqrt{f'_c}c_{a1}^{1.5};\ 9\lambda_a\sqrt{f'_c}c_{a1}^{1.5}|$ (Eq. 17.5.2.2a & Eq. 17.5.2.2b)

l_e (in)	d_a (in)	λ_a	f'_c (psi)	c_{a1} (in)	V_{bx} (lb)
3.00	0.375	1.00	2500	10.25	10661

$\phi V_{cbgy} = \phi\,(2)(A_{Vc} / A_{Vco})\Psi_{ec,V}\Psi_{ed,V}\Psi_{c,V}\Psi_{h,V}V_{bx}$ (Sec. 17.3.1, 17.5.2.1(c) & Eq. 17.5.2.1b)

A_{Vc} (in^2)	A_{Vco} (in^2)	$\Psi_{ec,V}$	$\Psi_{ed,V}$	$\Psi_{c,V}$	$\Psi_{h,V}$	V_{bx} (lb)	ϕ	ϕV_{cbgy} (lb)
401.67	472.78	1.000	1.000	1.000	1.000	10661	0.70	12680

10. Concrete Pryout Strength of Anchor in Shear (Sec. 17.5.3)

$\phi V_{cpg} = \phi \min|k_{cp}N_{ag}\ ;\ k_{cp}N_{cbg}| = \phi \min|k_{cp}(A_{Na} / A_{Na0})\Psi_{ec,Na}\Psi_{ed,Na}\Psi_{cp,Na}N_{ba}\ ;\ k_{cp}(A_{Nc} / A_{Nco})\Psi_{ec,N}\Psi_{ed,N}\Psi_{c,N}\Psi_{cp,N}N_b|$ (Sec. 17.3.1 & Eq. 17.5.3.1b)

k_{cp}	A_{Na} (in^2)	A_{Na0} (in^2)	$\Psi_{ed,Na}$	$\Psi_{ec,Na}$	$\Psi_{cp,Na}$	N_{ba} (lb)	N_a (lb)
2.0	198.45	112.09	1.000	1.000	1.000	6343	11230

A_{Nc} (in^2)	A_{Nco} (in^2)	$\Psi_{ec,N}$	$\Psi_{ed,N}$	$\Psi_{c,N}$	$\Psi_{cp,N}$	N_b (lb)	N_{cb} (lb)	ϕ
240.25	144.00	1.000	1.000	1.000	1.000	6800	11345	0.70

ϕV_{cpg} (lb)
15722

11. Results

Interaction of Tensile and Shear Forces (Sec. R17.6)

Tension	Factored Load, N_{ua} (lb)	Design Strength, ϕN_n (lb)	Ratio	Status
Steel	863	3394	0.25	Pass
Concrete breakout	3450	7374	0.47	Pass
Adhesive	**3450**	**6176**	**0.56**	**Pass (Governs)**

Shear	Factored Load, V_{ua} (lb)	Design Strength, ϕV_n (lb)	Ratio	Status
Steel	615	1765	0.35	Pass
T Concrete breakout x+	300	7103	0.04	Pass
T Concrete breakout y-	2440	5313	0.46	Pass
|| Concrete breakout y-	150	9797	0.02	Pass
|| Concrete breakout x-	1220	12680	0.10	Pass
Concrete breakout, combined	**-**	**-**	**0.46**	**Pass (Governs)**
Pryout	2458	15722	0.16	Pass

Interaction check	$(N_{ua}/\phi N_{ua})^{5/3}$	$(V_{ua}/\phi V_{ua})^{5/3}$	Combined Ratio	Permissible	Status
Sec. R17.6	0.38	0.28	65.4%	1.0	Pass

SET-3G w/ 3/8"Ø F1554 Gr. 36 with hef = 4.000 inch meets the selected design criteria.

12. Warnings

- Designer must exercise own judgement to determine if this design is suitable.

- Refer to manufacturer's product literature for hole cleaning and installation instructions.

Framing Analysis

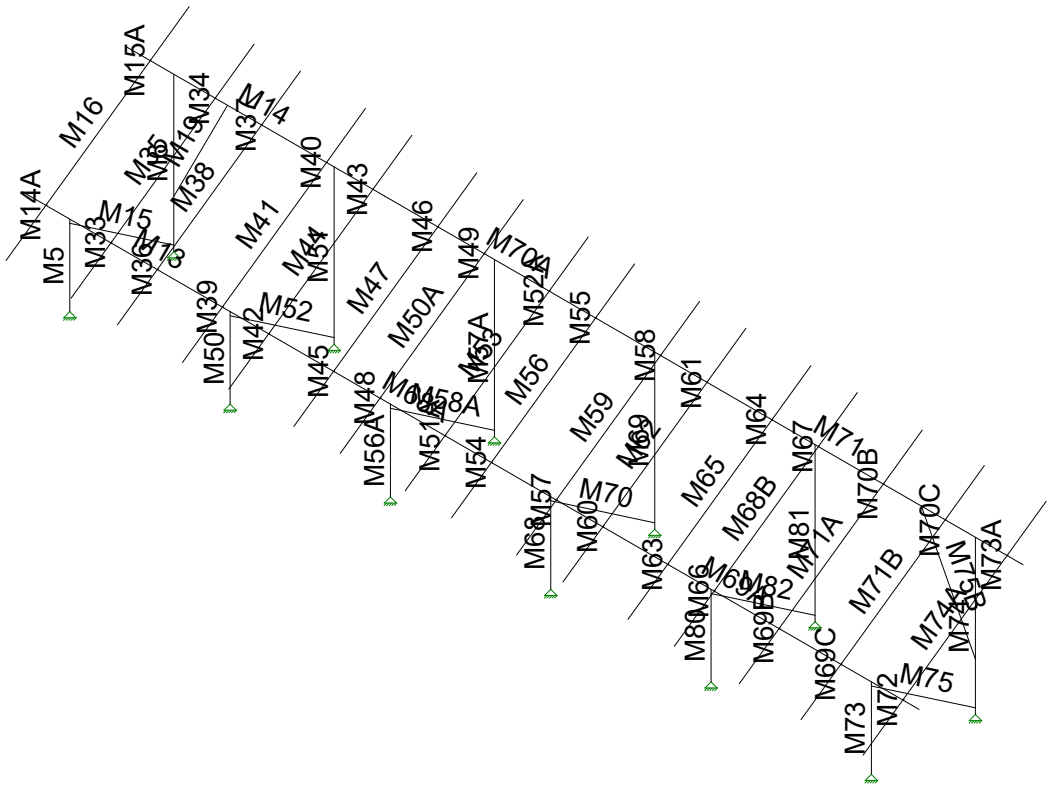

Vector Structural Engineeri...		SK - 6
STB	Ground Mount	Aug 15, 2019 at 2:46 PM
U2716.128.191		Sunmodo Sunturf A4a.r3d

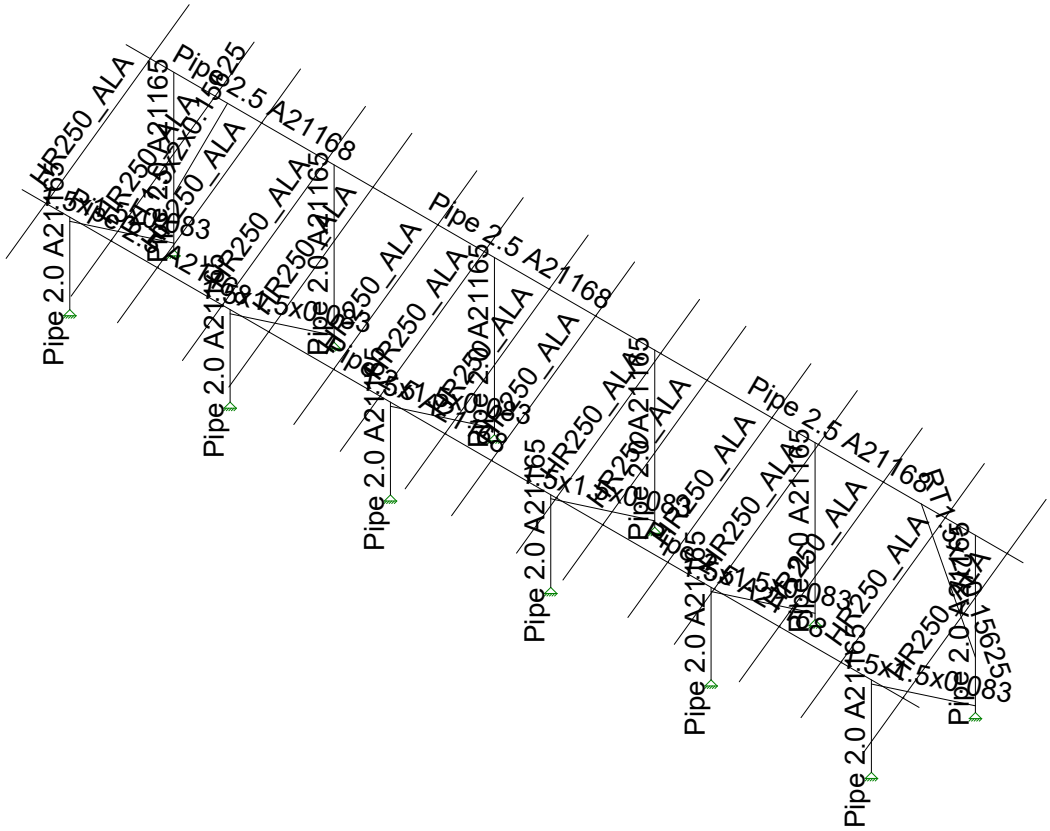

Vector Structural Engineeri...
STB
U2716.128.191

Ground Mount

SK - 7
Aug 15, 2019 at 2:46 PM
Sunmodo Sunturf A4a.r3d

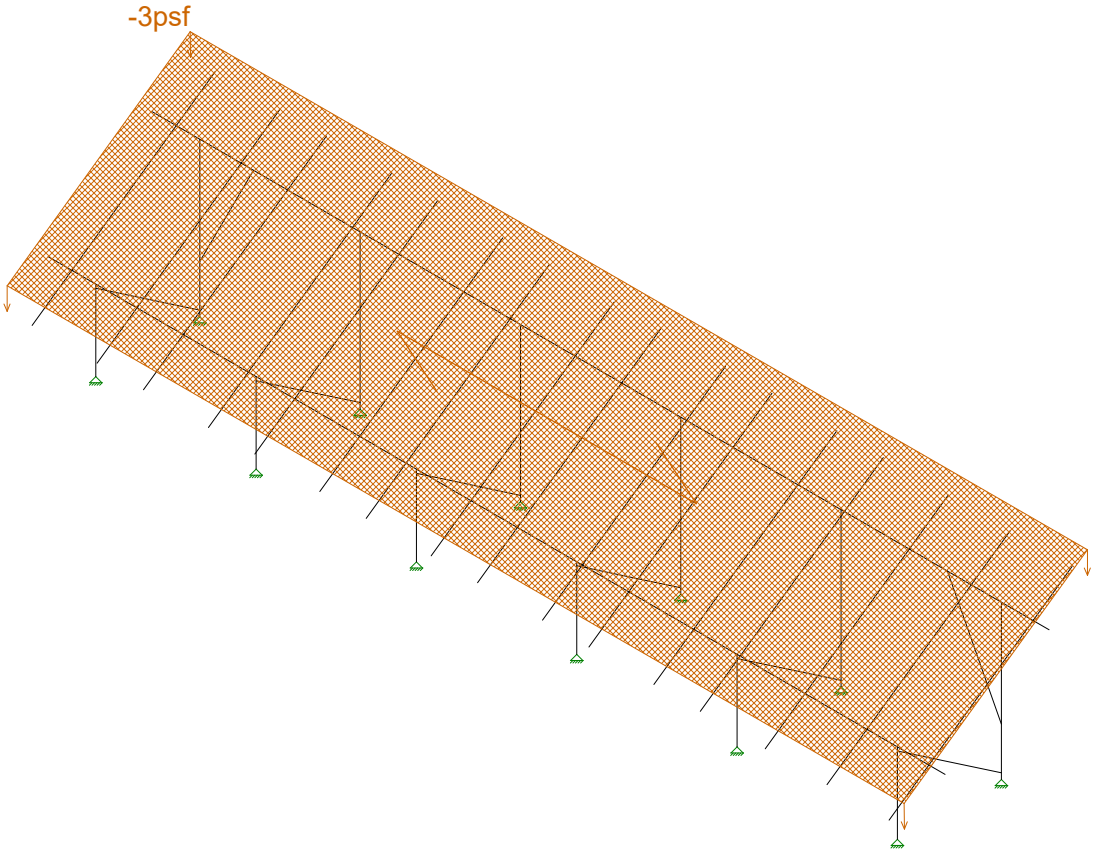

Loads: BLC 2, Solar Panel Weight

Vector Structural Engineeri...		SK - 8
STB	Ground Mount	Aug 15, 2019 at 2:46 PM
U2716.128.191		Sunmodo Sunturf A4a.r3d

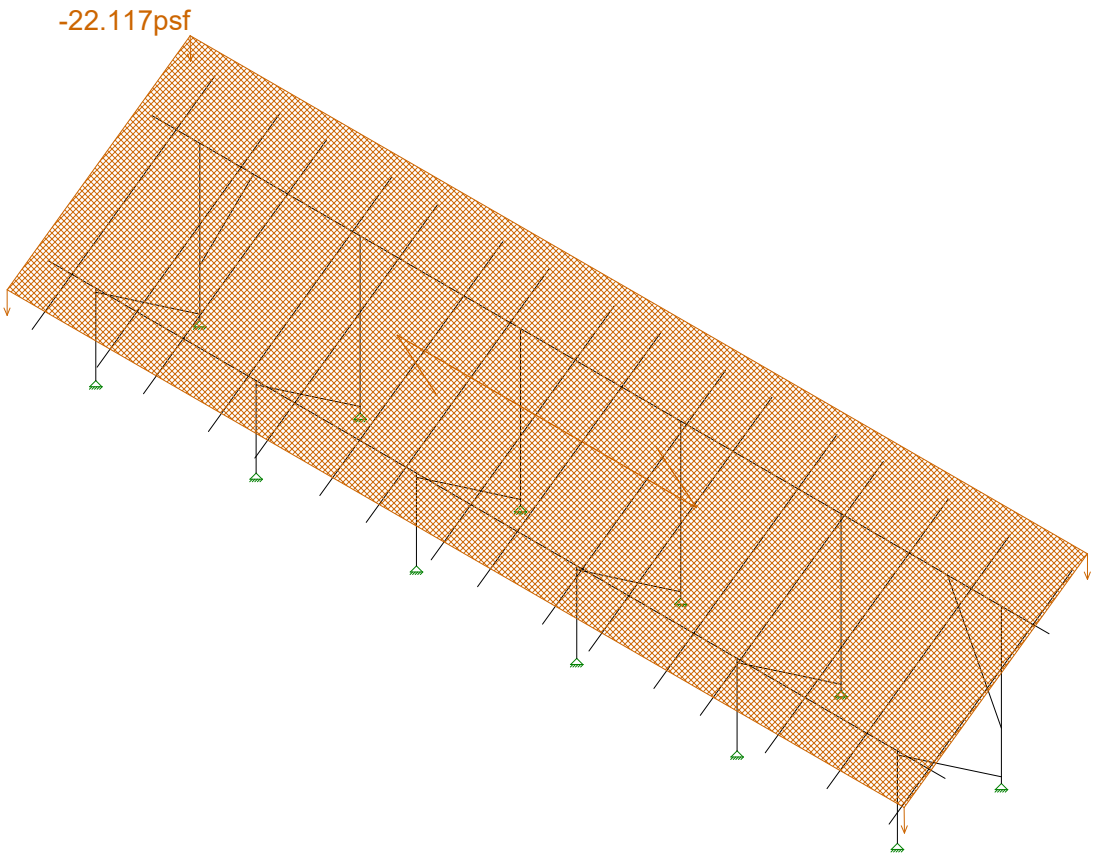

Loads: BLC 3, Roof Live/Snow

Vector Structural Engineeri...		SK - 9
STB	Ground Mount	Aug 15, 2019 at 2:47 PM
U2716.128.191		Sunmodo Sunturf A4a.r3d

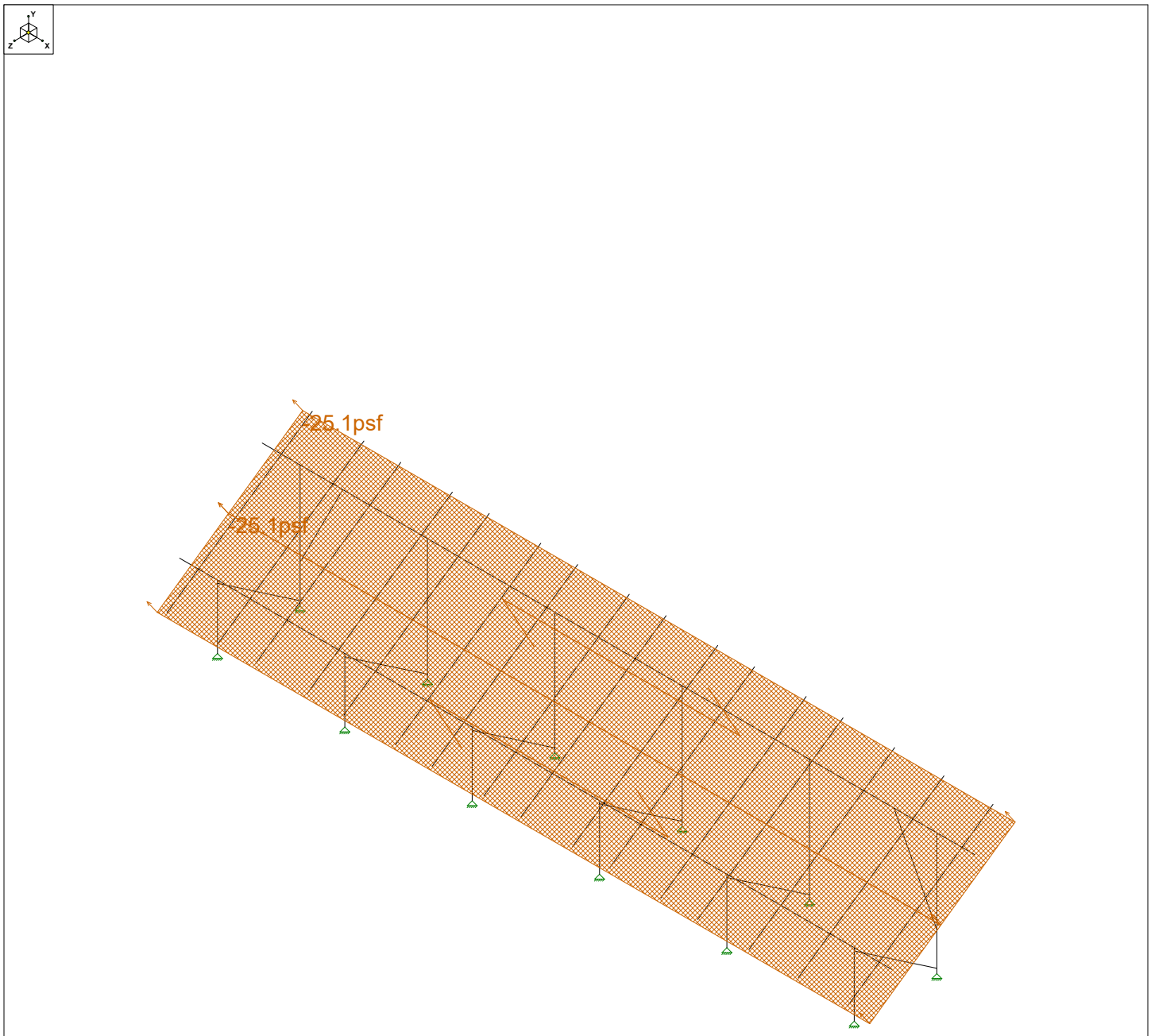

Loads: BLC 4, Wind A 0 deg

Vector Structural Engineeri...		SK - 10
STB	Ground Mount	Aug 15, 2019 at 2:47 PM
U2716.128.191		Sunmodo Sunturf A4a.r3d

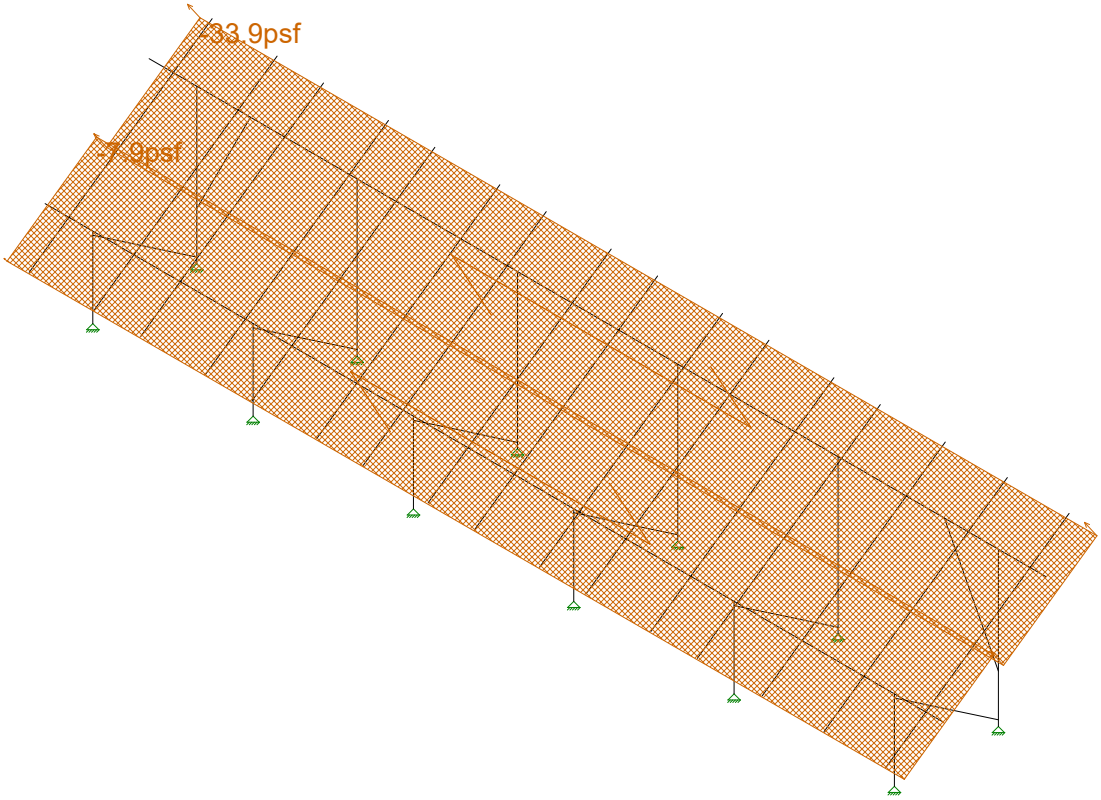

Loads: BLC 5, Wind B 0 deg

Vector Structural Engineeri...		SK - 11
STB	Ground Mount	Aug 15, 2019 at 2:47 PM
U2716.128.191		Sunmodo Sunturf A4a.r3d

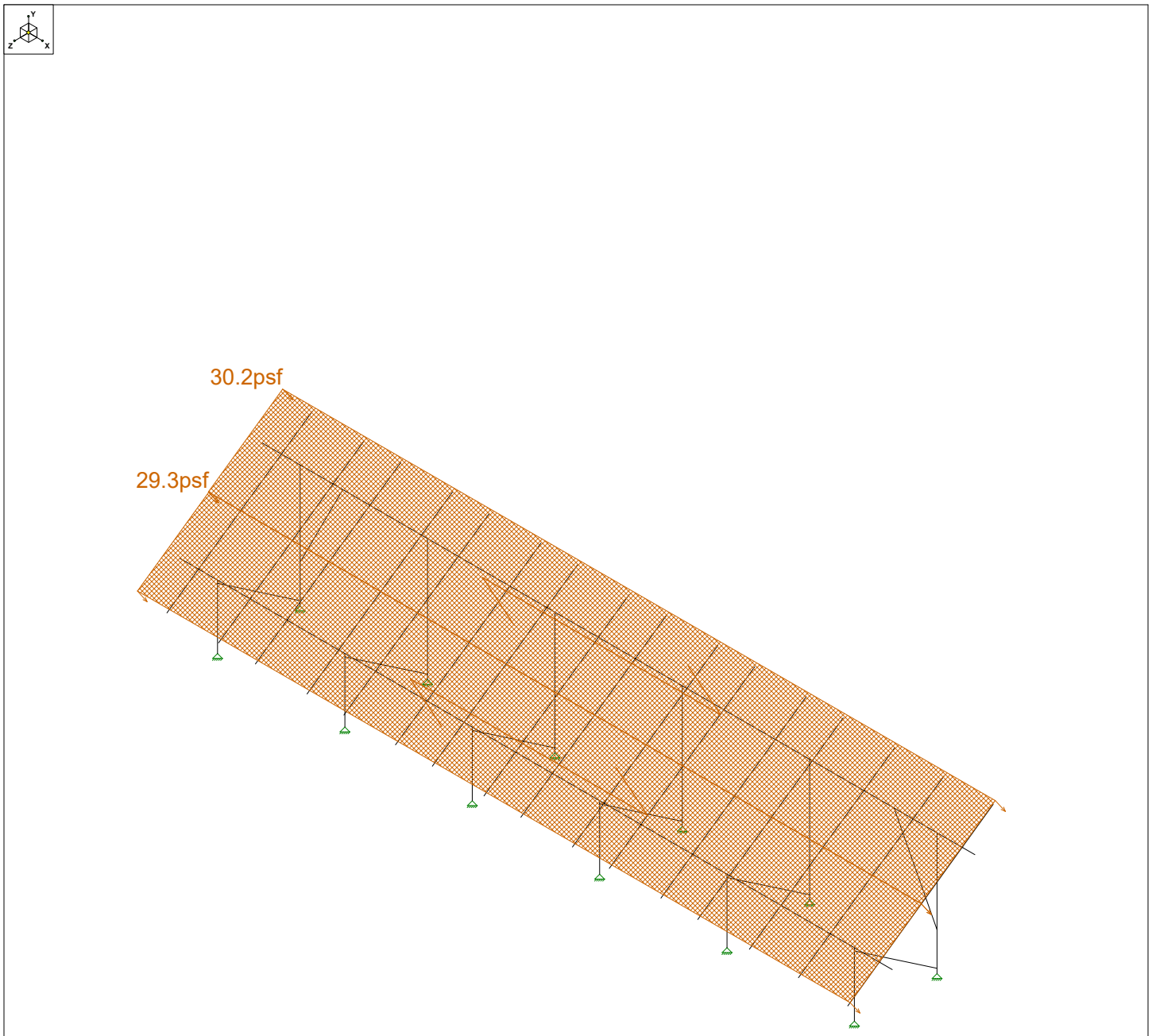

Loads: BLC 6, Wind A 180 deg

Vector Structural Engineeri...		SK - 12
STB	Ground Mount	Aug 15, 2019 at 2:47 PM
U2716.128.191		Sunmodo Sunturf A4a.r3d

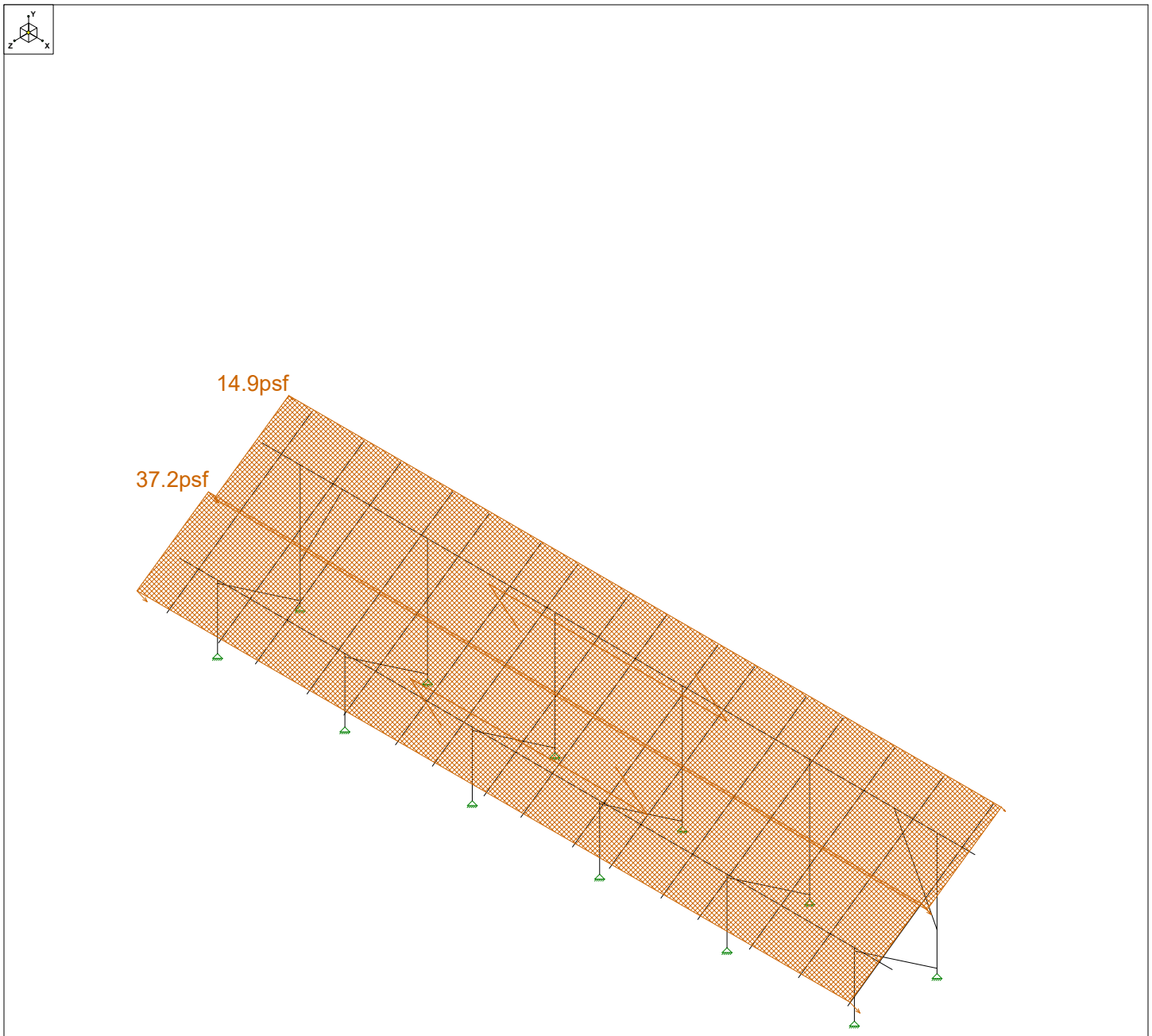

Loads: BLC 7, Wind B 180 deg

Vector Structural Engineeri...		SK - 13
STB	Ground Mount	Aug 15, 2019 at 2:47 PM
U2716.128.191		Sunmodo Sunturf A4a.r3d

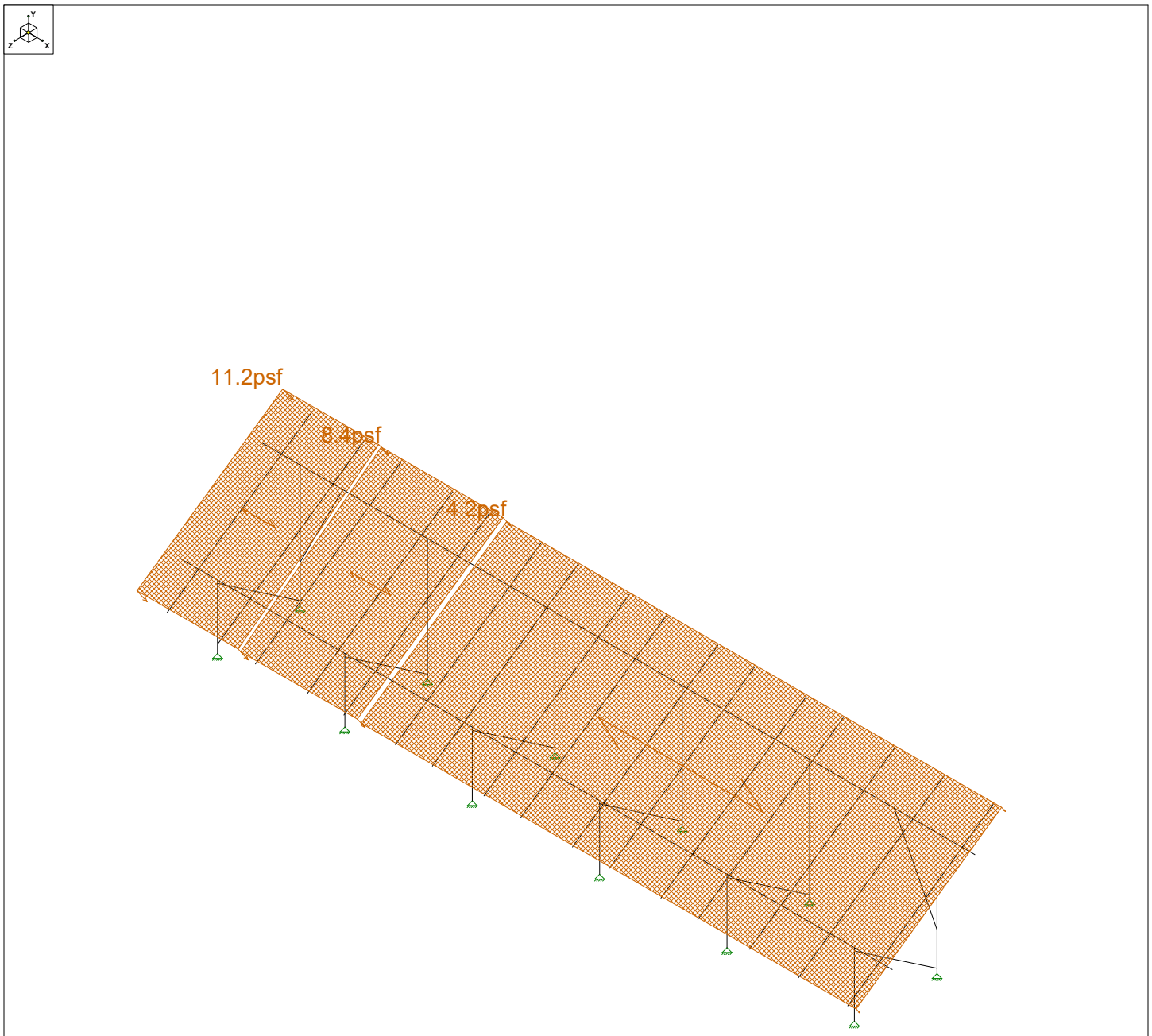

Loads: BLC 8, Wind A 90

Vector Structural Engineeri...		SK - 14
STB	Ground Mount	Aug 15, 2019 at 2:47 PM
U2716.128.191		Sunmodo Sunturf A4a.r3d

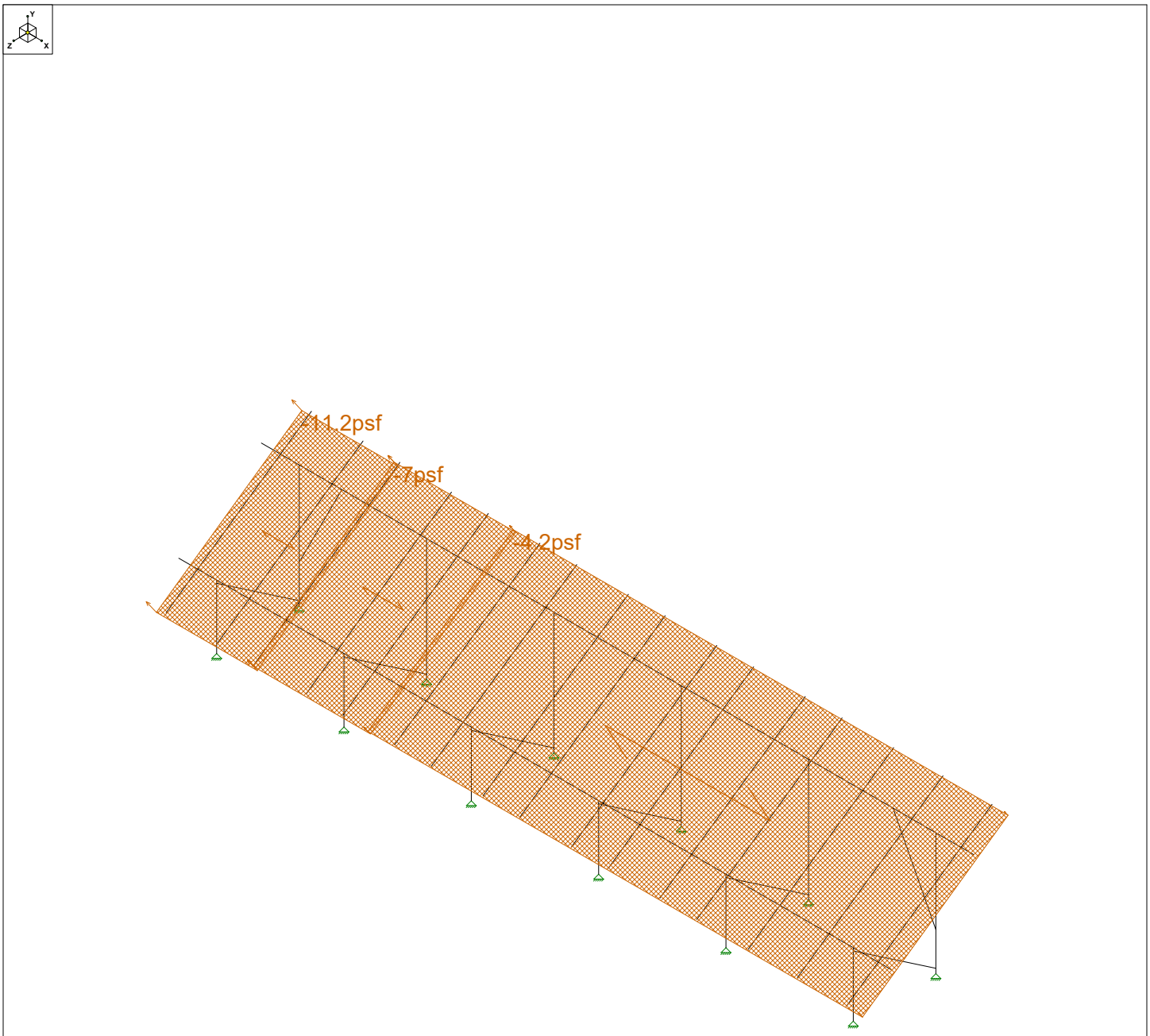

Loads: BLC 9, Wind B 90

Vector Structural Engineeri...		SK - 15
STB	Ground Mount	Aug 15, 2019 at 2:47 PM
U2716.128.191		Sunmodo Sunturf A4a.r3d

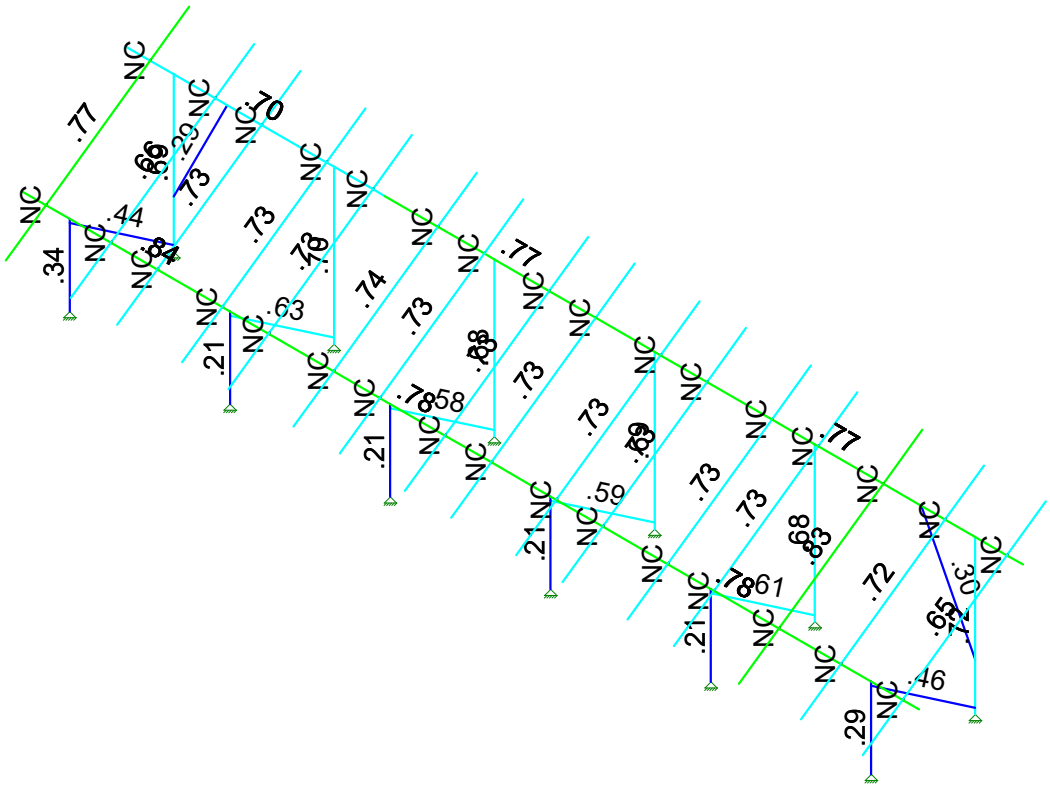

Member Code Checks Displayed (Enveloped)
Envelope Only Solution

Vector Structural Engineeri...		SK - 3
STB	Ground Mount	Aug 15, 2019 at 2:46 PM
U2716.128.191		Sunmodo Sunturf A4a.r3d

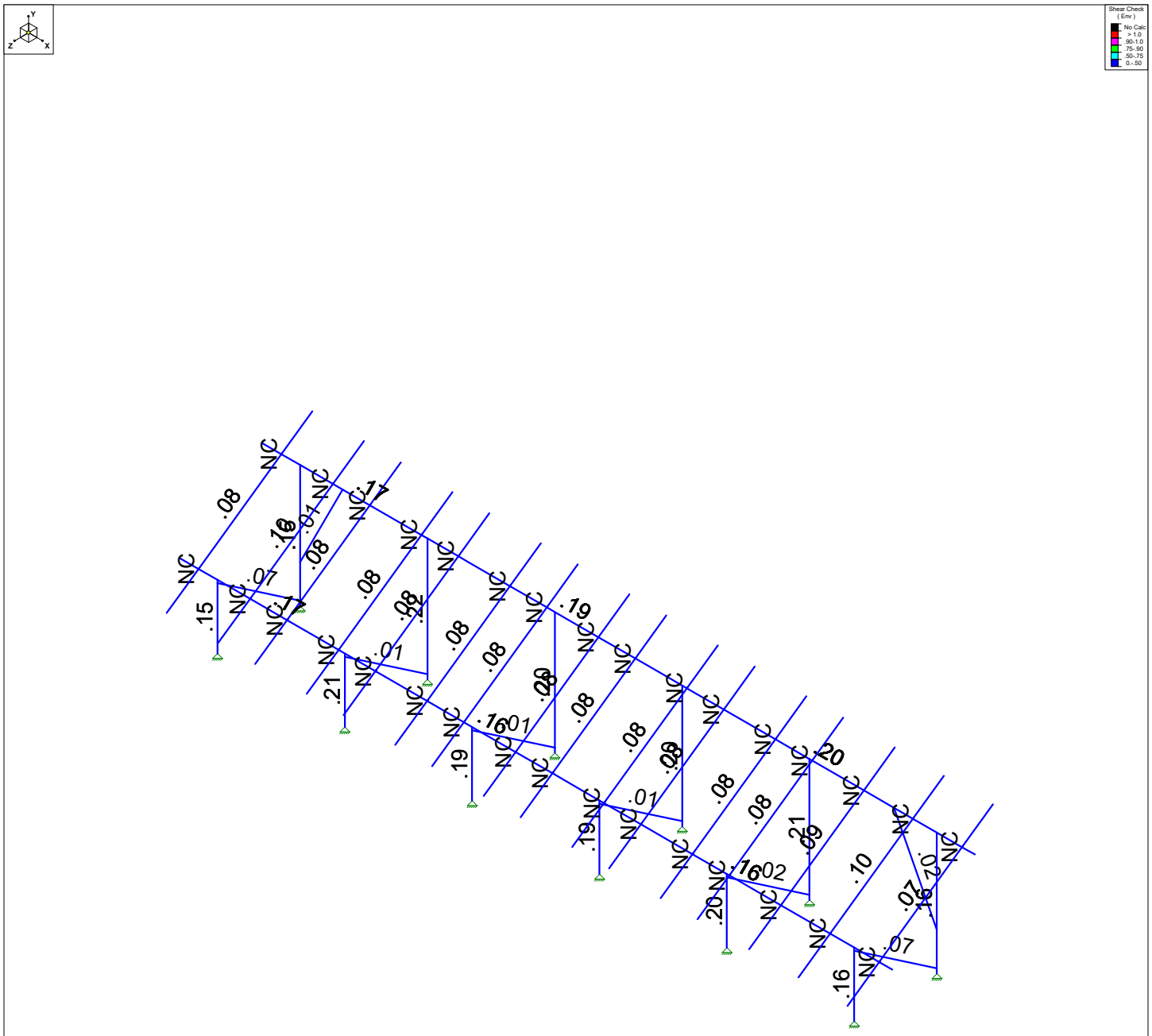

Member Shear Checks Displayed (Enveloped)
Envelope Only Solution

Vector Structural Engineeri...		SK - 5
STB	Ground Mount	Aug 15, 2019 at 2:46 PM
U2716.128.191		Sunmodo Sunturf A4a.r3d

(Global) Model Settings

Display Sections for Member Calcs	5
Max Internal Sections for Member Calcs	97
Include Shear Deformation?	Yes
Increase Nailing Capacity for Wind?	Yes
Include Warping?	Yes
Trans Load Btwn Intersecting Wood Wall?	Yes
Area Load Mesh (in^2)	144
Merge Tolerance (in)	.12
P-Delta Analysis Tolerance	0.50%
Include P-Delta for Walls?	Yes
Automatically Iterate Stiffness for Walls?	Yes
Max Iterations for Wall Stiffness	3
Gravity Acceleration (in/sec^2)	386.4
Wall Mesh Size (in)	24
Eigensolution Convergence Tol. (1.E-)	4
Vertical Axis	Y
Global Member Orientation Plane	XZ
Static Solver	Sparse Accelerated
Dynamic Solver	Accelerated Solver

Hot Rolled Steel Code	AISC 14th(360-10): ASD
Adjust Stiffness?	Yes(Iterative)
RISAConnection Code	AISC 14th(360-10): ASD
Cold Formed Steel Code	AISI S100-16: ASD
Wood Code	AWC NDS-15: ASD
Wood Temperature	< 100F
Concrete Code	ACI 318-14
Masonry Code	ACI 530-13: ASD
Aluminum Code	AA ADM1-15: ASD - Building
	AISC 14th(360-10): ASD

Number of Shear Regions	4
Region Spacing Increment (in)	4
Biaxial Column Method	Exact Integration
Parme Beta Factor (PCA)	.65
Concrete Stress Block	Rectangular
Use Cracked Sections?	Yes
Use Cracked Sections Slab?	No
Bad Framing Warnings?	No
Unused Force Warnings?	Yes
Min 1 Bar Diam. Spacing?	No
Concrete Rebar Set	REBAR_SET_ASTMA615
Min % Steel for Column	1
Max % Steel for Column	8

(Global) Model Settings, Continued

Seismic Code	ASCE 7-10
Seismic Base Elevation (in)	15600
Add Base Weight?	Yes
Ct X	.02
Ct Z	.02
T X (sec)	Not Entered
T Z (sec)	Not Entered
R X	3
R Z	3
Ct Exp. X	.75
Ct Exp. Z	.75
SD1	1
SDS	1
S1	1
TL (sec)	5
Risk Cat	I or II
Drift Cat	Other
Om Z	1
Om X	1
Cd Z	4
Cd X	4
Rho Z	1
Rho X	1

Hot Rolled Steel Properties

	Label	E [ksi]	G [ksi]	Nu	Therm (\1E5 F)	Density[lb/ft^3]	Yield[psi]	Ry	Fu[psi]	Rt
1	A992	29000	11154	.3	.65	490	50000	1.1	65000	1.1
2	A36 Gr.36	29000	11154	.3	.65	490	36000	1.5	58000	1.2
3	A572 Gr.50	29000	11154	.3	.65	490	50000	1.1	65000	1.1
4	A500 Gr.B R...	29000	11154	.3	.65	527	42000	1.4	58000	1.3
5	A500 Gr.B Re...	29000	11154	.3	.65	527	46000	1.4	58000	1.3
6	A53 Gr.B	29000	11154	.3	.65	490	35000	1.6	60000	1.2
7	A1085	29000	11154	.3	.65	490	50000	1.4	65000	1.3

Aluminum Properties

	Label	E [ksi]	G [ksi]	Nu	Therm (...	Density[...	Table B.4	kt	Ftu[psi]	Fty[psi]	Fcy[psi]	Fsu[psi]	Ct
1	3003-H14	10100	3787.5	.33	1.3	172.8	Table B.4-1	1	19000	16000	13000	12000	141
2	6061-T6	10100	3787.5	.33	1.3	172.8	Table B.4-2	1	38000	35000	35000	24000	141
3	6063-T5	10100	3787.5	.33	1.3	172.8	Table B.4-2	1	22000	16000	16000	13000	141
4	6063-T6	10100	3787.5	.33	1.3	172.8	Table B.4-2	1	30000	25000	25000	19000	141
5	5052-H34	10200	3787.5	.33	1.3	172.8	Table B.4-1	1	34000	26000	24000	20000	141
6	6061-T6 W	10100	3787.5	.33	1.3	172.8	Table B.4-1	1	24000	15000	15000	15000	141
7	6005-T5	10100	3787.5	.33	1.3	172.8	Table B.4-1	1	38000	35000	35000	24000	141

Hot Rolled Steel Section Sets

	Label	Shape	Type	Design List	Material	Design R...	A [in2]	Iyy [in4]	Izz [in4]	J [in4]
1	Post	Pipe 2.0 A21165	Column	Pipe	A572 Gr.50	Typical	.776	.499	.499	.998
2	Cross Beam	Pipe 2.5 A21168	Beam	Wide Flange	A572 Gr.50	Typical	.947	.907	.907	1.814
3	Diagonal Brace	1.5x1.5x0.083	HBrace	SquareTube	A572 Gr.50	Typical	.47	.158	.158	.236

Aluminum Section Sets

	Label	Shape	Type	Design List	Material	Design R...	A [in2]	Iyy [in4]	Izz [in4]	J [in4]
1	AL Posts	2.375ODX0.188	Column	Pipe	6005-T5	Typical	1.29	.778	.778	1.54
2	AL Brace	RT1.5x2x0.15625	VBrace	Rectangular Tubes	6005-T5	Typical	.996	.327	.524	.602
3	AL Rails	HR250 ALA	Beam	Rectangular Tubes	6005-T5	Typical	.723	.095	.486	.261
4	AL Cross Beam	Cross Rail	Beam	Rectangular Tubes	6005-T5	Typical	1.909	1.97	4.366	4.017

Member Area Loads (BLC 2 : Solar Panel Weight)

	Joint A	Joint B	Joint C	Joint D	Direction	Distribution	Magnitude[psf]
1	N197	N200	N199	N196	Y	A-B	-3

Member Area Loads (BLC 3 : Roof Live/Snow)

	Joint A	Joint B	Joint C	Joint D	Direction	Distribution	Magnitude[psf]
1	N197	N200	N199	N196	PY	A-B	-27

Member Area Loads (BLC 4 : Wind A 0 deg)

	Joint A	Joint B	Joint C	Joint D	Direction	Distribution	Magnitude[psf]
1	N197	N200	N201	N198	Perp	A-B	-25.1
2	N198	N201	N199	N196	Perp	A-B	-25.1

Member Area Loads (BLC 5 : Wind B 0 deg)

	Joint A	Joint B	Joint C	Joint D	Direction	Distribution	Magnitude[psf]
1	N197	N200	N201	N198	Perp	A-B	-33.9
2	N198	N201	N199	N196	Perp	A-B	-7.9

Member Area Loads (BLC 6 : Wind A 180 deg)

	Joint A	Joint B	Joint C	Joint D	Direction	Distribution	Magnitude[psf]
1	N197	N200	N201	N198	Perp	A-B	30.2
2	N198	N201	N199	N196	Perp	A-B	29.3

Member Area Loads (BLC 7 : Wind B 180 deg)

	Joint A	Joint B	Joint C	Joint D	Direction	Distribution	Magnitude[psf]
1	N197	N200	N201	N198	Perp	A-B	14.9
2	N198	N201	N199	N196	Perp	A-B	37.2

Member Area Loads (BLC 8 : Wind A 90)

	Joint A	Joint B	Joint C	Joint D	Direction	Distribution	Magnitude[psf]
1	N197	N203	N202	N196	Perp	A-B	11.2
2	N203	N209	N208	N202	Perp	A-B	8.4
3	N209	N200	N199	N208	Perp	A-B	4.2

Member Area Loads (BLC 9 : Wind B 90)

	Joint A	Joint B	Joint C	Joint D	Direction	Distribution	Magnitude[psf]
1	N197	N203	N202	N196	Perp	A-B	-11.2
2	N203	N209	N208	N202	Perp	A-B	-7
3	N209	N200	N199	N208	Perp	A-B	-4.2

Basic Load Cases

	BLC Description	Category	X Gravity	Y Gravity	Z Gravity	Joint	Point	Distributed	Area(M...	Surface...
1	Self Weight	DL		-1.05						
2	Solar Panel Weight	DL							1	

Basic Load Cases (Continued)

	BLC Description	Category	X Gravity	Y Gravity	Z Gravity	Joint	Point	Distributed	Area(M...	Surface...
3	Roof Live/Snow	RLL							1	
4	Wind A 0 deg	OL1							2	
5	Wind B 0 deg	OL2							2	
6	Wind A 180 deg	OL3							2	
7	Wind B 180 deg	OL4							2	
8	Wind A 90	OL5							3	
9	Wind B 90	OL6							3	
10	BLC 2 Transient Area ...	None						44		
11	BLC 3 Transient Area ...	None						44		
12	BLC 4 Transient Area ...	None						128		
13	BLC 5 Transient Area ...	None						128		
14	BLC 6 Transient Area ...	None						128		
15	BLC 7 Transient Area ...	None						128		
16	BLC 8 Transient Area ...	None						118		
17	BLC 9 Transient Area ...	None						118		

Load Combinations

	Description	S...	PD..	SRSS	BLC	Fa...	BLC	Fa...	BLC	Fa...	B...	Fa...	B...	Fa...	B...	Fa...	B...	Fa...	B...	Fa...	B...	Fa...	B...	Fa...
1	1.0 D	Yes	Y		DL	1																		
2	1.0 D + 1.0 S	Yes	Y		DL	1	RLL	1																
3	1.0 D + 0.6 W1	Yes	Y		DL	1	RLL		OL1	.6														
4	1.0 D + 0.6 W2	Yes	Y		DL	1	RLL		OL2	.6														
5	1.0 D + 0.6 W3	Yes	Y		DL	1	RLL		OL3	.6														
6	1.0 D + 0.6 W4	Yes	Y		DL	1	RLL		OL4	.6														
7	1.0 D + 0.6 W5	Yes	Y		DL	1	RLL		OL5	.6														
8	1.0 D + 0.6 W6	Yes	Y		DL	1	RLL		OL6	.6														
9	1.0 D + 0.45 W1 + 0....	Yes	Y		DL	1	RLL	.75	OL1	.45														
10	1.0 D + 0.45 W2 + 0....	Yes	Y		DL	1	RLL	.75	OL2	.45														
11	1.0 D + 0.45 W3 + 0....	Yes	Y		DL	1	RLL	.75	OL3	.45														
12	1.0 D + 0.45 W4 + 0....	Yes	Y		DL	1	RLL	.75	OL4	.45														
13	1.0 D + 0.45 W5 + 0....	Yes	Y		DL	1	RLL	.75	OL5	.45														
14	1.0 D + 0.45 W6 + 0....	Yes	Y		DL	1	RLL	.75	OL6	.45														
15	0.6 D + 0.6 W1	Yes	Y		DL	.6	RLL		OL1	.6														
16	0.6 D + 0.6 W2	Yes	Y		DL	.6	RLL		OL2	.6														
17	0.6 D + 0.6 W3	Yes	Y		DL	.6	RLL		OL3	.6														
18	0.6 D + 0.6 W4	Yes	Y		DL	.6	RLL		OL4	.6														
19	0.6 D + 0.6 W5	Yes	Y		DL	.6	RLL		OL5	.6														
20	0.6 D + 0.6 W6	Yes	Y		DL	.6	RLL		OL6	.6														

Envelope Joint Reactions

	Joint		X [lb]	LC	Y [lb]	LC	Z [lb]	LC	MX [lb-ft]	LC	MY [lb-ft]	LC	MZ [lb-ft]	LC
1	N2	max	78.749	12	1489.901	10	43.563	3	0	1	0	1	0	1
2		min	-25.344	15	-230.077	17	-50.951	5	0	1	0	1	0	1
3	N1	max	180.63	11	2473.949	11	1000.7...	5	0	1	0	1	0	1
4		min	-91.092	16	-1577.787	16	-844.316	3	0	1	0	1	0	1
5	N132	max	8.107	16	2954.798	11	1394.0...	5	0	1	0	1	0	1
6		min	-6.417	11	-1985.985	16	-1177....	3	0	1	0	1	0	1
7	N133	max	7.65	10	2067.511	10	53.205	3	0	1	0	1	0	1
8		min	-7.738	17	-403.138	17	-61.286	5	0	1	0	1	0	1
9	N109	max	6.325	11	3051.15	11	1452.2...	5	0	1	0	1	0	1
10		min	-2.004	19	-2064.157	16	-1227.02	3	0	1	0	1	0	1
11	N110A	max	5.061	20	2115.407	10	54.325	3	0	1	0	1	0	1
12		min	-16.98	12	-444.263	17	-62.243	5	0	1	0	1	0	1
13	N121	max	6.561	16	3066.837	11	1326.3...	5	0	1	0	1	0	1

Envelope Joint Reactions (Continued)

	Joint		X [lb]	LC	Y [lb]	LC	Z [lb]	LC	MX [lb-ft]	LC	MY [lb-ft]	LC	MZ [lb-ft]	LC
14		min	-3.453	13	-2025.287	16	-1120....	3	0	1	0	1	0	1
15	N122	max	-.369	20	1976.181	10	53.578	3	0	1	0	1	0	1
16		min	-5.828	12	-360.82	17	-61.963	5	0	1	0	1	0	1
17	N133B	max	7.019	11	3098.368	11	1346.83	5	0	1	0	1	0	1
18		min	-.595	19	-2053.685	16	-1137....	3	0	1	0	1	0	1
19	N134B	max	4.998	10	1994.633	10	53.81	3	0	1	0	1	0	1
20		min	-5.873	17	-378.531	17	-62.103	5	0	1	0	1	0	1
21	N151	max	81.014	16	2569.492	11	1045.8...	5	0	1	0	1	0	1
22		min	-173.437	11	-1653.551	16	-882.598	3	0	1	0	1	0	1
23	N152	max	11.529	15	1533.959	10	44.622	3	0	1	0	1	0	1
24		min	-60.549	12	-274.136	17	-51.894	5	0	1	0	1	0	1
25	Totals:	max	.323	11	22406.625	11	7215.7...	17						
26		min	-.132	16	-6897.894	15	-6085....	15						

Envelope AISC 14th(360-10): ASD Steel Code Checks

	Member	Shape	Code Check	Loc[in]	LC	Shear ...	Loc[in]	Dir	LC	Pnc/om [...	Pnt/om [lb]	Mnyy/om...	Mnzz/om...	Cb	Eqn
1	M5	Pipe 2.0 A2...	.337	54.657	12	.153	54.657		5	16052.041	23232.186	1397.505	1397.505	1....	H1-1b
2	M6	Pipe 2.0 A2...	.692	32.973	11	.153	0		5	6297.608	23232.186	1397.505	1397.505	1....	H1-1a
3	M13	Pipe 2.5 A2...	.844	147....	12	.165	147....		12	11641.036	28358.413	2081.747	2081.747	1....	H1-1b
4	M14	Pipe 2.5 A2...	.696	147....	11	.168	147....		11	11641.036	28358.413	2081.747	2081.747	1....	H1-1b
5	M15	1.5x1.5x0.083	.440	46.656	5	.070	0	y	11	2958.959	14085.15	624.421	624.421	1....	H1-1a
6	M80	Pipe 2.0 A2...	.211	54.657	5	.204	54.657		5	16052.041	23232.186	1397.505	1397.505	1....	H1-1b
7	M81	Pipe 2.0 A2...	.677	3.411	5	.212	0		5	6297.608	23232.186	1397.505	1397.505	1....	H1-1a
8	M82	1.5x1.5x0.083	.608	46.656	5	.019	0	y	11	2958.959	14085.15	624.421	624.421	1....	H1-1a
9	M50	Pipe 2.0 A2...	.215	54.063	17	.210	54.657		5	16052.041	23232.186	1397.505	1397.505	1....	H1-1b
10	M51	Pipe 2.0 A2...	.705	3.411	5	.221	0		5	6297.608	23232.186	1397.505	1397.505	1....	H1-1a
11	M52	1.5x1.5x0.083	.634	46.656	5	.006	0	y	14	2958.959	14085.15	624.421	624.421	1....	H1-1a
12	M56A	Pipe 2.0 A2...	.211	54.657	5	.191	54.657		5	16052.041	23232.186	1397.505	1397.505	1....	H1-1b
13	M57A	Pipe 2.0 A2...	.680	3.411	11	.202	0		5	6297.608	23232.186	1397.505	1397.505	1....	H1-1a
14	M58A	1.5x1.5x0.083	.579	46.656	5	.010	0	y	13	2958.959	14085.15	624.421	624.421	1....	H1-1a
15	M68	Pipe 2.0 A2...	.212	54.657	5	.195	54.657		5	16052.041	23232.186	1397.505	1397.505	1....	H1-1b
16	M69	Pipe 2.0 A2...	.688	3.411	11	.205	0		5	6297.608	23232.186	1397.505	1397.505	1....	H1-1a
17	M70	1.5x1.5x0.083	.588	46.656	5	.007	0	y	10	2958.959	14085.15	624.421	624.421	1....	H1-1a
18	M68A	Pipe 2.5 A2...	.781	78.75	12	.158	76.875		12	11641.036	28358.413	2081.747	2081.747	1....	H1-1b
19	M69A	Pipe 2.5 A2...	.781	125....	12	.164	128....		12	11641.036	28358.413	2081.747	2081.747	1....	H1-1b
20	M70A	Pipe 2.5 A2...	.770	78.75	11	.194	76.875		11	11641.036	28358.413	2081.747	2081.747	1....	H1-1b
21	M71	Pipe 2.5 A2...	.767	11.417	11	.201	14.271		11	11641.036	28358.413	2081.747	2081.747	2....	H1-1b
22	M73	Pipe 2.0 A2...	.289	54.657	12	.157	54.657		5	16052.041	23232.186	1397.505	1397.505	1....	H1-1b
23	M74	Pipe 2.0 A2...	.716	32.973	11	.160	0		5	6297.608	23232.186	1397.505	1397.505	1....	H1-1a
24	M75	1.5x1.5x0.083	.460	46.656	5	.069	0	y	11	2958.959	14085.15	624.421	624.421	1....	H1-1a

Envelope AA ADM1-15: ASD - Building Aluminum Code Checks

	Member	Shape	Code C...	Loc[in]	LC	Shear ...	Loc[in]	Dir	LC	Pnc/O...	Pnt/Om...	Mny/O...	Mnz/O...	Vny/O...	Vnz/O...	Cb	Eqn
1	M19	RT1.5x2x...	.293	51.823	11	.015	0	z	11	2361.808	19411....	770.742	927.083	6090.199	4101.563	1....	H.1-1
2	M16	HR250_A...	.775	34.788	12	.081	36.444	y	12	2598.605	14089....	309.506	624.233	5108.727	1672.364	1	H.1-1
3	M35	HR250_A...	.661	81.171	11	.096	36.444	y	12	2598.605	14089....	309.506	624.233	5108.727	1672.364	1	H.1-1
4	M38	HR250_A...	.729	34.788	12	.082	36.444	y	12	2598.605	14089....	309.506	624.233	5108.727	1672.364	1	H.1-1
5	M41	HR250_A...	.731	34.788	12	.082	36.444	y	12	2598.605	14089....	309.506	624.233	5108.727	1672.364	1	H.1-1
6	M44	HR250_A...	.731	34.788	12	.078	36.444	y	12	2598.605	14089....	309.506	624.233	5108.727	1672.364	1	H.1-1
7	M47	HR250_A...	.741	36.444	12	.077	36.444	y	12	2598.605	14089....	309.506	624.233	5108.727	1672.364	1	H.1-1
8	M50A	HR250_A...	.732	34.788	12	.075	36.444	y	12	2598.605	14089....	309.506	624.233	5108.727	1672.364	1	H.1-1
9	M53	HR250_A...	.731	34.788	12	.079	36.444	y	12	2598.605	14089....	309.506	624.233	5108.727	1672.364	1	H.1-1
10	M56	HR250_A...	.730	34.788	12	.078	36.444	y	12	2598.605	14089....	309.506	624.233	5108.727	1672.364	1	H.1-1
11	M59	HR250_A...	.732	34.788	12	.075	36.444	y	12	2598.605	14089....	309.506	624.233	5108.727	1672.364	1	H.1-1

Envelope AA ADM1-15: ASD - Building Aluminum Code Checks (Continued)

	Member	Shape	Code C...	Loc[in]	LC	Shear ...	Loc[in]	Dir	LC	Pnc/O...	Pnt/Om...	Mny/O...	Mnz/O...	Vny/O...	Vnz/O...	Cb	Eqn
12	M62	HR250_A...	.733	36.444	12	.077	36.444	y	12	2598.605	14089....	309.506	624.233	5108.727	1672.364	1	H.1-1
13	M65	HR250_A...	.731	34.788	12	.078	36.444	y	12	2598.605	14089....	309.506	624.233	5108.727	1672.364	1	H.1-1
14	M68B	HR250_A...	.732	34.788	12	.081	36.444	y	12	2598.605	14089....	309.506	624.233	5108.727	1672.364	1	H.1-1
15	M71A	HR250_A...	.831	34.788	12	.093	36.444	y	12	2598.605	14089....	309.506	624.233	5108.727	1672.364	1	H.1-1
16	M75B	RT1.5x2x...	.301	51.892	11	.024	0	z	5	2355.472	19411....	770.742	927.083	6090.199	4101.563	1....	H.1-1
17	M71B	HR250_A...	.722	34.788	12	.100	36.444	y	12	2598.605	14089....	309.506	624.233	5108.727	1672.364	1	H.1-1
18	M74A	HR250_A...	.646	34.788	12	.068	124.2...	y	11	2598.605	14089....	309.506	624.233	5108.727	1672.364	1	H.1-1

REVISIONS			
REV	DESCRIPTION	BY	DATE
A	INITIAL RELEASE	LWF	10/20/2016

NOTES: UNLESS OTHERWISE SPECIFIED

1. DIMENSIONS SHOWN ARE INCHES [MILIMETERS].

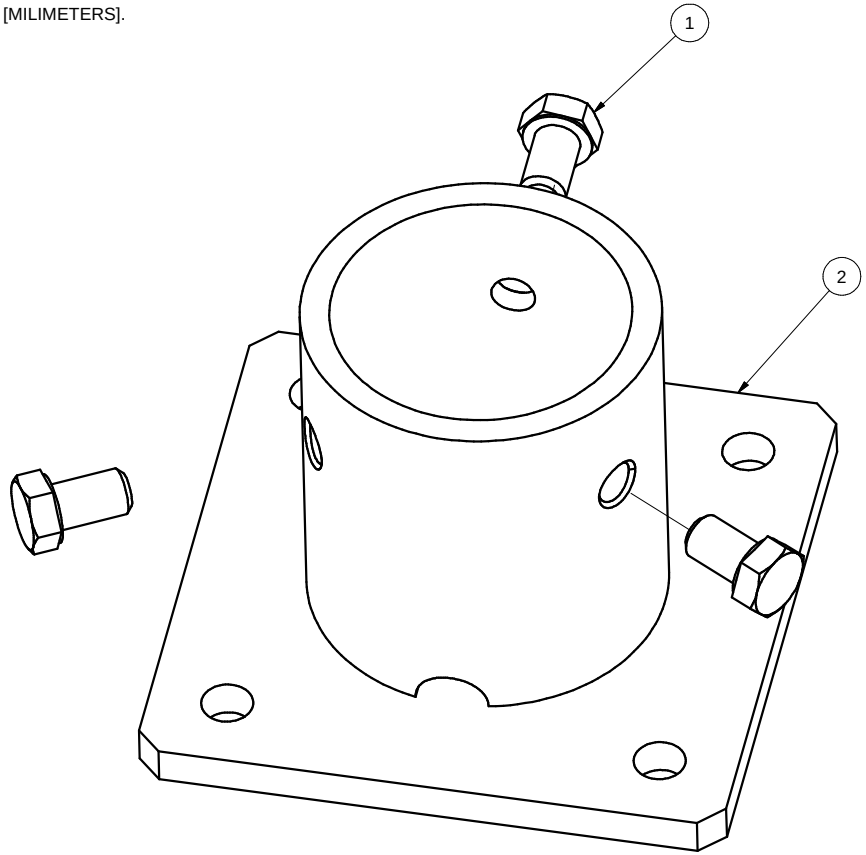

ITEM	PART NUMBER	DESCRIPTION	QTY
2	A21120-001	2" PIPE BASE	1
1	B15018-011	HEX CAP SCREW 3/8-16 X 5/8	3

MATERIAL: SEE NOTES

Third Angle Projection:

GENERAL SPECIFICATIONS
All Dimensions in inches [millimeters]
Tolerances
X.XXX ±0.01 [0.25mm]
X.XX ±0.02 [0.50mm]
X.X ±0.039 [1.0mm]
Unless otherwise spec'd

Break all sharp edges .010-.020 unless otherwise specified.

DRAWN BY: LWF
DATE: 10/20/2016
CHECKED BY:
APPROVALS:

Sunmodo Corp.

1905 E 5TH STREET, STE A, VANCOUVER, WA 98661

TITLE: 2" PIPE BASE KIT

B — DRAWING NUMBER: K10268-001

SCALE: NONE — SHEET 1 of 1

NOTES: UNLESS OTHERWISE SPECIFIED

1. DIMENSIONS SHOWN ARE INCHES [MILIMETERS].
2. MATERAIL: ALUMINUM 6005-T5.
   FINISH: CLEAR ANODIZED 10 µm THICK.
3. THE UNSPECIFIED DIMENSIONS ARE SPECIFIED BY 2D CAD FILE.

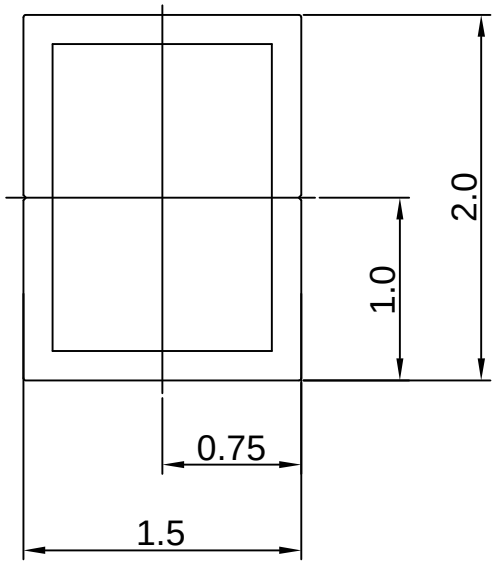

Section properties:

Weight: 1.156 lbs/ft
Area: 0.992 in^2
Perimeter: 12.601 in
Bounding Box: X: -1.000,1.000
Y: -0.750, 0.750
Centroid:(0.000,0.000)
Moments of Inertia(in^4): Ix=0.506,Iy=0.322
Section modulus in bending(in^3): Wx=0.675,Wy=0.322
Radii of Gyration: X: 0.714, Y: 0.570

MATERIAL SEE NOTES		**Sunmodo Corp.**
Third Angle Projection:		1905 E 5TH STREET, SUITE A, VANCOUVER, WA 98661
GENERAL SPECIFICATIONS All Dimensions in inches [millimeters] Tolerances X.XXX ± 0.01 [0.25mm] X.XX ± 0.02 [0.50mm] X.X ± 0.039 [1.0mm] Unless otherwise spec'd	Break all sharp edges .010-.020 unless otherwise specified.	TITLE 1.5X2 AL TUBE BRACE EXTRUSION
DRAWN BY zcg	DATE 03/12/2014	B — DRAWING NUMBER A20164
CHECKED BY		
APPROVALS		SCALE: NONE — SHEET 1 of 1

REVISIONS			
REV	DESCRIPTON	BY	DATE
A	ADDED BOTTOM CHANNEL & CHANGED ONE 3/8 CHANNEL TO 1/4	zcg	02/21/2013

NOTES: UNLESS OTHERWISE SPECIFIED

1. DIMENSIONS SHOWN ARE INCHES [MILIMETERS].
2. MATERAIL: ALUMINUM 6005-T5.
   FINISH: CLEAR ANODIZED 15 µm THICK.
3. THE UNSPECIFIED DIMENSIONS ARE SPECIFIED BY 2D CAD FILE.

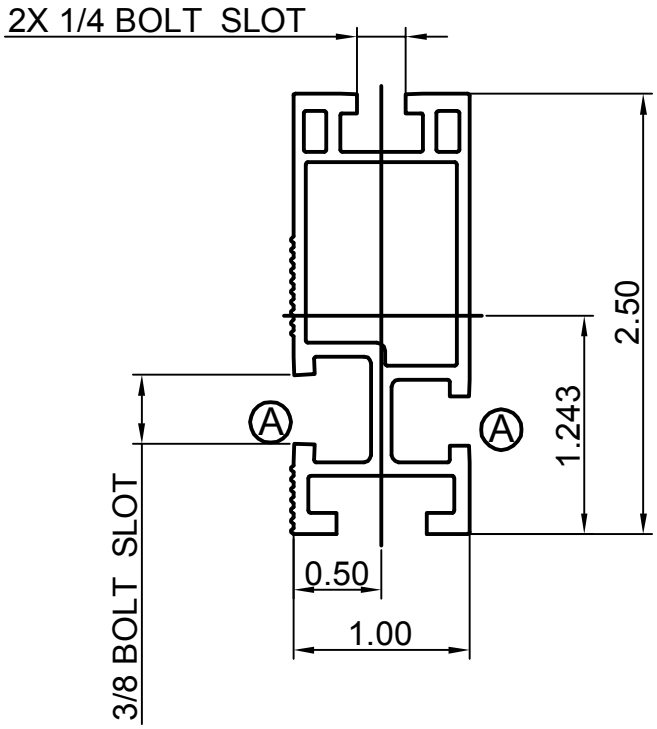

Section properties:

Weight: 0.850 lbs/ft
Area: 0.723 in^2
Perimeter: 17.325 in
Bounding Box: X: -0.500,0.500
Y: -1.243,1.257
Centroid:(0.000,0.000)
Moments of Incertia(in^4): Ix=0.486,Iy=0.095
Section modulus in bending(in^3): Wx=0.387,Wy=0.190
Radii of Gyration: X: 0.820, Y: 0.363

MATERIAL SEE NOTES	**Sunmodo Corp.**	
Third Angle Projection:	1905 E 5TH STREET, SUITE A, VANCOUVER, WA 98661	
GENERAL SPECIFICATIONS All Dimensions in inches [millimeters] Tolerances X.XXX ± 0.01 [0.25mm] X.XX ± 0.02 [0.50mm] X.X ± 0.039 [1.0mm] Unless otherwise spec'd — Break all sharp edges .010-.020 unless otherwise specified.	TITLE HELIO STANDARD RAIL	
DRAWN BY zcg — DATE 02/21/2013	B — DRAWING NUMBER A20144	
CHECKED BY		
APPROVALS	SCALE: NONE	SHEET 1 of 1

NOTES: UNLESS OTHERWISE SPECIFIED

1. DIMENSIONS SHOWN ARE INCHES [MILIMETERS].
2. MATERIAL: 6005-T5.
   FINISH: CLEAR ANODIZED 10um THICK.
3. THE UNSPECIFIED RADII ARE .02" MAX.
4. THE UNSPECIFIED DIMENSIONS ARE SPECIFIED BY 2D CAD FILE.

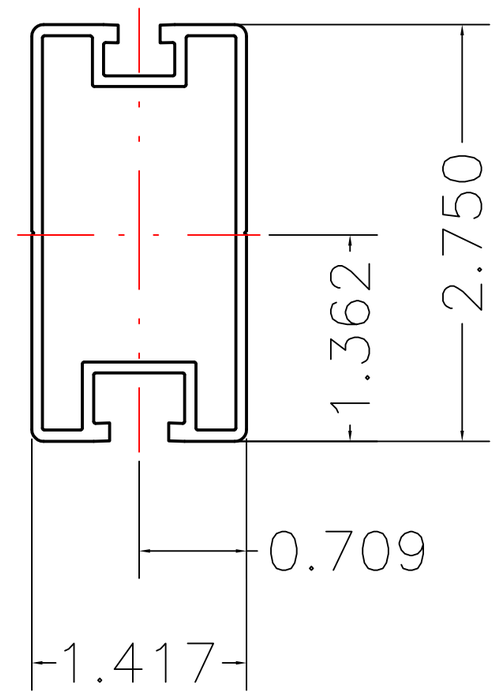

Section properties:

Weight: 0.862 lbs/ft
Area: 0.736 in^2
Perimeter: 19.824 in
Bounding Box: X: -0.709,0.709
Y: -1.362,1.388
Centroid:(0.000,0.000)
Moments of Incertia(in^4): Ix=0.727,Iy=0.214
Section modulus in bending(in^3): Wx=0.524,Wy=0.302
Radii of Gyration: X: 994, Y: 0.539

MATERIAL	SEE NOTES
Third Angle Projection:	
GENERAL SPECIFICATIONS All Dimensions in Inches [millimeters] Tolerances X.XXX ±0.01 [0.25mm] X.XX ±0.02 [0.50mm] X.X ±0.039 [1.0mm] Unless otherwise spec'd	Break all sharp edges .010-.020 unless otherwise specified.
DRAWN BY KYY	DATE 01/18/2018
CHECKED BY	
APPROVALS	

SunModo Corp.
14800 NE 65TH STREET, VANCOUVER WA 98682

TITLE: RAIL, HR300 (SUNRAY), EXTRUSION

B | DRAWING NUMBER A20288

SCALE: NONE | SHEET 1 of 1

REV	DESCRIPTON	BY	DATE
A	0.44 WAS 0.41, 0.44 WAS 0.33	LWF	11/30/2015

NOTES: UNLESS OTHERWISE SPECIFIED

1. DIMENSIONS SHOWN ARE INCHES [MILIMETERS].
2. MATERAIL: ALUMINUM 6005-T5.
   FINISH: CLEAR ANODIZED 15 µm THICK.
3. THE UNSPECIFIED DIMENSIONS ARE SPECIFIED BY 2D CAD FILE.

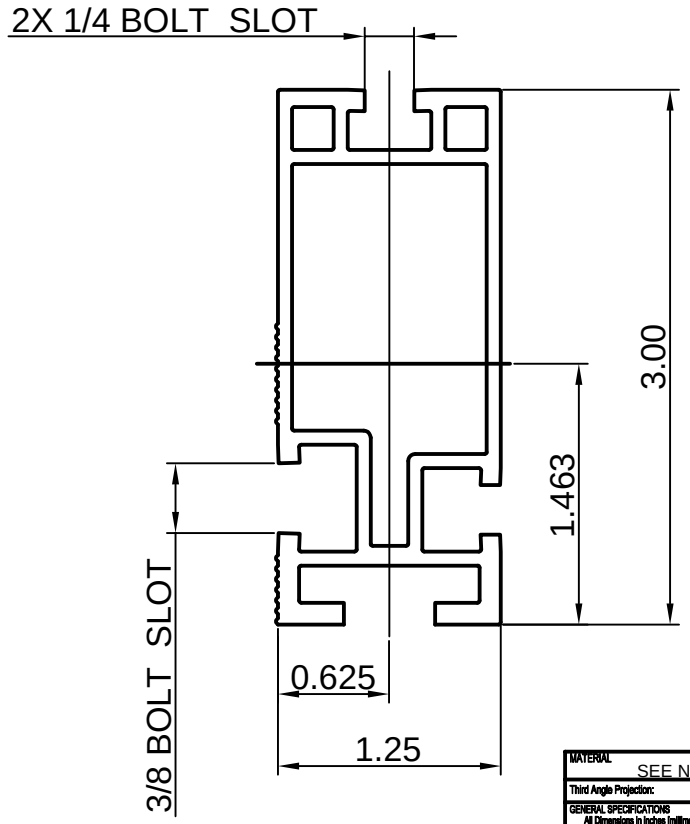

Section properties:

Weight: 1.151 lbs/ft
Area: 0.980 in^2
Perimeter: 22.104 in
Bounding Box: X: -0.625,0.625
Y: -1.463,1.537
Centroid:(0.000,0.000)
Moments of Inertia(in^4): Ix=1.047,Iy=0.207
Section modulus in bending(in^3): Wx=0.681,Wy=0.331
Radii of Gyration: X: 1.034, Y: 0.460

MATERIAL: SEE NOTES
Third Angle Projection:
GENERAL SPECIFICATIONS
All Dimensions in Inches [millimeters]
Tolerances
X.XXX ±0.01 [0.25mm]
X.XX ±0.02 [0.50mm]
X.X ±0.039 [1.0mm]
Unless otherwise specf'd
Break all sharp edges .010-.020 unless otherwise specified.
DRAWN BY: zcg
DATE: 02/21/2013
CHECKED BY
APPROVALS

Sunmodo Corp.
1905 E 5TH STREET, SUITE A, VANCOUVER, WA 98661

TITLE: HELIO HEAVY RAIL
B
DRAWING NUMBER: A20145
SCALE: NONE
SHEET 1 of 1

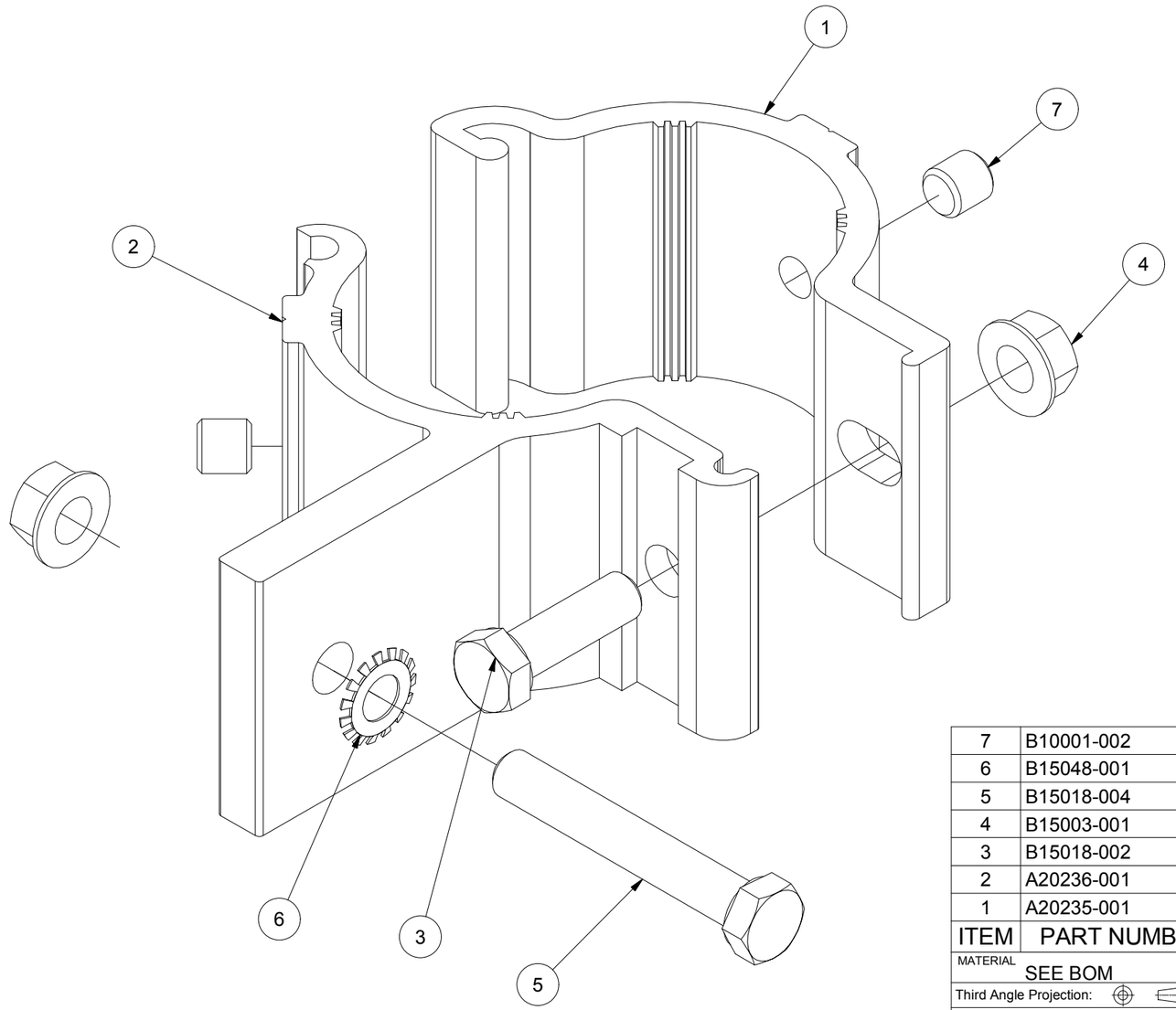

ITEM	PART NUMBER	DESCRIPTION	QTY
7	B10001-002	SET SCREW M10X10	2
6	B15048-001	STAR WASHER FOR 3/8 BOLT	1
5	B15018-004	HEX CAP SCREW 3/8-16 X2.5	1
4	B15003-001	FLANGE NUT 3/8-16	2
3	B15018-002	HEX CAP SCREW 3/8-16 X 1.25	1
2	A20236-001	2 AL PIPE CLAMP, FEMALE	1
1	A20235-001	2 AL PIPE CLAMP, MALE	1

MATERIAL: SEE BOM

Third Angle Projection:

GENERAL SPECIFICATIONS
All Dimensions in inches [millimeters]
Tolerances
X.XXX ±0.01 [0.25mm]
X.XX ±0.02 [0.50mm]
X.X ±0.039 [1.0mm]
Unless otherwise spec'd

Break all sharp edges .010-.020 unless otherwise specified.

DRAWN BY: zcg
DATE: 08/12/2015
CHECKED BY:
APPROVALS:

Sunmodo Corp.

1905 E 5TH STREET, STE A, VANCOUVER, WA 98661

TITLE: 2 AL PIPE CLAMP KIT

B — DRAWING NUMBER: K10219-001

SCALE: NONE — SHEET 1 of 1

REVISIONS			
REV	DESCRIPTION	BY	DATE
A	INITIAL RELEASE	LWF	06/12/2018
B	ADD C10005-006	LWF	06/27/2018

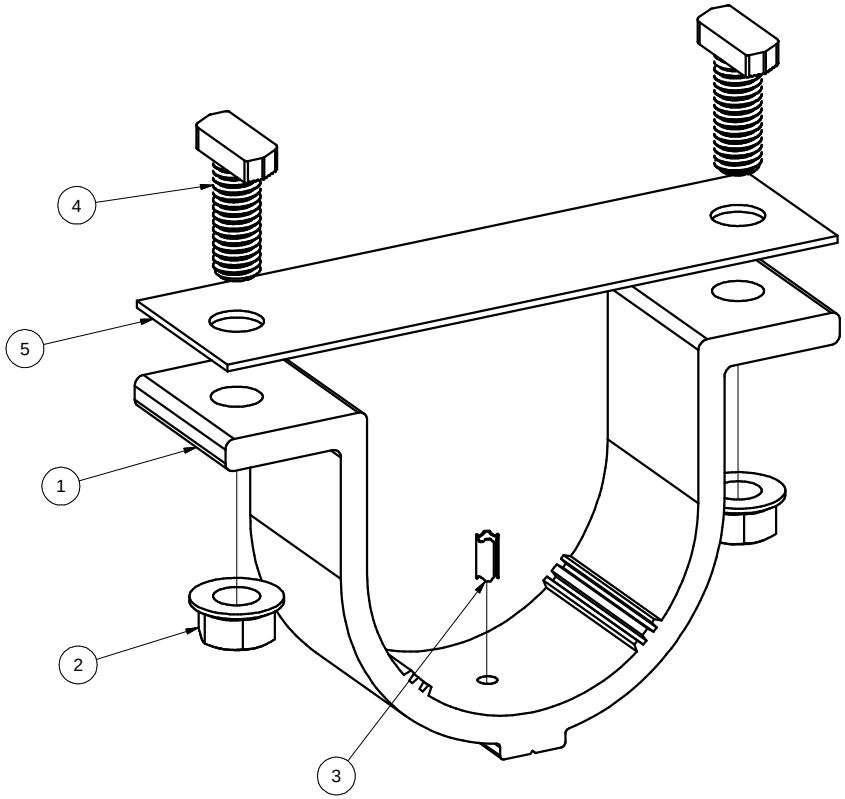

ITEM	PART NUMBER	DESCRIPTION	QTY
5	C10005-006	PVC GASKTE T=1.5mm	1
4	B50033-001	T-BOLT, RAIL BOTTOM SLOT, 3/8-16 X 1"	2
3	B20018-002	GROUNDING PIN	1
2	B15003-001	FLANGE NUT 3/8-16	2
1	A20329-001	2.5" AL PIPE U-BOLT	1

MATERIAL: SEE NOTES

Third Angle Projection:

GENERAL SPECIFICATIONS
All Dimensions in inches [millimeters]
Tolerances
X.XXX ±0.01 [0.25mm]
X.XX ±0.02 [0.50mm]
X.X ±0.039 [1.0mm]
Unless otherwise spec'd
Break all sharp edges .010-.020 unless otherwise specified.

DRAWN BY: KYY
DATE: 06/12/2018
CHECKED BY
APPROVALS

SunModo Corp.

14800 NE 65TH STREET, VANCOUVER WA 98682

TITLE: 2.5" AL PIPE U-CLAMP KIT

B

DRAWING NUMBER: K10343-001

SCALE: NONE

SHEET 1 of 1

REVISIONS			
REV	DESCRIPTION	BY	DATE
A	INITIAL RELEASE	zcg	09/25/2015

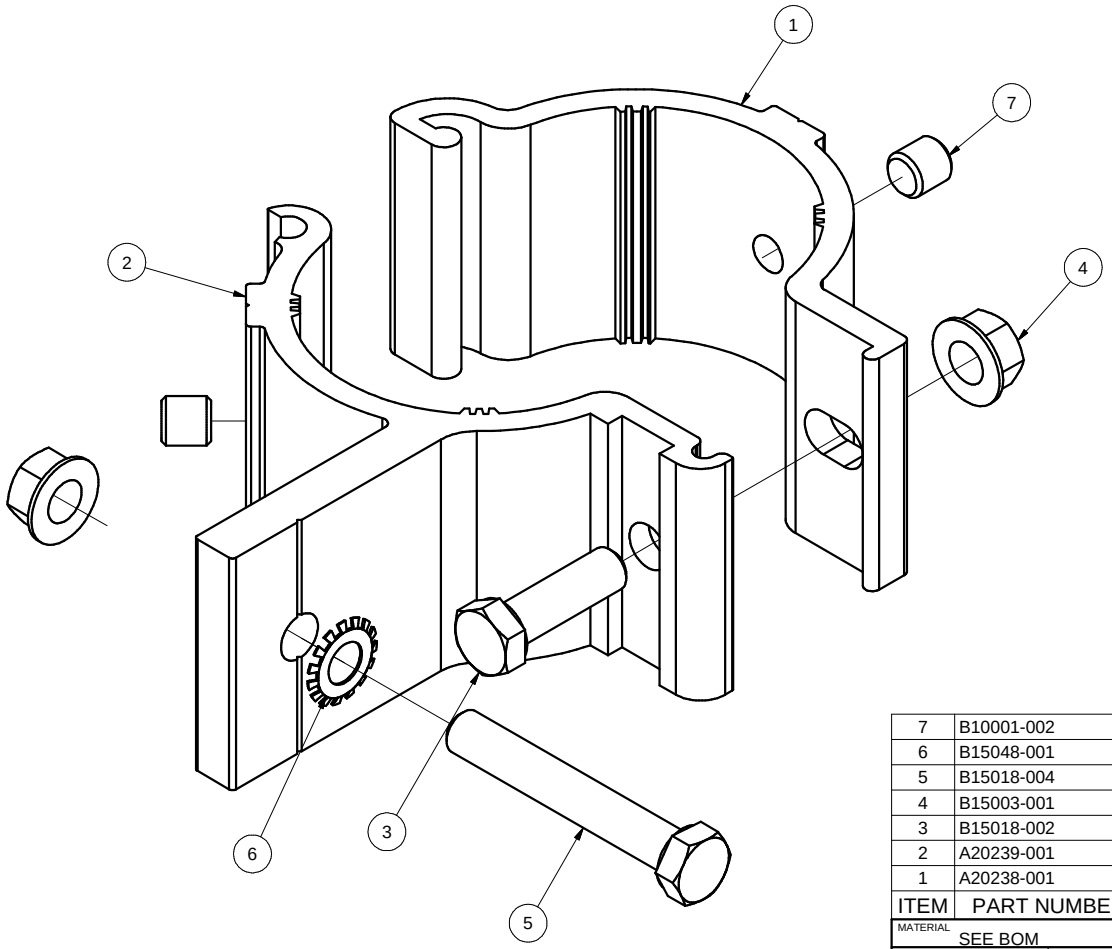

ITEM	PART NUMBER	DESCRIPTION	QTY
7	B10001-002	SET SCREW M10X10	2
6	B15048-001	STAR WASHER FOR 3/8 BOLT	1
5	B15018-004	HEX CAP SCREW 3/8-16 X2.5	1
4	B15003-001	FLANGE NUT 3/8-16	2
3	B15018-002	HEX CAP SCREW 3/8-16 X 1.25	1
2	A20239-001	2.5 AL PIPE CLAMP, FEMALE	1
1	A20238-001	2.5 AL PIPE CLAMP, MALE	1

MATERIAL: SEE BOM

Third Angle Projection:

GENERAL SPECIFICATIONS
All Dimensions in inches [millimeters]
Tolerances
X.XXX ±0.01 [0.25mm]
X.XX ±0.02 [0.50mm]
X.X ±0.039 [1.0mm]
Unless otherwise spec'd

Break all sharp edges .010-.020 unless otherwise specified.

DRAWN BY: LWF
DATE: 08/21/2015
CHECKED BY:
APPROVALS:

Sunmodo Corp.

1905 E 5TH STREET, STE A, VANCOUVER, WA 98661

TITLE: 2.5 AL PIPE CLAMP KIT

B

DRAWING NUMBER: K10222-001

SCALE: NONE

SHEET 1 of 1

REVISIONS			
REV	DESCRIPTION	BY	DATE
A	INITIAL RELEASE	LWF	06/12/2018

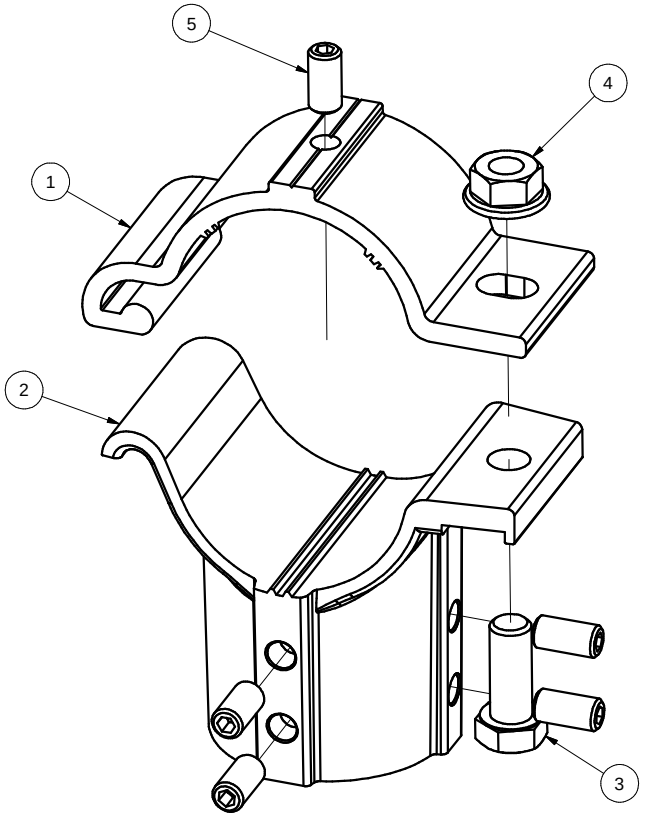

ITEM	PART NUMBER	DESCRIPTION	QTY
5	B10001-001	SET SCREW M10X20	5
4	B15020-001	FLANGE NUT 1/2-13	1
3	B15014-005	HEX CAP SCREW 1/2-13 X 1.25", 304 SS	1
2	A20327-001	2.5" AL PIPE TEE, FEMALE	1
1	A20326-001	2.5" AL PIPE TEE, MALE	1

MATERIAL: SEE NOTES

Third Angle Projection:

GENERAL SPECIFICATIONS
All Dimensions in inches [millimeters]
Tolerances
X.XXX ±0.01 [0.25mm]
X.XX ±0.02 [0.50mm]
X.X ±0.039 [1.0mm]
Unless otherwise spec'd

Break all sharp edges .010-.020 unless otherwise specified.

DRAWN BY: LWF
DATE: 06/12/2018
CHECKED BY:
APPROVALS:

SunModo Corp.

14800 NE 65TH STREET, VANCOUVER WA 98682

TITLE: 2.5" PIPE TEE KIT

B

DRAWING NUMBER: K10341-001

SCALE: NONE

SHEET 1 of 1

REVISIONS			
REV	DESCRIPTION	BY	DATE
A	INITIAL RELEASE	LWF	06/12/2018

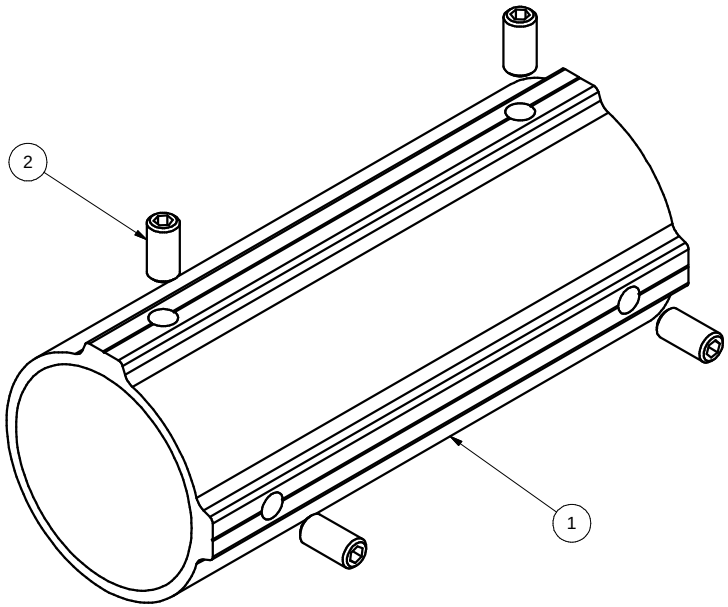

ITEM	PART NUMBER	DESCRIPTION	QTY
2	B10001-001	SET SCREW M10X20	4
1	A20328-001	2.5" PIPE SPLICE	1

MATERIAL: SEE NOTES

Third Angle Projection:

GENERAL SPECIFICATIONS
All Dimensions in inches [millimeters]
Tolerances
X.XXX ±0.01 [0.25mm]
X.XX ±0.02 [0.50mm]
X.X ±0.039 [1.0mm]
Unless otherwise spec'd

Break all sharp edges .010-.020 unless otherwise specified.

DRAWN BY: LWF
DATE: 06/12/2018
CHECKED BY:
APPROVALS:

SunModo Corp.

14800 NE 65TH STREET, VANCOUVER WA 98682

TITLE: 2.5" PIPE SPLICE KIT

B — DRAWING NUMBER: K10342-001

SCALE: NONE — SHEET 1 of 1

NOTES: UNLESS OTHERWISE SPECIFIED

1. DIMENSIONS SHOWN ARE INCHES [MILIMETERS].

2. MATERAIL:HIGH STRENGTH STEEL PIPE OR TUBE.

3. FINISH: HOT DIP GALVANIZE PER ASTM A123 / A123M - 02.

   MINIMUM 50 KSI YIELD STRESS.

4. BREAK ALL BURRS AND SHARP EDGES.

5. ALL WELDING MUST BE IN COMPLIANCE WITH AWS CODE D1;1.

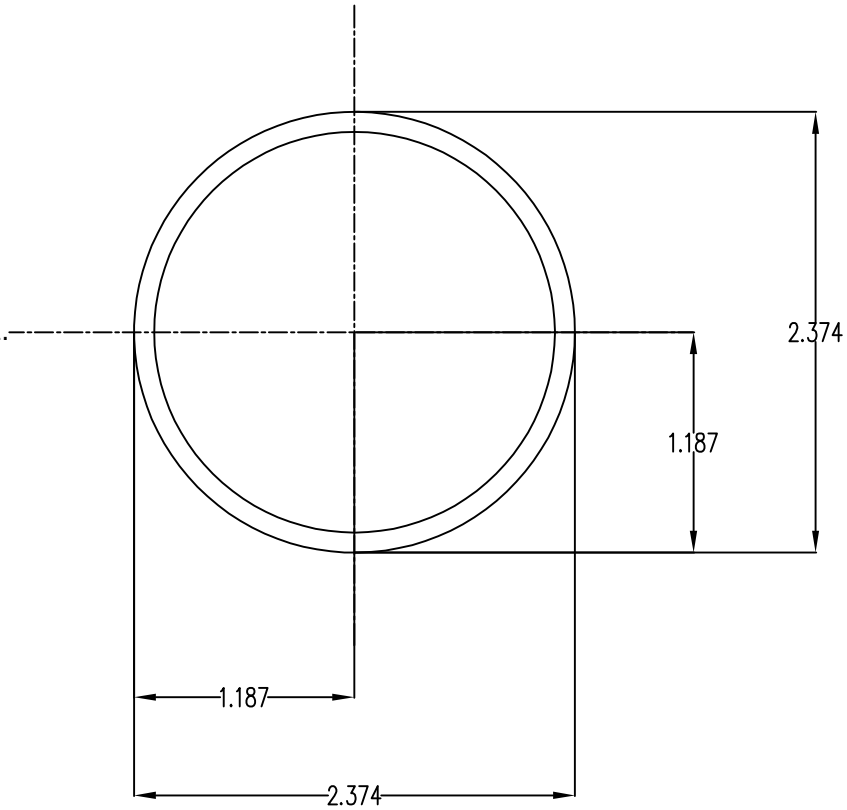

Section properties:

Weight: 2.641 lbs/ft
Area: 0.776 in^2
Perimeter: 14.238 in
Bounding Box: X: -1.187,1.187
Y: -1.187,1.187
Centroid:(0.000,0.000)
Moments of Inertia(in^4): Ix=0.499,Iy=0.499
Section modulus in bending(in^3): Wx=0.420,Wy=0.420
Radii of Gyration: X: 0.802, Y: 0.802

MATERIAL SEE NOTES		**Sunmodo Corp.** 14800 NE 65TH STREET, VANCOUVER WA 98682
Third Angle Projection:		
GENERAL SPECIFICATIONS All Dimensions in Inches [millimeters] Tolerances X.XXX ±0.01 [0.25mm] X.XX ±0.02 [0.50mm] X.X ±0.039 [1.0mm] Unless otherwise spec'd	Break all sharp edges .010-.020 unless otherwise specified.	TITLE PIPE, HSS, 2.375" OD X 12 GAUGE,L=XXX
DRAWN BY LWF	DATE 04/03/2019	B — DRAWING NUMBER A21165
CHECKED BY		
APPROVALS		SCALE: NONE — SHEET 1 of 1

NOTES: UNLESS OTHERWISE SPECIFIED

1. DIMENSIONS SHOWN ARE INCHES [MILIMETERS].

2. MATERAIL:HIGH STRENGTH STEEL PIPE OR TUBE.

3. FINISH: HOT DIP GALVANIZE PER ASTM A123 / A123M - 02.

   MINIMUM 50 KSI YIELD STRESS.

4. BREAK ALL BURRS AND SHARP EDGES.

5. ALL WELDING MUST BE IN COMPLIANCE WITH AWS CODE D1;1.

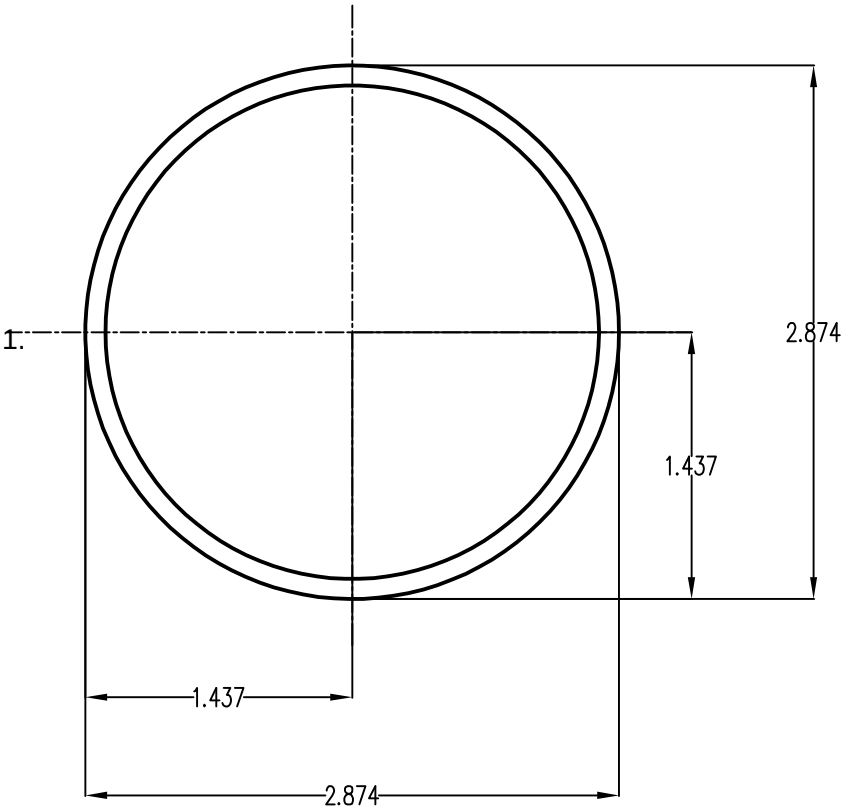

Section properties:

Weight: 3.201 lbs/ft
Area: 0.941 in^2
Perimeter: 17.378 in
Bounding Box: X: -1.437,1.437
Y: -1.437,1.437
Centroid:(0.000,0.000)
Moments of Inertia(in^4): Ix=0.901,Iy=0.901
Section modulus in bending(in^3): Wx=0.627,Wy=0.627
Radii of Gyration: X: 0.979, Y: 0.979

MATERIAL SEE NOTES		**Sunmodo Corp.**
Third Angle Projection:		14800 NE 65TH STREET, VANCOUVER WA 98682
GENERAL SPECIFICATIONS All Dimensions in Inches [millimeters] Tolerances X.XXX ±0.01 [0.25mm] X.XX ±0.02 [0.50mm] X.X ±0.039 [1.0mm] Unless otherwise spec'd	Break all sharp edges .010-.020 unless otherwise specified.	TITLE PIPE, HSS, 2.875" OD X 12 GAUGE,L=XXX
DRAWN BY LWF	DATE 04/03/2019	B — DRAWING NUMBER A21168
CHECKED BY		
APPROVALS		SCALE: NONE — SHEET 1 of 1

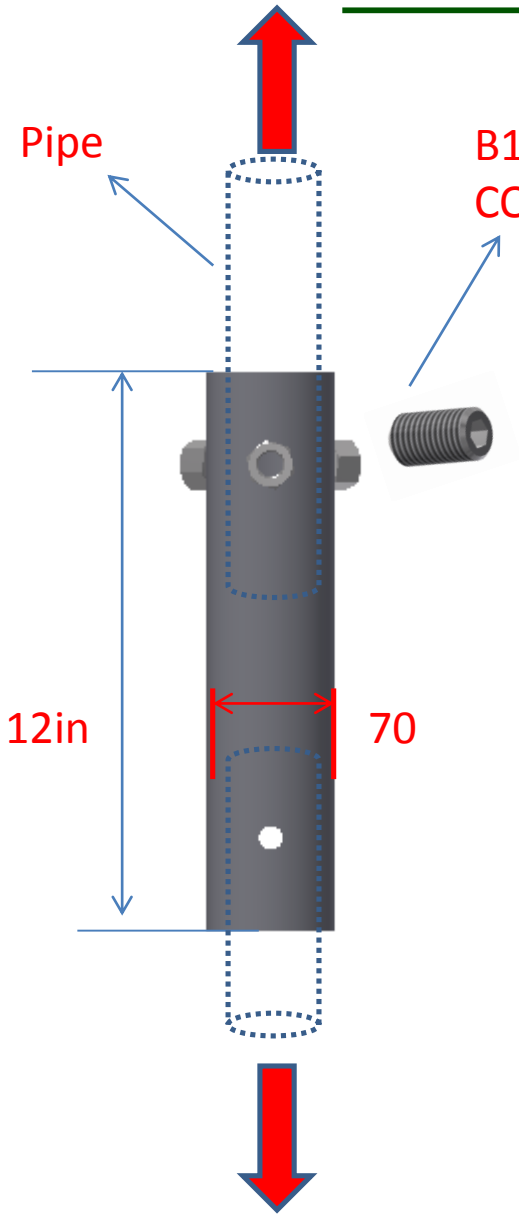

Conditions for load test：

1. The helical auger and ground screw use the same top section, so only one was used for testing
2. A 12 inch section from the top of the auger/ground screw was used
3. Three tests on each pipe type was used
4. The auger/screw material supplied by the auger/screw supplier.