Project Number: U2716-0218-201

September 3, 2021

Sunmodo
14800 NE 65th Street
Vancouver, WA 98682

REFERENCE: Sunmodo Sunturf Ground Mount A8 (85x45)
Ground Mount PV Array Installation

To Whom It May Concern:

Per request of Sunmodo, we have been asked to prepare the structural design of a ground-mounted PV solar array system with several foundation options as shown in the attached calculations. The adopted building code in this jurisdiction is the 2015 New Mexico Commercial Building Code (2015 IBC). Vector Structural Engineering requires that we review each site-specific install, and we are not liable for installs at site specific locations we have not reviewed. The following design parameters are used in our analysis:

- Minimum Design Loads for Buildings and Other Structures (ASCE 7-10)
- Design wind speed for risk category I structures: 115 mph
- Wind exposure: C
- Ground snow load: 50 psf
- The ground screws and helical piers must be tested to 1.5 times uplift and 2.0 times lateral reactions found in the table below. A minimum of one ground screw or helical pier must be tested.

Load (ASD)	Value (lbs)	Factor of Safety	Test Value (lbs)
UPLIFT	2881	1.5	4322
LATERAL	1919	2	3838

Foundation concrete shall have a minimum compressive strength of 2500 psi at 28 days. Cement for all concrete shall be Type I or II with a minimum of 6% entrained air with a water/cement ratio of 0.50. Maximum aggregate size shall be 3/4". No special inspection of concrete strength is required.

Footings are designed based on an allowable soil bearing pressure of 1500 psf an allowable skin friction of 250 psf, an allowable lateral bearing pressure of 150 pcf, and a coefficient of friction of 0.3. Vector Structural Engineering strongly recommends independent soils testing be performed by a licensed geotechnical engineer to verify the assumed soil parameters.

All ground mounts are to be installed per manufacturer's recommendations. The use of solar panel support span tables provided by the manufacturer is allowed only where the site conditions and solar panel configuration match the description of the span tables. Electrical engineering is beyond our scope. All work performed must be in accordance with accepted industry-wide methods and applicable safety standards. Vector Structural Engineering assumes no responsibility for improper installation of the solar panels.

Very truly yours,

VECTOR STRUCTURAL ENGINEERING, LLC

BRETT D. VEAZIE
NEW MEXICO
25631
PROFESSIONAL ENGINEER

09/03/2021

Brett Veazie, P.E.
License: 25631 - Expires: 12/31/2021
Project Engineer

Enclosures

BDV/mih

VECTOR ENGINEERS
651 W GALENA PARK BLVD. #101 (801) 990-1775
DRAPER, UTAH 84020 (801) 990-1776 FAX

JOB NO. U2716-0218-201
PROJECT SUNMODO SUNTURF GROUND MOUNTS A8
SUBJECT ALL OPTIONS

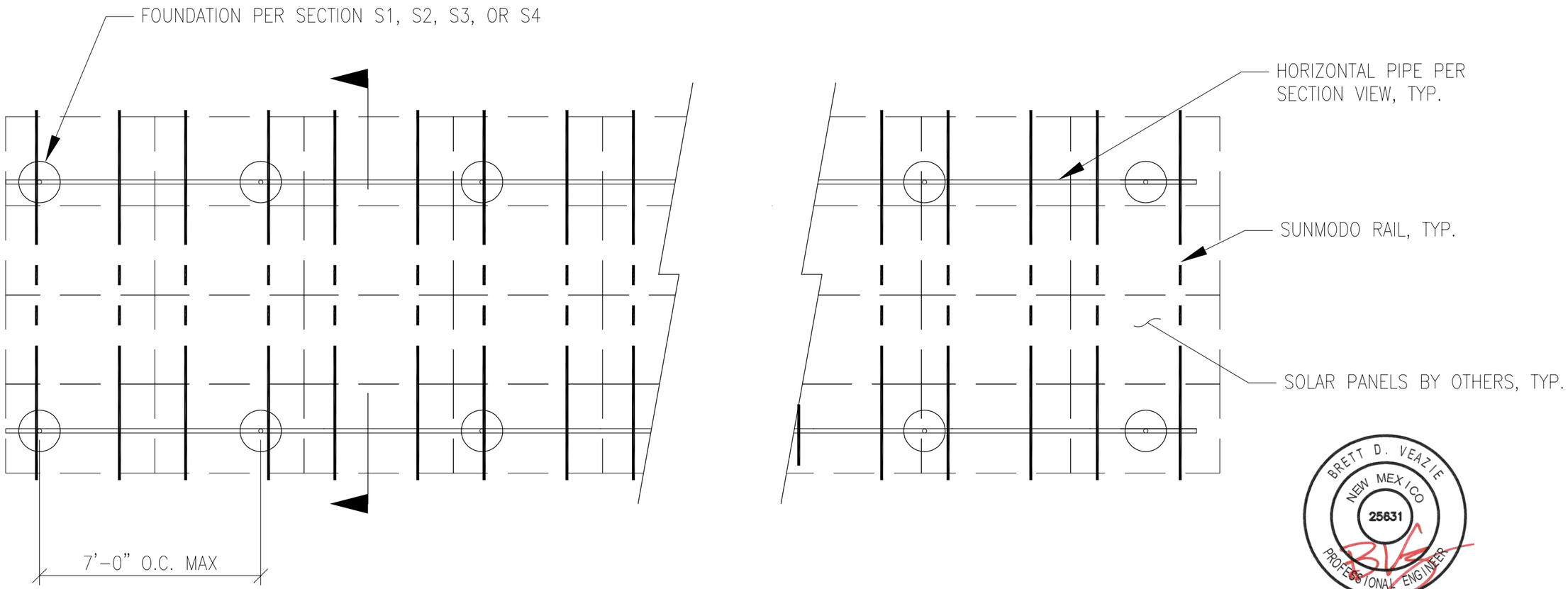

BRETT D. VEAZIE
NEW MEXICO
25631
PROFESSIONAL ENGINEER
09/03/2021

PV ARRAY PLAN

N.T.S.

P1

Vector Engineers requires that we review each site specific install and is not liable for installs at site specific locations we have not reviewed.

VECTOR ENGINEERS

JOB NO. U2716-0218-201

PROJECT SUNMODO SUNTURF GROUND MOUNTS A8

SUBJECT DRILLED PIER OPTION

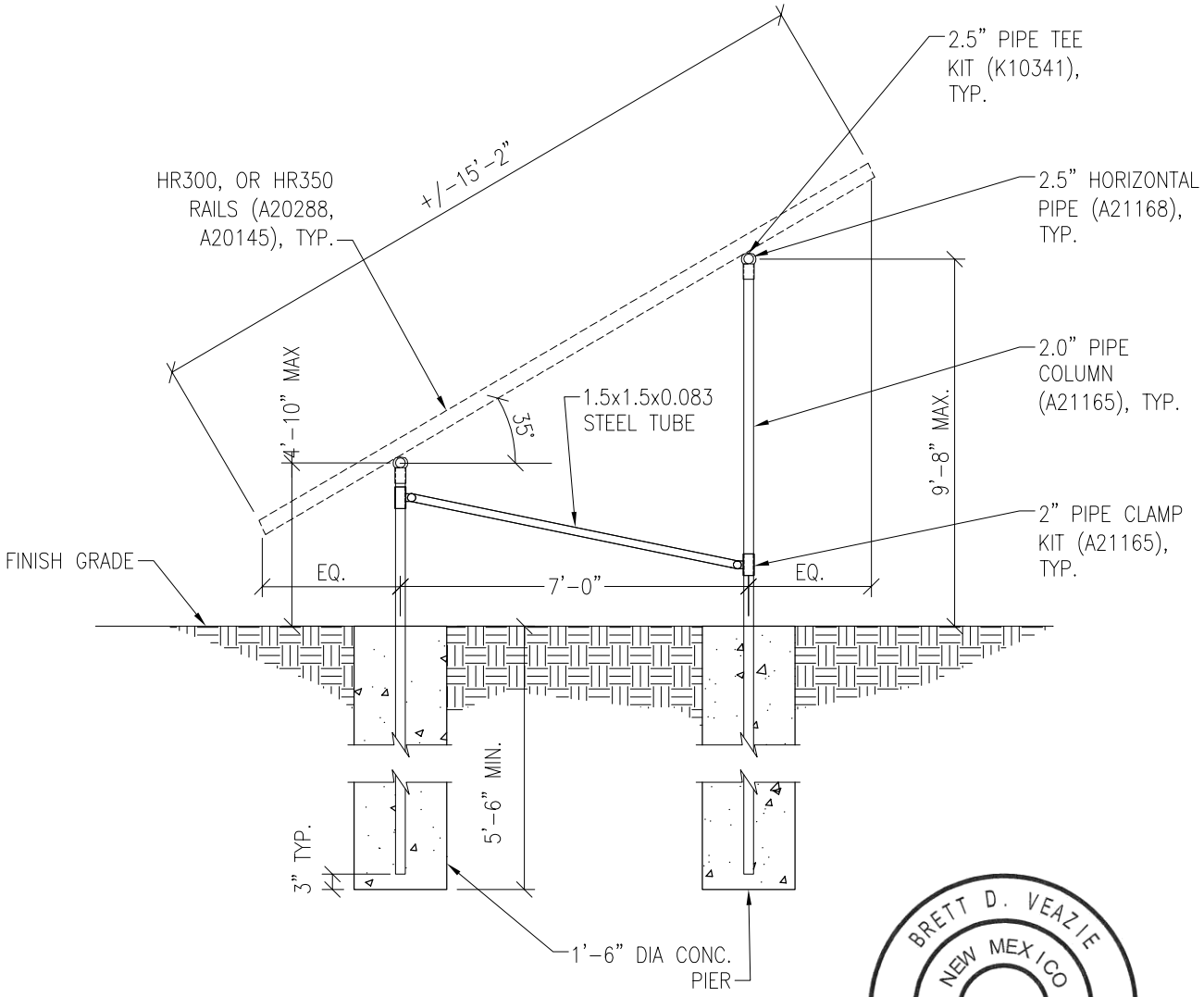

BRETT D. VEAZIE
NEW MEXICO
25631
PROFESSIONAL ENGINEER

09/03/2021

Vector Engineers requires that we review each site specific install and is not liable for installs at site specific locations we have not reviewed.

PV ARRAY SECTION

N.T.S.

S1

651 W GALENA PARK BLVD. #101
DRAPER, UTAH 84020
(801) 990-1775
(801) 990-1776 FAX
WWW.VECTORSE.COM

VECTOR ENGINEERS

JOB NO. U2716-0218-201

PROJECT SUNMODO SUNTURF GROUND MOUNTS A8

SUBJECT HELICAL PIER OPTION

NOTES:

1. For ground mount components see Section S1.
2. A minimum of (1) installed helical pier must be tested as follows:
   - 2.1. Safety factor for uplift to be 1.5
   - 2.2. S.F. for lateral loads to be 2.0
   - 2.3. Upward deflection limit = 1/2"
   - 2.4. Lateral deflection limit = 1"
   - 2.5. The load tests must be performed by an approved contractor

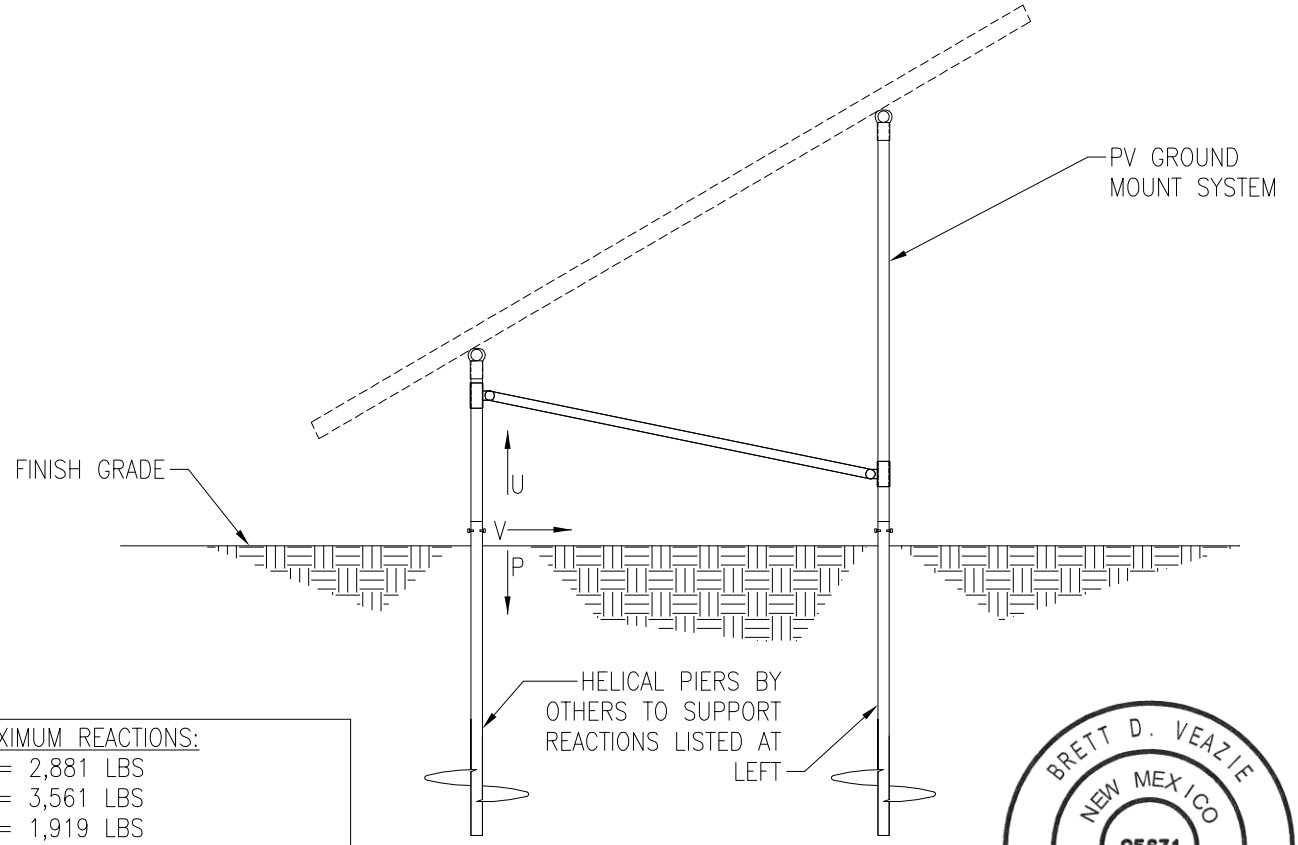

MAXIMUM REACTIONS:
U = 2,881 LBS
P = 3,561 LBS
V = 1,919 LBS

BRETT D. VEAZIE
NEW MEXICO
25631
PROFESSIONAL ENGINEER

09/03/2021

Vector Engineers requires that we review each site specific install and is not liable for installs at site specific locations we have not reviewed.

PV ARRAY SECTION

N.T.S.

S2

651 W GALENA PARK BLVD. #101
DRAPER, UTAH 84020
(801) 990-1775
(801) 990-1776 FAX
WWW.VECTORSE.COM

VECTOR ENGINEERS

JOB NO. U2716-218-201

PROJECT SUNMODO SUNTURF GROUND MOUNTS A8

SUBJECT GROUND SCREW OPTION

NOTES:

1. For ground mount components see Section S1.
2. A minimum of (1) installed ground screw must be tested as follows:
   - 2.1. Safety factor for uplift to be 1.5
   - 2.2. S.F. for lateral loads to be 2.0
   - 2.3. Upward deflection limit = 1/2"
   - 2.4. Lateral deflection limit = 1"
   - 2.5. The load tests must be performed by an approved contractor

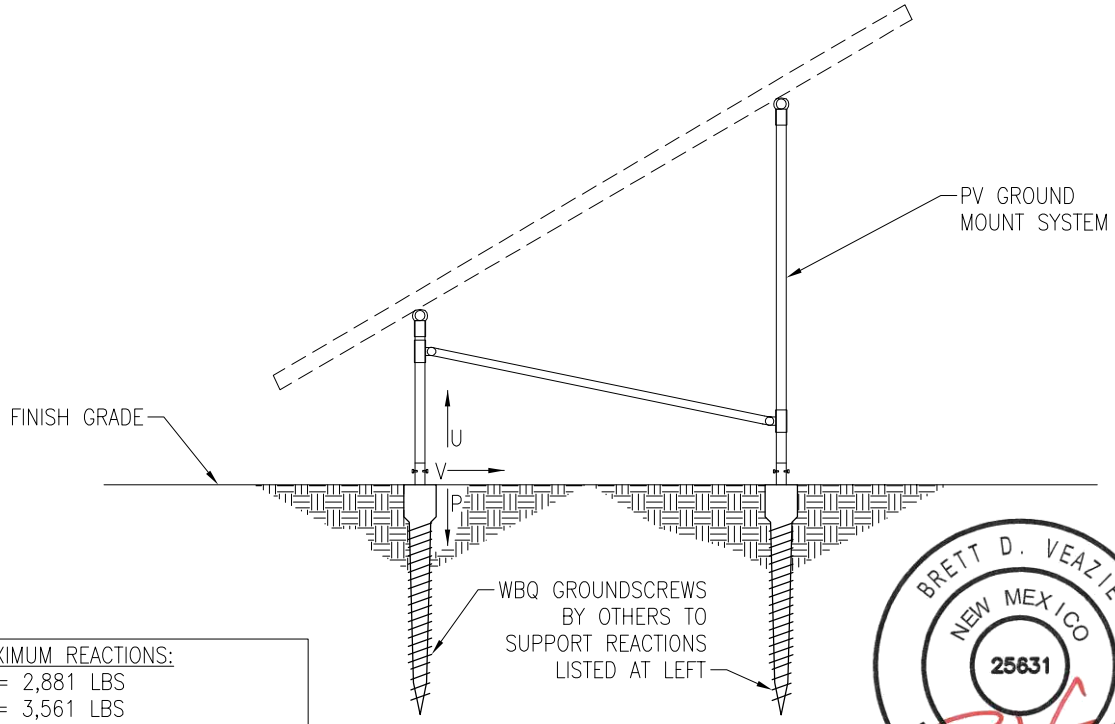

MAXIMUM REACTIONS:
U = 2,881 LBS
P = 3,561 LBS
V = 1,919 LBS

BRETT D. VEAZIE
NEW MEXICO
25631
PROFESSIONAL ENGINEER

09/03/2021

Vector Engineers requires that we review each site specific install and is not liable for installs at site specific locations we have not reviewed.

PV ARRAY SECTION

N.T.S.

S3

651 W GALENA PARK BLVD. #101
DRAPER, UTAH 84020
(801) 990-1775
(801) 990-1776 FAX
WWW.VECTORSE.COM

VECTOR ENGINEERS

JOB NO. U2716-0218-201

PROJECT SUNMODO SUNTURF GROUND MOUNTS A8

SUBJECT BALLASTED BLOCK OPTION

NOTES:

1. For ground mount components see Section S1.

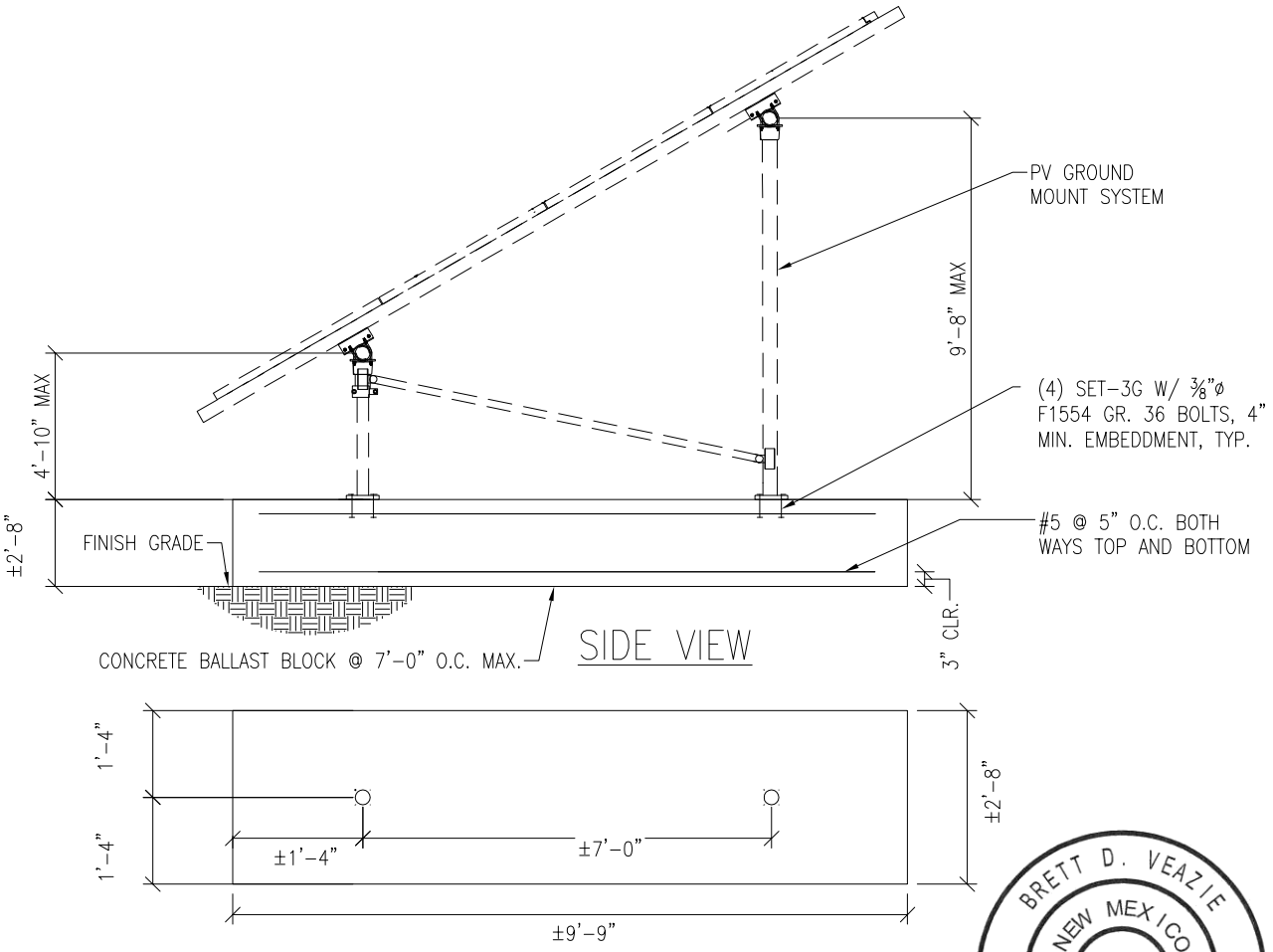

Vector Engineers requires that we review each site specific install and is not liable for installs at site specific locations we have not reviewed.

BRETT D. VEAZIE
NEW MEXICO
25631
PROFESSIONAL ENGINEER

09/03/2021

PV ARRAY SECTION

N.T.S.

S4

651 W GALENA PARK BLVD. #101
DRAPER, UTAH 84020
(801) 990-1775
(801) 990-1776 FAX
WWW.VECTORSE.COM

JOB NO.: U2716-0218-201 **DESIGNED:** STB
DATE: 06/25/20

PROJECT: A8 – Sunmodo Sunturf GM **SUBJECT:** Snow Load

SNOW LOAD (S):

ASCE 7 Standard:	10	
Panel Slope from Horizontal [°]:	35.0	
Snow Ground Load, p_g [psf]:	50.0	(Section 7.2)
Terrain Category:	C	(Table 7-2)
Exposure of Roof:	Fully Exposed	(Table 7-2)
Exposure Factor, C_e:	0.9	(Table 7-2)
Thermal Factor, C_t:	1.2	(Table 7-3)
Risk Category:	I	(Table 1.5-1)
Importance Factor, I_S:	0.8	(Table 1.5-2)
Flat Roof Snow Load, p_f [psf]:	30	(Equation 7.3-1)
Minimum Roof Snow Load, p_m [psf]:	0	(Section 7.3.4)
Unobstructed Slippery Surface?	Yes	(Section 7.4)
Slope Factor Figure:	Figure 7-2c	(Section 7.4)
Roof Slope Factor, C_s:	0.636	(Figure 7-2)
Sloped Roof Snow Load, p_s [psf]:	19	(Equation 7.4-1)
Design Snow Load, S [psf]:	19	

JOB NO.: U2716-0218-201 **DESIGNED:** STB
DATE: 06/25/20

PROJECT: A8 – Sunmodo Sunturf GM **SUBJECT:** Wind Pressure

Design Wind Load:

ASCE 7 Standard:	10	
Basic Wind Speed, V [mph]:	115	
Risk Category:	I	
Exposure Category	C	(Section 26.7.3)
Velocity Pressure Exposure Coefficient, K_h:	0.85	(Table 27.3-1)
Topographic Factor, K_{ht}:	1.0	(Section 26.8.2)
Wind Directionality Factor, K_d:	0.85	(Table 26.6-1)
Internal Pressure Coefficient, GC_{pi} :	0.00	(Table 26.11-1)
Velocity Pressure, q_h [psf]:	24.5	(Equation 27.3-1)
Gust Effect Factor, G:	0.85	(Section 26.9.1)
Panel Slope [degrees]:	35.0	

Net Pressure Coefficients (C_N) per: (Figure 27.4-4)

Clear Wind Flow	C_{NW}	C_{NL}
Case 1 (γ = 0°, Load Case A)	-1.80	-1.80
Case 2 (γ = 0°, Load Case B)	-2.43	-0.57
Case 3 (γ = 180°, Load Case A)	2.10	2.17
Case 4 (γ = 180°, Load Case B)	2.67	1.07

Design Wind Pressures (p) [psf] per: (Equation 27.4-3)

Clear Wind Flow	q_hGC_{NW}	q_hGC_{NL}
Case 1 (γ = 0°, Load Case A)	-37.4	-37.4
Case 2 (γ = 0°, Load Case B)	-50.6	-11.8
Case 3 (γ = 180°, Load Case A)	43.7	45.0
Case 4 (γ = 180°, Load Case B)	55.4	22.2

Foundation Option 1: Drilled Concrete Pier

JOB NO.: U2716-0218-201
SUBJECT: CONC. PIER

PROJECT: Sunturf A8 Ground Mount

DRILLED CONCRETE PIER DESIGN

Column Reactions:

Max. Shear, V [k]:	1.9	Max. Down, P_d [k]:	3.6
Max. Moment, M [k-ft]:	0.0	Max. Uplift, P_u [k]:	2.9

Pier Properties:

Pier Shape:	Round		
Pier Diameter, b [ft]:	1.5	Volume of Concrete [ft^3]:	10
Top of Pier Elevation [ft]:	0.00	Volume of Concrete [yd^3]:	0.4
Pier Depth, d [ft]:	5.5	Weight of Concrete [k]:	1.5

Soil Properties:

Allow. Bearing Pressure [psf]:	1,500	Optional Parameters for Uplift:	
1/3 increase for short term loads?	No		
		Skin Friction* [psf]:	250
Lateral Bearing, S [pcf]:	150	Top Length to Ignore [ft]:	0
Max. Lateral Bearing (opt'l) [psf]:		1/3 increase for short term loads?	No
Top Depth to Ignore [ft]:	0		
1/3 increase for short term loads?	No	Combine w/ Bearing:	No
1/2" deflection at t/o pier allowed:	Yes		

*per IBC Section 1810.3.3.1.4

Check Bearing:

Bearing Capacity [k]:	6.5	**Bearing capacity OK.**

Check Uplift:

Uplift Capacity [k]:	7.8	**Uplift capacity OK.**

Check Lateral Bearing:

Top of Pier Constrained?:	No	IBC Section1807.3.2.1
Applied Lateral Force, P [lb]:	1,919	
Point of Application, h [ft]:	0.0	
$S_{_max}$ [psf]:		
S [psf]:	550	
A = 2.34*P/(Sb):	5.44	
Required Pier Depth, d_{reqd} [ft]:	5.40	IBC Eq. 18-1

Result: **Lateral bearing capacity OK.**

Foundation Option 2: Helical Pier

- The ground screws and helical piers must be tested to 1.5 times uplift and 2.0 times lateral reactions found in the table below. A minimum of one ground screw or helical pier must be tested.

Load (ASD)	Value (lbs)	Factor of Safety	Test Value (lbs)
UPLIFT	2881	1.5	4322
LATERAL	1919	2	3838

Foundation Option 3: Ground Screw

- The ground screws and helical piers must be tested to 1.5 times uplift and 2.0 times lateral reactions found in the table below. A minimum of one ground screw or helical pier must be tested.

Load (ASD)	Value (lbs)	Factor of Safety	Test Value (lbs)
UPLIFT	2881	1.5	4322
LATERAL	1919	2	3838

Foundation Option 4: Ballasted Block

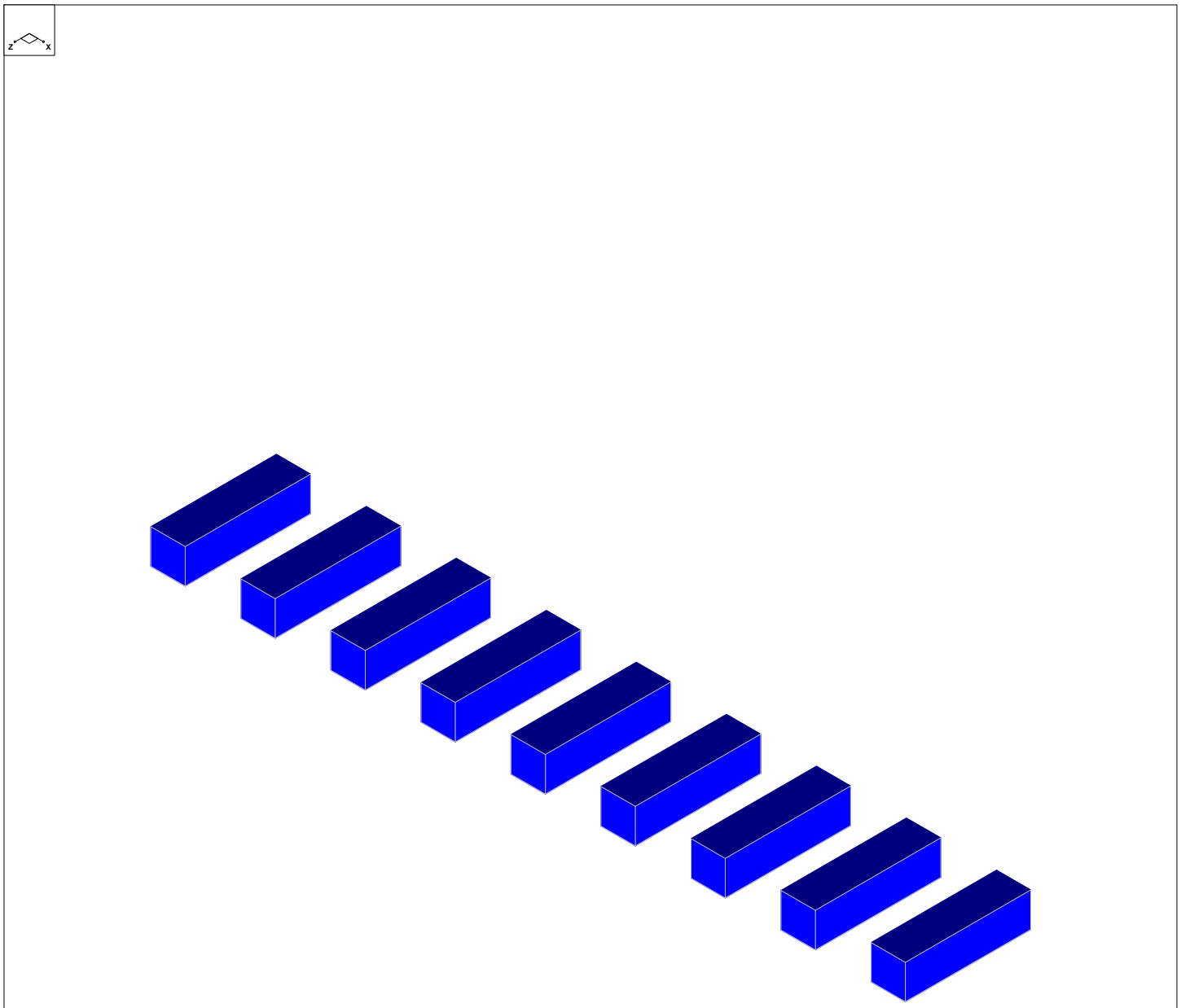

Results for LC 2, 1.0 D

Vector Structural Engineeri...		SK - 2
STB	Ground Mount	Apr 6, 2021 at 9:53 AM
U2716.0218.201		Sunmodo Sunturf A8 v3 85x45.r3d

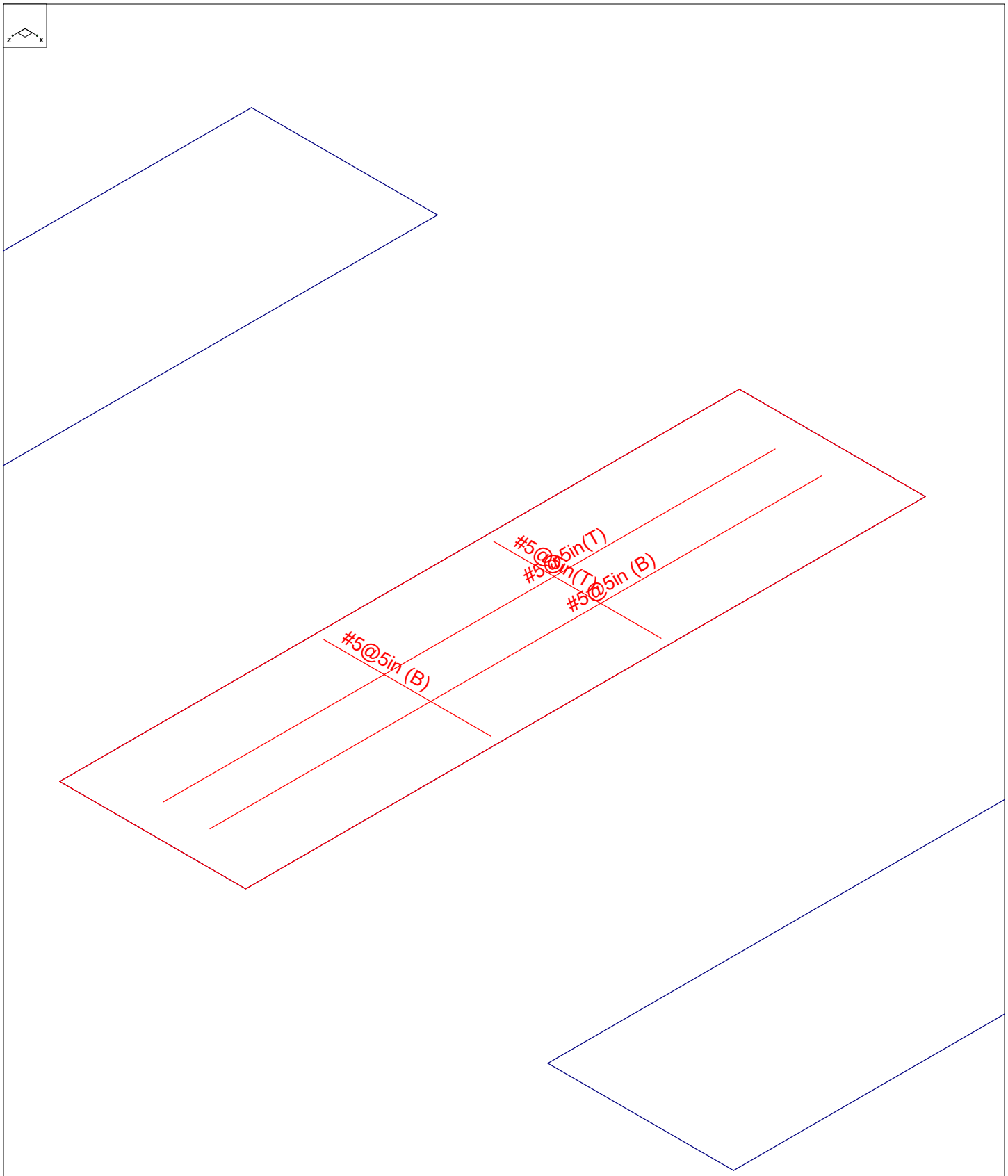

Results for LC 2, 1.0 D

Vector Structural Engineeri...	Ground Mount	SK - 1
STB		Apr 6, 2021 at 9:52 AM
U2716.0218.201		Sunmodo Sunturf A8 v3 85x45.r3d

(Global) Model Settings

Display Sections for Member Calcs	5
Max Internal Sections for Member Calcs	100
Mesh Size (in)	12
Max Iterations	10
Merge Tolerance (in)	.12
Solver	Sparse Accelerated
Coefficient of Friction	.3
No. of Shear Regions	4
Shear Region Spacing Increment (in)	4
Min 1 Bar Dia Spacing for Beams?	No
Optimize footings for OTM / Sliding?	Yes
Parme Beta Factor	.65
Pile Safety Factor	3
Concrete Stress Block	0
Concrete Rebar Set	Rectangular
Concrete Code	ASTM A615
HR Steel Pile Code	ACI 318-14
Wood Pile Code	AISC 14th (360-10): ASD AWC NDS-15: ASD

Concrete Properties

	Label	E [ksi]	G [ksi]	Nu	Therm (/...	Density[k/ft^3]	f'c[psi]	Lambda	Flex Stee...	Shear St...
1	Conc3000NW	3156	1372	.15	.6	.145	3000	1	60000	60000
2	Conc3500NW	3409	1482	.15	.6	.145	3500	1	60000	60000
3	Conc4000NW	3644	1584	.15	.6	.145	4000	1	60000	60000
4	Conc3000LW	2085	907	.15	.6	.11	3000	.75	60000	60000
5	Conc3500LW	2252	979	.15	.6	.11	3500	.75	60000	60000
6	Conc4000LW	2408	1047	.15	.6	.11	4000	.75	60000	60000
7	Conc2500NW	3156	1372	.15	.6	.145	2500	1	60000	60000

General Design Parameters

	Label	Max Bending Chk	Max Shear Chk	Top Cover[in]	Bottom Cover[in]
1	Typical	1	1	3	3

Slab Rebar Parameters

	Label	Top Bar	Bottom Bar	Max Top Bar Sp...	Min Top Bar Sp...	Max Bot Bar Sp...	Min Bot Bar Sp...	Spacing Incr...	Rebar Options
1	Typical	#5	#5	18	5	18	5	1	Optimize

Soil Definitions

	Label	Subgrade Modulus[k/ft^3]	Allowable Bearing[psf]	Depth Properties	Default?
1	Default	172.8	1500	None	Yes

Point Loads and Moments (Cat 1 : DL)

	Label	Direction	Magnitude[lb,lb-ft]
1	R3D_N1	Y	131.538
2	R3D_N2	X	-8.629
3	R3D_N2	Y	109.744
4	R3D_N123	X	1.16
5	R3D_N123	Y	136.709
6	R3D_N124	X	8.542
7	R3D_N124	Y	114.492
8	R3D_N123A_1	Y	269.769

Point Loads and Moments (Cat 1 : DL) (Continued)

	Label	Direction	Magnitude[lb,lb-ft]
9	R3D_N123A_1	Z	-1.171
10	R3D_N124A_1	X	2.075
11	R3D_N124A_1	Y	230.565
12	R3D_N129_1	Y	225.707
13	R3D_N130_1	Y	212.153
14	R3D_N135_1	Y	233.023
15	R3D_N136_1	Y	214.998
16	R3D_N141_1	Y	231.092
17	R3D_N142_1	Y	214.409
18	R3D_N147B_1	Y	233.031
19	R3D_N148A_1	Y	214.994
20	R3D_N153A_1	Y	225.692
21	R3D_N154A_1	Y	212.166
22	R3D_N159	Y	269.284
23	R3D_N159	Z	-1.21
24	R3D_N160	X	-2.09
25	R3D_N160	Y	230.36

Point Loads and Moments (Cat 6 : RLL)

	Label	Direction	Magnitude[lb,lb-ft]
1	R3D_N1	X	-3.078
2	R3D_N1	Y	349.814
3	R3D_N1	Z	3.272
4	R3D_N2	X	-35.667
5	R3D_N2	Y	371.566
6	R3D_N123	X	3.857
7	R3D_N123	Y	371.46
8	R3D_N123	Z	3.256
9	R3D_N124	X	35.323
10	R3D_N124	Y	391.404
11	R3D_N123A_1	X	3.125
12	R3D_N123A_1	Y	944.977
13	R3D_N123A_1	Z	-4.963
14	R3D_N124A_1	X	8.514
15	R3D_N124A_1	Y	882.962
16	R3D_N129_1	Y	808.906
17	R3D_N129_1	Z	2.2
18	R3D_N130_1	X	-1.326
19	R3D_N130_1	Y	803.303
20	R3D_N135_1	Y	834.897
21	R3D_N136_1	Y	815.293
22	R3D_N141_1	Y	827.954
23	R3D_N142_1	Y	812.843
24	R3D_N147B_1	Y	834.927
25	R3D_N148A_1	Y	815.296
26	R3D_N153A_1	Y	808.848
27	R3D_N153A_1	Z	2.215
28	R3D_N154A_1	X	1.309
29	R3D_N154A_1	Y	803.292
30	R3D_N159	X	-3.218
31	R3D_N159	Y	943.17
32	R3D_N159	Z	-5.114
33	R3D_N160	X	-8.606
34	R3D_N160	Y	882.187

Point Loads and Moments (Cat 16 : OL1)

	Label	Direction	Magnitude[lb,lb-ft]
1	R3D_N1	X	-5.001
2	R3D_N1	Y	-1692.917
3	R3D_N1	Z	1019.289
4	R3D_N2	X	40.756
5	R3D_N2	Y	308.18
6	R3D_N2	Z	-69.916
7	R3D_N123	X	3.542
8	R3D_N123	Y	-1801.576
9	R3D_N123	Z	1082.769
10	R3D_N124	X	-43.516
11	R3D_N124	Y	333.814
12	R3D_N124	Z	-72.089
13	R3D_N123A_1	X	-6.074
14	R3D_N123A_1	Y	-4569.868
15	R3D_N123A_1	Z	2695.171
16	R3D_N124A_1	X	-22.345
17	R3D_N124A_1	Y	931.205
18	R3D_N124A_1	Z	-107.766
19	R3D_N129_1	X	1.568
20	R3D_N129_1	Y	-3907.328
21	R3D_N129_1	Z	2306.193
22	R3D_N130_1	X	1.893
23	R3D_N130_1	Y	741.216
24	R3D_N130_1	Z	-111.368
25	R3D_N135_1	Y	-4038.645
26	R3D_N135_1	Z	2392.205
27	R3D_N136_1	X	-1.549
28	R3D_N136_1	Y	787.8
29	R3D_N136_1	Z	-113.341
30	R3D_N141_1	Y	-4008
31	R3D_N141_1	Z	2373.165
32	R3D_N142_1	Y	778.711
33	R3D_N142_1	Z	-113.502
34	R3D_N147B_1	Y	-4037.892
35	R3D_N147B_1	Z	2391.615
36	R3D_N148A_1	X	3.13
37	R3D_N148A_1	Y	787.222
38	R3D_N148A_1	Z	-113.367
39	R3D_N153A_1	X	-1.966
40	R3D_N153A_1	Y	-3912.285
41	R3D_N153A_1	Z	2310.506
42	R3D_N154A_1	Y	745.499
43	R3D_N154A_1	Z	-111.515
44	R3D_N159	X	5.451
45	R3D_N159	Y	-4553.71
46	R3D_N159	Z	2685.074
47	R3D_N160	X	24.397
48	R3D_N160	Y	922.402
49	R3D_N160	Z	-108.174

Point Loads and Moments (Cat 17 : OL2)

	Label	Direction	Magnitude[lb,lb-ft]
1	R3D_N1	X	-5.707
2	R3D_N1	Y	-1867.08
3	R3D_N1	Z	851.18
4	R3D_N2	X	-12.308

Point Loads and Moments (Cat 17 : OL2) (Continued)

	Label	Direction	Magnitude[lb,lb-ft]
5	R3D_N2	Y	744.849
6	R3D_N2	Z	-58.488
7	R3D_N123	X	4.119
8	R3D_N123	Y	-1988.056
9	R3D_N123	Z	905.976
10	R3D_N124	X	8.442
11	R3D_N124	Y	795.07
12	R3D_N124	Z	-60.342
13	R3D_N123A_1	X	-8.054
14	R3D_N123A_1	Y	-5084.377
15	R3D_N123A_1	Z	2258.725
16	R3D_N124A_1	X	-11.87
17	R3D_N124A_1	Y	1996.285
18	R3D_N124A_1	Z	-90.264
19	R3D_N129_1	X	2.117
20	R3D_N129_1	Y	-4347.301
21	R3D_N129_1	Z	1930.45
22	R3D_N130_1	Y	1703.757
23	R3D_N130_1	Z	-93.212
24	R3D_N135_1	Y	-4489.139
25	R3D_N135_1	Z	2001.569
26	R3D_N136_1	X	-1.062
27	R3D_N136_1	Y	1765.802
28	R3D_N136_1	Z	-94.865
29	R3D_N141_1	Y	-4456.366
30	R3D_N141_1	Z	1987.141
31	R3D_N142_1	X	1.05
32	R3D_N142_1	Y	1753.843
33	R3D_N142_1	Z	-95.008
34	R3D_N147B_1	Y	-4488.241
35	R3D_N147B_1	Z	2000.816
36	R3D_N148A_1	X	3.107
37	R3D_N148A_1	Y	1765.125
38	R3D_N148A_1	Z	-94.887
39	R3D_N153A_1	X	-2.588
40	R3D_N153A_1	Y	-4353.046
41	R3D_N153A_1	Z	1935.607
42	R3D_N154A_1	X	2.378
43	R3D_N154A_1	Y	1708.675
44	R3D_N154A_1	Z	-93.348
45	R3D_N159	X	7.349
46	R3D_N159	Y	-5066.113
47	R3D_N159	Z	2247.452
48	R3D_N160	X	14.277
49	R3D_N160	Y	1986.003
50	R3D_N160	Z	-90.576

Point Loads and Moments (Cat 18 : OL3)

	Label	Direction	Magnitude[lb,lb-ft]
1	R3D_N1	X	5.982
2	R3D_N1	Y	2022.748
3	R3D_N1	Z	-1208.731
4	R3D_N2	X	-46.778
5	R3D_N2	Y	-381.791
6	R3D_N2	Z	82.914
7	R3D_N123	X	-4.24

Point Loads and Moments (Cat 18 : OL3) (Continued)

	Label	Direction	Magnitude[lb,lb-ft]
8	R3D_N123	Y	2152.615
9	R3D_N123	Z	-1284.069
10	R3D_N124	X	50.104
11	R3D_N124	Y	-413.155
12	R3D_N124	Z	85.493
13	R3D_N123A_1	X	7.303
14	R3D_N123A_1	Y	5461.703
15	R3D_N123A_1	Z	-3196.358
16	R3D_N124A_1	X	26.27
17	R3D_N124A_1	Y	-1145.108
18	R3D_N124A_1	Z	127.804
19	R3D_N129_1	X	-1.886
20	R3D_N129_1	Y	4669.866
21	R3D_N129_1	Z	-2734.97
22	R3D_N130_1	X	-2.177
23	R3D_N130_1	Y	-915.322
24	R3D_N130_1	Z	132.074
25	R3D_N135_1	Y	4826.668
26	R3D_N135_1	Z	-2836.944
27	R3D_N136_1	X	1.829
28	R3D_N136_1	Y	-971.34
29	R3D_N136_1	Z	134.414
30	R3D_N141_1	Y	4790.086
31	R3D_N141_1	Z	-2814.415
32	R3D_N142_1	Y	-960.415
33	R3D_N142_1	Z	134.605
34	R3D_N147B_1	Y	4825.765
35	R3D_N147B_1	Z	-2836.236
36	R3D_N148A_1	X	-3.729
37	R3D_N148A_1	Y	-970.648
38	R3D_N148A_1	Z	134.445
39	R3D_N153A_1	X	2.363
40	R3D_N153A_1	Y	4675.798
41	R3D_N153A_1	Z	-2740.137
42	R3D_N154A_1	Y	-920.446
43	R3D_N154A_1	Z	132.249
44	R3D_N159	X	-6.557
45	R3D_N159	Y	5442.381
46	R3D_N159	Z	-3184.289
47	R3D_N160	X	-28.727
48	R3D_N160	Y	-1134.571
49	R3D_N160	Z	128.287

Point Loads and Moments (Cat 19 : OL4)

	Label	Direction	Magnitude[lb,lb-ft]
1	R3D_N1	X	3.875
2	R3D_N1	Y	1367.123
3	R3D_N1	Z	-1056.704
4	R3D_N2	X	-81.905
5	R3D_N2	Y	97.644
6	R3D_N2	Z	72.394
7	R3D_N123	X	-2.679
8	R3D_N123	Y	1453.897
9	R3D_N123	Z	-1120.986
10	R3D_N124	X	83.431
11	R3D_N124	Y	95.725

Point Loads and Moments (Cat 19 : OL4) (Continued)

	Label	Direction	Magnitude[lb,lb-ft]
12	R3D_N124	Z	74.614
13	R3D_N123A_1	X	3.745
14	R3D_N123A_1	Y	3652.451
15	R3D_N123A_1	Z	-2787.206
16	R3D_N124A_1	X	28.975
17	R3D_N124A_1	Y	77.384
18	R3D_N124A_1	Z	111.49
19	R3D_N129_1	Y	3122.869
20	R3D_N129_1	Z	-2386.901
21	R3D_N130_1	X	-3.687
22	R3D_N130_1	Y	159.797
23	R3D_N130_1	Z	115.275
24	R3D_N135_1	Y	3231.471
25	R3D_N135_1	Z	-2476.676
26	R3D_N136_1	X	1.804
27	R3D_N136_1	Y	131.306
28	R3D_N136_1	Z	117.315
29	R3D_N141_1	Y	3205.848
30	R3D_N141_1	Z	-2455.679
31	R3D_N142_1	Y	136.991
32	R3D_N142_1	Z	117.476
33	R3D_N147B_1	Y	3230.921
34	R3D_N147B_1	Z	-2476.287
35	R3D_N148A_1	X	-2.823
36	R3D_N148A_1	Y	131.738
37	R3D_N148A_1	Z	117.343
38	R3D_N153A_1	X	1.228
39	R3D_N153A_1	Y	3126.634
40	R3D_N153A_1	Z	-2390.043
41	R3D_N154A_1	X	2.733
42	R3D_N154A_1	Y	156.504
43	R3D_N154A_1	Z	115.417
44	R3D_N159	X	-3.257
45	R3D_N159	Y	3639.782
46	R3D_N159	Z	-2779.169
47	R3D_N160	X	-30.509
48	R3D_N160	Y	84.002
49	R3D_N160	Z	111.937

Slabs

	Label	Thickness [in]	Material	Local Axis Angle ...	Analysis Offset [in]	Passive Pressur...	Soil Overburden [psf]
1	S1	32	Conc2500NW	0	0	0	0
2	S2	32	Conc2500NW	0	0	0	0
3	S3	32	Conc2500NW	0	0	0	0
4	S4	32	Conc2500NW	0	0	0	0
5	S5	32	Conc2500NW	0	0	0	0
6	S6	32	Conc2500NW	0	0	0	0
7	S7	32	Conc2500NW	0	0	0	0
8	S8	32	Conc2500NW	0	0	0	0
9	S9	32	Conc2500NW	0	0	0	0

Load Combinations

	Label	Solve	Service	A...	SF	Cat...	Fa...	Cat...	Fa...	Cat...	Fa...	Cat...	Fa...	Cat...	Fa...	Cat...	Fa...	Cat...	Fa...	Cat...	Fa...	C...	F...	C...	F...
1	ASD Loads																								
2	1.0 D	Yes	Yes		1.5	DL	1																		
3	1.0 D + 1....	Yes	Yes		1.5	DL	1	RLL	1																

Load Combinations (Continued)

	Label	Solve	Service	A...	SF	Cat...	Fa...	Cat...	Fa...	Cat...	Fa...	Cat...	Fa...	Cat...	Fa...	Cat...	Fa...	Cat...	Fa...	Cat...	Fa...	C...	F...	C...	F...
4	1.0 D + 0....	Yes	Yes		1.5	DL	1	RLL		OL1	.6														
5	1.0 D + 0....	Yes	Yes		1.5	DL	1	RLL		OL2	.6														
6	1.0 D + 0....	Yes	Yes		1.5	DL	1	RLL		OL3	.6														
7	1.0 D + 0....	Yes	Yes		1.5	DL	1	RLL		OL4	.6														
8	1.0 D + 0....	Yes	Yes		1.5	DL	1	RLL	.75	OL1	.45														
9	1.0 D + 0....	Yes	Yes		1.5	DL	1	RLL	.75	OL2	.45														
10	1.0 D + 0....	Yes	Yes		1.5	DL	1	RLL	.75	OL3	.45														
11	1.0 D + 0....	Yes	Yes		1.5	DL	1	RLL	.75	OL4	.45														
12	0.9 D + 0....	Yes	Yes			DL	.9	RLL		OL1	.6														
13	0.9 D + 0....	Yes	Yes			DL	.9	RLL		OL2	.6														
14	0.9 D + 0....	Yes	Yes			DL	.9	RLL		OL3	.6														
15	0.9 D + 0....	Yes	Yes			DL	.9	RLL		OL4	.6														
16																									
17	LRFD Loa...																								
18	1.4 D	Yes				DL	1.4	RLL																	
19	1.2 D + 1....	Yes				DL	1.2	RLL	1.6	OL1	.5														
20	1.2 D + 1....	Yes				DL	1.2	RLL	1.6	OL2	.5														
21	1.2 D + 1....	Yes				DL	1.2	RLL	1.6	OL3	.5														
22	1.2 D + 1....	Yes				DL	1.2	RLL	1.6	OL4	.5														
23	1.2 D + 1....	Yes				DL	1.2	RLL		OL1	1														
24	1.2 D + 1....	Yes				DL	1.2	RLL		OL2	1														
25	1.2 D + 1....	Yes				DL	1.2	RLL		OL3	1														
26	1.2 D + 1....	Yes				DL	1.2	RLL		OL4	1														
27	1.0 D + 1....	Yes				DL	1	RLL		OL1	1														
28	1.0 D + 1....	Yes				DL	1	RLL		OL2	1														
29	1.0 D + 1....	Yes				DL	1	RLL		OL3	1														
30	1.0 D + 1....	Yes				DL	1	RLL		OL4	1														

Design Strips

	Label	Rebar Angle from Pl...	No. of Design Cuts	Design Rule
1	DS1	0	50	Typical
2	DS2	90	50	Typical

Load Categories

	Category	Point Loads	Line Loads	Area Loads
1	DL	25		
2	RLL	34		
3	OL1	49		
4	OL2	50		
5	OL3	49		
6	OL4	49		

Strip Reinforcing

	Label	UC Top	LC	Top Bars	Governing ...	UC Bot	LC	Bot B...	Gover...	UC Shear	LC	Governing De...
1	DS1	.008	21	#5@5in	DS1-X25	.008	28	#5@5in	DS1-...	.025	28	DS1-X15
2	DS2	0	27	#5@5in	DS2-X1	0	21	#5@5in	DS2-...	.005	21	DS2-X5

Slab Overturning Safety Factors (By Combination)

	LC	Slab	Angle[deg]	Mo-xx[lb-ft]	Ms-xx[lb-ft]	Mo-zz[lb-ft]	Ms-zz[lb-ft]	Ms-xx/Mo-xx	Ms-zz/Mo-zz
1	2	S1	0	0	50120.189	0	13749.188	9.999+	9.999+
2	2	S2	0	0	51329.802	0	14066.047	9.999+	9.999+
3	2	S3	0	0	51115.538	0	13988.281	9.999+	9.999+
4	2	S4	0	0	51149.85	0	14001.829	9.999+	9.999+
5	2	S5	0	0	51142.155	0	13998.468	9.999+	9.999+
6	2	S6	0	0	51149.83	0	14001.835	9.999+	9.999+

Slab Overturning Safety Factors (By Combination) (Continued)

	LC	Slab	Angle[deg]	Mo-xx[lb-ft]	Ms-xx[lb-ft]	Mo-zz[lb-ft]	Ms-zz[lb-ft]	Ms-xx/Mo-xx	Ms-zz/Mo-zz
7	2	S7	0	0	51115.628	0	13988.279	9.999+	9.999+
8	2	S8	0	0	51327.292	0	14076.234	9.999+	9.999+
9	2	S9	0	0	50167.476	0	13713.532	9.999+	9.999+
10	3	S1	0	0	53751.828	0	14814.349	9.999+	9.999+
11	3	S2	0	0	60086.874	0	16472.263	9.999+	9.999+
12	3	S3	0	0	59028.482	0	16141.427	9.999+	9.999+
13	3	S4	0	0	59194.666	0	16202.083	9.999+	9.999+
14	3	S5	0	0	59156.508	0	16186.197	9.999+	9.999+
15	3	S6	0	0	59194.709	0	16202.132	9.999+	9.999+
16	3	S7	0	0	59028.44	0	16134.31	9.999+	9.999+
17	3	S8	0	0	60074.875	0	16541.574	9.999+	9.999+
18	3	S9	0	0	53996.704	0	14626.203	9.999+	9.999+
19	4	S1	0	9737.054	50252.651	1164.998	13749.188	5.161	9.999+
20	4	S2	0	26244.269	51568.798	2956.4	14077.112	1.965	4.762
21	4	S3	0	22455.426	51173.942	2538.427	13988.281	2.279	5.511
22	4	S4	0	23209.207	51238.697	2603.154	14001.829	2.208	5.379
23	4	S5	0	23032.532	51221.82	2583.431	13998.468	2.224	5.419
24	4	S6	0	23204.917	51238.763	2605.544	14001.835	2.208	5.374
25	4	S7	0	22483.45	51173.833	2536.573	13988.279	2.276	5.515
26	4	S8	0	26153.71	51564.588	2952.802	14076.234	1.972	4.767
27	4	S9	0	10357.933	50302.072	1238.168	13765.272	4.856	9.999+
28	5	S1	0	10007.842	50252.651	926.608	13703.165	5.021	9.999+
29	5	S2	0	27294.435	51568.798	2502.352	14077.112	1.889	5.626
30	5	S3	0	23313.115	51173.942	2118.222	13988.281	2.195	6.604
31	5	S4	0	24083.815	51238.697	2180.369	14001.829	2.128	6.422
32	5	S5	0	23906.201	51221.82	2163.699	13998.468	2.143	6.47
33	5	S6	0	24078.628	51238.763	2183.464	14001.835	2.128	6.413
34	5	S7	0	23345.936	51173.833	2115.833	13988.279	2.192	6.611
35	5	S8	0	27192.803	51564.588	2498.69	14076.234	1.896	5.633
36	5	S9	0	10657.252	50302.072	974.486	13713.532	4.72	9.999+
37	6	S1	0	2010.018	50120.189	0	15127.228	9.999+	9.999+
38	6	S2	0	6050.045	51329.802	0	17465.606	8.484	9.999+
39	6	S3	0	4817.635	51115.538	0	16998.418	9.999+	9.999+
40	6	S4	0	5126.657	51149.85	0	17083.165	9.977	9.999+
41	6	S5	0	5066.228	51142.155	0	17062.206	9.999+	9.999+
42	6	S6	0	5122.748	51149.83	0	17091.895	9.985	9.999+
43	6	S7	0	4846.457	51115.628	0	16988.78	9.999+	9.999+
44	6	S8	0	5993.172	51327.292	0	17578.938	8.564	9.999+
45	6	S9	0	2174.436	50167.476	0	15031.718	9.999+	9.999+
46	7	S1	0	0	50200.449	0	15045.851	9.999+	9.999+
47	7	S2	0	785.783	51329.802	0	16997.563	9.999+	9.999+
48	7	S3	0	173.198	51115.538	0	16620.312	9.999+	9.999+
49	7	S4	0	365.141	51149.85	0	16689.164	9.999+	9.999+
50	7	S5	0	324.358	51142.155	0	16672.739	9.999+	9.999+
51	7	S6	0	362.757	51149.83	0	16696.48	9.999+	9.999+
52	7	S7	0	191.427	51115.628	0	16608.452	9.999+	9.999+
53	7	S8	0	749.554	51327.292	0	17109.287	9.999+	9.999+
54	7	S9	0	0	50212.499	0	14824.026	9.999+	9.999+
55	8	S1	0	7302.79	52804.024	873.748	14548.059	7.231	9.999+
56	8	S2	0	19683.202	58367.822	2217.3	15928.328	2.965	7.184
57	8	S3	0	16841.569	57028.529	1903.82	15603.141	3.386	8.196
58	8	S4	0	17406.905	57272.125	1952.365	15652.019	3.29	8.017
59	8	S5	0	17274.399	57209.399	1937.574	15639.265	3.312	8.072
60	8	S6	0	17403.688	57272.379	1954.158	15652.058	3.291	8.01
61	8	S7	0	16862.587	57028.022	1902.43	15603.036	3.382	8.202
62	8	S8	0	19615.283	58351.846	2214.602	15925.239	2.975	7.191
63	8	S9	0	7768.449	53008.597	928.626	14606.494	6.824	9.999+

Slab Overturning Safety Factors (By Combination) (Continued)

	LC	Slab	Angle[deg]	Mo-xx[lb-ft]	Ms-xx[lb-ft]	Mo-zz[lb-ft]	Ms-zz[lb-ft]	Ms-xx/Mo-xx	Ms-zz/Mo-zz
64	9	S1	0	7505.882	52804.024	694.956	14347.055	7.035	9.999+
65	9	S2	0	20470.826	58367.822	1876.764	15928.328	2.851	8.487
66	9	S3	0	17484.836	57028.529	1588.667	15603.141	3.262	9.822
67	9	S4	0	18062.861	57272.125	1635.277	15652.019	3.171	9.571
68	9	S5	0	17929.651	57209.399	1622.774	15639.265	3.191	9.637
69	9	S6	0	18058.971	57272.379	1637.598	15652.058	3.171	9.558
70	9	S7	0	17509.452	57028.022	1586.37	15597.802	3.257	9.832
71	9	S8	0	20394.602	58351.846	1874.017	15925.239	2.861	8.498
72	9	S9	0	7992.939	53008.597	730.864	14398.036	6.632	9.999+
73	10	S1	0	1507.513	52843.918	0	15581.589	9.999+	9.999+
74	10	S2	0	4537.534	57897.606	0	18420.378	9.999+	9.999+
75	10	S3	0	3613.226	57050.246	0	17860.743	9.999+	9.999+
76	10	S4	0	3844.993	57183.462	0	17963.021	9.999+	9.999+
77	10	S5	0	3799.671	57152.919	0	17937.068	9.999+	9.999+
78	10	S6	0	3842.061	57183.489	0	17969.603	9.999+	9.999+
79	10	S7	0	3634.843	57050.237	0	17848.178	9.999+	9.999+
80	10	S8	0	4494.879	57887.979	0	18552.267	9.999+	9.999+
81	10	S9	0	1630.827	53039.397	0	15386.675	9.999+	9.999+
82	11	S1	0	0	52904.113	0	15520.556	9.999+	9.999+
83	11	S2	0	589.337	57897.606	0	18069.346	9.999+	9.999+
84	11	S3	0	129.899	57050.246	0	17577.164	9.999+	9.999+
85	11	S4	0	273.856	57183.462	0	17667.521	9.999+	9.999+
86	11	S5	0	243.269	57152.919	0	17644.968	9.999+	9.999+
87	11	S6	0	272.068	57183.489	0	17673.041	9.999+	9.999+
88	11	S7	0	143.57	57050.237	0	17562.932	9.999+	9.999+
89	11	S8	0	562.166	57887.979	0	18200.029	9.999+	9.999+
90	11	S9	0	0	53073.164	0	15230.906	9.999+	9.999+
91	12	S1	0	9737.054	45227.386	1164.998	12374.27	4.645	9.999+
92	12	S2	0	26244.269	46411.918	2956.4	12669.401	1.768	4.285
93	12	S3	0	22455.426	46056.547	2538.427	12589.453	2.051	4.96
94	12	S4	0	23209.207	46114.827	2603.154	12601.646	1.987	4.841
95	12	S5	0	23032.532	46099.638	2583.431	12598.622	2.002	4.877
96	12	S6	0	23204.917	46114.887	2605.544	12601.651	1.987	4.836
97	12	S7	0	22483.45	46056.45	2536.573	12589.451	2.048	4.963
98	12	S8	0	26153.71	46408.129	2952.802	12668.611	1.774	4.29
99	12	S9	0	10357.933	45271.865	1238.168	12388.745	4.371	9.999+
100	13	S1	0	10007.842	45227.386	926.608	12332.849	4.519	9.999+
101	13	S2	0	27294.435	46411.918	2502.352	12669.401	1.7	5.063
102	13	S3	0	23313.115	46056.547	2118.222	12589.453	1.976	5.943
103	13	S4	0	24083.815	46114.827	2180.369	12601.646	1.915	5.78
104	13	S5	0	23906.201	46099.638	2163.699	12598.622	1.928	5.823
105	13	S6	0	24078.628	46114.887	2183.464	12601.651	1.915	5.771
106	13	S7	0	23345.936	46056.45	2115.833	12589.451	1.973	5.95
107	13	S8	0	27192.803	46408.129	2498.69	12668.611	1.707	5.07
108	13	S9	0	10657.252	45271.865	974.486	12342.179	4.248	9.999+
109	14	S1	0	2010.018	45108.17	0	13752.309	9.999+	9.999+
110	14	S2	0	6050.045	46196.822	0	16059.001	7.636	9.999+
111	14	S3	0	4817.635	46003.984	0	15599.59	9.549	9.999+
112	14	S4	0	5126.657	46034.865	0	15682.982	8.98	9.999+
113	14	S5	0	5066.228	46027.939	0	15662.359	9.085	9.999+
114	14	S6	0	5122.748	46034.847	0	15691.711	8.986	9.999+
115	14	S7	0	4846.457	46004.066	0	15589.952	9.492	9.999+
116	14	S8	0	5993.172	46194.562	0	16171.315	7.708	9.999+
117	14	S9	0	2174.436	45150.728	0	13660.365	9.999+	9.999+
118	15	S1	0	0	45188.43	0	13670.932	9.999+	9.999+
119	15	S2	0	785.783	46196.822	0	15590.958	9.999+	9.999+
120	15	S3	0	173.198	46003.984	0	15221.484	9.999+	9.999+

Slab Overturning Safety Factors (By Combination) (Continued)

	LC	Slab	Angle[deg]	Mo-xx[lb-ft]	Ms-xx[lb-ft]	Mo-zz[lb-ft]	Ms-zz[lb-ft]	Ms-xx/Mo-xx	Ms-zz/Mo-zz
121	15	S4	0	365.141	46034.865	0	15288.981	9.999+	9.999+
122	15	S5	0	324.358	46027.939	0	15272.892	9.999+	9.999+
123	15	S6	0	362.757	46034.847	0	15296.296	9.999+	9.999+
124	15	S7	0	191.427	46004.066	0	15209.624	9.999+	9.999+
125	15	S8	0	749.554	46194.562	0	15701.664	9.999+	9.999+
126	15	S9	0	0	45195.751	0	13452.673	9.999+	9.999+

Slab Sliding Safety Factors (By Combination)

	LC	Slab	Angle[deg]	Va-xx[lb]	Vr-xx[lb]	Va-zz[lb]	Vr-zz[lb]	SR-xx	SR-zz
1	2	S1	0	8.629	3088.39	0	3088.39	9.999+	9.999+
2	2	S2	0	2.075	3166.105	1.171	3166.105	9.999+	9.999+
3	2	S3	0	0	3147.363	0	3147.363	9.999+	9.999+
4	2	S4	0	0	3150.411	0	3150.411	9.999+	9.999+
5	2	S5	0	0	3149.655	0	3149.655	9.999+	9.999+
6	2	S6	0	0	3150.413	0	3150.413	9.999+	9.999+
7	2	S7	0	0	3147.363	0	3147.363	9.999+	9.999+
8	2	S8	0	2.09	3165.899	1.21	3165.899	9.999+	9.999+
9	2	S9	0	9.701	3091.365	0	3091.365	9.999+	9.999+
10	3	S1	0	47.375	3304.804	3.272	3304.804	9.999+	9.999+
11	3	S2	0	13.713	3714.487	6.134	3714.487	9.999+	9.999+
12	3	S3	0	1.326	3631.026	2.2	3631.026	9.999+	9.999+
13	3	S4	0	0	3645.469	0	3645.469	9.999+	9.999+
14	3	S5	0	0	3641.894	0	3641.894	9.999+	9.999+
15	3	S6	0	0	3645.48	0	3645.48	9.999+	9.999+
16	3	S7	0	1.309	3631.005	2.215	3631.005	9.999+	9.999+
17	3	S8	0	13.914	3713.506	6.324	3713.506	9.999+	9.999+
18	3	S9	0	48.881	3320.224	3.256	3320.224	9.999+	9.999+
19	4	S1	0	12.824	2839.137	569.624	2839.137	9.999+	4.984
20	4	S2	0	14.976	2511.146	1551.272	2511.146	9.999+	1.619
21	4	S3	0	2.076	2577.463	1316.895	2577.463	9.999+	1.957
22	4	S4	0	.929	2565.259	1367.318	2565.259	9.999+	1.876
23	4	S5	0	0	2568.383	1355.798	2568.383	9.999+	1.894
24	4	S6	0	1.878	2565.292	1366.948	2565.292	9.999+	1.877
25	4	S7	0	1.179	2577.341	1319.395	2577.341	9.999+	1.953
26	4	S8	0	15.818	2512.263	1544.93	2512.263	9.999+	1.626
27	4	S9	0	14.283	2827.168	606.408	2827.168	9.999+	4.662
28	5	S1	0	19.438	2886.388	475.615	2886.388	9.999+	6.069
29	5	S2	0	9.88	2610.249	1299.905	2610.249	9.999+	2.008
30	5	S3	0	1.27	2671.525	1102.343	2671.525	9.999+	2.423
31	5	S4	0	.637	2660.211	1144.022	2660.211	9.999+	2.325
32	5	S5	0	.63	2663.201	1135.28	2663.201	9.999+	2.346
33	5	S6	0	1.864	2660.252	1143.557	2660.252	9.999+	2.326
34	5	S7	0	.126	2671.376	1105.355	2671.376	9.999+	2.417
35	5	S8	0	10.885	2611.479	1292.916	2611.479	9.999+	2.02
36	5	S9	0	17.238	2876.628	507.38	2876.628	9.999+	5.67
37	6	S1	0	33.107	3383.762	675.49	3383.762	9.999+	5.009
38	6	S2	0	22.218	3943.092	1842.304	3943.092	9.999+	2.14
39	6	S3	0	2.438	3823.181	1561.738	3823.181	9.999+	2.448
40	6	S4	0	1.097	3844.37	1621.518	3844.37	9.999+	2.371
41	6	S5	0	0	3838.996	1607.886	3838.996	9.999+	2.388
42	6	S6	0	2.237	3844.334	1621.075	3844.334	9.999+	2.371
43	6	S7	0	1.418	3823.326	1564.733	3823.326	9.999+	2.443
44	6	S8	0	23.261	3941.304	1834.811	3941.304	9.999+	2.148
45	6	S9	0	37.22	3404.468	719.146	3404.468	9.999+	4.734
46	7	S1	0	55.448	3352.048	590.586	3352.048	9.999+	5.676
47	7	S2	0	21.707	3837.476	1606.601	3837.476	9.999+	2.389

Slab Sliding Safety Factors (By Combination) (Continued)

	LC	Slab	Angle[deg]	Va-xx[lb]	Vr-xx[lb]	Va-zz[lb]	Vr-zz[lb]	SR-xx	SR-zz
48	7	S3	0	2.212	3738.243	1362.976	3738.243	9.999+	2.743
49	7	S4	0	1.082	3755.711	1415.616	3755.711	9.999+	2.653
50	7	S5	0	0	3751.366	1402.921	3751.366	9.999+	2.674
51	7	S6	0	1.694	3755.691	1415.366	3755.691	9.999+	2.654
52	7	S7	0	2.376	3738.327	1364.776	3738.327	9.999+	2.739
53	7	S8	0	22.35	3836.18	1601.548	3836.18	9.999+	2.395
54	7	S9	0	58.153	3370.297	627.824	3370.297	9.999+	5.368
55	8	S1	0	21.599	3063.761	429.671	3063.761	9.999+	7.13
56	8	S2	0	1.985	3086.172	1159.439	3086.172	9.999+	2.662
57	8	S3	0	.563	3082.685	989.321	3082.685	9.999+	3.116
58	8	S4	0	.697	3082.84	1025.489	3082.84	9.999+	3.006
59	8	S5	0	0	3082.881	1016.848	3082.881	9.999+	3.032
60	8	S6	0	1.409	3082.873	1025.211	3082.873	9.999+	3.007
61	8	S7	0	.097	3082.578	991.207	3082.578	9.999+	3.11
62	8	S8	0	2.473	3086.377	1154.559	3086.377	9.999+	2.673
63	8	S9	0	21.098	3064.862	457.248	3064.862	9.999+	6.703
64	9	S1	0	45.795	3099.199	359.165	3099.199	9.999+	8.629
65	9	S2	0	1.838	3160.499	970.914	3160.499	9.999+	3.255
66	9	S3	0	.042	3153.232	828.407	3153.232	9.999+	3.806
67	9	S4	0	.478	3154.054	858.017	3154.054	9.999+	3.676
68	9	S5	0	.473	3153.994	851.46	3153.994	9.999+	3.704
69	9	S6	0	1.398	3154.092	857.668	3154.092	9.999+	3.678
70	9	S7	0	.887	3153.104	830.678	3153.104	9.999+	3.796
71	9	S8	0	1.226	3160.789	965.549	3160.789	9.999+	3.274
72	9	S9	0	44.738	3101.957	382.978	3101.957	9.999+	8.1
73	10	S1	0	56.047	3472.23	504.164	3472.23	9.999+	6.887
74	10	S2	0	25.911	4160.132	1385.743	4160.132	9.999+	3.002
75	10	S3	0	2.823	4016.974	1169.653	4016.974	9.999+	3.434
76	10	S4	0	.823	4042.174	1216.139	4042.174	9.999+	3.324
77	10	S5	0	0	4035.84	1205.915	4035.84	9.999+	3.347
78	10	S6	0	1.678	4042.154	1215.806	4042.154	9.999+	3.325
79	10	S7	0	2.045	4017.067	1171.889	4017.067	9.999+	3.428
80	10	S8	0	26.836	4158.158	1380.246	4158.158	9.999+	3.013
81	10	S9	0	59.725	3497.837	536.917	3497.837	9.999+	6.515
82	11	S1	0	72.802	3448.444	440.486	3448.444	9.999+	7.829
83	11	S2	0	25.528	4080.919	1208.966	4080.919	9.999+	3.376
84	11	S3	0	2.653	3953.27	1020.581	3953.27	9.999+	3.874
85	11	S4	0	.812	3975.679	1061.712	3975.679	9.999+	3.745
86	11	S5	0	0	3970.118	1052.191	3970.118	9.999+	3.773
87	11	S6	0	1.271	3975.672	1061.525	3975.672	9.999+	3.745
88	11	S7	0	2.764	3953.318	1021.921	3953.318	9.999+	3.869
89	11	S8	0	26.153	4079.315	1205.299	4079.315	9.999+	3.384
90	11	S9	0	75.425	3472.209	468.426	3472.209	9.999+	7.413
91	12	S1	0	13.687	2530.298	569.624	2530.298	9.999+	4.442
92	12	S2	0	15.184	2194.536	1551.389	2194.536	9.999+	1.415
93	12	S3	0	2.076	2262.727	1316.895	2262.727	9.999+	1.718
94	12	S4	0	.929	2250.218	1367.318	2250.218	9.999+	1.646
95	12	S5	0	0	2253.418	1355.798	2253.418	9.999+	1.662
96	12	S6	0	1.878	2250.251	1366.948	2250.251	9.999+	1.646
97	12	S7	0	1.179	2262.605	1319.395	2262.605	9.999+	1.715
98	12	S8	0	16.027	2195.673	1545.051	2195.673	9.999+	1.421
99	12	S9	0	15.253	2518.032	606.408	2518.032	9.999+	4.152
100	13	S1	0	18.575	2577.549	475.615	2577.549	9.999+	5.419
101	13	S2	0	10.087	2293.638	1300.022	2293.638	9.999+	1.764
102	13	S3	0	1.27	2356.789	1102.343	2356.789	9.999+	2.138
103	13	S4	0	.637	2345.17	1144.022	2345.17	9.999+	2.05
104	13	S5	0	.63	2348.236	1135.28	2348.236	9.999+	2.068

Slab Sliding Safety Factors (By Combination) (Continued)

	LC	Slab	Angle[deg]	Va-xx[lb]	Vr-xx[lb]	Va-zz[lb]	Vr-zz[lb]	SR-xx	SR-zz
105	13	S6	0	1.864	2345.211	1143.557	2345.211	9.999+	2.051
106	13	S7	0	.126	2356.64	1105.355	2356.64	9.999+	2.132
107	13	S8	0	11.094	2294.889	1293.037	2294.889	9.999+	1.775
108	13	S9	0	16.268	2567.491	507.38	2567.491	9.999+	5.06
109	14	S1	0	32.244	3074.923	675.49	3074.923	9.999+	4.552
110	14	S2	0	22.011	3626.482	1842.187	3626.482	9.999+	1.969
111	14	S3	0	2.438	3508.445	1561.738	3508.445	9.999+	2.247
112	14	S4	0	1.097	3529.329	1621.518	3529.329	9.999+	2.177
113	14	S5	0	0	3524.031	1607.886	3524.031	9.999+	2.192
114	14	S6	0	2.237	3529.293	1621.075	3529.293	9.999+	2.177
115	14	S7	0	1.418	3508.59	1564.733	3508.59	9.999+	2.242
116	14	S8	0	23.052	3624.715	1834.69	3624.715	9.999+	1.976
117	14	S9	0	36.25	3095.332	719.146	3095.332	9.999+	4.304
118	15	S1	0	54.585	3043.209	590.586	3043.209	9.999+	5.153
119	15	S2	0	21.499	3520.865	1606.484	3520.865	9.999+	2.192
120	15	S3	0	2.212	3423.507	1362.976	3423.507	9.999+	2.512
121	15	S4	0	1.082	3440.67	1415.616	3440.67	9.999+	2.431
122	15	S5	0	0	3436.401	1402.921	3436.401	9.999+	2.449
123	15	S6	0	1.694	3440.65	1415.366	3440.65	9.999+	2.431
124	15	S7	0	2.376	3423.591	1364.776	3423.591	9.999+	2.509
125	15	S8	0	22.141	3519.59	1601.427	3519.59	9.999+	2.198
126	15	S9	0	57.182	3061.161	627.824	3061.161	9.999+	4.876

Envelope Slab Soil Pressures

	Label	UC	LC	Soil Pressure[psf]	Allowable Bearing[psf]	Point
1	S1	.368	6	551.843	1500	N258
2	S2	.552	6	828.34	1500	N265
3	S3	.508	6	761.403	1500	N272
4	S4	.517	6	774.799	1500	N279
5	S5	.514	6	771.7	1500	N286
6	S6	.516	6	774.718	1500	N293
7	S7	.508	6	761.958	1500	N300
8	S8	.551	6	826.637	1500	N307
9	S9	.375	6	562.336	1500	N314

1.Project information

Customer company:
Customer contact name:
Customer e-mail:
Comment:

Project description:
Location:
Fastening description:

2. Input Data & Anchor Parameters

General
Design method:ACI 318-14
Units: Imperial units

Anchor Information:
Anchor type: Bonded anchor
Material: F1554 Grade 36
Diameter (inch): 0.375
Effective Embedment depth, h_{ef} (inch): 4.000
Code report: ICC-ES ESR-4057
Anchor category: -
Anchor ductility: Yes
h_{min} (inch): 5.25
c_{ac} (inch): 7.12
C_{min} (inch): 1.75
S_{min} (inch): 3.00

Base Material
Concrete: Normal-weight
Concrete thickness, h (inch): 33.00
State: Cracked
Compressive strength, f'_c (psi): 2500
$\Psi_{c,V}$: 1.0
Reinforcement condition: B tension, B shear
Supplemental reinforcement: Not applicable
Reinforcement provided at corners: No
Ignore concrete breakout in tension: No
Ignore concrete breakout in shear: No
Hole condition: Dry concrete
Inspection: Periodic
Temperature range, Short/Long: 150/110°F
Ignore 6do requirement: Not applicable
Build-up grout pad: No

Base Plate
Length x Width x Thickness (inch): 4.75 x 4.75 x 0.31

Recommended Anchor
Anchor Name: SET-3G - SET-3G w/ 3/8"Ø F1554 Gr. 36
Code Report: ICC-ES ESR-4057

Load and Geometry
Load factor source: ACI 318 Section 5.3
Load combination: not set
Seismic design: No
Anchors subjected to sustained tension: No
Apply entire shear load at front row: No
Anchors only resisting wind and/or seismic loads: No

Strength level loads:

N_{ua} [lb]: 4819
V_{uax} [lb]: 250
V_{uay} [lb]: -3198
M_{ux} [ft-lb]: 0
M_{uy} [ft-lb]: 0
M_{uz} [ft-lb]: 0

<Figure 1>

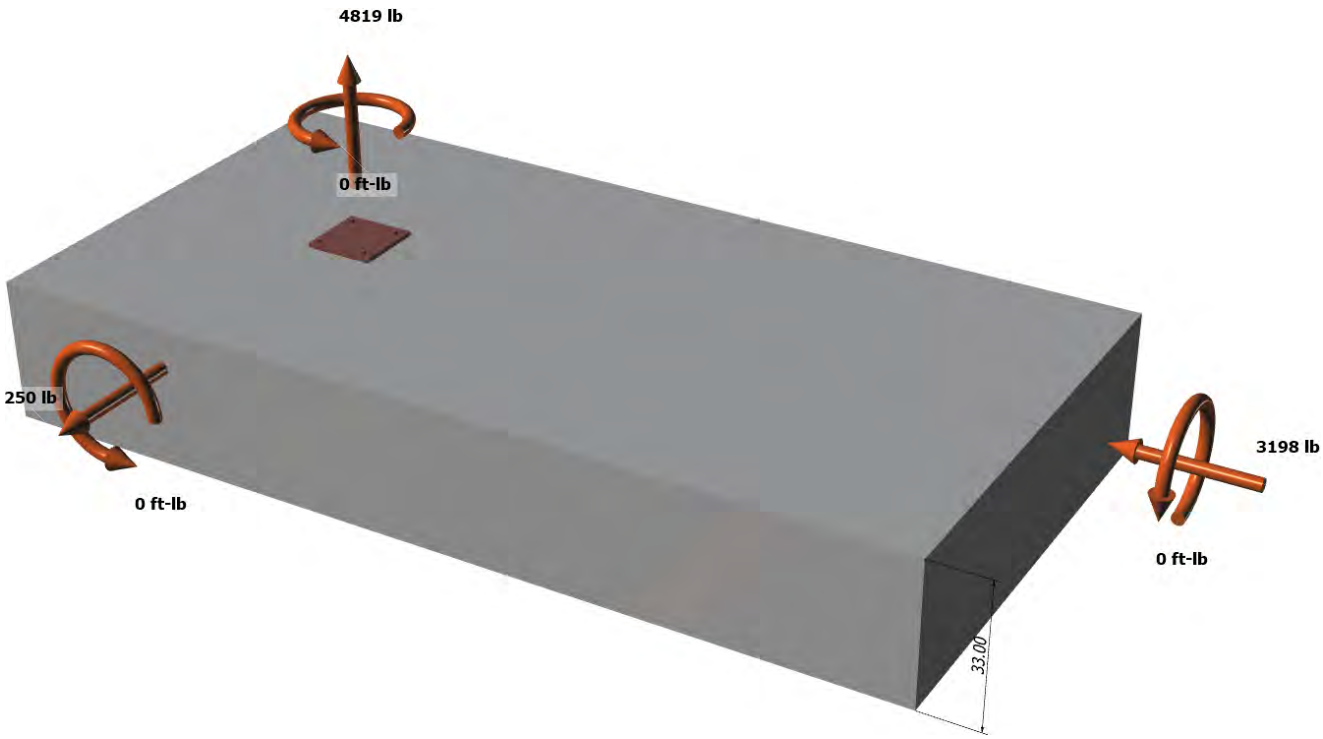

<Figure 2>

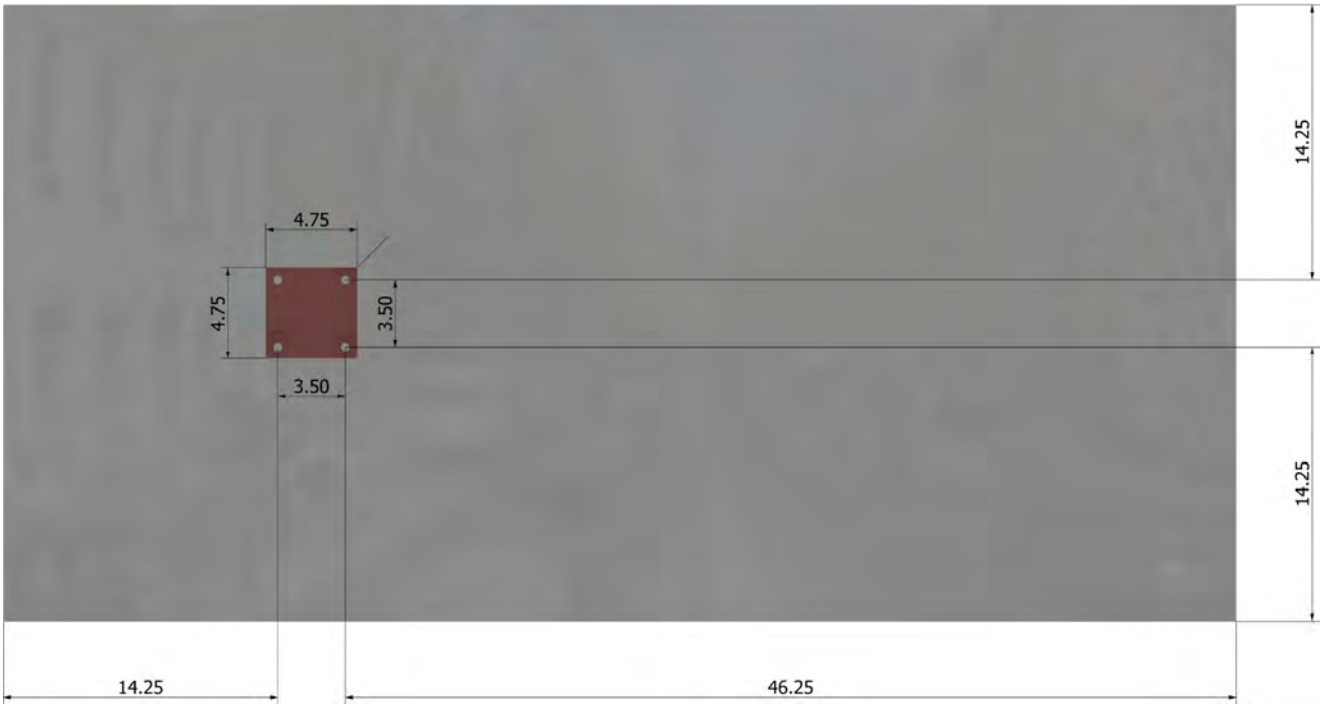

3. Resulting Anchor Forces

Anchor	Tension load, N_{ua} (lb)	Shear load x, V_{uax} (lb)	Shear load y, V_{uay} (lb)	Shear load combined, $\sqrt{(V_{uax})^2+(V_{uay})^2}$ (lb)
1	1204.8	62.5	-799.5	801.9
2	1204.8	62.5	-799.5	801.9
3	1204.8	62.5	-799.5	801.9
4	1204.8	62.5	-799.5	801.9
Sum	4819.0	250.0	-3198.0	3207.8

Maximum concrete compression strain (‰): 0.00
Maximum concrete compression stress (psi): 0
Resultant tension force (lb): 4819
Resultant compression force (lb): 0
Eccentricity of resultant tension forces in x-axis, e'_{Nx} (inch): 0.00
Eccentricity of resultant tension forces in y-axis, e'_{Ny} (inch): 0.00
Eccentricity of resultant shear forces in x-axis, e'_{Vx} (inch): 0.00
Eccentricity of resultant shear forces in y-axis, e'_{Vy} (inch): 0.00

<Figure 3>

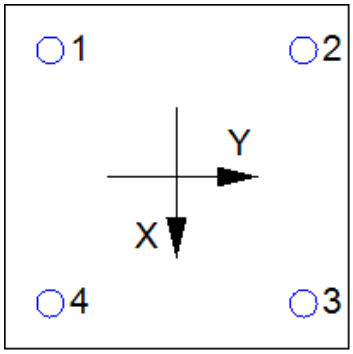

4. Steel Strength of Anchor in Tension (Sec. 17.4.1)

N_{sa} (lb)	ϕ	ϕN_{sa} (lb)
4525	0.75	3394

5. Concrete Breakout Strength of Anchor in Tension (Sec. 17.4.2)

$N_b = k_c \lambda_a \sqrt{f'_c} h_{ef}^{1.5}$ (Eq. 17.4.2.2a)

k_c	λ_a	f'_c (psi)	h_{ef} (in)	N_b (lb)
17.0	1.00	2500	4.000	6800

$\phi N_{cbg} = \phi (A_{Nc} / A_{Nco}) \Psi_{ec,N} \Psi_{ed,N} \Psi_{c,N} \Psi_{cp,N} N_b$ (Sec. 17.3.1 & Eq. 17.4.2.1b)

A_{Nc} (in^2)	A_{Nco} (in^2)	$c_{a,min}$ (in)	$\Psi_{ec,N}$	$\Psi_{ed,N}$	$\Psi_{c,N}$	$\Psi_{cp,N}$	N_b (lb)	ϕ	ϕN_{cbg} (lb)
240.25	144.00	14.25	1.000	1.000	1.00	1.000	6800	0.65	7374

6. Adhesive Strength of Anchor in Tension (Sec. 17.4.5)

$\tau_{k,cr} = \tau_{k,cr} f_{short\text{-}term} K_{sat} (f'_c / 2{,}500)^n$

$\tau_{k,cr}$ (psi)	$f_{short\text{-}term}$	K_{sat}	f'_c (psi)	n	$\tau_{k,cr}$ (psi)
1346	1.00	1.00	2500	0.24	1346

$N_{ba} = \lambda_a \tau_{cr} \pi d_a h_{ef}$ (Eq. 17.4.5.2)

λ_a	τ_{cr} (psi)	d_a (in)	h_{ef} (in)	N_{ba} (lb)
1.00	1346	0.38	4.000	6343

$\phi N_{ag} = \phi (A_{Na} / A_{Na0}) \Psi_{ec,Na} \Psi_{ed,Na} \Psi_{cp,Na} N_{ba}$ (Sec. 17.3.1 & Eq. 17.4.5.1b)

A_{Na} (in^2)	A_{Na0} (in^2)	c_{Na} (in)	$c_{a,min}$ (in)	$\Psi_{ec,Na}$	$\Psi_{ed,Na}$	$\Psi_{cp,Na}$	N_{ba}(lb)	ϕ	ϕN_{ag} (lb)
198.45	112.09	5.29	14.25	1.000	1.000	1.000	6343	0.55	6176

8. Steel Strength of Anchor in Shear (Sec. 17.5.1)

V_{sa} (lb)	ϕ_{grout}	ϕ	$\phi_{grout}\phi V_{sa}$ (lb)
2715	1.0	0.65	1765

9. Concrete Breakout Strength of Anchor in Shear (Sec. 17.5.2)

Shear perpendicular to edge in x-direction:

$V_{bx} = \min|7(l_e / d_a)^{0.2}\sqrt{d_a}\lambda_a\sqrt{f'_c}c_{a1}^{1.5};\ 9\lambda_a\sqrt{f'_c}c_{a1}^{1.5}|$ (Eq. 17.5.2.2a & Eq. 17.5.2.2b)

l_e (in)	d_a (in)	λ_a	f'_c (psi)	c_{a1} (in)	V_{bx} (lb)
3.00	0.375	1.00	2500	17.75	24294

$\phi V_{cbgx} = \phi\,(A_{Vc} / A_{Vco})\Psi_{ec,V}\Psi_{ed,V}\Psi_{c,V}\Psi_{h,V}V_{bx}$ (Sec. 17.3.1 & Eq. 17.5.2.1b)

A_{Vc} (in^2)	A_{Vco} (in^2)	$\Psi_{ec,V}$	$\Psi_{ed,V}$	$\Psi_{c,V}$	$\Psi_{h,V}$	V_{bx} (lb)	ϕ	ϕV_{cbgx} (lb)
1181.48	1417.78	1.000	0.861	1.000	1.000	24294	0.70	12195

Shear perpendicular to edge in y-direction:

$V_{by} = \min|7(l_e / d_a)^{0.2}\sqrt{d_a}\lambda_a\sqrt{f'_c}c_{a1}^{1.5};\ 9\lambda_a\sqrt{f'_c}c_{a1}^{1.5}|$ (Eq. 17.5.2.2a & Eq. 17.5.2.2b)

l_e (in)	d_a (in)	λ_a	f'_c (psi)	c_{a1} (in)	V_{by} (lb)
3.00	0.375	1.00	2500	17.75	24294

$\phi V_{cbgy} = \phi\,(A_{Vc} / A_{Vco})\Psi_{ec,V}\Psi_{ed,V}\Psi_{c,V}\Psi_{h,V}V_{by}$ (Sec. 17.3.1 & Eq. 17.5.2.1b)

A_{Vc} (in^2)	A_{Vco} (in^2)	$\Psi_{ec,V}$	$\Psi_{ed,V}$	$\Psi_{c,V}$	$\Psi_{h,V}$	V_{by} (lb)	ϕ	ϕV_{cbgy} (lb)
852.00	1417.78	1.000	0.861	1.000	1.000	24294	0.70	8794

Shear parallel to edge in x-direction:

$V_{by} = \min|7(l_e / d_a)^{0.2}\sqrt{d_a}\lambda_a\sqrt{f'_c}c_{a1}^{1.5};\ 9\lambda_a\sqrt{f'_c}c_{a1}^{1.5}|$ (Eq. 17.5.2.2a & Eq. 17.5.2.2b)

l_e (in)	d_a (in)	λ_a	f'_c (psi)	c_{a1} (in)	V_{by} (lb)
3.00	0.375	1.00	2500	14.25	17475

$\phi V_{cbgx} = \phi\,(2)(A_{Vc} / A_{Vco})\Psi_{ec,V}\Psi_{ed,V}\Psi_{c,V}\Psi_{h,V}V_{by}$ (Sec. 17.3.1, 17.5.2.1(c) & Eq. 17.5.2.1b)

A_{Vc} (in^2)	A_{Vco} (in^2)	$\Psi_{ec,V}$	$\Psi_{ed,V}$	$\Psi_{c,V}$	$\Psi_{h,V}$	V_{by} (lb)	ϕ	ϕV_{cbgx} (lb)
684.00	913.78	1.000	1.000	1.000	1.000	17475	0.70	18313

Shear parallel to edge in y-direction:

$V_{bx} = \min|7(l_e / d_a)^{0.2}\sqrt{d_a}\lambda_a\sqrt{f'_c}c_{a1}^{1.5};\ 9\lambda_a\sqrt{f'_c}c_{a1}^{1.5}|$ (Eq. 17.5.2.2a & Eq. 17.5.2.2b)

l_e (in)	d_a (in)	λ_a	f'_c (psi)	c_{a1} (in)	V_{bx} (lb)
3.00	0.375	1.00	2500	14.25	17475

$\phi V_{cbgy} = \phi\,(2)(A_{Vc} / A_{Vco})\Psi_{ec,V}\Psi_{ed,V}\Psi_{c,V}\Psi_{h,V}V_{bx}$ (Sec. 17.3.1, 17.5.2.1(c) & Eq. 17.5.2.1b)

A_{Vc} (in^2)	A_{Vco} (in^2)	$\Psi_{ec,V}$	$\Psi_{ed,V}$	$\Psi_{c,V}$	$\Psi_{h,V}$	V_{bx} (lb)	ϕ	ϕV_{cbgy} (lb)
836.30	913.78	1.000	1.000	1.000	1.000	17475	0.70	22391

10. Concrete Pryout Strength of Anchor in Shear (Sec. 17.5.3)

$\phi V_{cpg} = \phi \min|k_{cp}N_{ag}\ ;\ k_{cp}N_{cbg}| = \phi \min|k_{cp}(A_{Na} / A_{Na0})\Psi_{ec,Na}\Psi_{ed,Na}\Psi_{cp,Na}N_{ba}\ ;\ k_{cp}(A_{Nc} / A_{Nco})\Psi_{ec,N}\Psi_{ed,N}\Psi_{c,N}\Psi_{cp,N}N_b|$ (Sec. 17.3.1 & Eq. 17.5.3.1b)

k_{cp}	A_{Na} (in^2)	A_{Na0} (in^2)	$\Psi_{ed,Na}$	$\Psi_{ec,Na}$	$\Psi_{cp,Na}$	N_{ba} (lb)	N_a (lb)
2.0	198.45	112.09	1.000	1.000	1.000	6343	11230

A_{Nc} (in^2)	A_{Nco} (in^2)	$\Psi_{ec,N}$	$\Psi_{ed,N}$	$\Psi_{c,N}$	$\Psi_{cp,N}$	N_b (lb)	N_{cb} (lb)	ϕ
240.25	144.00	1.000	1.000	1.000	1.000	6800	11345	0.70

ϕV_{cpg} (lb)
15722

11. Results

Interaction of Tensile and Shear Forces (Sec. R17.6)

Tension	Factored Load, N_{ua} (lb)	Design Strength, ϕN_n (lb)	Ratio	Status
Steel	1205	3394	0.35	Pass
Concrete breakout	4819	7374	0.65	Pass
Adhesive	**4819**	**6176**	**0.78**	**Pass (Governs)**

Shear	Factored Load, V_{ua} (lb)	Design Strength, ϕV_n (lb)	Ratio	Status
Steel	**802**	**1765**	**0.45**	**Pass (Governs)**
T Concrete breakout x+	250	12195	0.02	Pass
T Concrete breakout y-	3198	8794	0.36	Pass
|| Concrete breakout y-	125	18313	0.01	Pass
|| Concrete breakout x-	1599	22391	0.07	Pass
Concrete breakout, combined	-	-	0.36	Pass
Pryout	3208	15722	0.20	Pass

Interaction check	$(N_{ua}/\phi N_{ua})^{5/3}$	$(V_{ua}/\phi V_{ua})^{5/3}$	Combined Ratio	Permissible	Status
Sec. R17.6	0.66	0.27	93.0%	1.0	Pass

SET-3G w/ 3/8"Ø F1554 Gr. 36 with hef = 4.000 inch meets the selected design criteria.

12. Warnings

- Designer must exercise own judgement to determine if this design is suitable.

- Refer to manufacturer's product literature for hole cleaning and installation instructions.

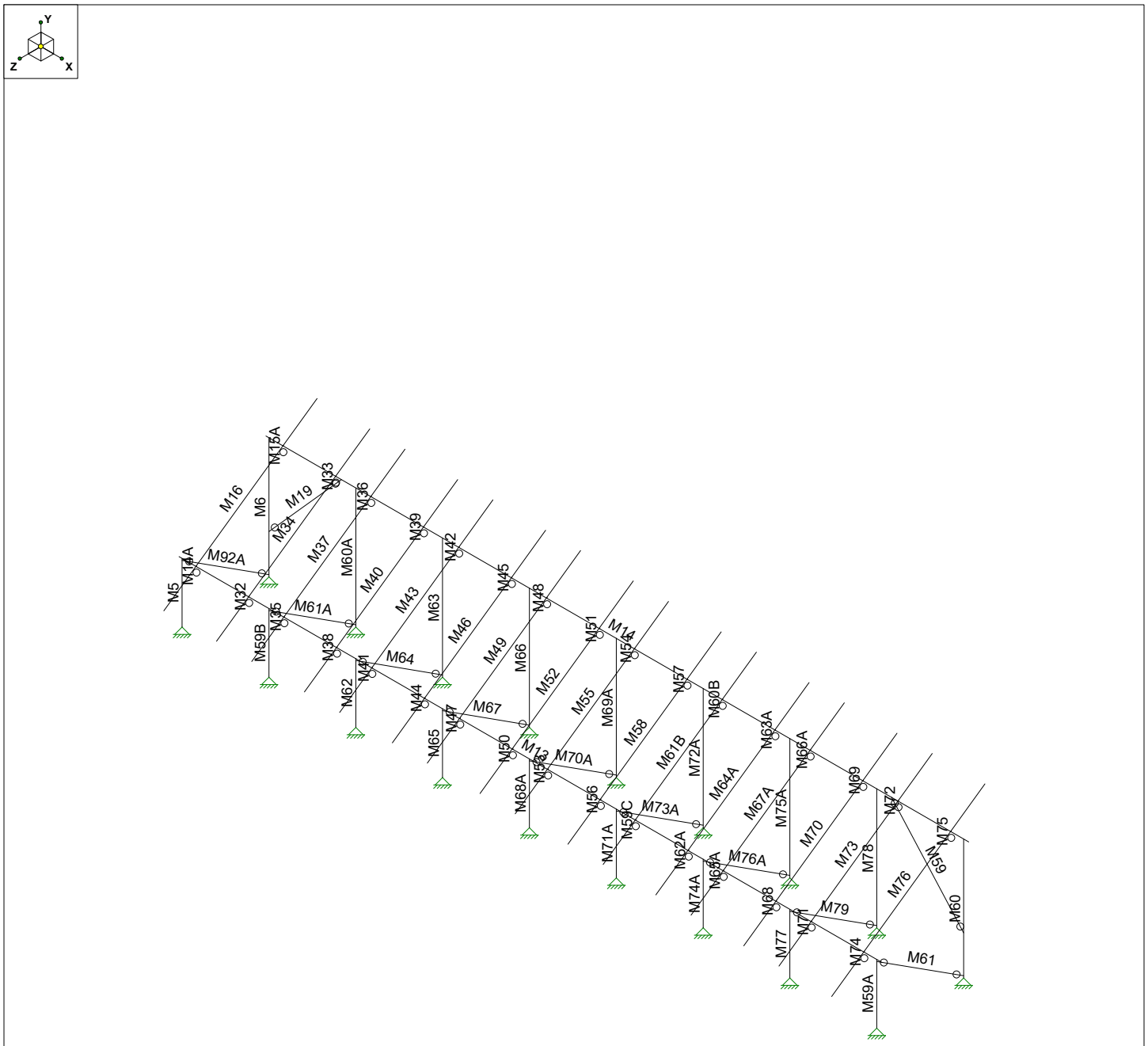

Vector Structural Engineeri...		SK - 3
STB	Ground Mount	Apr 6, 2021 at 9:54 AM
U2716-0218-201		Sunmodo Sunturf A8 v3 85x45.r3d

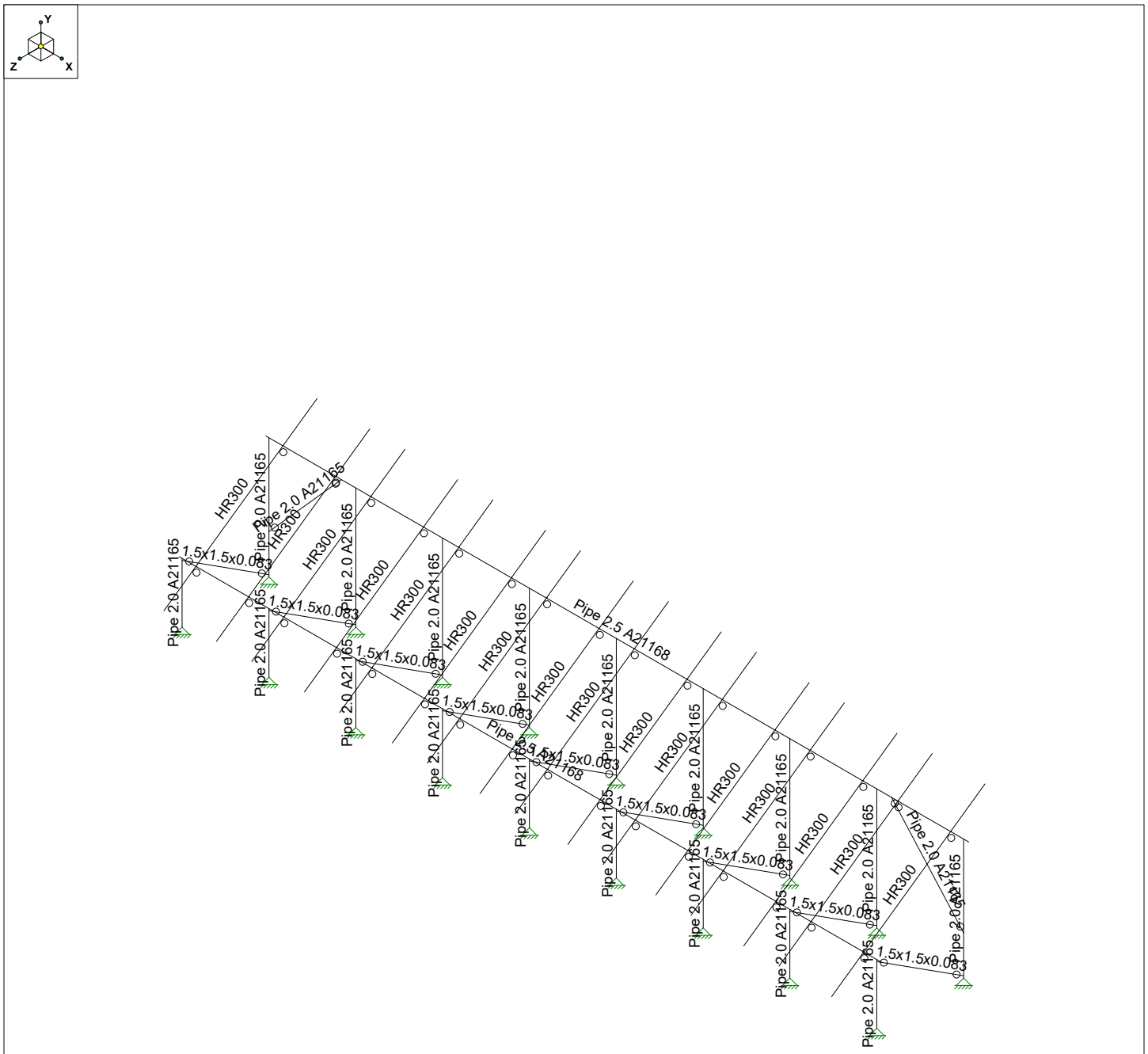

Vector Structural Engineeri...		SK - 4
STB	Ground Mount	Apr 6, 2021 at 9:54 AM
U2716-0218-201		Sunmodo Sunturf A8 v3 85x45.r3d

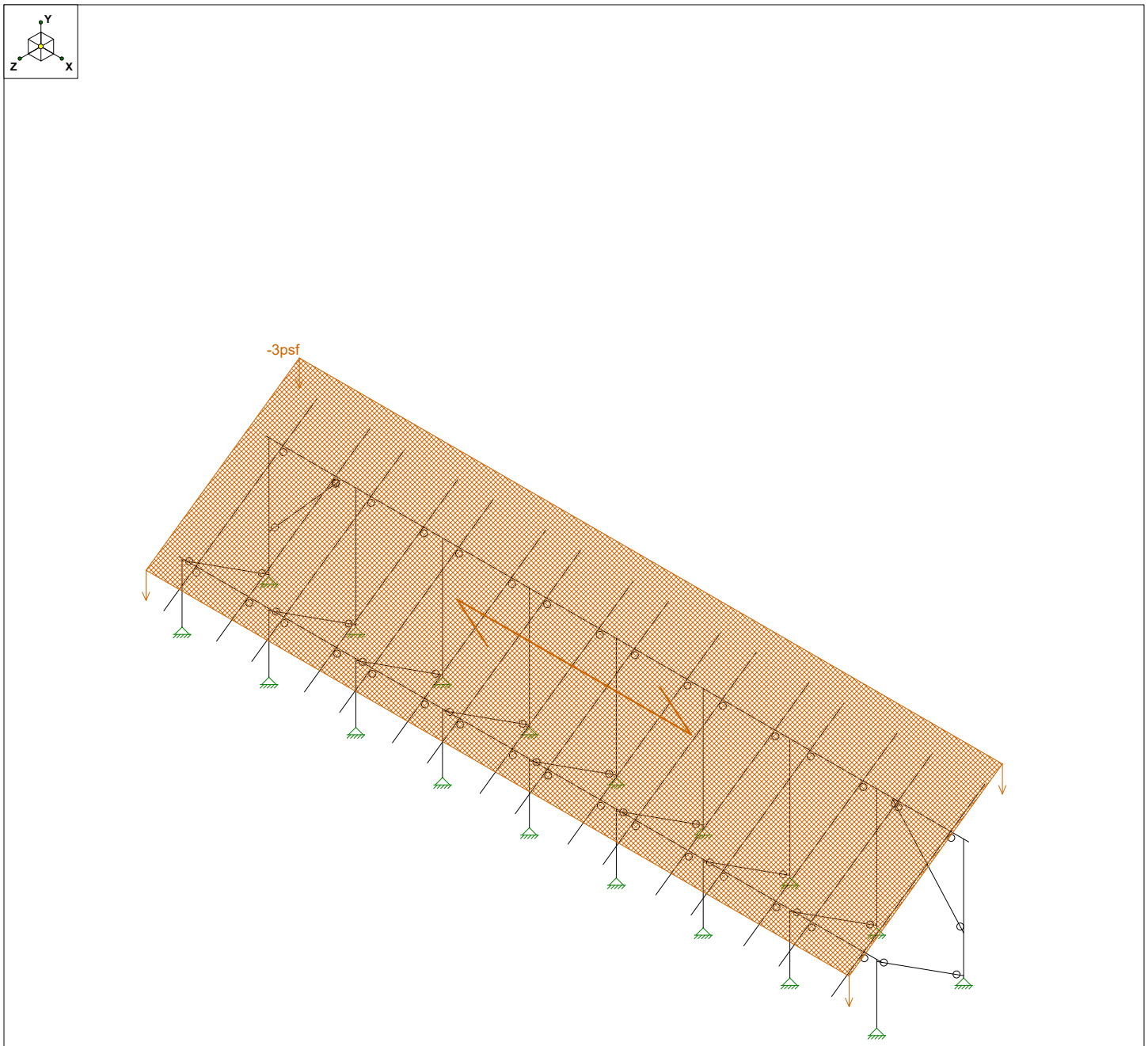

Loads: BLC 2, Solar Panel Weight

Vector Structural Engineeri...		SK - 5
STB	Ground Mount	Apr 6, 2021 at 9:54 AM
U2716-0218-201		Sunmodo Sunturf A8 v3 85x45.r3d

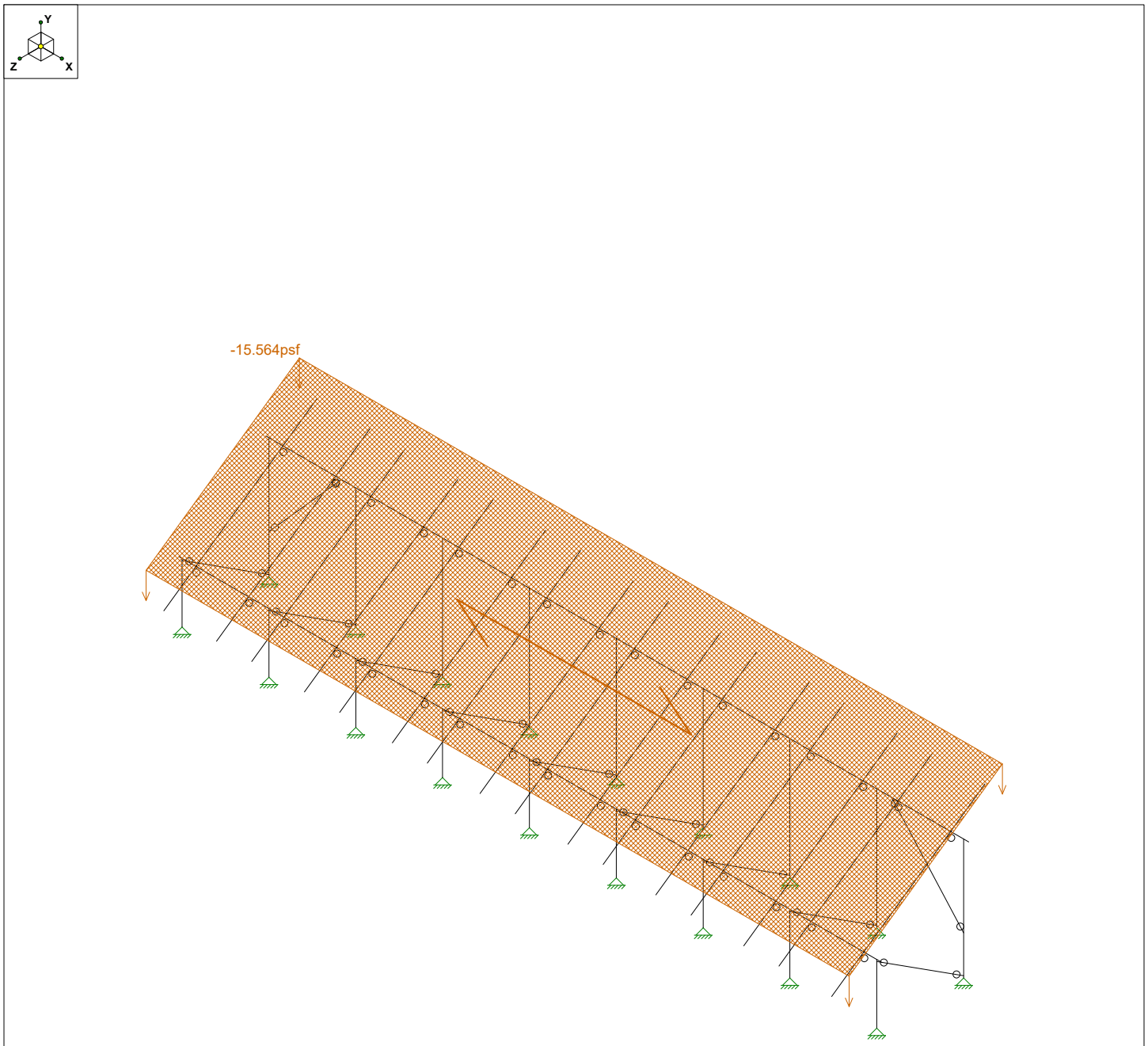

Loads: BLC 3, Roof Live/Snow

Vector Structural Engineeri...		SK - 6
STB	Ground Mount	Apr 6, 2021 at 9:54 AM
U2716-0218-201		Sunmodo Sunturf A8 v3 85x45.r3d

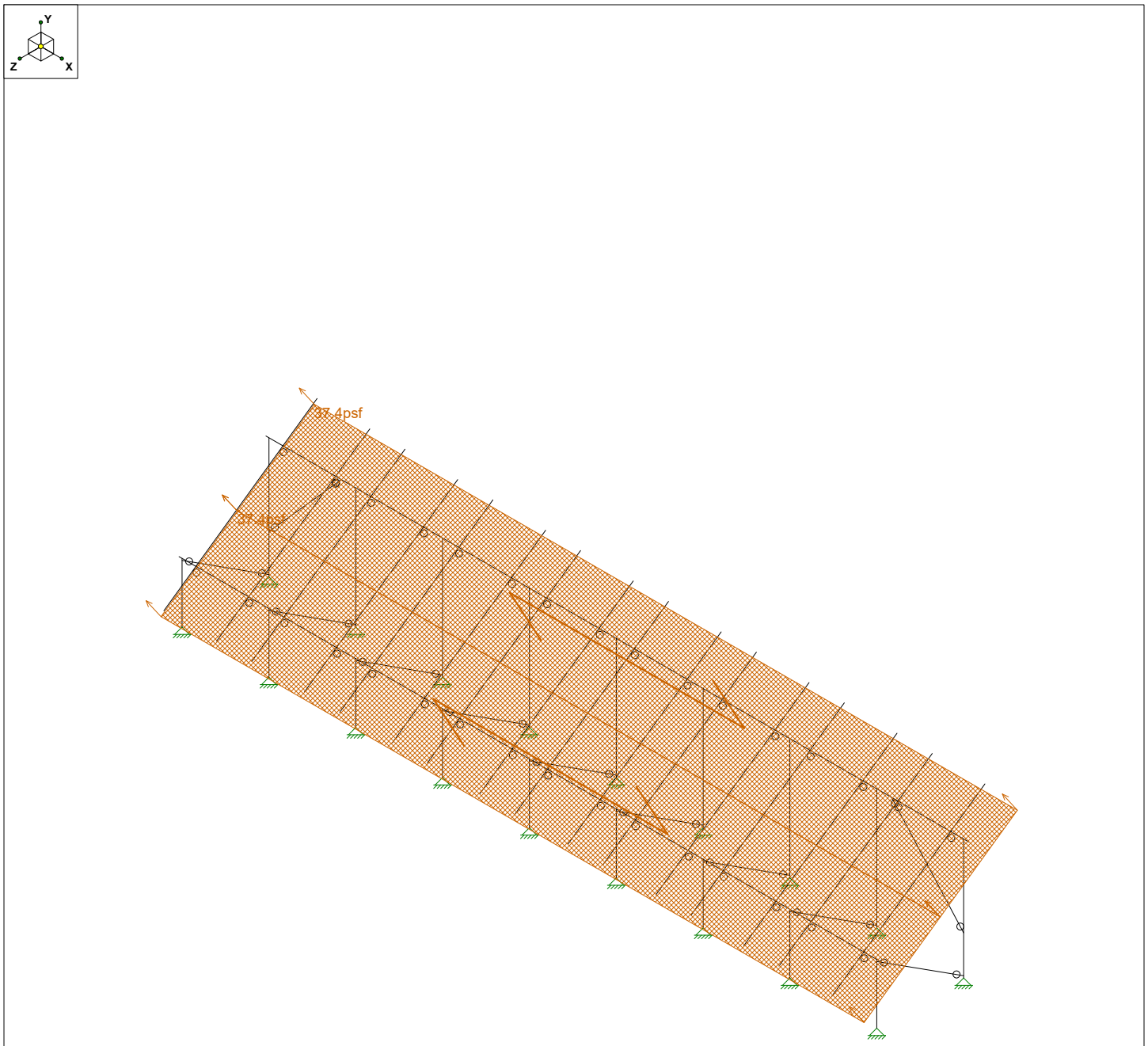

Loads: BLC 4, Wind 1

Vector Structural Engineeri...		SK - 7
STB	Ground Mount	Apr 6, 2021 at 9:54 AM
U2716-0218-201		Sunmodo Sunturf A8 v3 85x45.r3d

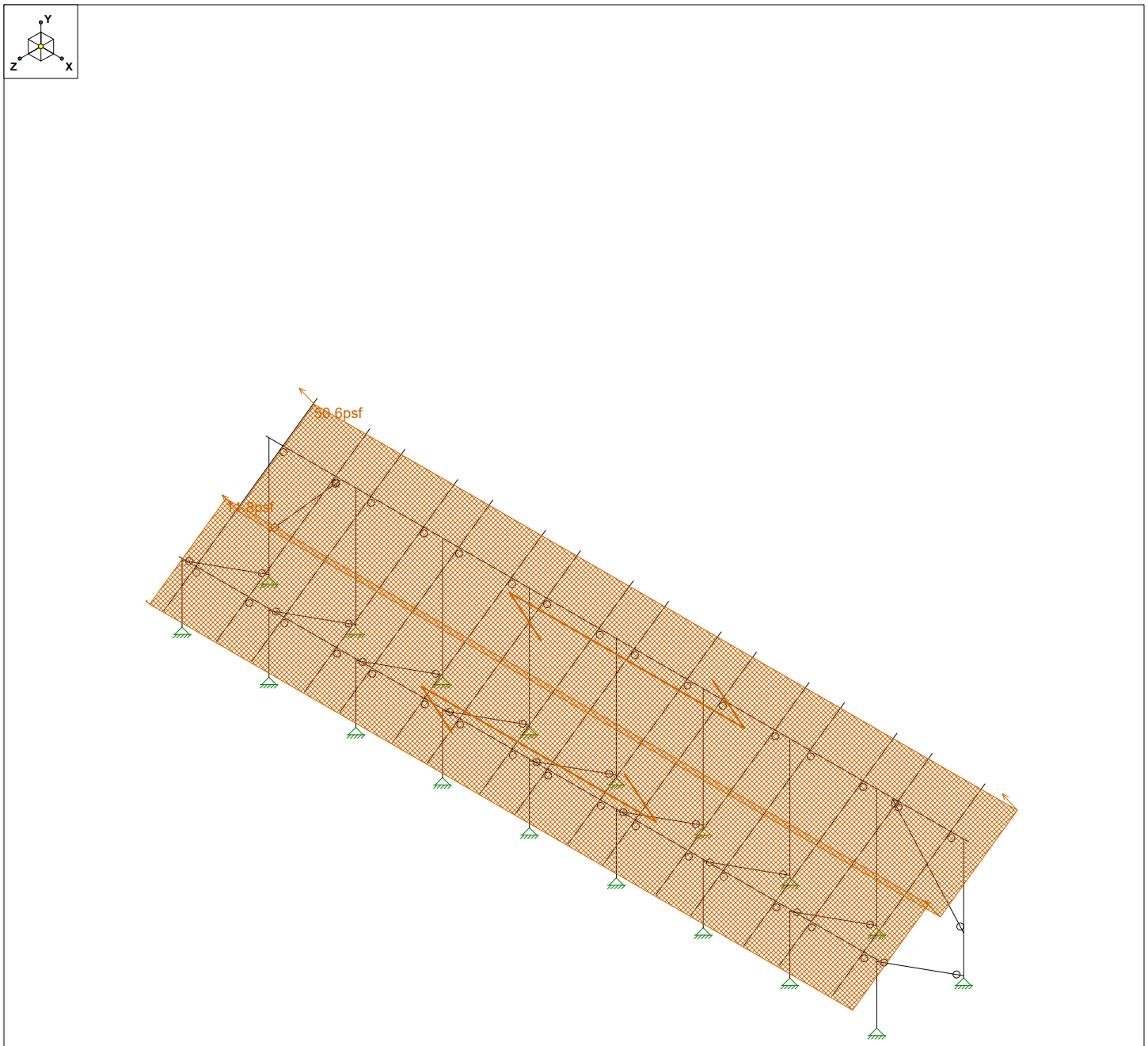

Loads: BLC 5, Wind 2

Vector Structural Engineeri...		SK - 8
STB	Ground Mount	Apr 6, 2021 at 9:54 AM
U2716-0218-201		Sunmodo Sunturf A8 v3 85x45.r3d

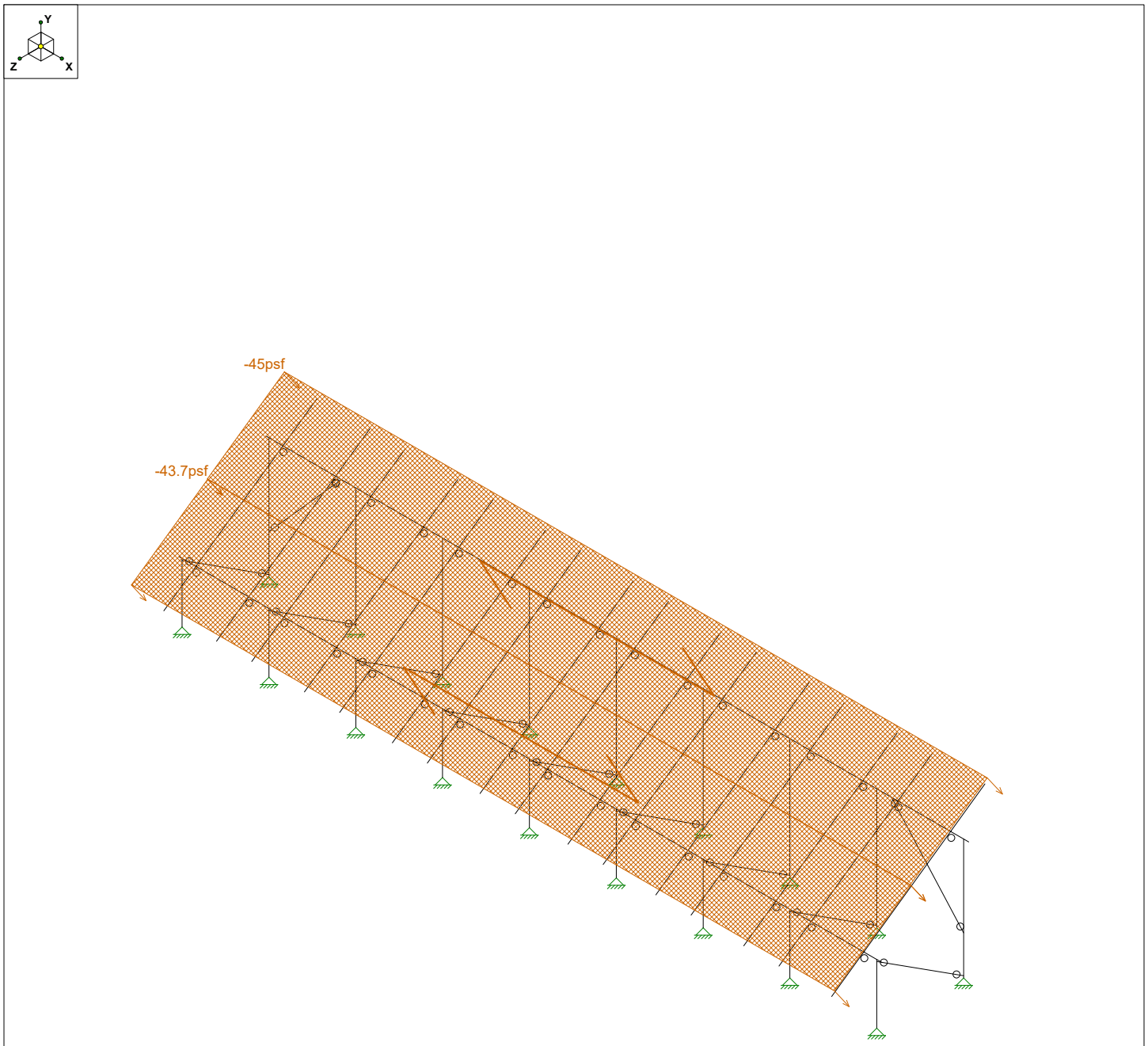

Loads: BLC 6, Wind 3

Vector Structural Engineeri...		SK - 9
STB	Ground Mount	Apr 6, 2021 at 9:54 AM
U2716-0218-201		Sunmodo Sunturf A8 v3 85x45.r3d

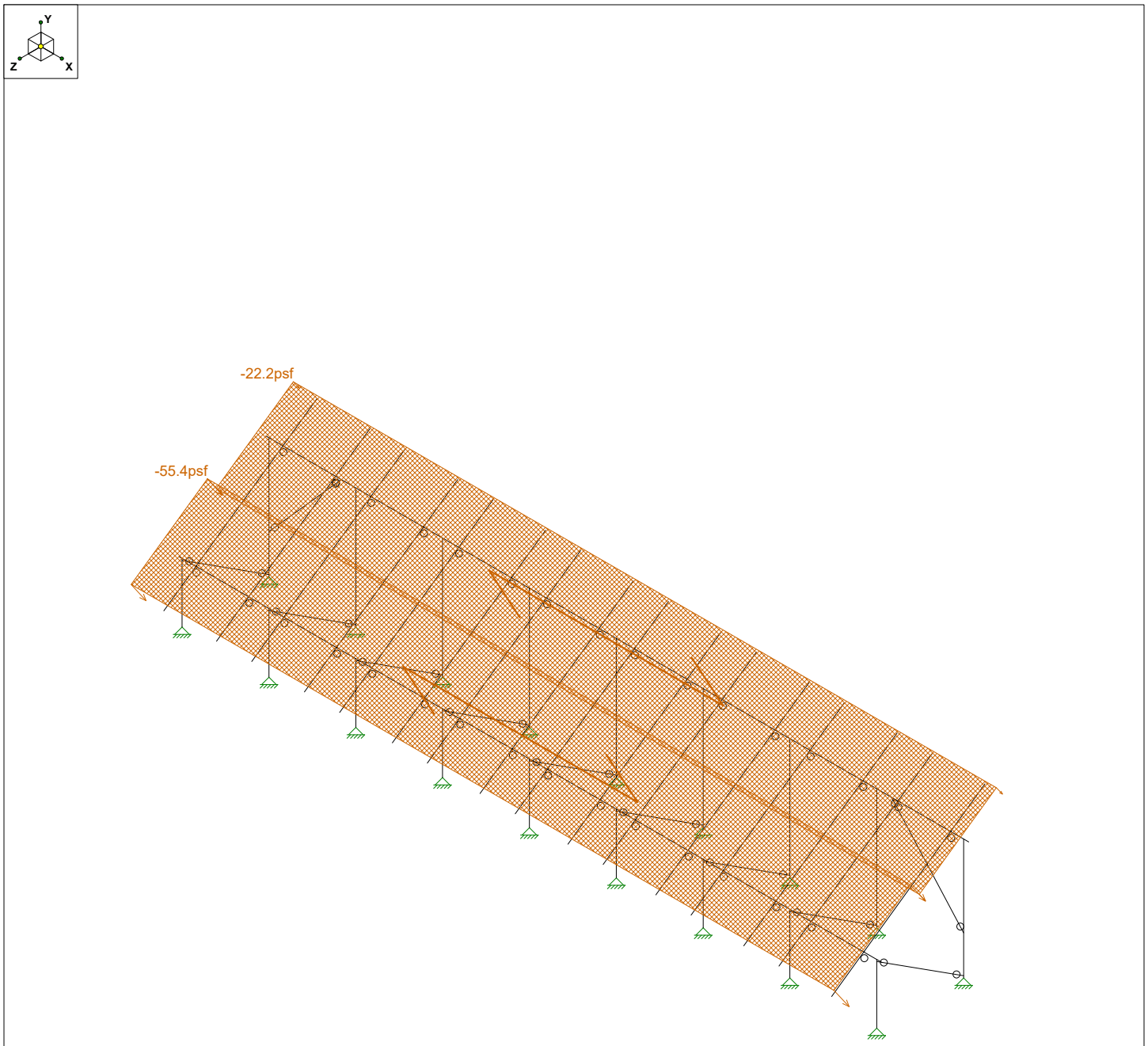

Loads: BLC 7, Wind 4

Vector Structural Engineeri...		SK - 10
STB	Ground Mount	Apr 6, 2021 at 9:54 AM
U2716-0218-201		Sunmodo Sunturf A8 v3 85x45.r3d

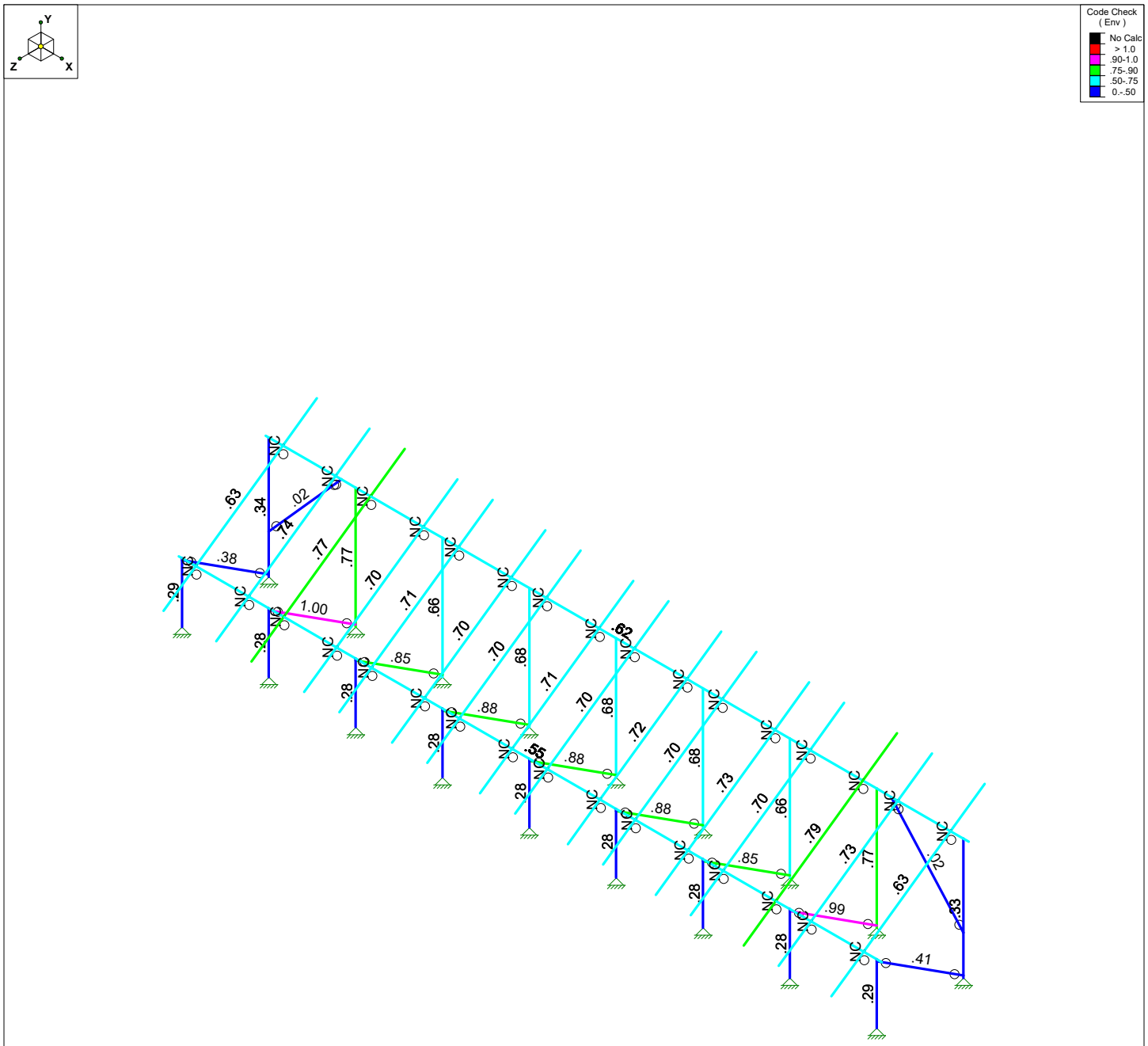

Member Code Checks Displayed (Enveloped)
Envelope Only Solution

Vector Structural Engineeri...		SK - 1
STB	Ground Mount	Apr 6, 2021 at 9:53 AM
U2716-0218-201		Sunmodo Sunturf A8 v3 85x45.r3d

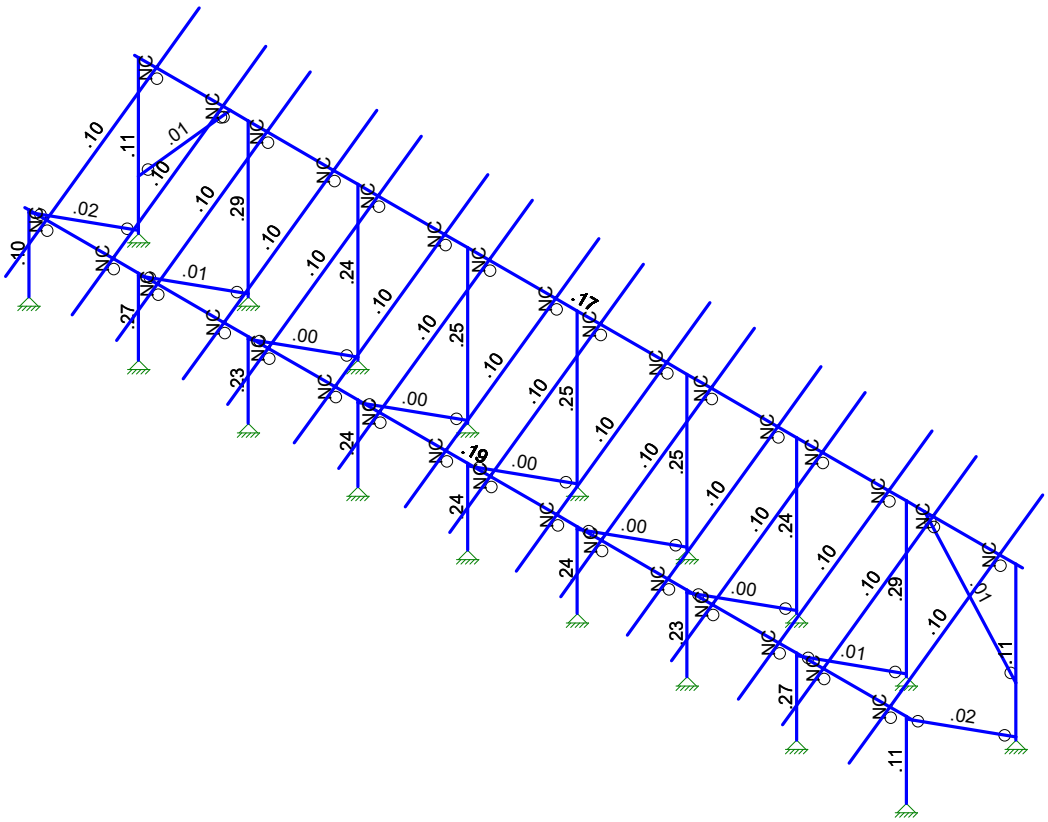

Member Shear Checks Displayed (Enveloped)
Envelope Only Solution

Vector Structural Engineeri...		SK - 2
STB	Ground Mount	Apr 6, 2021 at 9:53 AM
U2716-0218-201		Sunmodo Sunturf A8 v3 85x45.r3d

(Global) Model Settings

Display Sections for Member Calcs	5
Max Internal Sections for Member Calcs	97
Include Shear Deformation?	Yes
Increase Nailing Capacity for Wind?	Yes
Include Warping?	Yes
Trans Load Btwn Intersecting Wood Wall?	Yes
Area Load Mesh (in^2)	144
Merge Tolerance (in)	.12
P-Delta Analysis Tolerance	0.50%
Include P-Delta for Walls?	Yes
Automatically Iterate Stiffness for Walls?	Yes
Max Iterations for Wall Stiffness	3
Gravity Acceleration (in/sec^2)	386.4
Wall Mesh Size (in)	24
Eigensolution Convergence Tol. (1.E-)	4
Vertical Axis	Y
Global Member Orientation Plane	XZ
Static Solver	Sparse Accelerated
Dynamic Solver	Accelerated Solver

Hot Rolled Steel Code	AISC 14th(360-10): ASD
Adjust Stiffness?	Yes(Iterative)
RISAConnection Code	AISC 14th(360-10): ASD
Cold Formed Steel Code	AISI S100-12: ASD
Wood Code	AWC NDS-15: ASD
Wood Temperature	< 100F
Concrete Code	ACI 318-14
Masonry Code	ACI 530-13: ASD
Aluminum Code	AA ADM1-15: ASD - Building
Stainless Steel Code	AISC 14th(360-10): ASD
Adjust Stiffness?	Yes(Iterative)

Number of Shear Regions	4
Region Spacing Increment (in)	4
Biaxial Column Method	Exact Integration
Parme Beta Factor (PCA)	.65
Concrete Stress Block	Rectangular
Use Cracked Sections?	Yes
Use Cracked Sections Slab?	No
Bad Framing Warnings?	No
Unused Force Warnings?	Yes
Min 1 Bar Diam. Spacing?	No
Concrete Rebar Set	REBAR_SET_ASTMA615
Min % Steel for Column	1
Max % Steel for Column	8

(Global) Model Settings, Continued

Seismic Code	ASCE 7-10
Seismic Base Elevation (in)	15600
Add Base Weight?	Yes
Ct X	.02
Ct Z	.02
T X (sec)	Not Entered
T Z (sec)	Not Entered
R X	3
R Z	3
Ct Exp. X	.75
Ct Exp. Z	.75
SD1	1
SDS	1
S1	1
TL (sec)	5
Risk Cat	I or II
Drift Cat	Other
Om Z	1
Om X	1
Cd Z	4
Cd X	4
Rho Z	1
Rho X	1

Hot Rolled Steel Properties

	Label	E [ksi]	G [ksi]	Nu	Therm (/1E5 F)	Density[k/ft^3]	Yield[psi]	Ry	Fu[psi]	Rt
1	A992	29000	11154	.3	.65	.49	50000	1.1	65000	1.1
2	A36 Gr.36	29000	11154	.3	.65	.49	36000	1.5	58000	1.2
3	A572 Gr.50	29000	11154	.3	.65	.49	50000	1.1	65000	1.1
4	A500 Gr.B R...	29000	11154	.3	.65	.527	42000	1.4	58000	1.3
5	A500 Gr.B Re...	29000	11154	.3	.65	.527	46000	1.4	58000	1.3
6	A53 Gr.B	29000	11154	.3	.65	.49	35000	1.6	60000	1.2
7	A1085	29000	11154	.3	.65	.49	50000	1.4	65000	1.3

Aluminum Properties

	Label	E [ksi]	G [ksi]	Nu	Therm (...	Density[...	Table B.4	kt	Ftu[psi]	Fty[psi]	Fcy[psi]	Fsu[psi]	Ct
1	3003-H14	10100	3787.5	.33	1.3	.173	Table B.4-1	1	19000	16000	13000	12000	141
2	6061-T6	10100	3787.5	.33	1.3	.173	Table B.4-2	1	38000	35000	35000	24000	141
3	6063-T5	10100	3787.5	.33	1.3	.173	Table B.4-2	1	22000	16000	16000	13000	141
4	6063-T6	10100	3787.5	.33	1.3	.173	Table B.4-2	1	30000	25000	25000	19000	141
5	5052-H34	10200	3787.5	.33	1.3	.173	Table B.4-1	1	34000	26000	24000	20000	141
6	6061-T6 W	10100	3787.5	.33	1.3	.173	Table B.4-1	1	24000	15000	15000	15000	141
7	6005-T5	10100	3787.5	.33	1.3	.173	Table B.4-1	1	38000	35000	35000	24000	141

Hot Rolled Steel Section Sets

	Label	Shape	Type	Design List	Material	Design R...	A [in2]	Iyy [in4]	Izz [in4]	J [in4]
1	Post	Pipe 2.0 A21165	Column	Pipe	A572 Gr.50	Typical	.776	.499	.499	.998
2	Cross Beam	Pipe 2.5 A21168	Beam	Wide Flange	A572 Gr.50	Typical	.947	.907	.907	1.814
3	Diagonal Brace	1.5x1.5x0.083	HBrace	SquareTube	A572 Gr.50	Typical	.47	.158	.158	.236

Aluminum Section Sets

	Label	Shape	Type	Design List	Material	Design R...	A [in2]	Iyy [in4]	Izz [in4]	J [in4]
1	AL Posts	2.375ODX0.188	Column	Pipe	6005-T5	Typical	1.29	.778	.778	1.54
2	AL Brace	RT1.5x2x0.15625	VBrace	Rectangular Tubes	6005-T5	Typical	.996	.327	.524	.602
3	AL Rails	HR300	Beam	Rectangular Tubes	6005-T5	Typical	.74	.253	.727	.578
4	AL Cross Beam	Cross Rail	Beam	Rectangular Tubes	6005-T5	Typical	1.909	1.97	4.366	4.017

Member Area Loads (BLC 2 : Solar Panel Weight)

	Joint A	Joint B	Joint C	Joint D	Direction	Distribution	Magnitude[psf]
1	N197	N200	N199	N196	Y	A-B	-3

Member Area Loads (BLC 3 : Roof Live/Snow)

	Joint A	Joint B	Joint C	Joint D	Direction	Distribution	Magnitude[psf]
1	N197	N200	N199	N196	PY	A-B	-19

Member Area Loads (BLC 4 : Wind 1)

	Joint A	Joint B	Joint C	Joint D	Direction	Distribution	Magnitude[psf]
1	N197	N119B	N120B	N200	Perp	B-C	37.4
2	N119B	N196	N199	N120B	Perp	B-C	37.4

Member Area Loads (BLC 5 : Wind 2)

	Joint A	Joint B	Joint C	Joint D	Direction	Distribution	Magnitude[psf]
1	N197	N119B	N120B	N200	Perp	B-C	50.6
2	N119B	N196	N199	N120B	Perp	B-C	11.8

Member Area Loads (BLC 6 : Wind 3)

	Joint A	Joint B	Joint C	Joint D	Direction	Distribution	Magnitude[psf]
1	N197	N119B	N120B	N200	Perp	B-C	-45
2	N119B	N196	N199	N120B	Perp	B-C	-43.7

Member Area Loads (BLC 7 : Wind 4)

	Joint A	Joint B	Joint C	Joint D	Direction	Distribution	Magnitude[psf]
1	N197	N119B	N120B	N200	Perp	B-C	-22.2
2	N119B	N196	N199	N120B	Perp	B-C	-55.4

Basic Load Cases

	BLC Description	Category	X Gravity	Y Gravity	Z Gravity	Joint	Point	Distributed	Area(M...	Surface...
1	Self Weight	DL		-1.05						
2	Solar Panel Weight	DL							1	
3	Roof Live/Snow	RLL							1	
4	Wind 1	OL1							2	
5	Wind 2	OL2							2	
6	Wind 3	OL3							2	
7	Wind 4	OL4							2	
8	BLC 2 Transient Area ...	None						40		
9	BLC 3 Transient Area ...	None						40		
10	BLC 4 Transient Area ...	None						192		
11	BLC 5 Transient Area ...	None						192		
12	BLC 6 Transient Area ...	None						192		
13	BLC 7 Transient Area ...	None						192		

Load Combinations

	Description	S...	PD...	SRSS	BLC	Fa...	BLC	Fa...	BLC	Fa...	B...	Fa...	B...	Fa...	B...	Fa...	B...	Fa...	B...	Fa...	B...	Fa...	B...	Fa...
1	ASD Loads		Y																					
2	1.0 D	Yes	Y		DL	1																		
3	1.0 D + 1.0 S	Yes	Y		DL	1	RLL	1																
4	1.0 D + 0.6 W1	Yes	Y		DL	1	RLL		OL1	.6														
5	1.0 D + 0.6 W2	Yes	Y		DL	1	RLL		OL2	.6														
6	1.0 D + 0.6 W3	Yes	Y		DL	1	RLL		OL3	.6														
7	1.0 D + 0.6 W4	Yes	Y		DL	1	RLL		OL4	.6														
8	1.0 D + 0.45 W1 + 0....	Yes	Y		DL	1	RLL	.75	OL1	.45														
9	1.0 D + 0.45 W2 + 0....	Yes	Y		DL	1	RLL	.75	OL2	.45														
10	1.0 D + 0.45 W3 + 0....	Yes	Y		DL	1	RLL	.75	OL3	.45														
11	1.0 D + 0.45 W4 + 0....	Yes	Y		DL	1	RLL	.75	OL4	.45														
12	0.6 D + 0.6 W1	Yes	Y		DL	.6	RLL		OL1	.6														
13	0.6 D + 0.6 W2	Yes	Y		DL	.6	RLL		OL2	.6														
14	0.6 D + 0.6 W3	Yes	Y		DL	.6	RLL		OL3	.6														
15	0.6 D + 0.6 W4	Yes	Y		DL	.6	RLL		OL4	.6														
16			Y																					
17	LRFD Loads		Y																					
18	1.4 D		Y		DL	1.4	RLL																	
19	1.2 D + 1.6 S + 0.5 W1		Y		DL	1.2	RLL	1.6	OL1	.5														
20	1.2 D + 1.6 S + 0.5 W2		Y		DL	1.2	RLL	1.6	OL2	.5														
21	1.2 D + 1.6 S + 0.5 W3		Y		DL	1.2	RLL	1.6	OL3	.5														
22	1.2 D + 1.6 S + 0.5 W4		Y		DL	1.2	RLL	1.6	OL4	.5														
23	1.2 D + 1.0 W1		Y		DL	1.2	RLL		OL1	1														
24	1.2 D + 1.0 W2		Y		DL	1.2	RLL		OL2	1														
25	1.2 D + 1.0 W3		Y		DL	1.2	RLL		OL3	1														
26	1.2 D + 1.0 W4		Y		DL	1.2	RLL		OL4	1														
27	0.9 D + 1.0 W1		Y		DL	.9	RLL		OL1	1														
28	0.9 D + 1.0 W2		Y		DL	.9	RLL		OL2	1														
29	0.9 D + 1.0 W3		Y		DL	.9	RLL		OL3	1														
30	0.9 D + 1.0 W4		Y		DL	.9	RLL		OL4	1														

Envelope Joint Reactions

	Joint		X [lb]	LC	Y [lb]	LC	Z [lb]	LC	MX [lb-ft]	LC	MY [lb...	LC	MZ [lb-ft]	LC
1	N2	max	72.221	11	724.089	9	41.966	4	0	15	0	15	0	15
2		min	-19.305	12	-166.695	14	-50.066	6	0	2	0	2	0	2
3	N1	max	5.673	9	1342.839	6	724.928	14	0	15	0	15	0	15
4		min	-6.476	6	-1044.005	13	-612.4...	4	0	2	0	2	0	2
5	N123	max	5.203	14	1425.843	6	770.02	14	0	15	0	15	0	15
6		min	-5.745	9	-1113.737	13	-650.5...	4	0	2	0	2	0	2
7	N124	max	20.962	12	766.306	9	43.293	4	0	15	0	15	0	15
8		min	-72.688	11	-182.099	14	-51.587	6	0	2	0	2	0	2
9	N123A	max	4.316	13	3561.348	6	1919.1...	6	0	15	0	15	0	15
10		min	-6.414	10	-2880.704	13	-1616....	12	0	2	0	2	0	2
11	N124A	max	12.033	12	1792.213	9	65.379	4	0	15	0	15	0	15
12		min	-21.599	11	-556.12	14	-76.669	6	0	2	0	2	0	2
13	N129	max	1.608	10	3032.79	6	1640.7...	14	0	15	0	15	0	15
14		min	-1.113	13	-2470.797	13	-1384....	4	0	2	0	2	0	2
15	N130	max	2.985	11	1581.955	9	67.275	4	0	15	0	15	0	15
16		min	-.968	12	-427.406	14	-79.5	6	0	2	0	2	0	2
17	N135	max	.232	13	3135.431	6	1702.4...	6	0	15	0	15	0	15
18		min	-.179	10	-2550.903	13	-1435....	4	0	2	0	2	0	2
19	N136	max	.82	12	1621.867	9	68.517	4	0	15	0	15	0	15
20		min	-1.315	10	-459.607	14	-80.853	6	0	2	0	2	0	2
21	N141	max	.215	5	3111.357	6	1688.85	6	0	15	0	15	0	15

Envelope Joint Reactions (Continued)

	Joint		X [lb]	LC	Y [lb]	LC	Z [lb]	LC	MX [lb-ft]	LC	MY [lb...	LC	MZ [lb-ft]	LC
22		min	-.046	14	-2532.48	13	-1424....	4	0	2	0	2	0	2
23	N142	max	.501	14	1613.996	9	68.603	4	0	15	0	15	0	15
24		min	-.661	5	-453.471	14	-80.981	6	0	2	0	2	0	2
25	N147B	max	.325	8	3134.852	6	1702.0...	6	0	15	0	15	0	15
26		min	.003	14	-2550.382	13	-1435....	4	0	2	0	2	0	2
27	N148A	max	2.272	6	1621.553	9	68.533	4	0	15	0	15	0	15
28		min	-1.847	12	-459.154	14	-80.87	6	0	2	0	2	0	2
29	N153A	max	1.483	13	3036.215	6	1643.7...	14	0	15	0	15	0	15
30		min	-1.567	10	-2474.327	13	-1387....	4	0	2	0	2	0	2
31	N154A	max	-.002	12	1584.169	9	67.371	4	0	15	0	15	0	15
32		min	-2.616	11	-430.35	14	-79.595	6	0	2	0	2	0	2
33	N159	max	6.379	10	3548.766	6	1912.0...	6	0	15	0	15	0	15
34		min	-3.788	13	-2870.194	13	-1610....	12	0	2	0	2	0	2
35	N160	max	22.294	11	1786.774	9	65.616	4	0	15	0	15	0	15
36		min	-13.349	12	-549.801	14	-76.965	6	0	2	0	2	0	2
37	Totals:	max	.002	7	27661.729	10	13046....	14						
38		min	0	8	-13485.865	12	-1100...	4						

Envelope AISC 14th(360-10): ASD Steel Code Checks

	Member	Shape	Code Check	Loc[in]	LC	Shear ...	Loc[in]	Dir	LC	Pnc/om [...	Pnt/om [lb]	Mnyy/om...	Mnzz/om...	Cb	Eqn
1	M5	Pipe 2.0 A2...	.288	56.41	11	.100	56.41		14	15932.019	23232.186	1397.505	1397.505	1....	H1-1b
2	M6	Pipe 2.0 A2...	.339	116.63	10	.107	0		6	5516.125	23232.186	1397.505	1397.505	2....	H1-1b
3	M13	Pipe 2.5 A2...	.550	85	11	.185	587....		6	14032.946	28358.413	2081.747	2081.747	1	H1-1b
4	M14	Pipe 2.5 A2...	.616	85	10	.166	85		10	14032.946	28358.413	2081.747	2081.747	1	H1-1b
5	M19	Pipe 2.0 A2...	.018	53.798	5	.015	0		6	6754.18	23232.186	1397.505	1397.505	1....	H1-1b
6	M92A	1.5x1.5x0.083	.384	51.985	6	.023	99.811	y	9	2383.445	14085.15	624.421	624.421	1....	H1-1a
7	M59	Pipe 2.0 A2...	.017	53.713	5	.012	0		7	6775.487	23232.186	1397.505	1397.505	1....	H1-1b
8	M59A	Pipe 2.0 A2...	.292	56.41	11	.106	56.41		6	15932.019	23232.186	1397.505	1397.505	1....	H1-1b
9	M60	Pipe 2.0 A2...	.334	116.63	10	.113	0		6	5516.125	23232.186	1397.505	1397.505	2....	H1-1b
10	M61	1.5x1.5x0.083	.407	51.985	6	.021	0	y	9	2383.445	14085.15	624.421	624.421	1....	H1-1a
11	M59B	Pipe 2.0 A2...	.276	55.81	14	.274	56.41		6	15932.019	23232.186	1397.505	1397.505	1....	H1-1b
12	M60A	Pipe 2.0 A2...	.775	1.215	6	.287	0		6	5516.125	23232.186	1397.505	1397.505	1....	H1-1a
13	M61A	1.5x1.5x0.083	.996	51.985	6	.013	0	y	10	2383.445	14085.15	624.421	624.421	1....	H1-1a
14	M62	Pipe 2.0 A2...	.275	55.81	14	.230	56.41		6	15932.019	23232.186	1397.505	1397.505	1....	H1-1b
15	M63	Pipe 2.0 A2...	.659	1.215	6	.244	0		6	5516.125	23232.186	1397.505	1397.505	1....	H1-1a
16	M64	1.5x1.5x0.083	.852	51.985	6	.003	0	y	10	2383.445	14085.15	624.421	624.421	1....	H1-1a
17	M65	Pipe 2.0 A2...	.281	55.81	14	.239	56.41		6	15932.019	23232.186	1397.505	1397.505	1....	H1-1b
18	M66	Pipe 2.0 A2...	.682	1.215	6	.254	0		6	5516.125	23232.186	1397.505	1397.505	1....	H1-1a
19	M67	1.5x1.5x0.083	.884	51.985	6	.002	0	y	10	2383.445	14085.15	624.421	624.421	1....	H1-1a
20	M68A	Pipe 2.0 A2...	.281	55.81	14	.237	56.41		6	15932.019	23232.186	1397.505	1397.505	1....	H1-1b
21	M69A	Pipe 2.0 A2...	.677	1.215	6	.252	0		6	5516.125	23232.186	1397.505	1397.505	1....	H1-1a
22	M70A	1.5x1.5x0.083	.877	51.985	6	.002	99.811	y	5	2383.445	14085.15	624.421	624.421	1....	H1-1a
23	M71A	Pipe 2.0 A2...	.281	55.81	14	.239	56.41		6	15932.019	23232.186	1397.505	1397.505	1....	H1-1b
24	M72A	Pipe 2.0 A2...	.682	1.215	6	.254	0		6	5516.125	23232.186	1397.505	1397.505	1....	H1-1a
25	M73A	1.5x1.5x0.083	.883	51.985	6	.004	99.811	y	6	2383.445	14085.15	624.421	624.421	1....	H1-1a
26	M74A	Pipe 2.0 A2...	.276	55.81	14	.231	56.41		6	15932.019	23232.186	1397.505	1397.505	1....	H1-1b
27	M75A	Pipe 2.0 A2...	.660	1.215	6	.245	0		6	5516.125	23232.186	1397.505	1397.505	1....	H1-1a
28	M76A	1.5x1.5x0.083	.854	51.985	6	.003	99.811	y	9	2383.445	14085.15	624.421	624.421	1....	H1-1a
29	M77	Pipe 2.0 A2...	.278	55.81	14	.274	56.41		6	15932.019	23232.186	1397.505	1397.505	1....	H1-1b
30	M78	Pipe 2.0 A2...	.772	1.215	6	.286	0		6	5516.125	23232.186	1397.505	1397.505	1....	H1-1a
31	M79	1.5x1.5x0.083	.992	51.985	6	.015	0	y	10	2383.445	14085.15	624.421	624.421	1....	H1-1a

Envelope AA ADM1-15: ASD - Building Aluminum Code Checks

	Member	Shape	Code C...	Loc[in]	LC	Shear ...	Loc[in]	Dir	LC	Pnc/O...	Pnt/Om...	Mny/O...	Mnz/O...	Vny/O...	Vnz/O...	Cb	Eqn
1	M16	HR300	.634	139.5...	13	.099	39.594	y	7	3548.418	14429....	560.361	934.132	5656.689	2605.145	1....	H.1-1
2	M34	HR300	.745	39.594	7	.102	39.594	y	11	3548.418	14429....	560.361	934.132	5656.689	2605.145	2....	H.1-1
3	M37	HR300	.766	139.5...	13	.097	39.594	y	11	3548.418	14429....	560.361	934.132	5656.689	2605.145	1....	H.1-1
4	M40	HR300	.698	39.594	11	.096	39.594	y	11	3548.418	14429....	560.361	934.132	5656.689	2605.145	1....	H.1-1
5	M43	HR300	.705	139.5...	13	.097	39.594	y	11	3548.418	14429....	560.361	934.132	5656.689	2605.145	1....	H.1-1
6	M46	HR300	.700	39.594	11	.097	39.594	y	11	3548.418	14429....	560.361	934.132	5656.689	2605.145	1....	H.1-1
7	M49	HR300	.700	139.5...	13	.097	39.594	y	11	3548.418	14429....	560.361	934.132	5656.689	2605.145	1....	H.1-1
8	M52	HR300	.709	139.5...	13	.097	39.594	y	11	3548.418	14429....	560.361	934.132	5656.689	2605.145	1....	H.1-1
9	M55	HR300	.700	39.594	11	.097	39.594	y	11	3548.418	14429....	560.361	934.132	5656.689	2605.145	1....	H.1-1
10	M58	HR300	.721	139.5...	13	.097	39.594	y	11	3548.418	14429....	560.361	934.132	5656.689	2605.145	1....	H.1-1
11	M61B	HR300	.701	39.594	11	.097	39.594	y	11	3548.418	14429....	560.361	934.132	5656.689	2605.145	1....	H.1-1
12	M64A	HR300	.725	139.5...	13	.097	39.594	y	11	3548.418	14429....	560.361	934.132	5656.689	2605.145	1....	H.1-1
13	M67A	HR300	.699	39.594	11	.096	39.594	y	11	3548.418	14429....	560.361	934.132	5656.689	2605.145	1....	H.1-1
14	M70	HR300	.785	139.5...	13	.096	39.594	y	11	3548.418	14429....	560.361	934.132	5656.689	2605.145	1....	H.1-1
15	M73	HR300	.733	39.594	11	.102	39.594	y	11	3548.418	14429....	560.361	934.132	5656.689	2605.145	1....	H.1-1
16	M76	HR300	.632	139.5...	13	.099	39.594	y	7	3548.418	14429....	560.361	934.132	5656.689	2605.145	1....	H.1-1