Project Number: U2716-0281-211

August 31, 2021

Sunmodo
14800 NE 65th Street
Vancouver, WA 98682

REFERENCE: Sunmodo Sunturf Ground Mount A10
Ground Mount PV Array Installation

To Whom It May Concern:

Per request of Sunmodo, we have been asked to prepare the structural design of a ground-mounted PV solar array system with several foundation options as shown in the attached calculations. Vector Structural Engineering requires that we review each site-specific install, and we are not liable for installs at site specific locations we have not reviewed. The following design parameters are used in our analysis:

- Code: 2020 Indiana Residential Code (2018 IRC)
- Minimum Design Loads for Buildings and Other Structures (ASCE 7-16)
- Design wind speed for risk category I structures: 115 mph
- Wind exposure: C
- Ground snow load: 50 psf
- The ground screws and helical piers must be tested to 1.5 times uplift and 2.0 times lateral reactions found in the table below. A minimum of one ground screw or helical pier must be tested.

Load (ASD)	Value (lbs)	Factor of Safety	Test Value (lbs)
UPLIFT	2277	1.5	3415
LATERAL	1588	2	3176

Foundation concrete shall have a minimum compressive strength of 2500 psi at 28 days. Cement for all concrete shall be Type I or II with a minimum of 6% entrained air with a water/cement ratio of 0.50. Maximum aggregate size shall be 3/4". No special inspection of concrete strength is required.

Footings are designed based on an allowable soil bearing pressure of 1500 psf an allowable skin friction of 250 psf, an allowable lateral bearing pressure of 150 pcf, and a coefficient of friction of 0.3. Vector Structural Engineering strongly recommends independent soils testing be performed by a licensed geotechnical engineer to verify the assumed soil parameters.

All ground mounts are to be installed per manufacturer's recommendations. The use of solar panel support span tables provided by the manufacturer is allowed only where the site conditions and solar panel configuration match the description of the span tables. Electrical engineering is beyond our scope. All work performed must be in accordance with accepted industry-wide methods and applicable safety standards. Vector Structural Engineering assumes no responsibility for improper installation of the solar panels.

Very truly yours,

VECTOR STRUCTURAL ENGINEERING, LLC

RUSSELL N. EMERY
REGISTERED
No:11800314
STATE OF
INDIANA
PROFESSIONAL ENGINEER

08/31/2021

Russell Emery, P.E.
License: PE11800314 - Expires: 7/31/2022
Project Engineer

Enclosures

RNE/mih

VECTOR ENGINEERS
651 W GALENA PARK BLVD. #101 (801) 990-1775
DRAPER, UTAH 84020 (801) 990-1776 FAX

JOB NO. U2716-0281-211
PROJECT SUNMODO SUNTURF GROUND MOUNTS A10
SUBJECT ALL OPTIONS

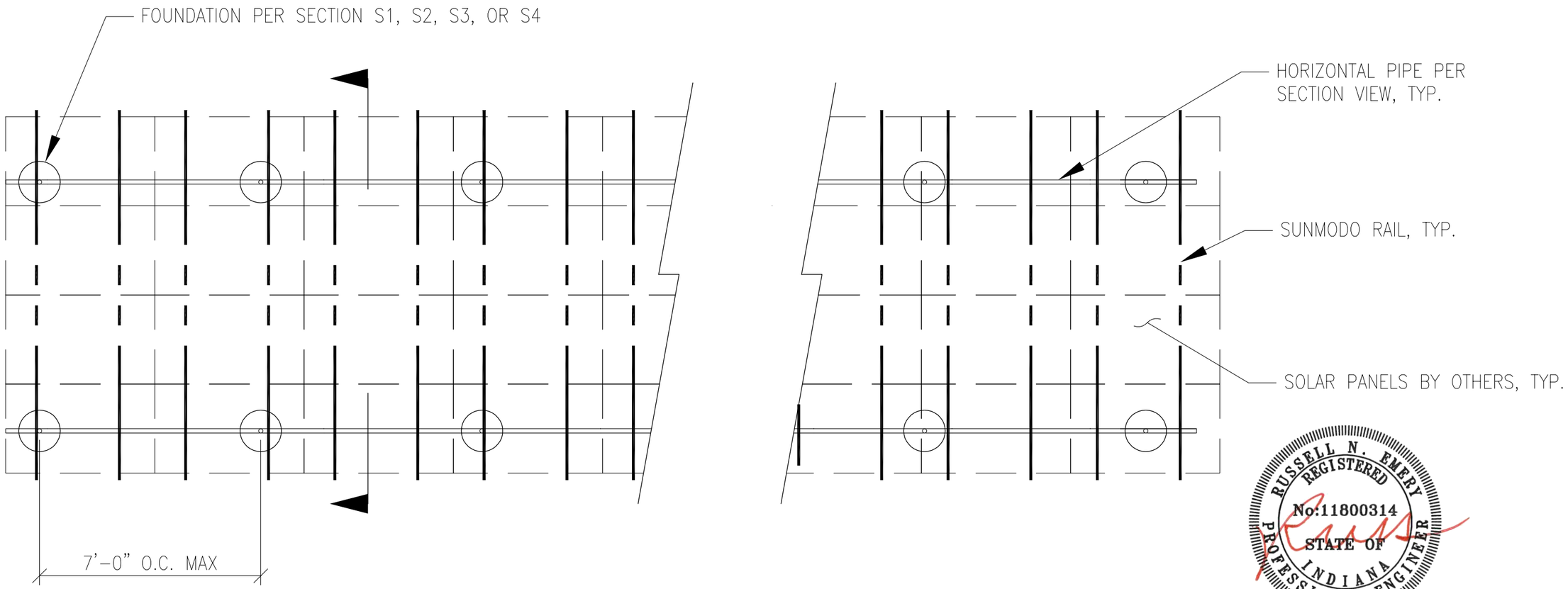

RUSSELL N. EMERY
REGISTERED
No:11800314
STATE OF
INDIANA
PROFESSIONAL ENGINEER

08/31/2021

PV ARRAY PLAN

N.T.S.

P1

Vector Engineers requires that we review each site specific install and is not liable for installs at site specific locations we have not reviewed.

VECTOR ENGINEERS

JOB NO. U2716-0281-211

PROJECT SUNMODO SUNTURF GROUND MOUNTS A10

SUBJECT DRILLED PIER OPTION

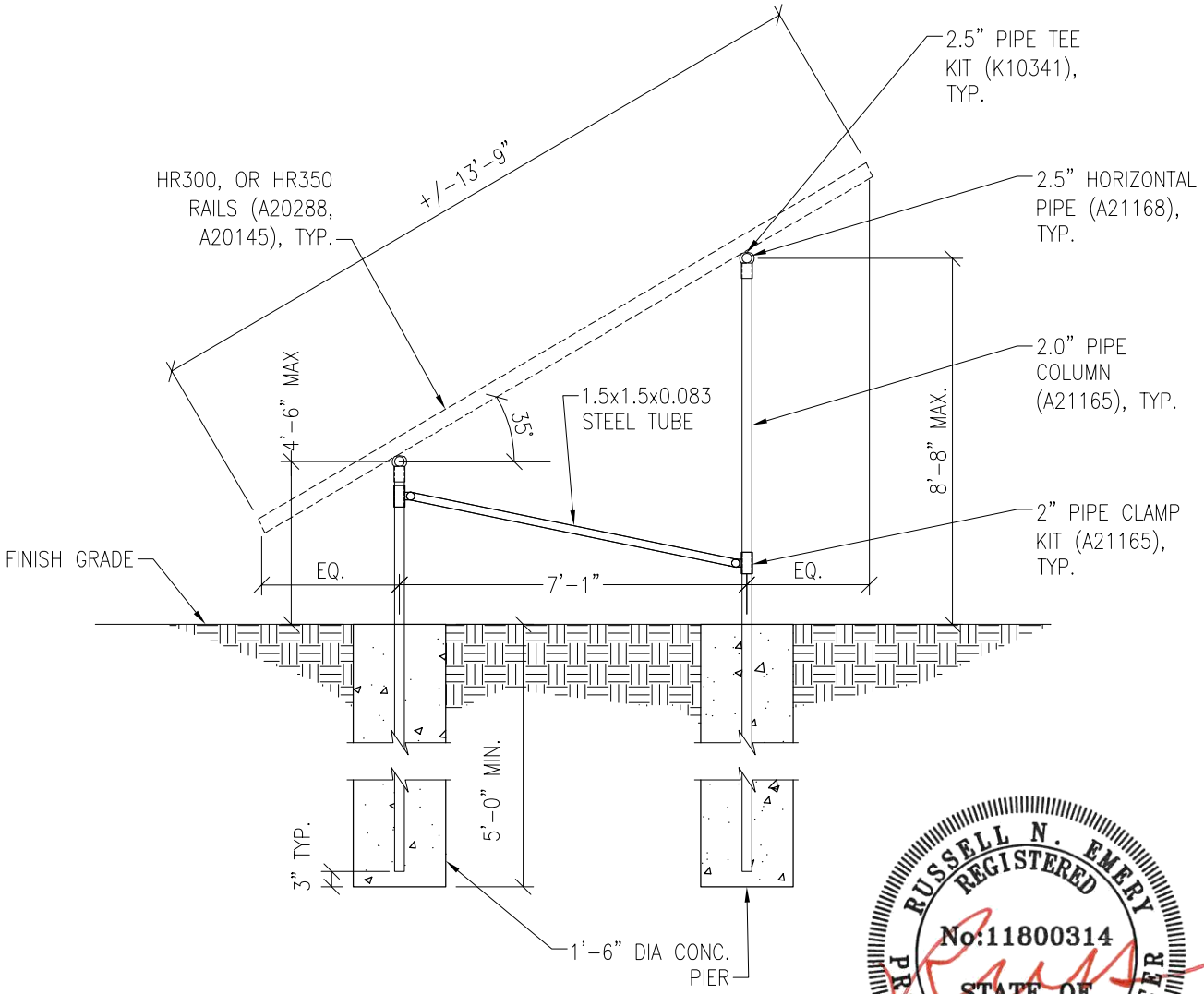

RUSSELL N. EMERY REGISTERED No:11800314 STATE OF INDIANA PROFESSIONAL ENGINEER

08/31/2021

Vector Engineers requires that we review each site specific install and is not liable for installs at site specific locations we have not reviewed.

PV ARRAY SECTION

N.T.S.

S1

651 W Galena Park Blvd. #101
Draper, Utah 84020
(801) 990-1775
(801) 990-1776 FAX
www.vectorse.com

VECTOR ENGINEERS

JOB NO. U2716-0281-211

PROJECT SUNMODO SUNTURF GROUND MOUNTS A10

SUBJECT HELICAL PIER OPTION

NOTES:

1. For ground mount components see Section S1.
2. A minimum of (1) installed helical pier must be tested as follows:
   - 2.1. Safety factor for uplift to be 1.5
   - 2.2. S.F. for lateral loads to be 2.0
   - 2.3. Upward deflection limit = 1/2"
   - 2.4. Lateral deflection limit = 1"
   - 2.5. The load tests must be performed by an approved contractor

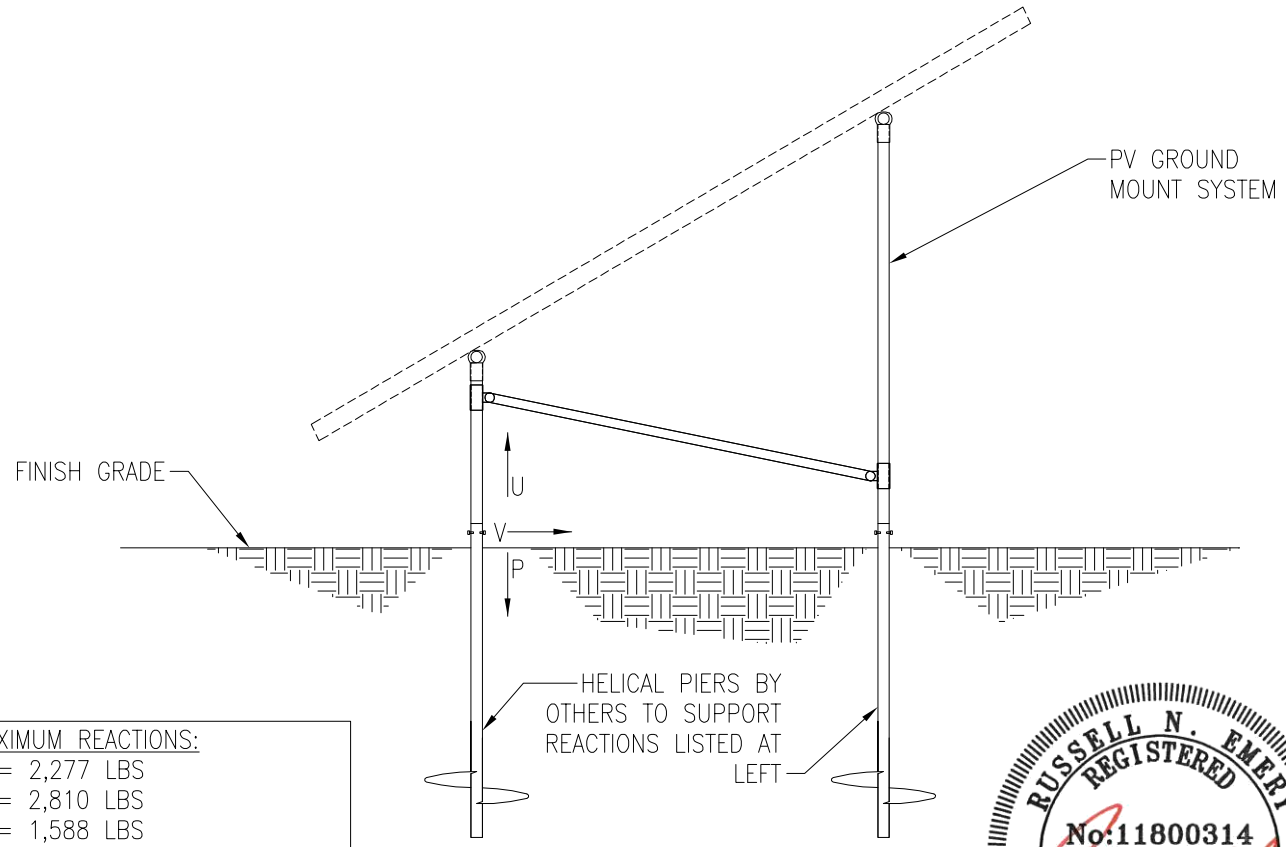

MAXIMUM REACTIONS:
U = 2,277 LBS
P = 2,810 LBS
V = 1,588 LBS

RUSSELL N. EMERY REGISTERED No:11800314 STATE OF INDIANA PROFESSIONAL ENGINEER

08/31/2021

Vector Engineers requires that we review each site specific install and is not liable for installs at site specific locations we have not reviewed.

PV ARRAY SECTION

N.T.S.

S2

651 W GALENA PARK BLVD. #101
DRAPER, UTAH 84020
(801) 990-1775
(801) 990-1776 FAX
WWW.VECTORSE.COM

VECTOR ENGINEERS

JOB NO. U2716-281-211

PROJECT SUNMODO SUNTURF GROUND MOUNTS A10

SUBJECT GROUND SCREW OPTION

NOTES:
1. For ground mount components see Section S1.
2. A minimum of (1) installed ground screw must be tested as follows:
   - 2.1. Safety factor for uplift to be 1.5
   - 2.2. S.F. for lateral loads to be 2.0
   - 2.3. Upward deflection limit = 1/2"
   - 2.4. Lateral deflection limit = 1"
   - 2.5. The load tests must be performed by an approved contractor

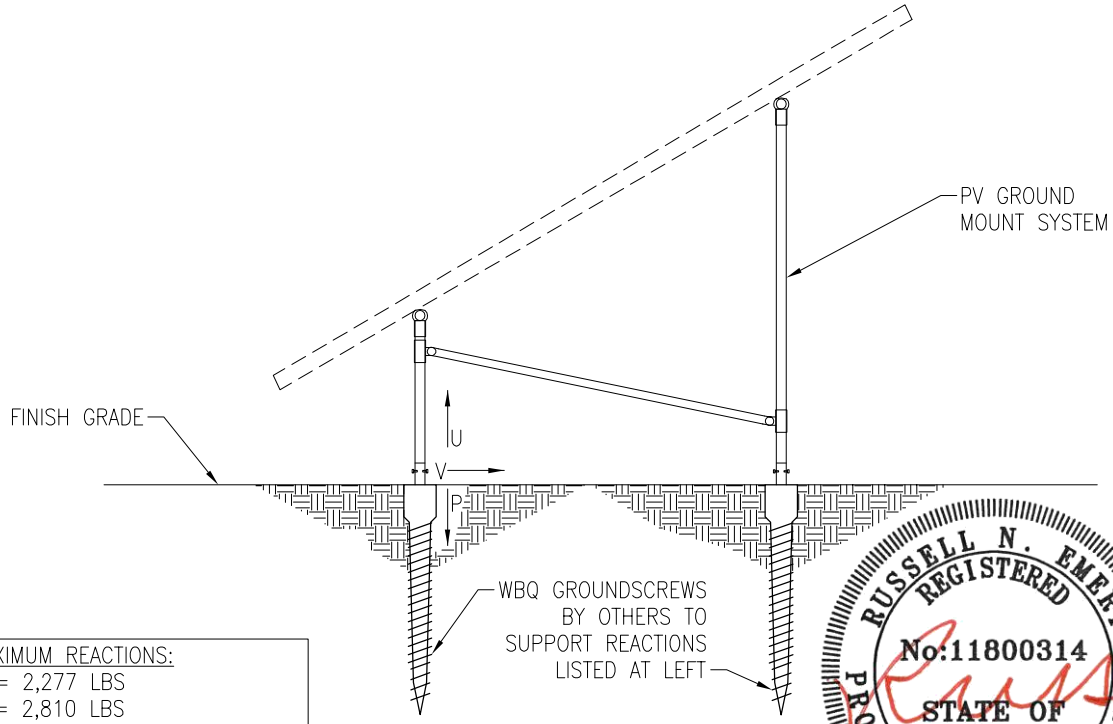

MAXIMUM REACTIONS:
U = 2,277 LBS
P = 2,810 LBS
V = 1,588 LBS

RUSSELL N. EMERY REGISTERED No:11800314 STATE OF INDIANA PROFESSIONAL ENGINEER

08/31/2021

Vector Engineers requires that we review each site specific install and is not liable for installs at site specific locations we have not reviewed.

PV ARRAY SECTION

N.T.S.

S3

651 W Galena Park Blvd. #101
Draper, Utah 84020
(801) 990-1775
(801) 990-1776 FAX
www.vectorse.com

VECTOR ENGINEERS

JOB NO. U2716-0281-211

PROJECT SUNMODO SUNTURF GROUND MOUNTS A10

SUBJECT BALLASTED BLOCK OPTION

NOTES:

1. For ground mount components see Section S1.

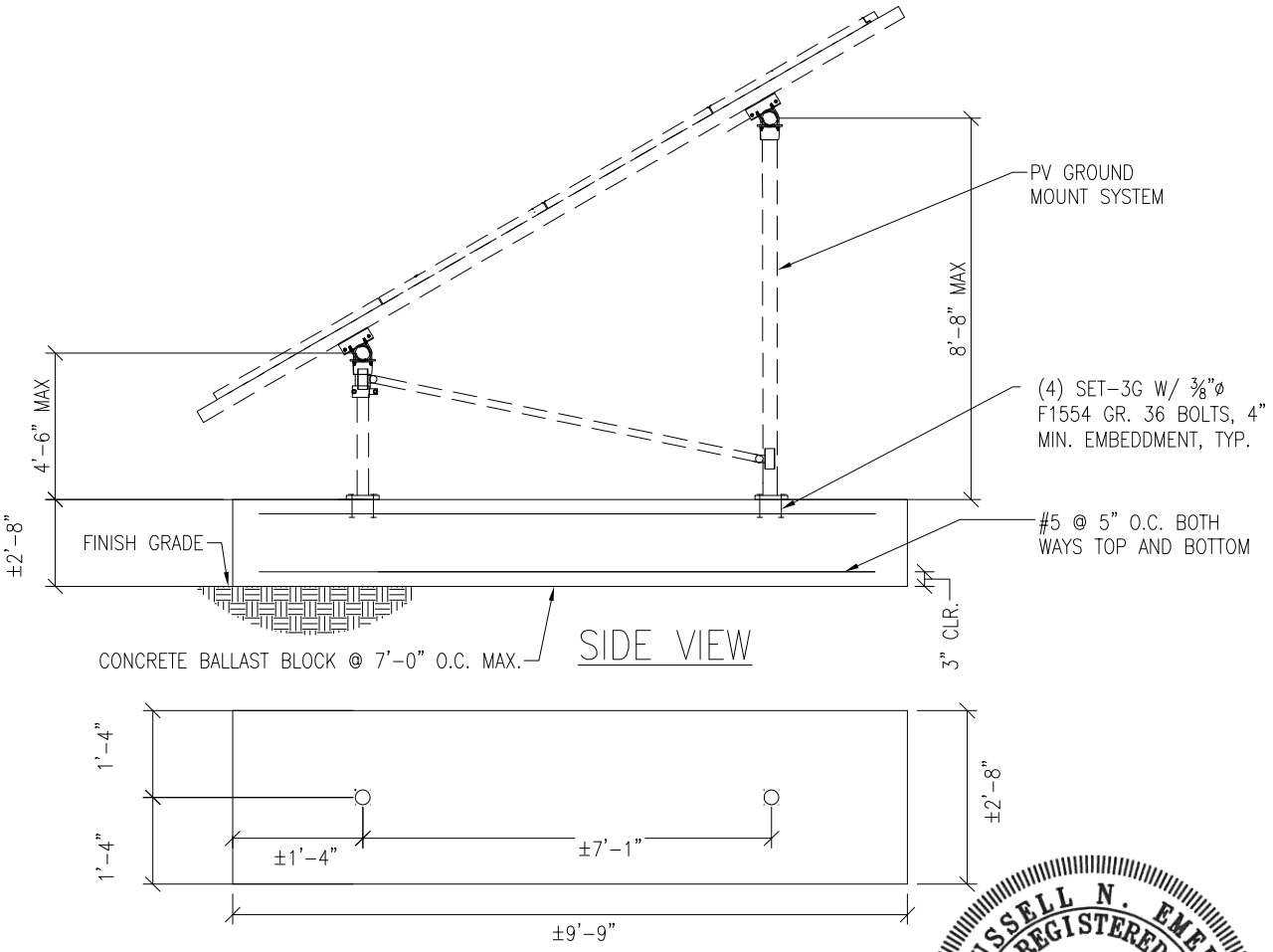

RUSSELL N. EMERY REGISTERED No:11800314 STATE OF INDIANA PROFESSIONAL ENGINEER

Vector Engineers requires that we review each site specific install and is not liable for installs at site specific locations we have not reviewed.

PV ARRAY SECTION

N.T.S.

S4

08/31/2021

651 W GALENA PARK BLVD. #101
DRAPER, UTAH 84020
(801) 990-1775
(801) 990-1776 FAX
WWW.VECTORSE.COM

JOB NO.: U2716.0281.211
SUBJECT: SNOW LOADS

PROJECT: Sunturf Package A10 Ground Mount

SNOW LOADS

Calculations Per:	ASCE 7-16	
Snow Ground Load, p_g [psf]:	50.0	(Section 7.2)
Risk Category:	I	(Table 1.5-1)
Importance Factor, I_S:	0.8	(Table 1.5-2)
Terrain Category:	C	(Section 26.7)
Exposure of Roof:	Fully Exposed	(Table 7-3.1)
Exposure Factor, C_e:	0.9	(Table 7-3.1)
Thermal Factor, C_t:	1.2	(Table 7-3.2)
Flat Roof Snow Load, p_f [psf]:	30	(Equation 7.3-1)
Min. Roof Snow Load, p_m [psf]:	0	(Section 7.3.4)
Panel Slope from Horizontal [°]:	35.0	
Unobstructed Slippery Surface?	Yes	(Section 7.4)
Slope Factor Figure:	Figure 7-2c	(of Figure 7.4-1 - See Section 7.4)
Roof Slope Factor, C_s:	0.64	
Sloped Roof Snow Load, p_s [psf]:	19	(Equation 7.4-1)
Design Snow Load, S [psf]:	19	(1.0 Snow)

JOB NO.: U2716.0281.211
SUBJECT: WIND PRESSURES

PROJECT: Sunturf Package A10 Ground Mount

WIND PRESSURES

Calculations per:	ASCE 7-16	
Design Wind Speed, V [mph]:	115	
Risk Category:	I	(Table 1.5-1)
Exposure Category:	C	(Section 26.7)
Elevation [ft]:	1052.8	
Ground Elevation Factor, K_e:	1.00	(Table 26.9-1)
α:	9.5	(Table 26.11-1)
z_g [ft]:	900	(Table 26.11-1)
Velocity Pressure Exposure Coefficient, K_h:	0.85	(Table 26.10-1)
Topographic Factor, K_{ht}:	1.0	(Section 26.8)
Wind Directionality Factor, K_d:	0.85	(Table 26.6-1)
Internal Pressure Coefficient, GC_{pi} :	0.00	(Figure 26.13-1)
Velocity Pressure, q_h [psf]:	24.43	(Equation 26.10-1)
Gust Effect Factor, G:	0.85	(Section 26.11.4)
Panel Slope [degrees]:	35.0	
Wind Flow:	Clear	
Roof Configuration:	Monoslope	

Wind Pressures in Transverse (N-S) Direction

Net Pressure Coefficients per Figure 27.3-4

Clear Wind Flow	C_{NW}	C_{NL}
Case 1 (γ = 0°, Load Case A)	-1.8	-1.8
Case 2 (γ = 0°, Load Case B)	-2.4	-0.6
Case 3 (γ = 180°, Load Case A)	2.1	2.1
Case 4 (γ = 180°, Load Case B)	2.7	1.1

Design Wind Pressures per Equation 27.3-2 [psf]

Clear Wind Flow	q_hGC_{NW}	q_hGC_{NL}
Case 1 (γ = 0°, Load Case A)	-37.4	-37.4
Case 2 (γ = 0°, Load Case B)	-49.8	-12.5
Case 3 (γ = 180°, Load Case A)	43.6	43.6
Case 4 (γ = 180°, Load Case B)	56.1	22.8
Case 5 (γ = 0°, 16 psf Min. Horiz.)	-16.0	-16.0
Case 6 (γ = 180°, 16 psf Min. Horiz)	16.0	16.0

Foundation Option 1: Drilled Concrete Pier

JOB NO.: U2716.0281.211
SUBJECT: CONC. PIER

PROJECT: Sunturf Package A10 Ground Mount

DRILLED CONCRETE PIER DESIGN

Column Reactions:

Max. Shear, V [k]:	1.6	Max. Down, P_d [k]:	2.8
Max. Moment, M [k-ft]:	0.0	Max. Uplift, P_u [k]:	2.3

Pier Properties:

Pier Shape:	Round		
Pier Diameter, b [ft]:	1.5	Volume of Concrete [ft^3]:	9
Top of Pier Elevation [ft]:	0.00	Volume of Concrete [yd^3]:	0.3
Pier Depth, d [ft]:	5.0	Weight of Concrete [k]:	1.3

Soil Properties:

Allow. Bearing Pressure [psf]:	1,500	Optional Parameters for Uplift:	
1/3 increase for short term loads?	No		
		Skin Friction* [psf]:	250
Lateral Bearing, S [pcf]:	150	Top Length to Ignore [ft]:	0
Max. Lateral Bearing (opt'l) [psf]:		1/3 increase for short term loads?	No
Top Depth to Ignore [ft]:	0		
1/3 increase for short term loads?	No	Combine w/ Bearing:	No
1/2" deflection at t/o pier allowed:	Yes		

*per IBC Section 1810.3.3.1.4

Check Bearing:

Bearing Capacity [k]:	5.9	**Bearing capacity OK.**

Check Uplift:

Uplift Capacity [k]:	7.1	**Uplift capacity OK.**

Check Lateral Bearing:

Top of Pier Constrained?:	No	IBC Section1807.3.2.1
Applied Lateral Force, P [lb]:	1,588	
Point of Application, h [ft]:	0.0	
$S_{\_max}$ [psf]:		
S [psf]:	500	
A = 2.34*P/(Sb):	4.95	
Required Pier Depth, d_{reqd} [ft]:	5.00	IBC Eq. 18-1

Result: **Lateral bearing capacity OK.**

Foundation Option 2: Helical Pier

- The ground screws and helical piers must be tested to 1.5 times uplift and 2.0 times lateral reactions found in the table below. A minimum of one ground screw or helical pier must be tested.

Load (ASD)	Value (lbs)	Factor of Safety	Test Value (lbs)
UPLIFT	2277	1.5	3415
LATERAL	1588	2	3176

Foundation Option 3: Ground Screw

- The ground screws and helical piers must be tested to 1.5 times uplift and 2.0 times lateral reactions found in the table below. A minimum of one ground screw or helical pier must be tested.

Load (ASD)	Value (lbs)	Factor of Safety	Test Value (lbs)
UPLIFT	2277	1.5	3415
LATERAL	1588	2	3176

Foundation Option 4: Ballasted Block

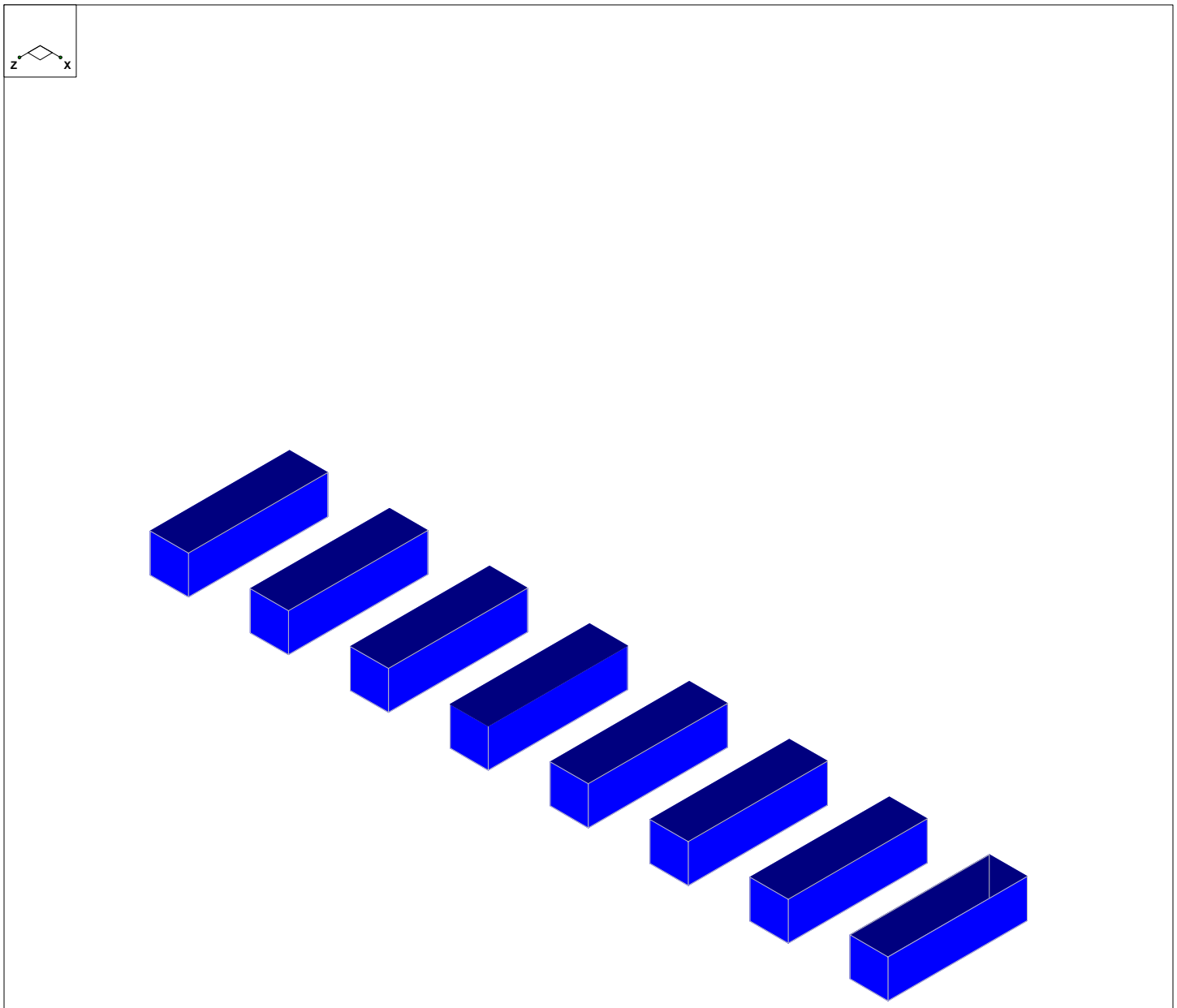

Results for LC 2, 1.0 D

Vector Structural Engineeri...		SK - 1
STB	Ground Mount	Feb 17, 2021 at 10:17 AM
U2716.0281.211		Sunmodo Sunturf A10.r3d

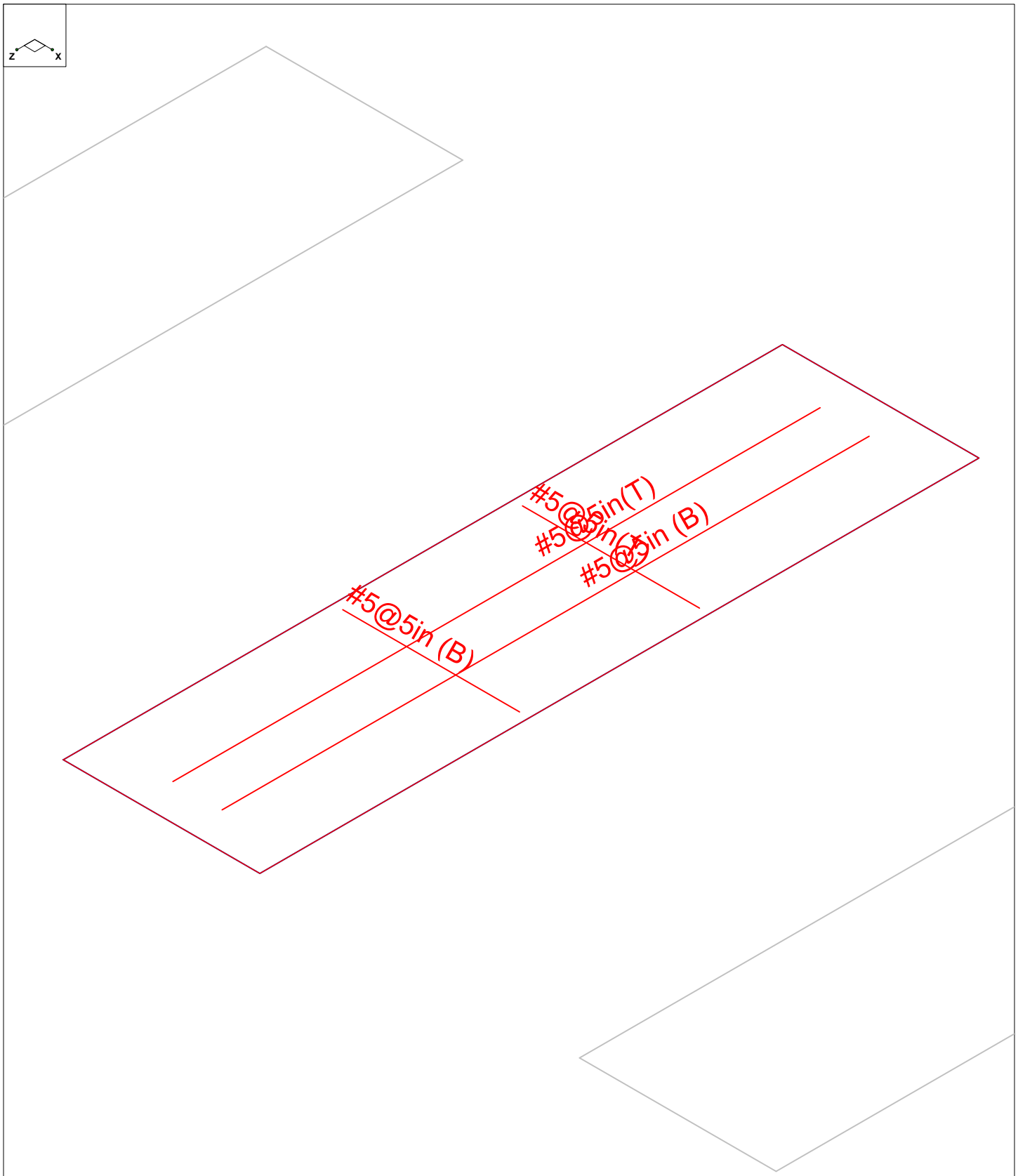

Results for LC 2, 1.0 D

Vector Structural Engineeri...		SK - 2
STB	Ground Mount	Feb 17, 2021 at 10:18 AM
U2716.0281.211		Sunmodo Sunturf A10.r3d

(Global) Model Settings

Display Sections for Member Calcs	5
Max Internal Sections for Member Calcs	100
Mesh Size (in)	12
Max Iterations	10
Merge Tolerance (in)	.12
Solver	Sparse Accelerated
Coefficient of Friction	.3
No. of Shear Regions	4
Shear Region Spacing Increment (in)	4
Min 1 Bar Dia Spacing for Beams?	No
Optimize footings for OTM / Sliding?	Yes
Parme Beta Factor	.65
Pile Safety Factor	3
Concrete Stress Block	0
Concrete Rebar Set	Rectangular
Concrete Code	ASTM A615
HR Steel Pile Code	ACI 318-14
Wood Pile Code	AISC 14th (360-10): ASD AWC NDS-15: ASD

Concrete Properties

	Label	E [ksi]	G [ksi]	Nu	Therm (/...	Density[k/ft^3]	f'c[psi]	Lambda	Flex Stee...	Shear St...
1	Conc3000NW	3156	1372	.15	.6	.145	3000	1	60000	60000
2	Conc3500NW	3409	1482	.15	.6	.145	3500	1	60000	60000
3	Conc4000NW	3644	1584	.15	.6	.145	4000	1	60000	60000
4	Conc3000LW	2085	907	.15	.6	.11	3000	.75	60000	60000
5	Conc3500LW	2252	979	.15	.6	.11	3500	.75	60000	60000
6	Conc4000LW	2408	1047	.15	.6	.11	4000	.75	60000	60000
7	Conc2500NW	3156	1372	.15	.6	.145	2500	1	60000	60000

General Design Parameters

	Label	Max Bending Chk	Max Shear Chk	Top Cover[in]	Bottom Cover[in]
1	Typical	1	1	3	3

Slab Rebar Parameters

	Label	Top Bar	Bottom Bar	Max Top Bar Sp...	Min Top Bar Sp...	Max Bot Bar Sp...	Min Bot Bar Sp...	Spacing Incr...	Rebar Options
1	Typical	#5	#5	18	5	18	5	1	Optimize

Soil Definitions

	Label	Subgrade Modulus[k/ft^3]	Allowable Bearing[psf]	Depth Properties	Default?
1	Default	172.8	1500	None	Yes

Point Loads and Moments (Cat 1 : DL)

	Label	Direction	Magnitude[lb,lb-ft]
1	R3D_N1_1	X	-3.842
2	R3D_N1_1	Y	209.812
3	R3D_N2_1	Y	175.765
4	R3D_N123_1	X	3.941
5	R3D_N123_1	Y	209.061
6	R3D_N124_1	Y	176.377
7	R3D_N123A	Y	225.01
8	R3D_N124A	Y	209.581

Point Loads and Moments (Cat 1 : DL) (Continued)

	Label	Direction	Magnitude[lb,lb-ft]
9	R3D_N129	Y	220.189
10	R3D_N130	Y	207.722
11	R3D_N135	Y	220.687
12	R3D_N136	Y	208.09
13	R3D_N141	Y	220.765
14	R3D_N142	Y	208.047
15	R3D_N147B	Y	219.812
16	R3D_N148A	Y	208.017
17	R3D_N153A	Y	227.292
18	R3D_N154A	Y	207.505

Point Loads and Moments (Cat 6 : RLL)

	Label	Direction	Magnitude[lb,lb-ft]
1	R3D_N1_1	X	-15.325
2	R3D_N1_1	Y	678.014
3	R3D_N1_1	Z	-3.367
4	R3D_N2_1	Y	647.985
5	R3D_N123_1	X	15.771
6	R3D_N123_1	Y	673.993
7	R3D_N123_1	Z	-3.713
8	R3D_N124_1	X	-2.785
9	R3D_N124_1	Y	651.192
10	R3D_N123A	Y	743.201
11	R3D_N123A	Z	2.64
12	R3D_N124A	X	3.358
13	R3D_N124A	Y	788.505
14	R3D_N129	Y	781.618
15	R3D_N130	X	2.062
16	R3D_N130	Y	783.922
17	R3D_N135	Y	778.269
18	R3D_N136	Y	784.392
19	R3D_N141	Y	778.659
20	R3D_N142	Y	784.165
21	R3D_N147B	Y	779.69
22	R3D_N148A	X	-1.858
23	R3D_N148A	Y	785.458
24	R3D_N153A	Y	755.34
25	R3D_N153A	Z	3.333
26	R3D_N154A	X	-1.943
27	R3D_N154A	Y	777.722

Point Loads and Moments (Cat 16 : OL1)

	Label	Direction	Magnitude[lb,lb-ft]
1	R3D_N1_1	X	55.924
2	R3D_N1_1	Y	-3156.067
3	R3D_N1_1	Z	1910.998
4	R3D_N2_1	X	1.429
5	R3D_N2_1	Y	492.566
6	R3D_N2_1	Z	-103.702
7	R3D_N123_1	X	-56.394
8	R3D_N123_1	Y	-3156.283
9	R3D_N123_1	Z	1911.298
10	R3D_N124_1	X	-1.308
11	R3D_N124_1	Y	491.997
12	R3D_N124_1	Z	-103.711
13	R3D_N123A	X	-2.437

Point Loads and Moments (Cat 16 : OL1) (Continued)

	Label	Direction	Magnitude[lb,lb-ft]
14	R3D_N123A	Y	-3582.428
15	R3D_N123A	Z	2254.216
16	R3D_N124A	X	4.678
17	R3D_N124A	Y	620.916
18	R3D_N124A	Z	-113.097
19	R3D_N129	X	-2.157
20	R3D_N129	Y	-3687.148
21	R3D_N129	Z	2265.39
22	R3D_N130	Y	602.936
23	R3D_N130	Z	-116.12
24	R3D_N135	Y	-3685.469
25	R3D_N135	Z	2269.628
26	R3D_N136	Y	611.547
27	R3D_N136	Z	-116.921
28	R3D_N141	Y	-3685.472
29	R3D_N141	Z	2269.653
30	R3D_N142	Y	611.594
31	R3D_N142	Z	-116.922
32	R3D_N147B	X	2.22
33	R3D_N147B	Y	-3687.575
34	R3D_N147B	Z	2265.486
35	R3D_N148A	Y	603.046
36	R3D_N148A	Z	-116.121
37	R3D_N153A	X	2.459
38	R3D_N153A	Y	-3580.991
39	R3D_N153A	Z	2253.982
40	R3D_N154A	X	-4.618
41	R3D_N154A	Y	620.608
42	R3D_N154A	Z	-113.095

Point Loads and Moments (Cat 17 : OL2)

	Label	Direction	Magnitude[lb,lb-ft]
1	R3D_N1_1	X	68.373
2	R3D_N1_1	Y	-3450.36
3	R3D_N1_1	Z	1590.801
4	R3D_N2_1	X	5.787
5	R3D_N2_1	Y	1196.348
6	R3D_N2_1	Z	-86.312
7	R3D_N123_1	X	-68.956
8	R3D_N123_1	Y	-3450.98
9	R3D_N123_1	Z	1591.104
10	R3D_N124_1	X	-5.672
11	R3D_N124_1	Y	1196.039
12	R3D_N124_1	Z	-86.321
13	R3D_N123A	X	-3.027
14	R3D_N123A	Y	-3898.124
15	R3D_N123A	Z	1879.14
16	R3D_N124A	X	9.766
17	R3D_N124A	Y	1467.345
18	R3D_N124A	Z	-94.285
19	R3D_N129	X	-2.627
20	R3D_N129	Y	-4019.152
21	R3D_N129	Z	1885.931
22	R3D_N130	X	3.769
23	R3D_N130	Y	1449.063
24	R3D_N130	Z	-96.706

Point Loads and Moments (Cat 17 : OL2) (Continued)

	Label	Direction	Magnitude[lb,lb-ft]
25	R3D_N135	Y	-4016.856
26	R3D_N135	Z	1890.391
27	R3D_N136	X	1.674
28	R3D_N136	Y	1457.673
29	R3D_N136	Z	-97.362
30	R3D_N141	Y	-4016.863
31	R3D_N141	Z	1890.428
32	R3D_N142	X	-1.578
33	R3D_N142	Y	1457.725
34	R3D_N142	Z	-97.363
35	R3D_N147B	X	2.705
36	R3D_N147B	Y	-4019.634
37	R3D_N147B	Z	1886.009
38	R3D_N148A	X	-3.666
39	R3D_N148A	Y	1449.169
40	R3D_N148A	Z	-96.707
41	R3D_N153A	X	3.056
42	R3D_N153A	Y	-3896.451
43	R3D_N153A	Z	1878.93
44	R3D_N154A	X	-9.676
45	R3D_N154A	Y	1466.994
46	R3D_N154A	Z	-94.283

Point Loads and Moments (Cat 18 : OL3)

	Label	Direction	Magnitude[lb,lb-ft]
1	R3D_N1_1	X	-65.195
2	R3D_N1_1	Y	3679.265
3	R3D_N1_1	Z	-2227.794
4	R3D_N2_1	X	-1.666
5	R3D_N2_1	Y	-574.221
6	R3D_N2_1	Z	120.893
7	R3D_N123_1	X	65.743
8	R3D_N123_1	Y	3679.517
9	R3D_N123_1	Z	-2228.144
10	R3D_N124_1	X	1.524
11	R3D_N124_1	Y	-573.558
12	R3D_N124_1	Z	120.904
13	R3D_N123A	X	2.841
14	R3D_N123A	Y	4176.306
15	R3D_N123A	Z	-2627.91
16	R3D_N124A	X	-5.453
17	R3D_N124A	Y	-723.849
18	R3D_N124A	Z	131.846
19	R3D_N129	X	2.514
20	R3D_N129	Y	4298.387
21	R3D_N129	Z	-2640.936
22	R3D_N130	Y	-702.888
23	R3D_N130	Z	135.37
24	R3D_N135	Y	4296.429
25	R3D_N135	Z	-2645.877
26	R3D_N136	Y	-712.927
27	R3D_N136	Z	136.303
28	R3D_N141	Y	4296.433
29	R3D_N141	Z	-2645.905
30	R3D_N142	Y	-712.981
31	R3D_N142	Z	136.304

Point Loads and Moments (Cat 18 : OL3) (Continued)

	Label	Direction	Magnitude[lb,lb-ft]
32	R3D_N147B	X	-2.588
33	R3D_N147B	Y	4298.884
34	R3D_N147B	Z	-2641.048
35	R3D_N148A	Y	-703.017
36	R3D_N148A	Z	135.371
37	R3D_N153A	X	-2.867
38	R3D_N153A	Y	4174.631
39	R3D_N153A	Z	-2627.637
40	R3D_N154A	X	5.384
41	R3D_N154A	Y	-723.49
42	R3D_N154A	Z	131.843

Point Loads and Moments (Cat 19 : OL4)

	Label	Direction	Magnitude[lb,lb-ft]
1	R3D_N1_1	X	-39.533
2	R3D_N1_1	Y	2595.468
3	R3D_N1_1	Z	-2016.499
4	R3D_N2_1	X	2.596
5	R3D_N2_1	Y	182.231
6	R3D_N2_1	Z	109.44
7	R3D_N123_1	X	39.856
8	R3D_N123_1	Y	2595.304
9	R3D_N123_1	Z	-2016.769
10	R3D_N124_1	X	-2.712
11	R3D_N124_1	Y	182.979
12	R3D_N124_1	Z	109.448
13	R3D_N123A	X	1.68
14	R3D_N123A	Y	2962.482
15	R3D_N123A	Z	-2376.321
16	R3D_N124A	Y	193.344
17	R3D_N124A	Z	119.219
18	R3D_N129	X	1.533
19	R3D_N129	Y	3042.76
20	R3D_N129	Z	-2390.352
21	R3D_N130	X	2.444
22	R3D_N130	Y	209.357
23	R3D_N130	Z	122.494
24	R3D_N135	Y	3041.79
25	R3D_N135	Z	-2393.992
26	R3D_N136	Y	201.558
27	R3D_N136	Z	123.347
28	R3D_N141	Y	3041.79
29	R3D_N141	Z	-2394.003
30	R3D_N142	Y	201.521
31	R3D_N142	Z	123.348
32	R3D_N147B	X	-1.576
33	R3D_N147B	Y	3043.097
34	R3D_N147B	Z	-2390.456
35	R3D_N148A	X	-2.492
36	R3D_N148A	Y	209.254
37	R3D_N148A	Z	122.495
38	R3D_N153A	X	-1.694
39	R3D_N153A	Y	2961.391
40	R3D_N153A	Z	-2376.087
41	R3D_N154A	Y	193.585
42	R3D_N154A	Z	119.216

Slabs

	Label	Thickness [in]	Material	Local Axis Angle ...	Analysis Offset [in]	Passive Pressur...	Soil Overburden [psf]
1	S1	32	Conc2500NW	0	0	0	0
2	S2	32	Conc2500NW	0	0	0	0
3	S3	32	Conc2500NW	0	0	0	0
4	S4	32	Conc2500NW	0	0	0	0
5	S5	32	Conc2500NW	0	0	0	0
6	S6	32	Conc2500NW	0	0	0	0
7	S7	32	Conc2500NW	0	0	0	0
8	S8	32	Conc2500NW	0	0	0	0

Load Combinations

	Label	Solve	Service	A..	SF	Cat..	Fa...	Cat..	Fa...	Cat..	Fa...	Cat..	Fa...	Cat..	Fa...	Cat..	Fa...	Cat..	Fa...	Cat..	Fa...	C...	F...	C...	F...
1	ASD Loads																								
2	1.0 D	Yes	Yes		1.5	DL	1																		
3	1.0 D + 1....	Yes	Yes		1.5	DL	1	RLL	1																
4	1.0 D + 0....	Yes	Yes		1.5	DL	1	RLL		OL1	.6														
5	1.0 D + 0....	Yes	Yes		1.5	DL	1	RLL		OL2	.6														
6	1.0 D + 0....	Yes	Yes		1.5	DL	1	RLL		OL3	.6														
7	1.0 D + 0....	Yes	Yes		1.5	DL	1	RLL		OL4	.6														
8	1.0 D + 0....	Yes	Yes		1.5	DL	1	RLL	.75	OL1	.45														
9	1.0 D + 0....	Yes	Yes		1.5	DL	1	RLL	.75	OL2	.45														
10	1.0 D + 0....	Yes	Yes		1.5	DL	1	RLL	.75	OL3	.45														
11	1.0 D + 0....	Yes	Yes		1.5	DL	1	RLL	.75	OL4	.45														
12	0.6 D + 0....	Yes	Yes			DL	.6	RLL		OL1	.6														
13	0.6 D + 0....	Yes	Yes			DL	.6	RLL		OL2	.6														
14	0.6 D + 0....	Yes	Yes			DL	.6	RLL		OL3	.6														
15	0.6 D + 0....	Yes	Yes			DL	.6	RLL		OL4	.6														
16																									
17	LRFD Loa...																								
18	1.4 D	Yes				DL	1.4	RLL																	
19	1.2 D + 1....	Yes				DL	1.2	RLL	1.6	OL1	.5														
20	1.2 D + 1....	Yes				DL	1.2	RLL	1.6	OL2	.5														
21	1.2 D + 1....	Yes				DL	1.2	RLL	1.6	OL3	.5														
22	1.2 D + 1....	Yes				DL	1.2	RLL	1.6	OL4	.5														
23	1.2 D + 1....	Yes				DL	1.2	RLL		OL1	1														
24	1.2 D + 1....	Yes				DL	1.2	RLL		OL2	1														
25	1.2 D + 1....	Yes				DL	1.2	RLL		OL3	1														
26	1.2 D + 1....	Yes				DL	1.2	RLL		OL4	1														
27	0.9 D + 1....	Yes				DL	.9	RLL		OL1	1														
28	0.9 D + 1....	Yes				DL	.9	RLL		OL2	1														
29	0.9 D + 1....	Yes				DL	.9	RLL		OL3	1														
30	0.9 D + 1....	Yes				DL	.9	RLL		OL4	1														

Design Strips

	Label	Rebar Angle from Pl...	No. of Design Cuts	Design Rule
1	DS1	0	50	Typical
2	DS2	90	50	Typical

Load Categories

	Category	Point Loads	Line Loads	Area Loads
1	DL	18		
2	RLL	27		
3	OL1	42		
4	OL2	46		
5	OL3	42		
6	OL4	42		

Strip Reinforcing

	Label	UC Top	LC	Top Bars	Governing ...	UC Bot	LC	Bot B...	Gover...	UC Shear	LC	Governing De...
1	DS1	.01	21	#5@5in	DS1-X25	.01	28	#5@5in	DS1-...	.023	28	DS1-X15
2	DS2	0	27	#5@5in	DS2-X26	.002	21	#5@5in	DS2-...	.005	21	DS2-X25

Slab Overturning Safety Factors

	LC	Slab	Angle[deg]	Mo-xx[lb-ft]	Ms-xx[lb-ft]	Mo-zz[lb-ft]	Ms-zz[lb-ft]	Ms-xx/Mo-xx	Ms-zz/Mo-zz
1	2	S1	0	0	50769.271	0	13928.815	9.999+	9.999+
2	2	S2	0	0	51074.156	0	13983.923	9.999+	9.999+
3	2	S3	0	0	51052.082	0	13975.016	9.999+	9.999+
4	2	S4	0	0	51055.842	0	13976.171	9.999+	9.999+
5	2	S5	0	0	51055.581	0	13976.216	9.999+	9.999+
6	2	S6	0	0	51054.058	0	13974.906	9.999+	9.999+
7	2	S7	0	0	51059.721	0	13984.197	9.999+	9.999+
8	2	S8	0	0	50773.421	0	13907.876	9.999+	9.999+
9	3	S1	0	0	57118.183	0	15737.681	9.999+	9.999+
10	3	S2	0	0	58708.711	0	16017.243	9.999+	9.999+
11	3	S3	0	0	58692.248	0	16056.904	9.999+	9.999+
12	3	S4	0	0	58695.492	0	16059.719	9.999+	9.999+
13	3	S5	0	0	58693.838	0	16059.981	9.999+	9.999+
14	3	S6	0	0	58704.576	0	16066.724	9.999+	9.999+
15	3	S7	0	0	58621.548	0	16033.46	9.999+	9.999+
16	3	S8	0	0	57143.038	0	15640.16	9.999+	9.999+
17	4	S1	0	18435.79	51010.444	2222.567	13928.815	2.767	6.267
18	4	S2	0	21020.355	51183.454	2372.794	13983.923	2.435	5.893
19	4	S3	0	21576.619	51140.399	2470.82	13975.016	2.37	5.656
20	4	S4	0	21566.751	51145.083	2459.137	13976.171	2.371	5.683
21	4	S5	0	21566.769	51145.674	2459.103	13976.216	2.372	5.683
22	4	S6	0	21578.837	51137.614	2471.174	13974.906	2.37	5.655
23	4	S7	0	21012.974	51199.891	2371.761	13984.197	2.437	5.896
24	4	S8	0	18437.804	51004.945	2223.751	13928.895	2.766	6.264
25	5	S1	0	18874.451	51010.444	1921.866	13928.815	2.703	7.248
26	5	S2	0	21367.45	51183.454	1955.407	13983.923	2.395	7.151
27	5	S3	0	22000.261	51140.399	2057.899	13975.016	2.325	6.791
28	5	S4	0	21987.865	51145.083	2050.025	13976.171	2.326	6.818
29	5	S5	0	21987.914	51145.674	2049.836	13976.216	2.326	6.818
30	5	S6	0	22002.731	51137.614	2057.908	13974.906	2.324	6.791
31	5	S7	0	21358.948	51199.891	1954.157	13984.197	2.397	7.156
32	5	S8	0	18878.299	51004.945	1923.357	13928.895	2.702	7.242
33	6	S1	0	3327.453	50769.271	0	16519.829	9.999+	9.999+
34	6	S2	0	4308.103	51074.156	0	16750.068	9.999+	9.999+
35	6	S3	0	4119.791	51052.082	0	16847.392	9.999+	9.999+
36	6	S4	0	4178.463	51055.842	0	16842.973	9.999+	9.999+
37	6	S5	0	4178.777	51055.581	0	16842.978	9.999+	9.999+
38	6	S6	0	4120.219	51054.058	0	16855.74	9.999+	9.999+
39	6	S7	0	4307.197	51059.721	0	16741.083	9.999+	9.999+
40	6	S8	0	3324.447	50773.421	0	16285.016	9.999+	9.999+
41	7	S1	0	54.659	50769.271	0	16210.074	9.999+	9.999+
42	7	S2	0	265	51074.156	0	16505.895	9.999+	9.999+
43	7	S3	0	137.119	51052.082	0	16570.345	9.999+	9.999+
44	7	S4	0	181.741	51055.842	0	16570.849	9.999+	9.999+
45	7	S5	0	181.942	51055.581	0	16570.865	9.999+	9.999+
46	7	S6	0	137.537	51054.058	0	16583.295	9.999+	9.999+
47	7	S7	0	264.285	51059.721	0	16510.887	9.999+	9.999+
48	7	S8	0	51.436	50773.421	0	16071.071	9.999+	9.999+
49	8	S1	0	13826.843	55945.148	1666.925	15285.465	4.046	9.17
50	8	S2	0	15765.266	56658.158	1779.596	15508.913	3.594	8.715
51	8	S3	0	16182.464	56858.31	1853.115	15544.682	3.514	8.388

Slab Overturning Safety Factors (Continued)

	LC	Slab	Angle[deg]	Mo-xx[lb-ft]	Ms-xx[lb-ft]	Mo-zz[lb-ft]	Ms-zz[lb-ft]	Ms-xx/Mo-xx	Ms-zz/Mo-zz
52	8	S4	0	16175.063	56842.323	1844.353	15538.832	3.514	8.425
53	8	S5	0	16175.077	56845.148	1844.327	15539.04	3.514	8.425
54	8	S6	0	16184.128	56844.89	1853.381	15543.77	3.512	8.387
55	8	S7	0	15759.731	56739.058	1778.82	15513.373	3.6	8.721
56	8	S8	0	13828.353	55918.164	1667.813	15280.051	4.044	9.162
57	9	S1	0	14155.839	55945.148	1441.399	15285.465	3.952	9.999+
58	9	S2	0	16025.588	56658.158	1466.555	15508.913	3.535	9.999+
59	9	S3	0	16500.196	56858.31	1543.424	15536.432	3.446	9.999+
60	9	S4	0	16490.899	56842.323	1537.519	15538.832	3.447	9.999+
61	9	S5	0	16490.936	56845.148	1537.377	15539.04	3.447	9.999+
62	9	S6	0	16502.049	56844.89	1543.431	15536.338	3.445	9.999+
63	9	S7	0	16019.211	56739.058	1465.618	15513.373	3.542	9.999+
64	9	S8	0	14158.724	55918.164	1442.518	15280.051	3.949	9.999+
65	10	S1	0	2495.59	55530.955	0	17228.725	9.999+	9.999+
66	10	S2	0	3231.078	56800.072	0	17583.522	9.999+	9.999+
67	10	S3	0	3089.843	56782.206	0	17690.714	9.999+	9.999+
68	10	S4	0	3133.847	56785.58	0	17688.933	9.999+	9.999+
69	10	S5	0	3134.083	56784.274	0	17689.111	9.999+	9.999+
70	10	S6	0	3090.164	56791.947	0	17704.395	9.999+	9.999+
71	10	S7	0	3230.398	56731.091	0	17588.809	9.999+	9.999+
72	10	S8	0	2493.336	55550.634	0	16989.944	9.999+	9.999+
73	11	S1	0	40.994	55530.955	0	16996.408	9.999+	9.999+
74	11	S2	0	198.75	56800.072	0	17400.392	9.999+	9.999+
75	11	S3	0	102.839	56782.206	0	17482.929	9.999+	9.999+
76	11	S4	0	136.306	56785.58	0	17484.841	9.999+	9.999+
77	11	S5	0	136.456	56784.274	0	17485.027	9.999+	9.999+
78	11	S6	0	103.153	56791.947	0	17500.062	9.999+	9.999+
79	11	S7	0	198.214	56731.091	0	17416.162	9.999+	9.999+
80	11	S8	0	38.577	55550.634	0	16829.485	9.999+	9.999+
81	12	S1	0	18435.79	30606.266	2222.567	8357.289	1.66	3.76
82	12	S2	0	21020.355	30710.073	2372.794	8390.354	1.461	3.536
83	12	S3	0	21576.619	30684.239	2470.82	8385.01	1.422	3.394
84	12	S4	0	21566.751	30687.05	2459.137	8385.703	1.423	3.41
85	12	S5	0	21566.769	30687.404	2459.103	8385.73	1.423	3.41
86	12	S6	0	21578.837	30682.568	2471.174	8384.943	1.422	3.393
87	12	S7	0	21012.974	30719.935	2371.761	8390.518	1.462	3.538
88	12	S8	0	18437.804	30602.967	2223.751	8357.337	1.66	3.758
89	13	S1	0	18874.451	30606.266	1921.866	8357.289	1.622	4.349
90	13	S2	0	21367.45	30710.073	1955.407	8390.354	1.437	4.291
91	13	S3	0	22000.261	30684.239	2057.899	8385.01	1.395	4.075
92	13	S4	0	21987.865	30687.05	2050.025	8385.703	1.396	4.091
93	13	S5	0	21987.914	30687.404	2049.836	8385.73	1.396	4.091
94	13	S6	0	22002.731	30682.568	2057.908	8384.943	1.394	4.074
95	13	S7	0	21358.948	30719.935	1954.157	8390.518	1.438	4.294
96	13	S8	0	18878.299	30602.967	1923.357	8357.337	1.621	4.345
97	14	S1	0	3327.453	30461.563	0	10948.303	9.155	9.999+
98	14	S2	0	4308.103	30644.494	0	11156.499	7.113	9.999+
99	14	S3	0	4119.791	30631.249	0	11257.386	7.435	9.999+
100	14	S4	0	4178.463	30633.505	0	11252.505	7.331	9.999+
101	14	S5	0	4178.777	30633.348	0	11252.491	7.331	9.999+
102	14	S6	0	4120.219	30632.435	0	11265.777	7.435	9.999+
103	14	S7	0	4307.197	30635.832	0	11147.404	7.113	9.999+
104	14	S8	0	3324.447	30464.053	0	10721.866	9.164	9.999+
105	15	S1	0	54.659	30461.563	0	10638.548	9.999+	9.999+
106	15	S2	0	265	30644.494	0	10912.326	9.999+	9.999+
107	15	S3	0	137.119	30631.249	0	10980.339	9.999+	9.999+
108	15	S4	0	181.741	30633.505	0	10980.381	9.999+	9.999+

Slab Overturning Safety Factors (Continued)

	LC	Slab	Angle[deg]	Mo-xx[lb-ft]	Ms-xx[lb-ft]	Mo-zz[lb-ft]	Ms-zz[lb-ft]	Ms-xx/Mo-xx	Ms-zz/Mo-zz
109	15	S5	0	181.942	30633.348	0	10980.379	9.999+	9.999+
110	15	S6	0	137.537	30632.435	0	10993.333	9.999+	9.999+
111	15	S7	0	264.285	30635.832	0	10917.209	9.999+	9.999+
112	15	S8	0	51.436	30464.053	0	10507.92	9.999+	9.999+

Slab Sliding Safety Factors

	LC	Slab	Angle[deg]	Va-xx[lb]	Vr-xx[lb]	Va-zz[lb]	Vr-zz[lb]	SR-xx	SR-zz
1	2	S1	0	3.842	3131.678	0	3131.678	9.999+	9.999+
2	2	S2	0	0	3146.383	0	3146.383	9.999+	9.999+
3	2	S3	0	0	3144.379	0	3144.379	9.999+	9.999+
4	2	S4	0	0	3144.638	0	3144.638	9.999+	9.999+
5	2	S5	0	0	3144.649	0	3144.649	9.999+	9.999+
6	2	S6	0	0	3144.354	0	3144.354	9.999+	9.999+
7	2	S7	0	0	3146.444	0	3146.444	9.999+	9.999+
8	2	S8	0	3.941	3131.637	0	3131.637	9.999+	9.999+
9	3	S1	0	19.167	3529.478	3.367	3529.478	9.999+	9.999+
10	3	S2	0	3.358	3605.894	2.64	3605.894	9.999+	9.999+
11	3	S3	0	2.062	3614.041	0	3614.041	9.999+	9.999+
12	3	S4	0	0	3613.437	0	3613.437	9.999+	9.999+
13	3	S5	0	0	3613.496	0	3613.496	9.999+	9.999+
14	3	S6	0	1.858	3613.898	0	3613.898	9.999+	9.999+
15	3	S7	0	1.943	3606.363	3.333	3606.363	9.999+	9.999+
16	3	S8	0	16.927	3529.192	3.713	3529.192	9.999+	9.999+
17	4	S1	0	30.57	2652.248	1084.377	2652.248	9.999+	2.446
18	4	S2	0	1.344	2613.311	1284.671	2613.311	9.999+	2.034
19	4	S3	0	1.294	2589.221	1289.562	2589.221	9.999+	2.008
20	4	S4	0	0	2591.333	1291.625	2591.333	9.999+	2.006
21	4	S5	0	0	2591.35	1291.639	2591.35	9.999+	2.006
22	4	S6	0	1.332	2589.139	1289.619	2589.139	9.999+	2.008
23	4	S7	0	1.295	2613.575	1284.532	2613.575	9.999+	2.035
24	4	S8	0	30.68	2652.065	1084.552	2652.065	9.999+	2.445
25	5	S1	0	40.654	2725.956	902.694	2725.956	9.999+	3.02
26	5	S2	0	4.044	2708.842	1070.913	2708.842	9.999+	2.529
27	5	S3	0	.685	2681.763	1073.535	2681.763	9.999+	2.498
28	5	S4	0	1.004	2683.985	1075.817	2683.985	9.999+	2.495
29	5	S5	0	.947	2684.004	1075.839	2684.004	9.999+	2.495
30	5	S6	0	.576	2681.67	1073.581	2681.67	9.999+	2.498
31	5	S7	0	3.972	2709.142	1070.788	2709.142	9.999+	2.53
32	5	S8	0	40.836	2725.747	902.87	2725.747	9.999+	3.019
33	6	S1	0	43.959	3690.586	1264.14	3690.586	9.999+	2.919
34	6	S2	0	1.567	3767.825	1497.638	3767.825	9.999+	2.516
35	6	S3	0	1.509	3791.568	1503.339	3791.568	9.999+	2.522
36	6	S4	0	0	3789.669	1505.744	3789.669	9.999+	2.517
37	6	S5	0	0	3789.67	1505.761	3789.67	9.999+	2.517
38	6	S6	0	1.553	3791.61	1503.406	3791.61	9.999+	2.522
39	6	S7	0	1.51	3767.65	1497.476	3767.65	9.999+	2.516
40	6	S8	0	44.301	3690.709	1264.344	3690.709	9.999+	2.919
41	7	S1	0	26.004	3631.664	1144.235	3631.664	9.999+	3.174
42	7	S2	0	1.008	3714.431	1354.261	3714.431	9.999+	2.743
43	7	S3	0	2.387	3729.76	1360.715	3729.76	9.999+	2.741
44	7	S4	0	0	3728.441	1362.387	3728.441	9.999+	2.737
45	7	S5	0	0	3728.445	1362.393	3728.445	9.999+	2.737
46	7	S6	0	2.441	3729.777	1360.776	3729.777	9.999+	2.741
47	7	S7	0	1.016	3714.34	1354.123	3714.34	9.999+	2.743
48	7	S8	0	26.228	3631.727	1144.392	3631.727	9.999+	3.173
49	8	S1	0	10.473	3070.455	810.758	3070.455	9.999+	3.787

Slab Sliding Safety Factors (Continued)

	LC	Slab	Angle[deg]	Va-xx[lb]	Vr-xx[lb]	Va-zz[lb]	Vr-zz[lb]	SR-xx	SR-zz
50	8	S2	0	3.527	3091.212	965.484	3091.212	9.999+	3.202
51	8	S3	0	.576	3080.257	967.171	3080.257	9.999+	3.185
52	8	S4	0	0	3081.258	968.718	3081.258	9.999+	3.181
53	8	S5	0	0	3081.31	968.729	3081.31	9.999+	3.181
54	8	S6	0	.395	3080.101	967.214	3080.101	9.999+	3.185
55	8	S7	0	2.429	3091.732	965.899	3091.732	9.999+	3.201
56	8	S8	0	12.285	3070.125	810.629	3070.125	9.999+	3.787
57	9	S1	0	18.036	3125.736	674.495	3125.736	9.999+	4.634
58	9	S2	0	5.551	3162.861	805.165	3162.861	9.999+	3.928
59	9	S3	0	2.061	3149.663	805.151	3149.663	9.999+	3.912
60	9	S4	0	.753	3150.747	806.863	3150.747	9.999+	3.905
61	9	S5	0	.71	3150.8	806.879	3150.8	9.999+	3.905
62	9	S6	0	1.826	3149.499	805.186	3149.499	9.999+	3.912
63	9	S7	0	4.436	3163.407	805.591	3163.407	9.999+	3.927
64	9	S8	0	19.902	3125.386	674.368	3125.386	9.999+	4.635
65	10	S1	0	45.423	3849.209	950.631	3849.209	9.999+	4.049
66	10	S2	0	1.343	3957.098	1121.249	3957.098	9.999+	3.529
67	10	S3	0	2.678	3982.018	1127.504	3982.018	9.999+	3.532
68	10	S4	0	0	3980.01	1129.308	3980.01	9.999+	3.524
69	10	S5	0	0	3980.05	1129.32	3980.05	9.999+	3.524
70	10	S6	0	2.558	3981.954	1127.555	3981.954	9.999+	3.531
71	10	S7	0	.324	3957.287	1120.608	3957.287	9.999+	3.531
72	10	S8	0	43.951	3849.108	951.043	3849.108	9.999+	4.047
73	11	S1	0	31.957	3805.017	860.702	3805.017	9.999+	4.421
74	11	S2	0	3.275	3917.053	1013.716	3917.053	9.999+	3.864
75	11	S3	0	3.337	3935.661	1020.536	3935.661	9.999+	3.856
76	11	S4	0	0	3934.089	1021.79	3934.089	9.999+	3.85
77	11	S5	0	0	3934.131	1021.795	3934.131	9.999+	3.85
78	11	S6	0	3.224	3935.579	1020.582	3935.579	9.999+	3.856
79	11	S7	0	2.219	3917.305	1013.092	3917.305	9.999+	3.867
80	11	S8	0	30.395	3804.871	861.079	3804.871	9.999+	4.419
81	12	S1	0	32.107	1399.577	1084.377	1399.577	9.999+	1.291
82	12	S2	0	1.344	1354.758	1284.671	1354.758	9.999+	1.055
83	12	S3	0	1.294	1331.469	1289.562	1331.469	9.999+	1.032
84	12	S4	0	0	1333.477	1291.625	1333.477	9.999+	1.032
85	12	S5	0	0	1333.491	1291.639	1333.491	9.999+	1.032
86	12	S6	0	1.332	1331.397	1289.619	1331.397	9.999+	1.032
87	12	S7	0	1.295	1354.998	1284.532	1354.998	9.999+	1.055
88	12	S8	0	32.256	1399.411	1084.552	1399.411	9.999+	1.29
89	13	S1	0	42.191	1473.285	902.694	1473.285	9.999+	1.632
90	13	S2	0	4.044	1450.289	1070.913	1450.289	9.999+	1.354
91	13	S3	0	.685	1424.011	1073.535	1424.011	9.999+	1.326
92	13	S4	0	1.004	1426.13	1075.817	1426.13	9.999+	1.326
93	13	S5	0	.947	1426.144	1075.839	1426.144	9.999+	1.326
94	13	S6	0	.576	1423.929	1073.581	1423.929	9.999+	1.326
95	13	S7	0	3.972	1450.564	1070.788	1450.564	9.999+	1.355
96	13	S8	0	42.412	1473.093	902.87	1473.093	9.999+	1.632
97	14	S1	0	42.422	2437.915	1264.14	2437.915	9.999+	1.929
98	14	S2	0	1.567	2509.272	1497.638	2509.272	9.999+	1.675
99	14	S3	0	1.509	2533.817	1503.339	2533.817	9.999+	1.685
100	14	S4	0	0	2531.814	1505.744	2531.814	9.999+	1.681
101	14	S5	0	0	2531.811	1505.761	2531.811	9.999+	1.681
102	14	S6	0	1.553	2533.868	1503.406	2533.868	9.999+	1.685
103	14	S7	0	1.51	2509.072	1497.476	2509.072	9.999+	1.676
104	14	S8	0	42.725	2438.055	1264.344	2438.055	9.999+	1.928
105	15	S1	0	24.467	2378.993	1144.235	2378.993	9.999+	2.079
106	15	S2	0	1.008	2455.878	1354.261	2455.878	9.999+	1.813

Slab Sliding Safety Factors (Continued)

	LC	Slab	Angle[deg]	Va-xx[lb]	Vr-xx[lb]	Va-zz[lb]	Vr-zz[lb]	SR-xx	SR-zz
107	15	S3	0	2.387	2472.008	1360.715	2472.008	9.999+	1.817
108	15	S4	0	0	2470.586	1362.387	2470.586	9.999+	1.813
109	15	S5	0	0	2470.585	1362.393	2470.585	9.999+	1.813
110	15	S6	0	2.441	2472.035	1360.776	2472.035	9.999+	1.817
111	15	S7	0	1.016	2455.762	1354.123	2455.762	9.999+	1.814
112	15	S8	0	24.651	2379.073	1144.392	2379.073	9.999+	2.079

Envelope Slab Soil Pressures

	Label	UC	LC	Soil Pressure[psf]	Allowable Bearing[psf]	Point
1	S1	.458	6	686.278	1500	N226
2	S2	.484	6	726.605	1500	N233
3	S3	.49	6	734.413	1500	N240
4	S4	.49	6	734.576	1500	N247
5	S5	.49	6	734.589	1500	N254
6	S6	.49	6	734.394	1500	N261
7	S7	.485	6	726.84	1500	N268
8	S8	.457	6	686.162	1500	N275

1.Project information

Customer company:
Customer contact name:
Customer e-mail:
Comment:

Project description:
Location:
Fastening description:

2. Input Data & Anchor Parameters

General
Design method:ACI 318-14
Units: Imperial units

Anchor Information:
Anchor type: Bonded anchor
Material: F1554 Grade 36
Diameter (inch): 0.375
Effective Embedment depth, h_{ef} (inch): 4.000
Code report: ICC-ES ESR-4057
Anchor category: -
Anchor ductility: Yes
h_{min} (inch): 5.25
c_{ac} (inch): 7.12
C_{min} (inch): 1.75
S_{min} (inch): 3.00

Base Material
Concrete: Normal-weight
Concrete thickness, h (inch): 33.00
State: Cracked
Compressive strength, f'_c (psi): 2500
$\Psi_{c,V}$: 1.0
Reinforcement condition: B tension, B shear
Supplemental reinforcement: Not applicable
Reinforcement provided at corners: No
Ignore concrete breakout in tension: No
Ignore concrete breakout in shear: No
Hole condition: Dry concrete
Inspection: Periodic
Temperature range, Short/Long: 150/110°F
Ignore 6do requirement: Not applicable
Build-up grout pad: No

Base Plate
Length x Width x Thickness (inch): 4.75 x 4.75 x 0.31

Recommended Anchor
Anchor Name: SET-3G - SET-3G w/ 3/8"Ø F1554 Gr. 36
Code Report: ICC-ES ESR-4057

Load and Geometry
Load factor source: ACI 318 Section 5.3
Load combination: not set
Seismic design: No
Anchors subjected to sustained tension: No
Apply entire shear load at front row: No
Anchors only resisting wind and/or seismic loads: No

Strength level loads:

N_{ua} [lb]: 3812
V_{uax} [lb]: 77
V_{uay} [lb]: -2647
M_{ux} [ft-lb]: 0
M_{uy} [ft-lb]: 0
M_{uz} [ft-lb]: 0

<Figure 1>

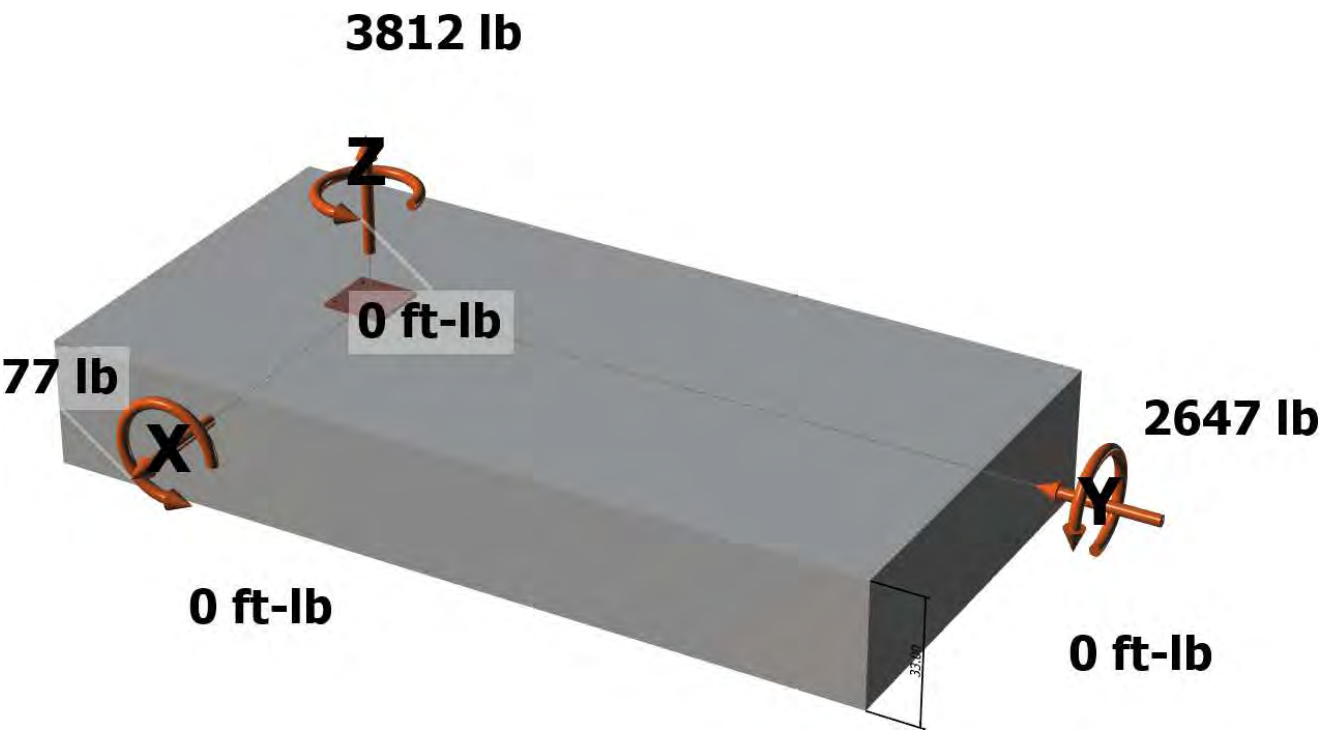

<Figure 2>

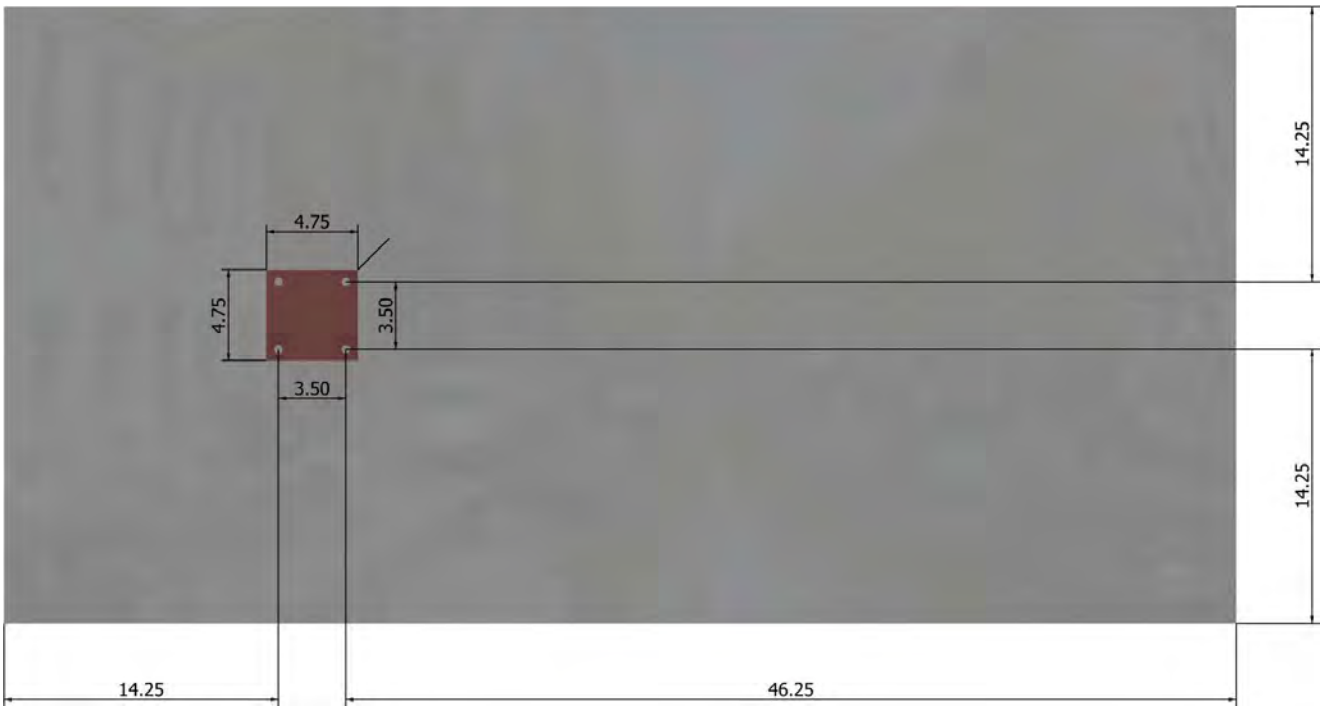

3. Resulting Anchor Forces

Anchor	Tension load, N_{ua} (lb)	Shear load x, V_{uax} (lb)	Shear load y, V_{uay} (lb)	Shear load combined, $\sqrt{(V_{uax})^2+(V_{uay})^2}$ (lb)
1	953.0	19.3	-661.8	662.0
2	953.0	19.3	-661.8	662.0
3	953.0	19.3	-661.8	662.0
4	953.0	19.3	-661.8	662.0
Sum	3812.0	77.0	-2647.0	2648.1

Maximum concrete compression strain (‰): 0.00
Maximum concrete compression stress (psi): 0
Resultant tension force (lb): 3812
Resultant compression force (lb): 0
Eccentricity of resultant tension forces in x-axis, e'_{Nx} (inch): 0.00
Eccentricity of resultant tension forces in y-axis, e'_{Ny} (inch): 0.00
Eccentricity of resultant shear forces in x-axis, e'_{Vx} (inch): 0.00
Eccentricity of resultant shear forces in y-axis, e'_{Vy} (inch): 0.00

<Figure 3>

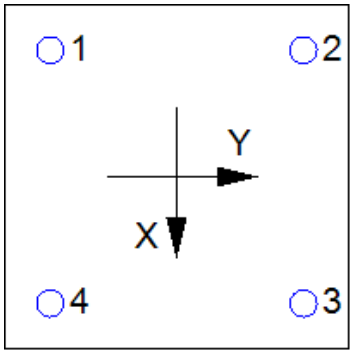

4. Steel Strength of Anchor in Tension (Sec. 17.4.1)

N_{sa} (lb)	ϕ	ϕN_{sa} (lb)
4525	0.75	3394

5. Concrete Breakout Strength of Anchor in Tension (Sec. 17.4.2)

$N_b = k_c \lambda_a \sqrt{f'_c} h_{ef}^{1.5}$ (Eq. 17.4.2.2a)

k_c	λ_a	f'_c (psi)	h_{ef} (in)	N_b (lb)
17.0	1.00	2500	4.000	6800

$\phi N_{cbg} = \phi (A_{Nc} / A_{Nco}) \Psi_{ec,N} \Psi_{ed,N} \Psi_{c,N} \Psi_{cp,N} N_b$ (Sec. 17.3.1 & Eq. 17.4.2.1b)

A_{Nc} (in^2)	A_{Nco} (in^2)	$c_{a,min}$ (in)	$\Psi_{ec,N}$	$\Psi_{ed,N}$	$\Psi_{c,N}$	$\Psi_{cp,N}$	N_b (lb)	ϕ	ϕN_{cbg} (lb)
240.25	144.00	14.25	1.000	1.000	1.00	1.000	6800	0.65	7374

6. Adhesive Strength of Anchor in Tension (Sec. 17.4.5)

$\tau_{k,cr} = \tau_{k,cr} f_{short\text{-}term} K_{sat} (f'_c / 2{,}500)^n$

$\tau_{k,cr}$ (psi)	$f_{short\text{-}term}$	K_{sat}	f'_c (psi)	n	$\tau_{k,cr}$ (psi)
1346	1.00	1.00	2500	0.24	1346

$N_{ba} = \lambda_a \tau_{cr} \pi d_a h_{ef}$ (Eq. 17.4.5.2)

λ_a	τ_{cr} (psi)	d_a (in)	h_{ef} (in)	N_{ba} (lb)
1.00	1346	0.38	4.000	6343

$\phi N_{ag} = \phi (A_{Na} / A_{Na0}) \Psi_{ec,Na} \Psi_{ed,Na} \Psi_{cp,Na} N_{ba}$ (Sec. 17.3.1 & Eq. 17.4.5.1b)

A_{Na} (in^2)	A_{Na0} (in^2)	c_{Na} (in)	$c_{a,min}$ (in)	$\Psi_{ec,Na}$	$\Psi_{ed,Na}$	$\Psi_{cp,Na}$	N_{ba}(lb)	ϕ	ϕN_{ag} (lb)
198.45	112.09	5.29	14.25	1.000	1.000	1.000	6343	0.55	6176

8. Steel Strength of Anchor in Shear (Sec. 17.5.1)

V_{sa} (lb)	ϕ_{grout}	ϕ	$\phi_{grout}\phi V_{sa}$ (lb)
2715	1.0	0.65	1765

9. Concrete Breakout Strength of Anchor in Shear (Sec. 17.5.2)

Shear perpendicular to edge in x-direction:

$V_{bx} = \min|7(l_e / d_a)^{0.2}\sqrt{d_a}\lambda_a\sqrt{f'_c}c_{a1}^{1.5};\ 9\lambda_a\sqrt{f'_c}c_{a1}^{1.5}|$ (Eq. 17.5.2.2a & Eq. 17.5.2.2b)

l_e (in)	d_a (in)	λ_a	f'_c (psi)	c_{a1} (in)	V_{bx} (lb)
3.00	0.375	1.00	2500	17.75	24294

$\phi V_{cbgx} = \phi\,(A_{Vc} / A_{Vco})\Psi_{ec,V}\Psi_{ed,V}\Psi_{c,V}\Psi_{h,V}V_{bx}$ (Sec. 17.3.1 & Eq. 17.5.2.1b)

A_{Vc} (in^2)	A_{Vco} (in^2)	$\Psi_{ec,V}$	$\Psi_{ed,V}$	$\Psi_{c,V}$	$\Psi_{h,V}$	V_{bx} (lb)	ϕ	ϕV_{cbgx} (lb)
1181.48	1417.78	1.000	0.861	1.000	1.000	24294	0.70	12195

Shear perpendicular to edge in y-direction:

$V_{by} = \min|7(l_e / d_a)^{0.2}\sqrt{d_a}\lambda_a\sqrt{f'_c}c_{a1}^{1.5};\ 9\lambda_a\sqrt{f'_c}c_{a1}^{1.5}|$ (Eq. 17.5.2.2a & Eq. 17.5.2.2b)

l_e (in)	d_a (in)	λ_a	f'_c (psi)	c_{a1} (in)	V_{by} (lb)
3.00	0.375	1.00	2500	17.75	24294

$\phi V_{cbgy} = \phi\,(A_{Vc} / A_{Vco})\Psi_{ec,V}\Psi_{ed,V}\Psi_{c,V}\Psi_{h,V}V_{by}$ (Sec. 17.3.1 & Eq. 17.5.2.1b)

A_{Vc} (in^2)	A_{Vco} (in^2)	$\Psi_{ec,V}$	$\Psi_{ed,V}$	$\Psi_{c,V}$	$\Psi_{h,V}$	V_{by} (lb)	ϕ	ϕV_{cbgy} (lb)
852.00	1417.78	1.000	0.861	1.000	1.000	24294	0.70	8794

Shear parallel to edge in x-direction:

$V_{by} = \min|7(l_e / d_a)^{0.2}\sqrt{d_a}\lambda_a\sqrt{f'_c}c_{a1}^{1.5};\ 9\lambda_a\sqrt{f'_c}c_{a1}^{1.5}|$ (Eq. 17.5.2.2a & Eq. 17.5.2.2b)

l_e (in)	d_a (in)	λ_a	f'_c (psi)	c_{a1} (in)	V_{by} (lb)
3.00	0.375	1.00	2500	14.25	17475

$\phi V_{cbgx} = \phi\,(2)(A_{Vc} / A_{Vco})\Psi_{ec,V}\Psi_{ed,V}\Psi_{c,V}\Psi_{h,V}V_{by}$ (Sec. 17.3.1, 17.5.2.1(c) & Eq. 17.5.2.1b)

A_{Vc} (in^2)	A_{Vco} (in^2)	$\Psi_{ec,V}$	$\Psi_{ed,V}$	$\Psi_{c,V}$	$\Psi_{h,V}$	V_{by} (lb)	ϕ	ϕV_{cbgx} (lb)
684.00	913.78	1.000	1.000	1.000	1.000	17475	0.70	18313

Shear parallel to edge in y-direction:

$V_{bx} = \min|7(l_e / d_a)^{0.2}\sqrt{d_a}\lambda_a\sqrt{f'_c}c_{a1}^{1.5};\ 9\lambda_a\sqrt{f'_c}c_{a1}^{1.5}|$ (Eq. 17.5.2.2a & Eq. 17.5.2.2b)

l_e (in)	d_a (in)	λ_a	f'_c (psi)	c_{a1} (in)	V_{bx} (lb)
3.00	0.375	1.00	2500	14.25	17475

$\phi V_{cbgy} = \phi\,(2)(A_{Vc} / A_{Vco})\Psi_{ec,V}\Psi_{ed,V}\Psi_{c,V}\Psi_{h,V}V_{bx}$ (Sec. 17.3.1, 17.5.2.1(c) & Eq. 17.5.2.1b)

A_{Vc} (in^2)	A_{Vco} (in^2)	$\Psi_{ec,V}$	$\Psi_{ed,V}$	$\Psi_{c,V}$	$\Psi_{h,V}$	V_{bx} (lb)	ϕ	ϕV_{cbgy} (lb)
836.30	913.78	1.000	1.000	1.000	1.000	17475	0.70	22391

10. Concrete Pryout Strength of Anchor in Shear (Sec. 17.5.3)

$\phi V_{cpg} = \phi \min|k_{cp}N_{ag}\ ;\ k_{cp}N_{cbg}| = \phi \min|k_{cp}(A_{Na} / A_{Na0})\Psi_{ec,Na}\Psi_{ed,Na}\Psi_{cp,Na}N_{ba}\ ;\ k_{cp}(A_{Nc} / A_{Nco})\Psi_{ec,N}\Psi_{ed,N}\Psi_{c,N}\Psi_{cp,N}N_b|$ (Sec. 17.3.1 & Eq. 17.5.3.1b)

k_{cp}	A_{Na} (in^2)	A_{Na0} (in^2)	$\Psi_{ed,Na}$	$\Psi_{ec,Na}$	$\Psi_{cp,Na}$	N_{ba} (lb)	N_a (lb)
2.0	198.45	112.09	1.000	1.000	1.000	6343	11230

A_{Nc} (in^2)	A_{Nco} (in^2)	$\Psi_{ec,N}$	$\Psi_{ed,N}$	$\Psi_{c,N}$	$\Psi_{cp,N}$	N_b (lb)	N_{cb} (lb)	ϕ
240.25	144.00	1.000	1.000	1.000	1.000	6800	11345	0.70

ϕV_{cpg} (lb)
15722

11. Results

Interaction of Tensile and Shear Forces (Sec. R17.6)

Tension	Factored Load, N_{ua} (lb)	Design Strength, ϕN_n (lb)	Ratio	Status
Steel	953	3394	0.28	Pass
Concrete breakout	3812	7374	0.52	Pass
Adhesive	**3812**	**6176**	**0.62**	**Pass (Governs)**

Shear	Factored Load, V_{ua} (lb)	Design Strength, ϕV_n (lb)	Ratio	Status
Steel	**662**	**1765**	**0.38**	**Pass (Governs)**
T Concrete breakout x+	77	12195	0.01	Pass
T Concrete breakout y-	2647	8794	0.30	Pass
|| Concrete breakout y-	39	18313	0.00	Pass
|| Concrete breakout x-	1324	22391	0.06	Pass
Concrete breakout, combined	-	-	0.30	Pass
Pryout	2648	15722	0.17	Pass

Interaction check	$(N_{ua}/\phi N_{ua})^{5/3}$	$(V_{ua}/\phi V_{ua})^{5/3}$	Combined Ratio	Permissible	Status
Sec. R17.6	0.45	0.20	64.3%	1.0	Pass

SET-3G w/ 3/8"Ø F1554 Gr. 36 with hef = 4.000 inch meets the selected design criteria.

12. Warnings

- Designer must exercise own judgement to determine if this design is suitable.

- Refer to manufacturer's product literature for hole cleaning and installation instructions.

Racking Analysis

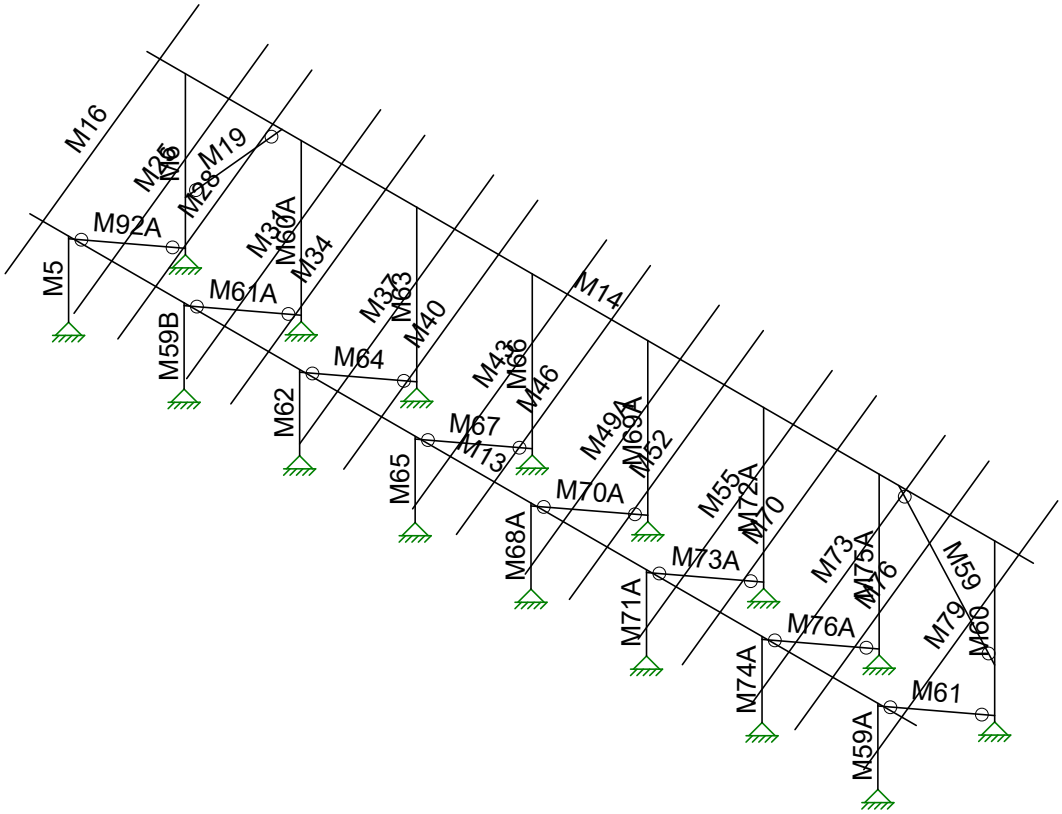

Vector Structural Engineeri...		SK - 3
STB	Ground Mount	Feb 17, 2021 at 10:22 AM
U2716-0281-211		Sunmodo Sunturf A10.r3d

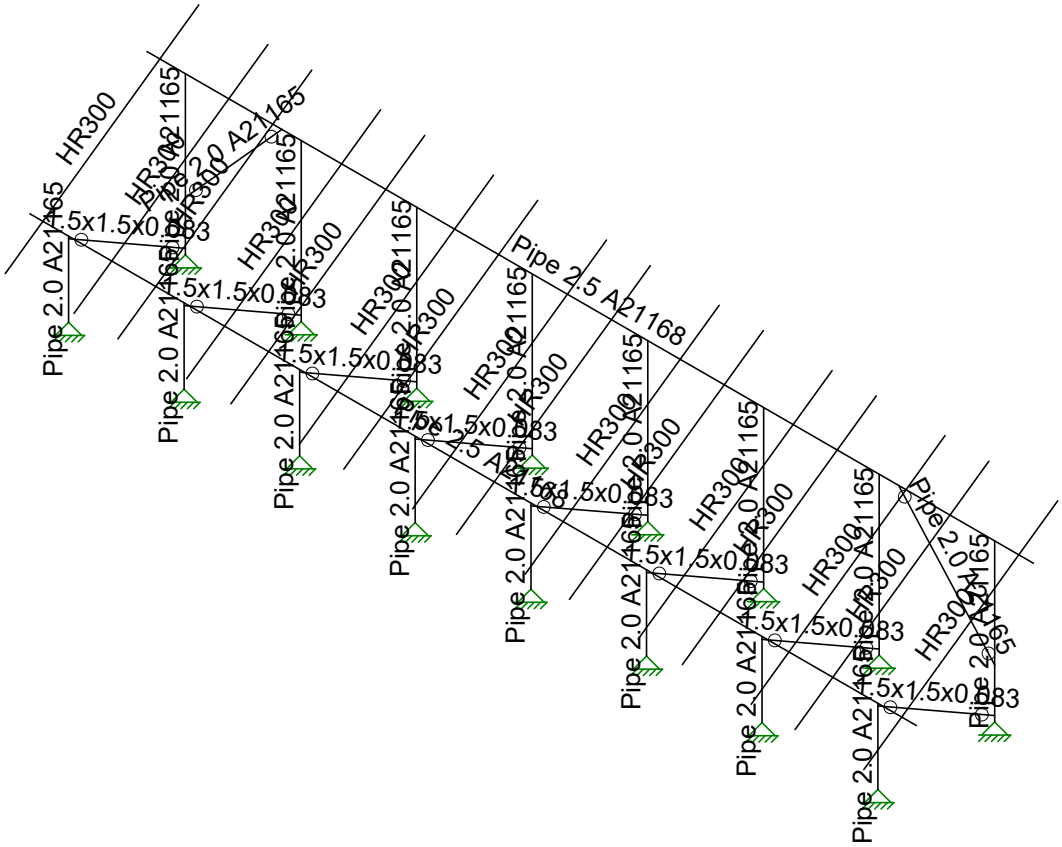

Vector Structural Engineeri...		SK - 4
STB	Ground Mount	Feb 17, 2021 at 10:22 AM
U2716-0281-211		Sunmodo Sunturf A10.r3d

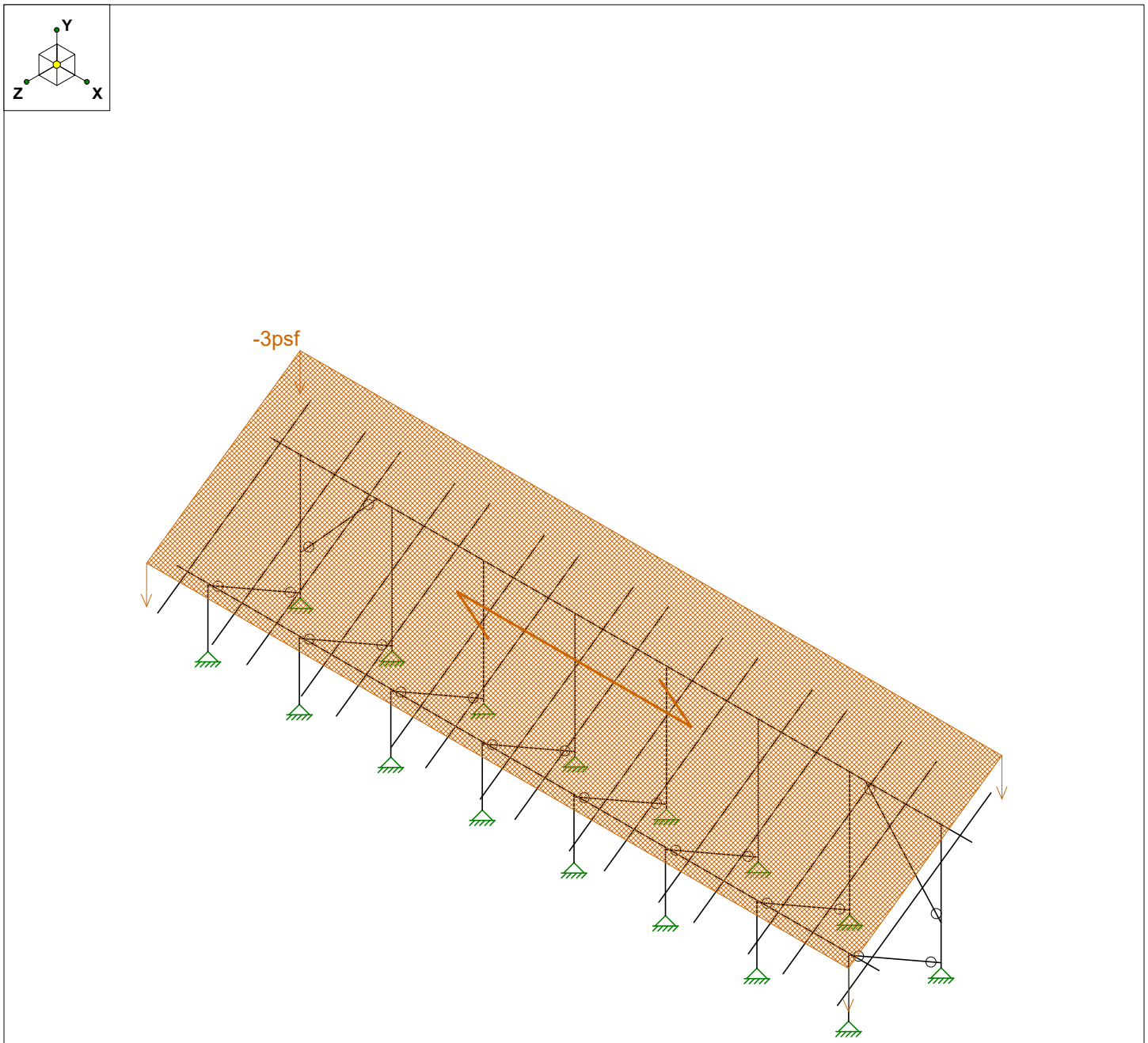

Loads: BLC 2, Solar Panel Weight

Vector Structural Engineeri...	Ground Mount	SK - 6
STB		Feb 17, 2021 at 10:23 AM
U2716-0281-211		Sunmodo Sunturf A10.r3d

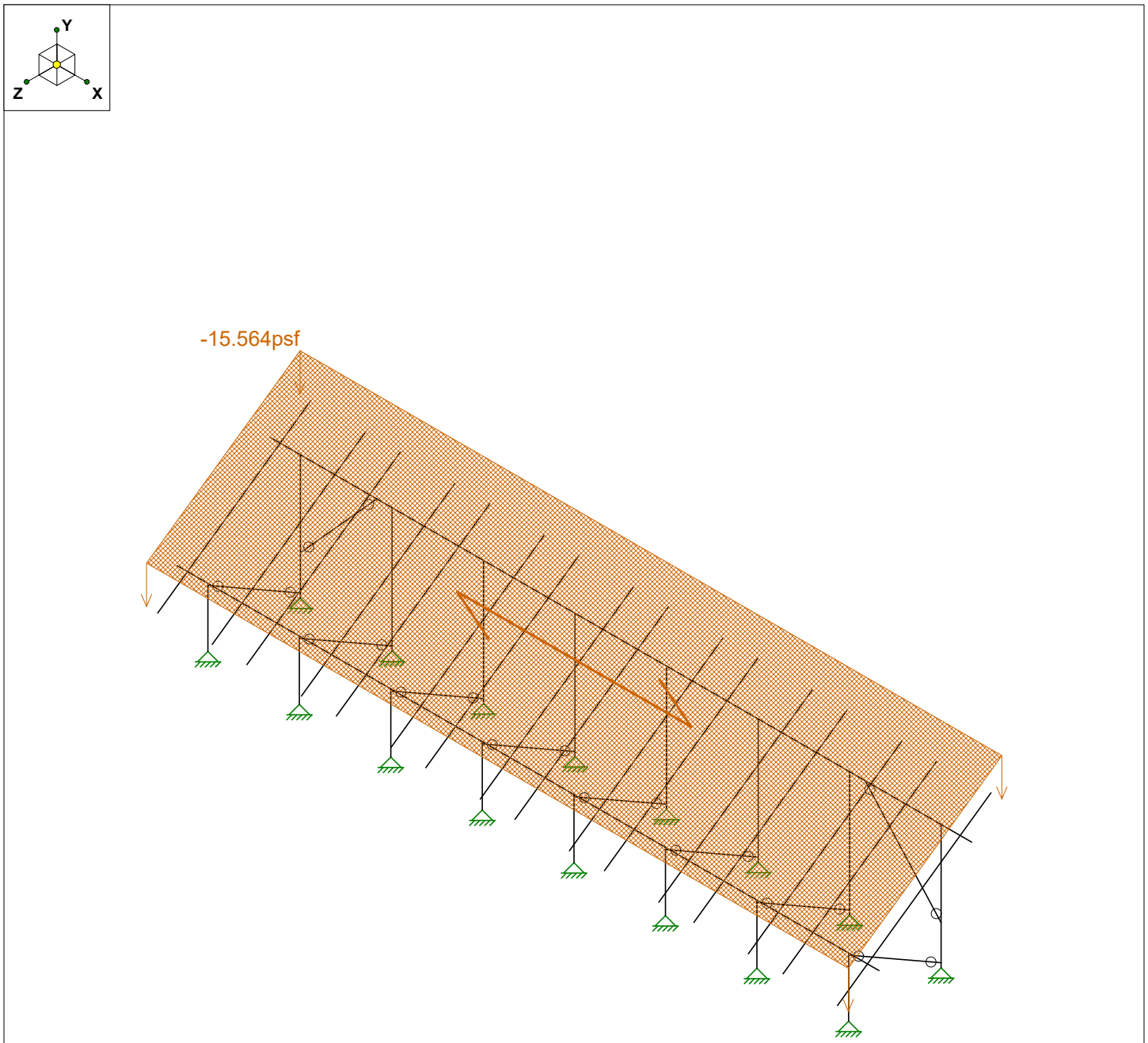

Loads: BLC 3, Roof Live/Snow

Vector Structural Engineeri...		SK - 7
STB	Ground Mount	Feb 17, 2021 at 10:23 AM
U2716-0281-211		Sunmodo Sunturf A10.r3d

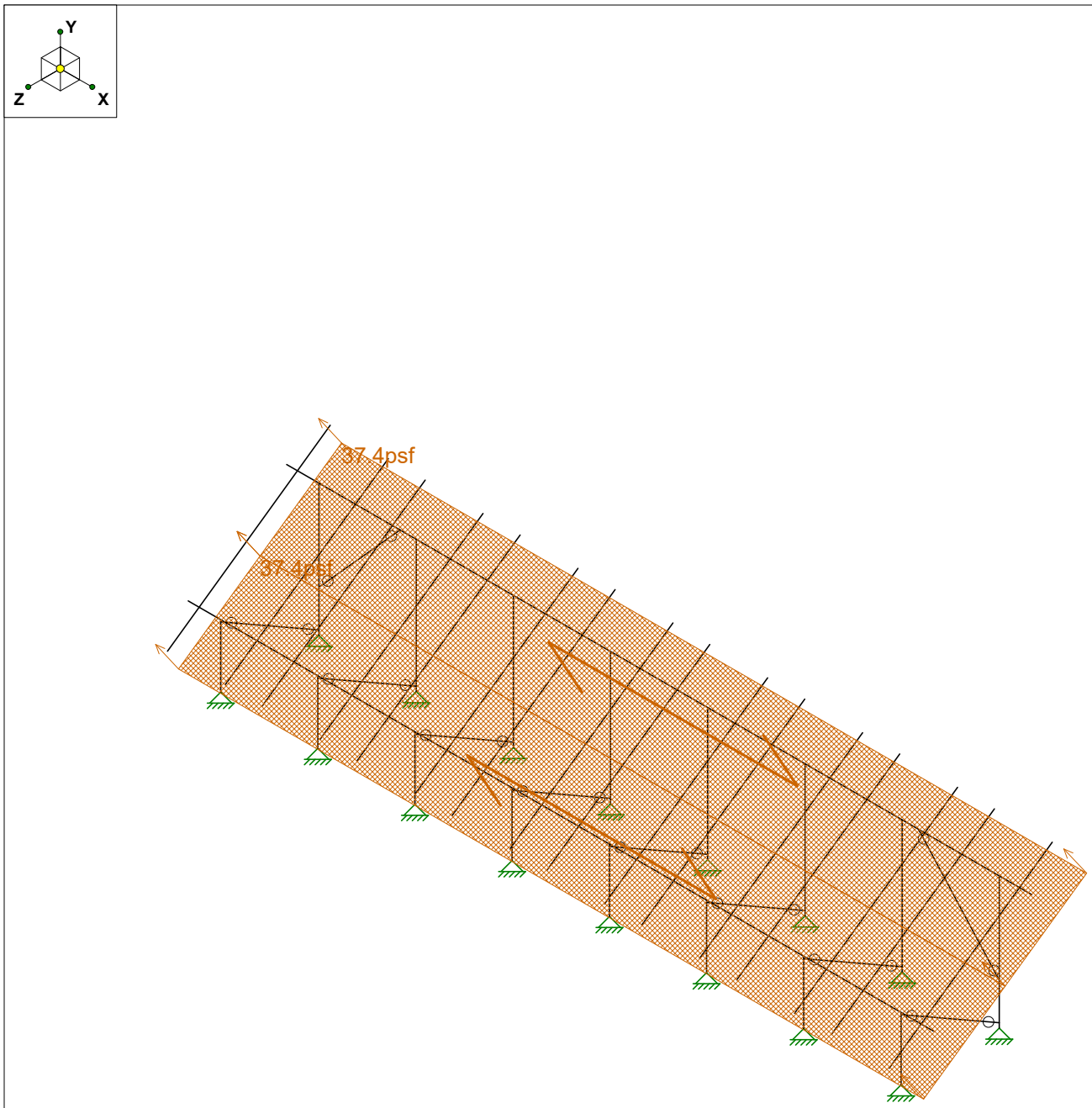

Loads: BLC 4, Wind 1

Vector Structural Engineeri...		SK - 8
STB	Ground Mount	Feb 17, 2021 at 10:23 AM
U2716-0281-211		Sunmodo Sunturf A10.r3d

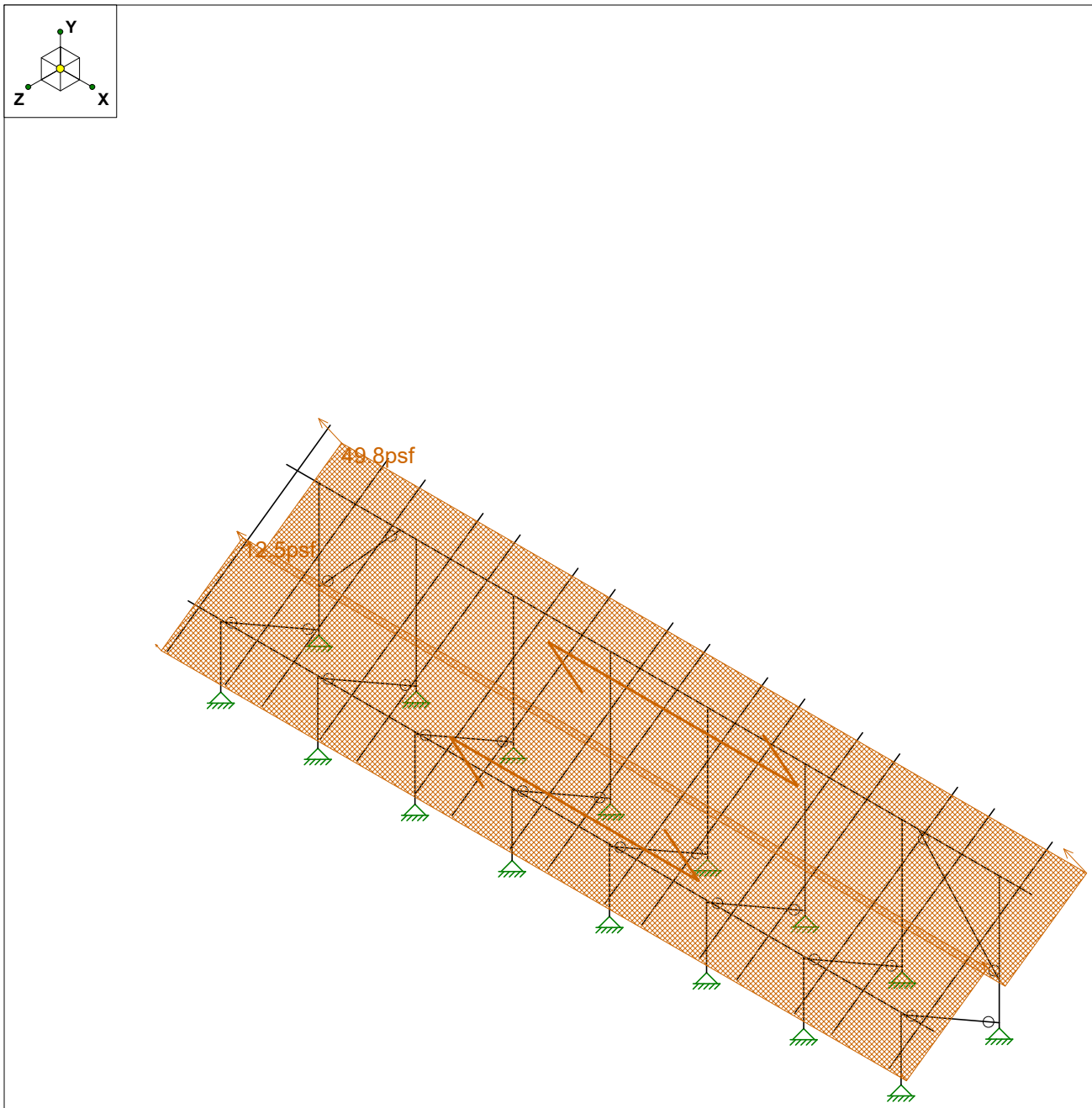

Loads: BLC 5, Wind 2

Vector Structural Engineeri...		SK - 9
STB	Ground Mount	Feb 17, 2021 at 10:24 AM
U2716-0281-211		Sunmodo Sunturf A10.r3d

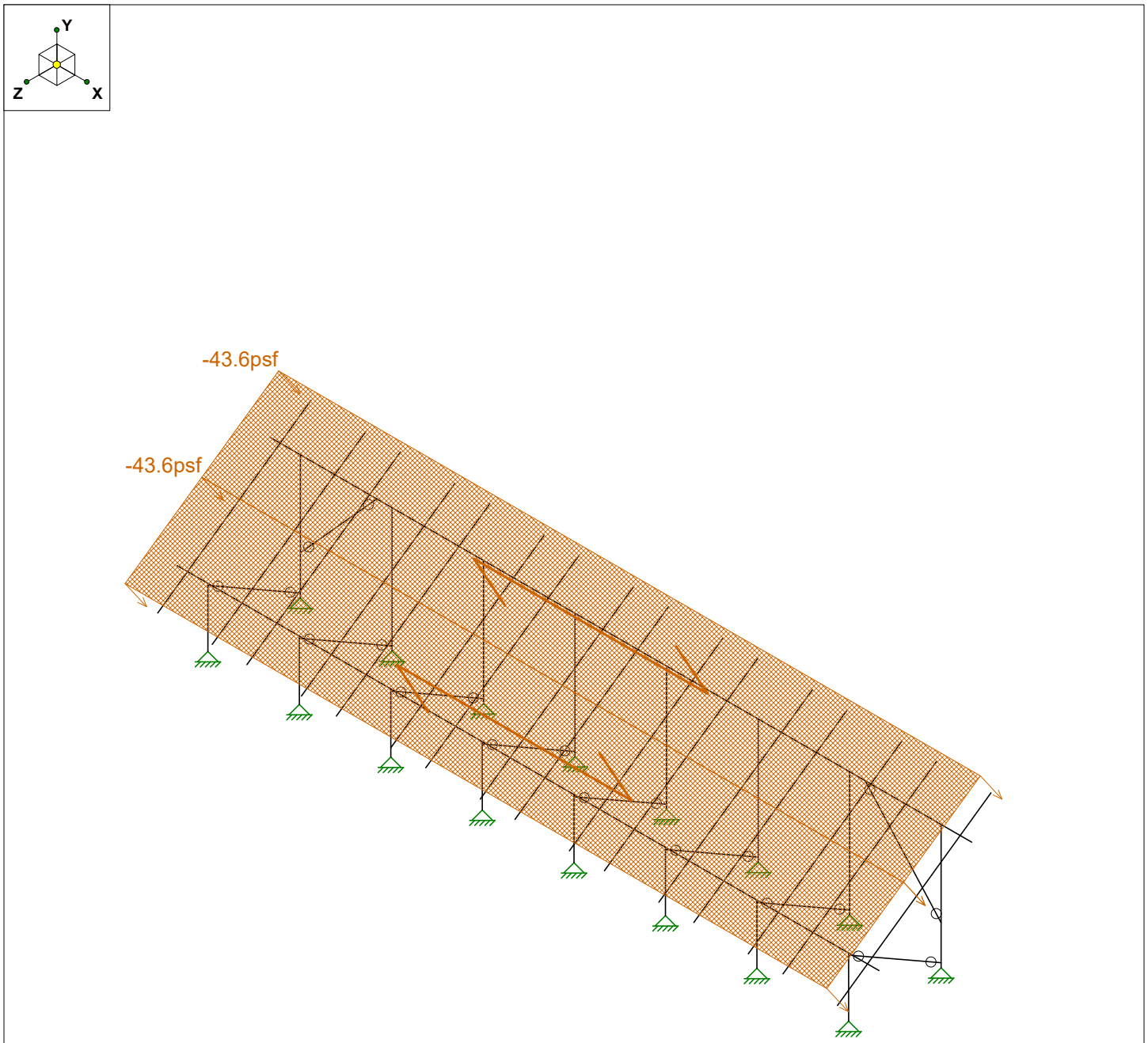

Loads: BLC 6, Wind 3

Vector Structural Engineeri...		SK - 10
STB	Ground Mount	Feb 17, 2021 at 10:24 AM
U2716-0281-211		Sunmodo Sunturf A10.r3d

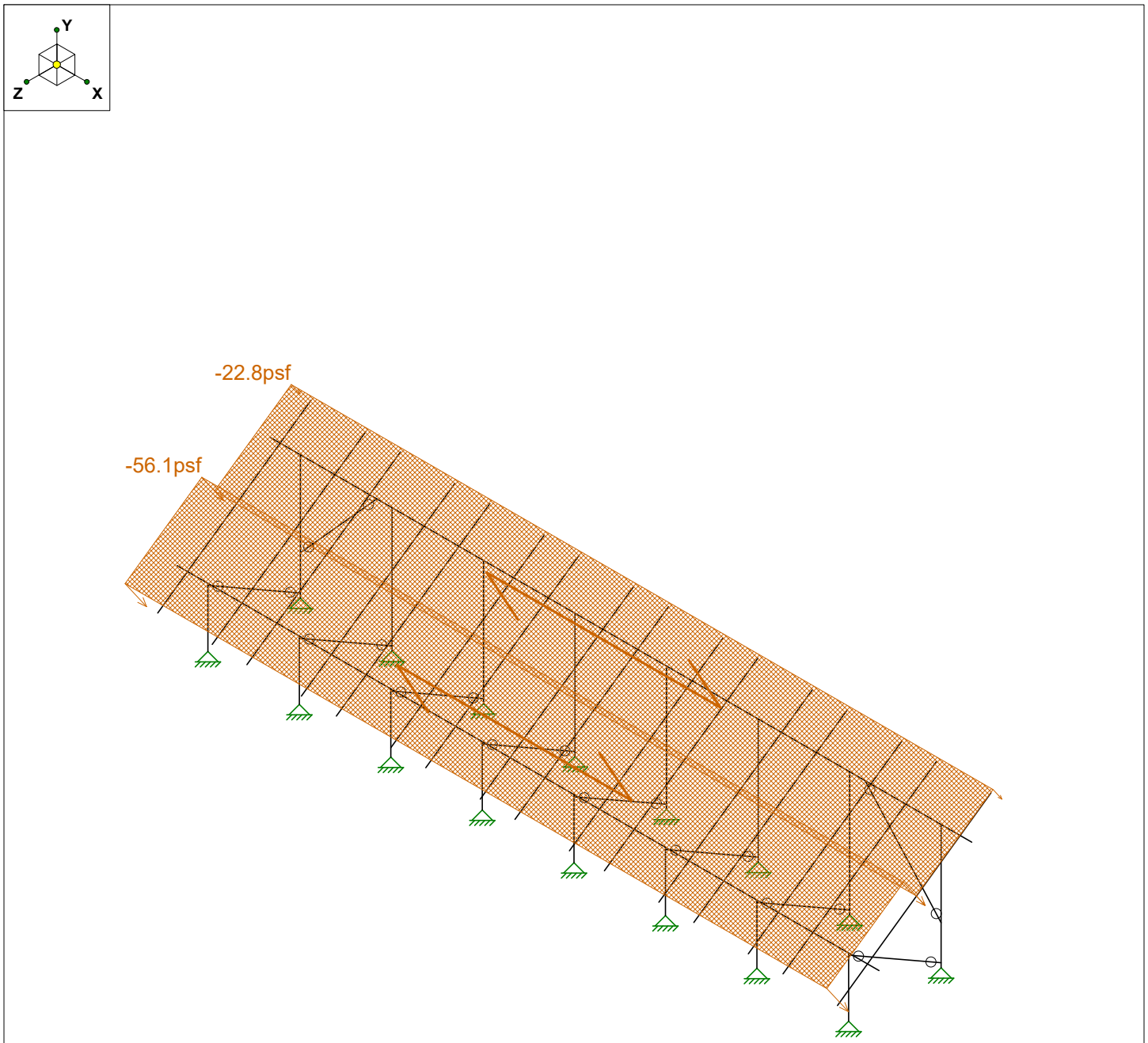

Loads: BLC 7, Wind 4

Vector Structural Engineeri...		SK - 11
STB	Ground Mount	Feb 17, 2021 at 10:24 AM
U2716-0281-211		Sunmodo Sunturf A10.r3d

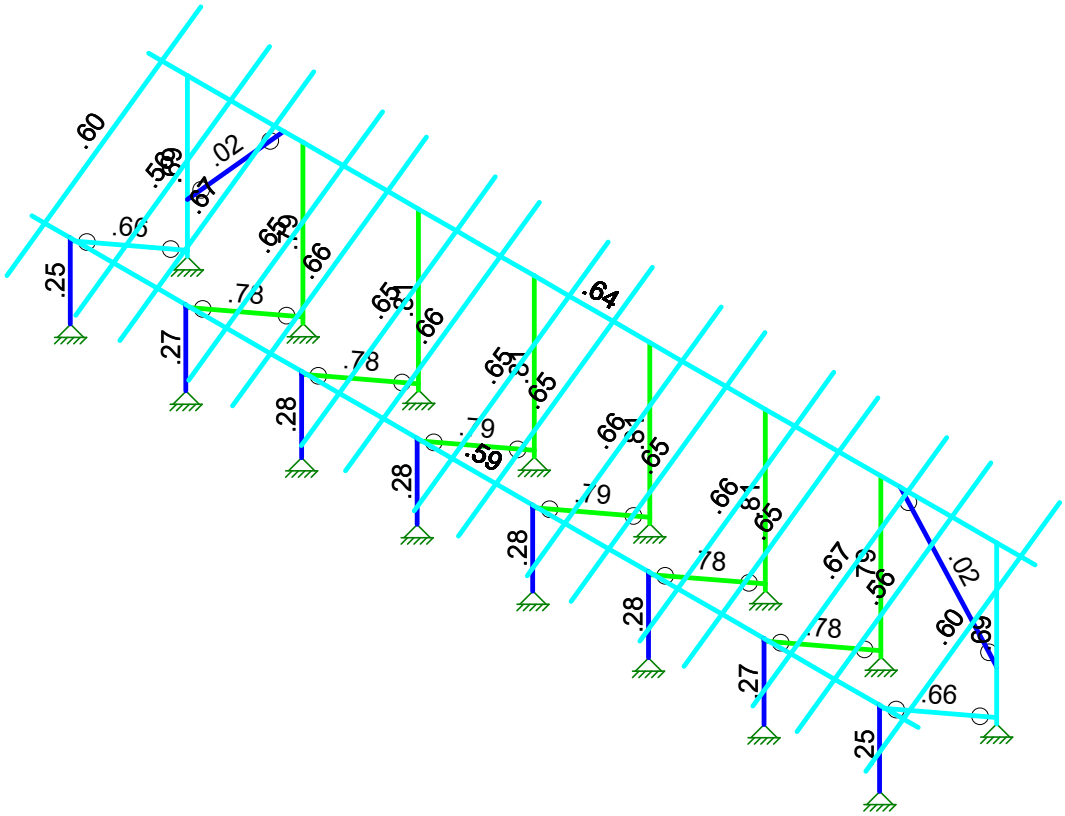

Member Code Checks Displayed (Enveloped)
Envelope Only Solution

Vector Structural Engineeri...		SK - 1
STB	Ground Mount	Feb 17, 2021 at 10:21 AM
U2716-0281-211		Sunmodo Sunturf A10.r3d

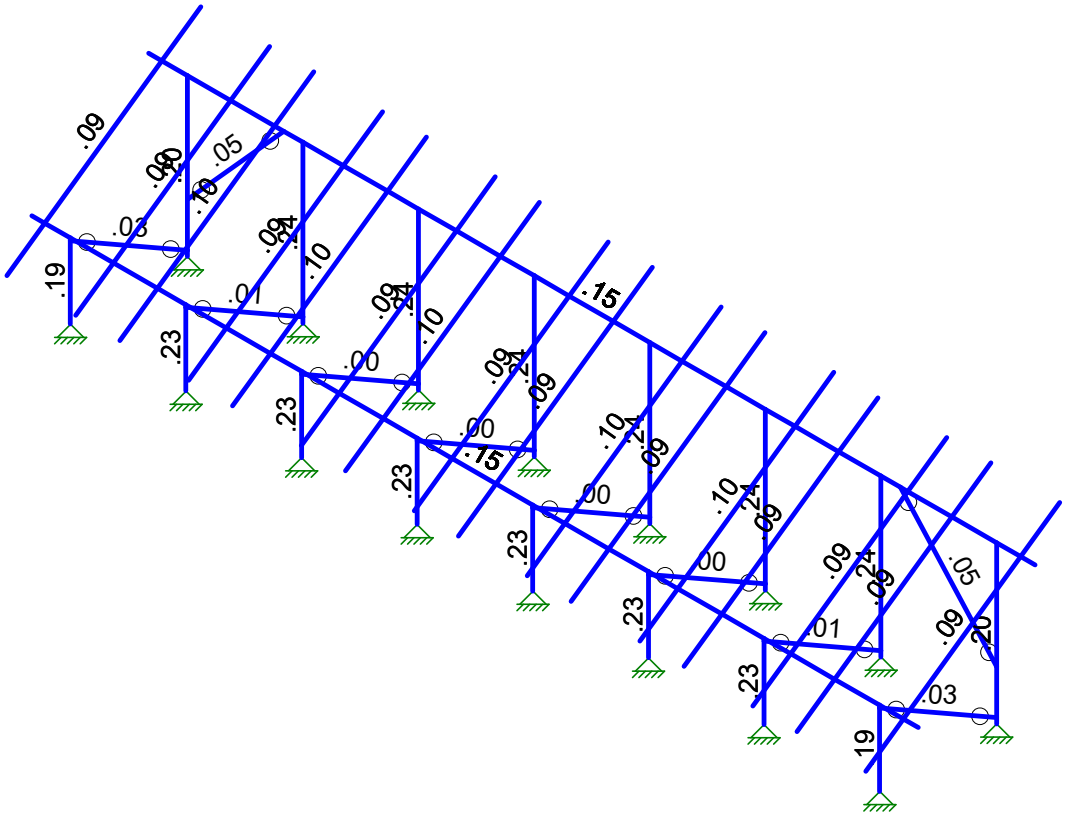

Member Shear Checks Displayed (Enveloped)
Envelope Only Solution

Vector Structural Engineeri...		SK - 2
STB	Ground Mount	Feb 17, 2021 at 10:22 AM
U2716-0281-211		Sunmodo Sunturf A10.r3d

(Global) Model Settings

Display Sections for Member Calcs	5
Max Internal Sections for Member Calcs	97
Include Shear Deformation?	Yes
Increase Nailing Capacity for Wind?	Yes
Include Warping?	Yes
Trans Load Btwn Intersecting Wood Wall?	Yes
Area Load Mesh (in^2)	144
Merge Tolerance (in)	.12
P-Delta Analysis Tolerance	0.50%
Include P-Delta for Walls?	Yes
Automatically Iterate Stiffness for Walls?	Yes
Max Iterations for Wall Stiffness	3
Gravity Acceleration (in/sec^2)	386.4
Wall Mesh Size (in)	24
Eigensolution Convergence Tol. (1.E-)	4
Vertical Axis	Y
Global Member Orientation Plane	XZ
Static Solver	Sparse Accelerated
Dynamic Solver	Accelerated Solver

Hot Rolled Steel Code	AISC 15th(360-16): ASD
Adjust Stiffness?	Yes(Iterative)
RISAConnection Code	AISC 15th(360-16): ASD
Cold Formed Steel Code	AISI S100-16: ASD
Wood Code	AWC NDS-15: ASD
Wood Temperature	< 100F
Concrete Code	ACI 318-14
Masonry Code	None
Aluminum Code	AA ADM1-15: ASD - Building
Stainless Steel Code	AISC 14th(360-10): ASD
Adjust Stiffness?	Yes(Iterative)

Number of Shear Regions	4
Region Spacing Increment (in)	4
Biaxial Column Method	Exact Integration
Parme Beta Factor (PCA)	.65
Concrete Stress Block	Rectangular
Use Cracked Sections?	Yes
Use Cracked Sections Slab?	No
Bad Framing Warnings?	No
Unused Force Warnings?	Yes
Min 1 Bar Diam. Spacing?	No
Concrete Rebar Set	REBAR_SET_ASTMA615
Min % Steel for Column	1
Max % Steel for Column	8

(Global) Model Settings, Continued

Seismic Code	ASCE 7-16
Seismic Base Elevation (in)	15600
Add Base Weight?	Yes
Ct X	.02
Ct Z	.02
T X (sec)	Not Entered
T Z (sec)	Not Entered
R X	3
R Z	3
Ct Exp. X	.75
Ct Exp. Z	.75
SD1	1
SDS	1
S1	1
TL (sec)	5
Risk Cat	I or II
Drift Cat	Other
Om Z	1
Om X	1
Cd Z	4
Cd X	4
Rho Z	1
Rho X	1

Hot Rolled Steel Properties

	Label	E [ksi]	G [ksi]	Nu	Therm (/1E5 F)	Density[k/ft^3]	Yield[psi]	Ry	Fu[psi]	Rt
1	A992	29000	11154	.3	.65	.49	50000	1.1	65000	1.1
2	A36 Gr.36	29000	11154	.3	.65	.49	36000	1.5	58000	1.2
3	A572 Gr.50	29000	11154	.3	.65	.49	50000	1.1	65000	1.1
4	A500 Gr.B R...	29000	11154	.3	.65	.527	42000	1.4	58000	1.3
5	A500 Gr.B Re...	29000	11154	.3	.65	.527	46000	1.4	58000	1.3
6	A53 Gr.B	29000	11154	.3	.65	.49	35000	1.6	60000	1.2
7	A1085	29000	11154	.3	.65	.49	50000	1.4	65000	1.3

Aluminum Properties

	Label	E [ksi]	G [ksi]	Nu	Therm (...	Density[...	Table B.4	kt	Ftu[psi]	Fty[psi]	Fcy[psi]	Fsu[psi]	Ct
1	3003-H14	10100	3787.5	.33	1.3	.173	Table B.4-1	1	19000	16000	13000	12000	141
2	6061-T6	10100	3787.5	.33	1.3	.173	Table B.4-2	1	38000	35000	35000	24000	141
3	6063-T5	10100	3787.5	.33	1.3	.173	Table B.4-2	1	22000	16000	16000	13000	141
4	6063-T6	10100	3787.5	.33	1.3	.173	Table B.4-2	1	30000	25000	25000	19000	141
5	5052-H34	10200	3787.5	.33	1.3	.173	Table B.4-1	1	34000	26000	24000	20000	141
6	6061-T6 W	10100	3787.5	.33	1.3	.173	Table B.4-1	1	24000	15000	15000	15000	141
7	6005-T5	10100	3787.5	.33	1.3	.173	Table B.4-1	1	38000	35000	35000	24000	141

Hot Rolled Steel Section Sets

	Label	Shape	Type	Design List	Material	Design R...	A [in2]	Iyy [in4]	Izz [in4]	J [in4]
1	Post	Pipe 2.0 A21165	Column	Pipe	A572 Gr.50	Typical	.776	.499	.499	.998
2	Cross Beam	Pipe 2.5 A21168	Beam	Wide Flange	A572 Gr.50	Typical	.947	.907	.907	1.814
3	Diagonal Brace	1.5x1.5x0.083	HBrace	SquareTube	A572 Gr.50	Typical	.47	.158	.158	.236

Aluminum Section Sets

	Label	Shape	Type	Design List	Material	Design R...	A [in2]	Iyy [in4]	Izz [in4]	J [in4]
1	AL Posts	2.375ODX0.188	Column	Pipe	6005-T5	Typical	1.29	.778	.778	1.54
2	AL Brace	RT1.5x2x0.15625	VBrace	Rectangular Tubes	6005-T5	Typical	.996	.327	.524	.602
3	AL Rails	HR300	Beam	Rectangular Tubes	6005-T5	Typical	.74	.253	.727	.578
4	AL Cross Beam	Cross Rail	Beam	Rectangular Tubes	6005-T5	Typical	1.909	1.97	4.366	4.017

Member Area Loads (BLC 2 : Solar Panel Weight)

	Joint A	Joint B	Joint C	Joint D	Direction	Distribution	Magnitude[psf]
1	N197	N200	N199	N196	Y	A-B	-3

Member Area Loads (BLC 3 : Roof Live/Snow)

	Joint A	Joint B	Joint C	Joint D	Direction	Distribution	Magnitude[psf]
1	N197	N200	N199	N196	PY	A-B	-19

Member Area Loads (BLC 4 : Wind 1)

	Joint A	Joint B	Joint C	Joint D	Direction	Distribution	Magnitude[psf]
1	N197	N119B	N120B	N200	Perp	B-C	37.4
2	N119B	N196	N199	N120B	Perp	B-C	37.4

Member Area Loads (BLC 5 : Wind 2)

	Joint A	Joint B	Joint C	Joint D	Direction	Distribution	Magnitude[psf]
1	N197	N119B	N120B	N200	Perp	B-C	49.8
2	N119B	N196	N199	N120B	Perp	B-C	12.5

Member Area Loads (BLC 6 : Wind 3)

	Joint A	Joint B	Joint C	Joint D	Direction	Distribution	Magnitude[psf]
1	N197	N119B	N120B	N200	Perp	B-C	-43.6
2	N119B	N196	N199	N120B	Perp	B-C	-43.6

Member Area Loads (BLC 7 : Wind 4)

	Joint A	Joint B	Joint C	Joint D	Direction	Distribution	Magnitude[psf]
1	N197	N119B	N120B	N200	Perp	B-C	-22.8
2	N119B	N196	N199	N120B	Perp	B-C	-56.1

Basic Load Cases

	BLC Description	Category	X Gravity	Y Gravity	Z Gravity	Joint	Point	Distributed	Area(M...	Surface...
1	Self Weight	DL		-1.05						
2	Solar Panel Weight	DL							1	
3	Roof Live/Snow	RLL							1	
4	Wind 1	OL1							2	
5	Wind 2	OL2							2	
6	Wind 3	OL3							2	
7	Wind 4	OL4							2	
8	BLC 2 Transient Area ...	None						40		
9	BLC 3 Transient Area ...	None						40		
10	BLC 4 Transient Area ...	None						192		
11	BLC 5 Transient Area ...	None						192		
12	BLC 6 Transient Area ...	None						192		
13	BLC 7 Transient Area ...	None						192		

Load Combinations

	Description	S...	PD...	SRSS	BLC	Fa...	BLC	Fa...	BLC	Fa...	B...	Fa...	B...	Fa...	B...	Fa...	B...	Fa...	B...	Fa...	B...	Fa...	B...	Fa...
1	ASD Loads		Y																					
2	1.0 D	Yes	Y		DL	1																		
3	1.0 D + 1.0 S	Yes	Y		DL	1	RLL	1																
4	1.0 D + 0.6 W1	Yes	Y		DL	1	RLL		OL1	.6														
5	1.0 D + 0.6 W2	Yes	Y		DL	1	RLL		OL2	.6														
6	1.0 D + 0.6 W3	Yes	Y		DL	1	RLL		OL3	.6														
7	1.0 D + 0.6 W4	Yes	Y		DL	1	RLL		OL4	.6														
8	1.0 D + 0.45 W1 + 0....	Yes	Y		DL	1	RLL	.75	OL1	.45														
9	1.0 D + 0.45 W2 + 0....	Yes	Y		DL	1	RLL	.75	OL2	.45														
10	1.0 D + 0.45 W3 + 0....	Yes	Y		DL	1	RLL	.75	OL3	.45														
11	1.0 D + 0.45 W4 + 0....	Yes	Y		DL	1	RLL	.75	OL4	.45														
12	0.6 D + 0.6 W1	Yes	Y		DL	.6	RLL		OL1	.6														
13	0.6 D + 0.6 W2	Yes	Y		DL	.6	RLL		OL2	.6														
14	0.6 D + 0.6 W3	Yes	Y		DL	.6	RLL		OL3	.6														
15	0.6 D + 0.6 W4	Yes	Y		DL	.6	RLL		OL4	.6														
16			Y																					
17	LRFD Loads		Y																					
18	1.4 D		Y		DL	1.4	RLL																	
19	1.2 D + 1.6 S + 0.5 W1		Y		DL	1.2	RLL	1.6	OL1	.5														
20	1.2 D + 1.6 S + 0.5 W2		Y		DL	1.2	RLL	1.6	OL2	.5														
21	1.2 D + 1.6 S + 0.5 W3		Y		DL	1.2	RLL	1.6	OL3	.5														
22	1.2 D + 1.6 S + 0.5 W4		Y		DL	1.2	RLL	1.6	OL4	.5														
23	1.2 D + 1.0 W1		Y		DL	1.2	RLL		OL1	1														
24	1.2 D + 1.0 W2		Y		DL	1.2	RLL		OL2	1														
25	1.2 D + 1.0 W3		Y		DL	1.2	RLL		OL3	1														
26	1.2 D + 1.0 W4		Y		DL	1.2	RLL		OL4	1														
27	0.9 D + 1.0 W1		Y		DL	.9	RLL		OL1	1														
28	0.9 D + 1.0 W2		Y		DL	.9	RLL		OL2	1														
29	0.9 D + 1.0 W3		Y		DL	.9	RLL		OL3	1														
30	0.9 D + 1.0 W4		Y		DL	.9	RLL		OL4	1														

Envelope Joint Reactions

	Joint		X [lb]	LC	Y [lb]	LC	Z [lb]	LC	MX [lb-ft]	LC	MY [lb...	LC	MZ [lb-ft]	LC
1	N2	max	1.17	6	1200.705	9	63.038	4	0	15	0	15	0	15
2		min	-3.299	13	-247.417	14	-72.451	6	0	2	0	2	0	2
3	N1	max	38.462	10	2418.823	6	1335.6...	6	0	15	0	15	0	15
4		min	-42.672	13	-1946.21	13	-1147....	12	0	2	0	2	0	2
5	N123	max	42.972	13	2418.121	6	1335.9...	6	0	15	0	15	0	15
6		min	-39.055	10	-1947.111	13	-1147....	12	0	2	0	2	0	2
7	N124	max	4.785	9	1203.637	9	63.044	4	0	15	0	15	0	15
8		min	-.696	14	-246.692	14	-72.461	6	0	2	0	2	0	2
9	N123A	max	1.533	13	2751.77	6	1579.9...	6	0	15	0	15	0	15
10		min	-2.142	6	-2192.311	13	-1353....	4	0	2	0	2	0	2
11	N124A	max	2.895	14	1462.335	9	68.923	4	0	15	0	15	0	15
12		min	-7.703	9	-320.67	14	-79.587	6	0	2	0	2	0	2
13	N129	max	1.519	13	2806.917	6	1582.9...	6	0	15	0	15	0	15
14		min	-1.617	10	-2276.077	13	-1361....	4	0	2	0	2	0	2
15	N130	max	.148	14	1448.981	9	70.809	4	0	15	0	15	0	15
16		min	-3.595	9	-305.12	14	-81.516	6	0	2	0	2	0	2
17	N135	max	.4	13	2809.805	6	1587.9...	6	0	15	0	15	0	15
18		min	-.502	6	-2272.714	13	-1362....	4	0	2	0	2	0	2
19	N136	max	.322	14	1453.373	9	71.311	4	0	15	0	15	0	15
20		min	-1.505	9	-313.49	14	-82.02	6	0	2	0	2	0	2
21	N141	max	.539	10	2809.887	6	1587.8...	6	0	15	0	15	0	15

Envelope Joint Reactions (Continued)

	Joint		X [lb]	LC	Y [lb]	LC	Z [lb]	LC	MX [lb-ft]	LC	MY [lb...	LC	MZ [lb-ft]	LC
22		min	-.486	13	-2272.667	13	-1362....	4	0	2	0	2	0	2
23	N142	max	1.119	9	1453.172	9	71.312	4	0	15	0	15	0	15
24		min	-.297	14	-313.546	14	-82.021	6	0	2	0	2	0	2
25	N147B	max	1.613	10	2806.832	6	1583.1...	6	0	15	0	15	0	15
26		min	-1.619	13	-2276.607	13	-1361....	4	0	2	0	2	0	2
27	N148A	max	3.412	9	1450.505	9	70.81	4	0	15	0	15	0	15
28		min	-.093	14	-305.036	14	-81.519	6	0	2	0	2	0	2
29	N153A	max	2.306	10	2753.161	6	1579.5...	6	0	15	0	15	0	15
30		min	-1.554	13	-2189.851	13	-1353....	4	0	2	0	2	0	2
31	N154A	max	6.378	9	1451.953	9	68.915	4	0	15	0	15	0	15
32		min	-2.987	14	-321.664	14	-79.577	6	0	2	0	2	0	2
33	Totals:	max	0	10	24695.643	10	11541....	14						
34		min	0	13	-12127.493	12	-9900....	12						

Envelope AISC 15th(360-16): ASD Steel Code Checks

	Member	Shape	Code Check	Loc[in]	LC	Shear ...	Loc[in]	Dir	LC	Pnc/om [...	Pnt/om [lb]	Mnyy/om...	Mnzz/om...	Cb	Eqn
1	M5	Pipe 2.0 A2...	.247	52.516	6	.195	52.516		6	16635.531	23232.186	1397.505	1397.505	3....	H1-1b
2	M6	Pipe 2.0 A2...	.688	3.56	6	.205	0		6	5780.675	23232.186	1397.505	1397.505	1....	H1-1a
3	M13	Pipe 2.5 A2...	.590	449....	11	.152	107....		6	14032.946	28358.413	2081.747	2081.747	1	H1-1b
4	M14	Pipe 2.5 A2...	.637	194....	10	.146	550....		10	14032.946	28358.413	2081.747	2081.747	1	H1-1b
5	M19	Pipe 2.0 A2...	.021	53.532	10	.049	0		6	6821.523	23232.186	1397.505	1397.505	1....	H1-1b
6	M92A	1.5x1.5x0.083	.663	50.973	6	.026	0	y	6	2479.016	14085.15	624.421	624.421	1....	H1-1a
7	M59	Pipe 2.0 A2...	.020	53.446	10	.049	0		6	6843.259	23232.186	1397.505	1397.505	1....	H1-1b
8	M59A	Pipe 2.0 A2...	.247	52.516	6	.195	52.516		6	16635.531	23232.186	1397.505	1397.505	3....	H1-1b
9	M60	Pipe 2.0 A2...	.688	3.56	6	.205	0		6	5780.675	23232.186	1397.505	1397.505	1....	H1-1a
10	M61	1.5x1.5x0.083	.663	50.973	6	.026	97.868	y	6	2479.016	14085.15	624.421	624.421	1....	H1-1a
11	M59B	Pipe 2.0 A2...	.272	52.516	6	.227	52.516		6	16635.531	23232.186	1397.505	1397.505	1....	H1-1b
12	M60A	Pipe 2.0 A2...	.794	3.56	6	.242	0		6	5780.675	23232.186	1397.505	1397.505	1....	H1-1a
13	M61A	1.5x1.5x0.083	.783	50.973	6	.006	97.868	y	5	2479.016	14085.15	624.421	624.421	1....	H1-1a
14	M62	Pipe 2.0 A2...	.278	52.516	6	.227	52.516		6	16635.531	23232.186	1397.505	1397.505	4....	H1-1b
15	M63	Pipe 2.0 A2...	.805	3.56	6	.243	0		6	5780.675	23232.186	1397.505	1397.505	1....	H1-1a
16	M64	1.5x1.5x0.083	.784	50.973	6	.004	97.868	y	9	2479.016	14085.15	624.421	624.421	1....	H1-1a
17	M65	Pipe 2.0 A2...	.280	52.516	6	.227	52.516		6	16635.531	23232.186	1397.505	1397.505	1....	H1-1b
18	M66	Pipe 2.0 A2...	.807	3.56	6	.244	0		6	5780.675	23232.186	1397.505	1397.505	1....	H1-1a
19	M67	1.5x1.5x0.083	.786	50.973	6	.002	0	y	9	2479.016	14085.15	624.421	624.421	1....	H1-1a
20	M68A	Pipe 2.0 A2...	.280	52.516	6	.227	52.516		6	16635.531	23232.186	1397.505	1397.505	1....	H1-1b
21	M69A	Pipe 2.0 A2...	.807	3.56	6	.244	0		6	5780.675	23232.186	1397.505	1397.505	1....	H1-1a
22	M70A	1.5x1.5x0.083	.786	50.973	6	.002	97.868	y	9	2479.016	14085.15	624.421	624.421	1....	H1-1a
23	M71A	Pipe 2.0 A2...	.278	52.516	6	.227	52.516		6	16635.531	23232.186	1397.505	1397.505	1....	H1-1b
24	M72A	Pipe 2.0 A2...	.805	3.56	6	.243	0		6	5780.675	23232.186	1397.505	1397.505	1....	H1-1a
25	M73A	1.5x1.5x0.083	.784	50.973	6	.004	97.868	y	9	2479.016	14085.15	624.421	624.421	1....	H1-1a
26	M74A	Pipe 2.0 A2...	.272	52.516	6	.227	52.516		6	16635.531	23232.186	1397.505	1397.505	1....	H1-1b
27	M75A	Pipe 2.0 A2...	.794	3.56	6	.242	0		6	5780.675	23232.186	1397.505	1397.505	1....	H1-1a
28	M76A	1.5x1.5x0.083	.783	50.973	6	.006	0	y	5	2479.016	14085.15	624.421	624.421	1....	H1-1a

Envelope AA ADM1-15: ASD - Building Aluminum Code Checks

	Member	Shape	Code C...	Loc[in]	LC	Shear ...	Loc[in]	Dir	LC	Pnc/O...	Pnt/Om...	Mny/O...	Mnz/O...	Vny/O...	Vnz/O...	Cb	Eqn
1	M16	HR300	.597	87.792	10	.088	35.833	y	11	3465.417	14429....	560.361	934.132	5656.689	2605.145	1....	H.1-1
2	M25	HR300	.564	87.792	10	.088	35.833	y	11	3465.417	14429....	560.361	934.132	5656.689	2605.145	1....	H.1-1
3	M28	HR300	.665	87.792	10	.095	35.833	y	11	3465.417	14429....	560.361	934.132	5656.689	2605.145	1....	H.1-1
4	M31	HR300	.646	87.792	10	.094	35.833	y	11	3465.417	14429....	560.361	934.132	5656.689	2605.145	1....	H.1-1
5	M34	HR300	.662	87.792	10	.096	35.833	y	11	3465.417	14429....	560.361	934.132	5656.689	2605.145	1....	H.1-1
6	M37	HR300	.651	87.792	10	.095	35.833	y	11	3465.417	14429....	560.361	934.132	5656.689	2605.145	1....	H.1-1
7	M40	HR300	.659	87.792	10	.095	35.833	y	11	3465.417	14429....	560.361	934.132	5656.689	2605.145	1....	H.1-1

Envelope AA ADM1-15: ASD - Building Aluminum Code Checks (Continued)

	Member	Shape	Code C...	Loc[in]	LC	Shear ...	Loc[in]	Dir	LC	Pnc/O...	Pnt/Om...	Mny/O...	Mnz/O...	Vny/O...	Vnz/O...	Cb	Eqn
8	M43	HR300	.655	87.792	10	.095	35.833	y	11	3465.417	14429....	560.361	934.132	5656.689	2605.145	1....	H.1-1
9	M46	HR300	.655	87.792	10	.095	35.833	y	11	3465.417	14429....	560.361	934.132	5656.689	2605.145	1....	H.1-1
10	M49A	HR300	.659	87.792	10	.095	35.833	y	11	3465.417	14429....	560.361	934.132	5656.689	2605.145	1....	H.1-1
11	M52	HR300	.651	87.792	10	.095	35.833	y	11	3465.417	14429....	560.361	934.132	5656.689	2605.145	1....	H.1-1
12	M55	HR300	.662	87.792	10	.096	35.833	y	11	3465.417	14429....	560.361	934.132	5656.689	2605.145	1....	H.1-1
13	M70	HR300	.646	87.792	10	.094	35.833	y	11	3465.417	14429....	560.361	934.132	5656.689	2605.145	1....	H.1-1
14	M73	HR300	.666	87.792	10	.094	35.833	y	11	3465.417	14429....	560.361	934.132	5656.689	2605.145	1....	H.1-1
15	M76	HR300	.564	87.792	10	.087	35.833	y	11	3465.417	14429....	560.361	934.132	5656.689	2605.145	1....	H.1-1
16	M79	HR300	.597	87.792	10	.091	35.833	y	11	3465.417	14429....	560.361	934.132	5656.689	2605.145	1....	H.1-1