Project Number: U2716-0276-211

March 30, 2021

Sunmodo
14800 NE 65th Street
Vancouver, WA 98682

REFERENCE: Sunmodo Sunturf Ground Mount A9 (85x45)
Ground Mount PV Array Installation

To Whom It May Concern:

Per request of Sunmodo, we have been asked to prepare the structural design of a ground-mounted PV solar array system with several foundation options as shown in the attached calculations. The adopted building code in this jurisdiction is the 2020 Florida Building Code, Building (2018 IBC). Vector Structural Engineering requires that we review each site specific install, and we are not liable for installs at site specific locations we have not reviewed. The following design parameters are used in our analysis:

- Minimum Design Loads for Buildings and Other Structures (ASCE 7-16)
- Design wind speed for risk category I structures: 140 mph
- Wind exposure: C
- Ground snow load: 70 psf
- The ground screws and helical piers must be tested to 1.5 times uplift and 2.0 times lateral reactions found in the table below. A minimum of one ground screw or helical pier must be tested.

Load (ASD)	Value (lbs)	Factor of Safety	Test Value (lbs)
UPLIFT	2790	1.5	4185
LATERAL	1783	2	3566

Foundation concrete shall have a minimum compressive strength of 2500 psi at 28 days. Cement for all concrete shall be Type I or II with a minimum of 6% entrained air with a water/cement ratio of 0.50. Maximum aggregate size shall be 3/4". No special inspection of concrete strength is required.

Footings are designed based on an allowable soil bearing pressure of 1500 psf an allowable skin friction of 250 psf, an allowable lateral bearing pressure of 150 pcf, and a coefficient of friction of 0.3. Vector Structural Engineering strongly recommends independent soils testing be performed by a licensed geotechnical engineer to verify the assumed soil parameters.

All ground mounts are to be installed per manufacturer's recommendations. The use of solar panel support span tables provided by the manufacturer is allowed only where the site conditions and solar panel configuration match the description of the span tables. Electrical engineering is beyond our scope. All work performed must be in accordance with accepted industry-wide methods and applicable safety standards. Vector Structural Engineering assumes no responsibility for improper installation of the solar panels.

Very truly yours,

VECTOR STRUCTURAL ENGINEERING, LLC
FL Firm License: COA 26626

JACOB S. PROCTOR
LICENSE
No 74277
STATE OF
FLORIDA
PROFESSIONAL ENGINEER

Jacob Proctor, P.E.
FL License: 74277
Project Engineer

Enclosures

JSP/stb

03/30/2021

VECTOR ENGINEERS
651 W GALENA PARK BLVD. #101 (801) 990-1775
DRAPER, UTAH 84020 (801) 990-1776 FAX

JOB NO. U2716-0276-211
PROJECT SUNMODO SUNTURF GROUND MOUNTS A9
SUBJECT ALL OPTIONS

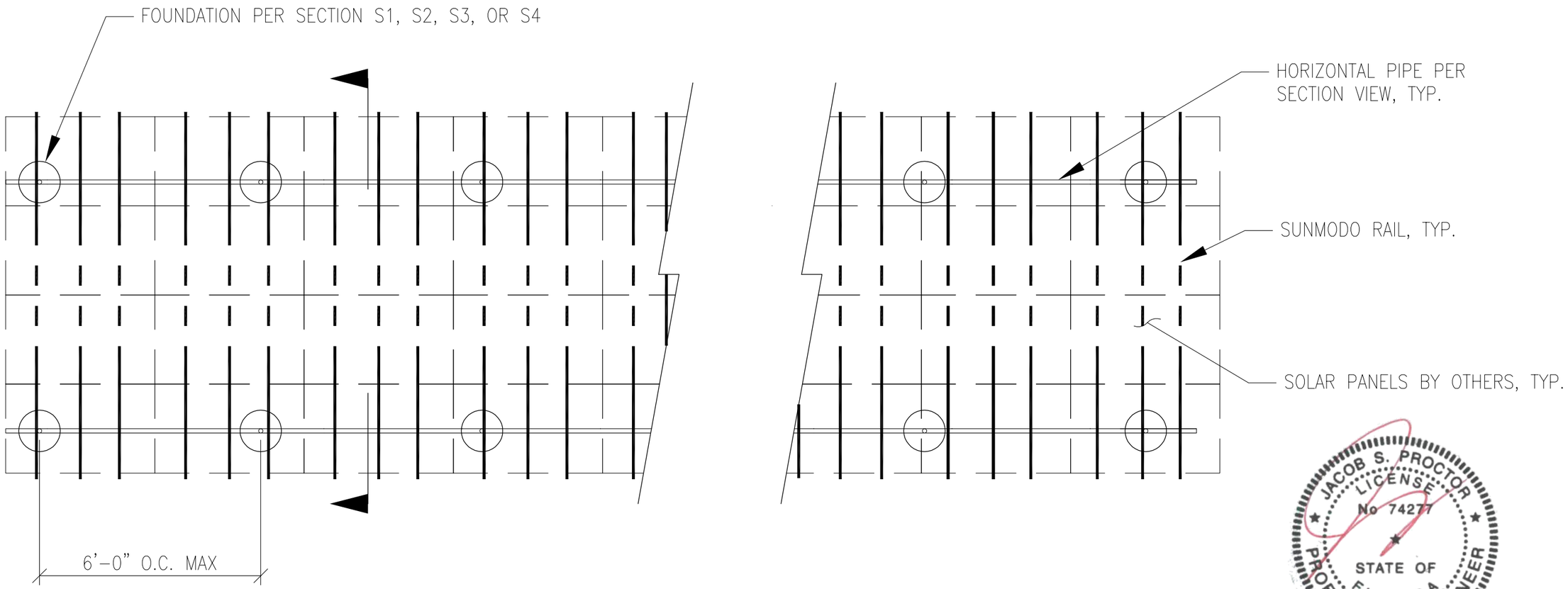

JACOB S. PROCTOR LICENSE No 74277 STATE OF FLORIDA PROFESSIONAL ENGINEER

PV ARRAY PLAN

N.T.S.

P1

03/30/2021

Vector Engineers requires that we review each site specific install and is not liable for installs at site specific locations we have not reviewed.

VECTOR ENGINEERS

JOB NO. U2716-0276-211

PROJECT SUNMODO SUNTURF GROUND MOUNTS A9

SUBJECT DRILLED PIER OPTION

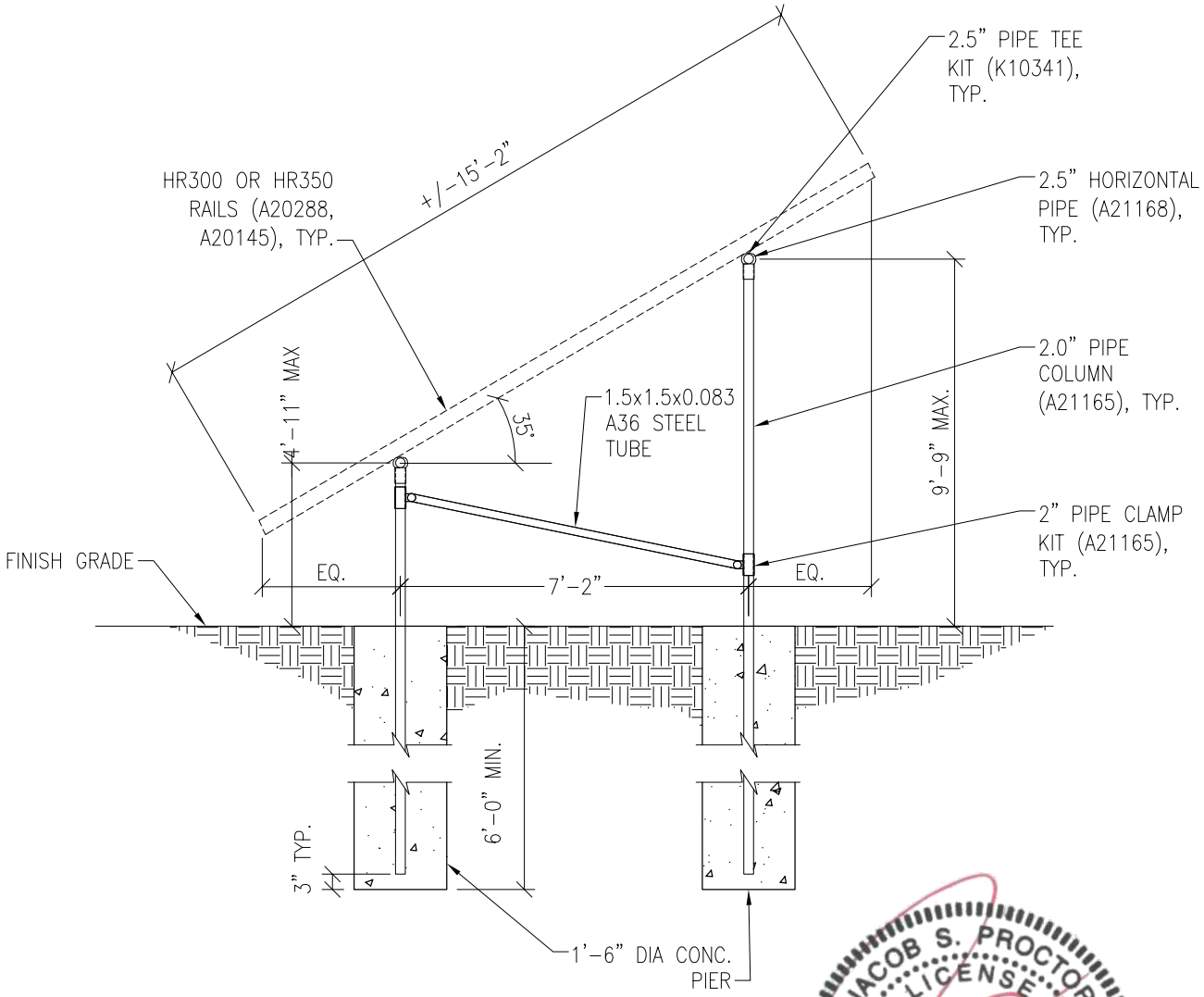

JACOB S. PROCTOR LICENSE No 74277 STATE OF FLORIDA PROFESSIONAL ENGINEER

Vector Engineers requires that we review each site specific install and is not liable for installs at site specific locations we have not reviewed.

PV ARRAY SECTION

N.T.S.

S1

03/30/2021

651 W Galena Park Blvd. #101
Draper, Utah 84020
(801) 990-1775
(801) 990-1776 FAX
www.vectorse.com

VECTOR ENGINEERS

JOB NO. U2716-0276-211

PROJECT SUNMODO SUNTURF GROUND MOUNTS A9

SUBJECT HELICAL PIER OPTION

NOTES:

1. For ground mount components see Section S1.
2. A minimum of (1) helical pier must be load-tested as follows:
   - 2.1. Safety factor for uplift = 1.5,
   - 2.2. Safety factor for lateral loads = 2.0
   - 2.3. Upward deflection limit = 1/2"
   - 2.4. Lateral deflection limit = 1"
   - 2.5. The load tests must be performed by an approved contractor.

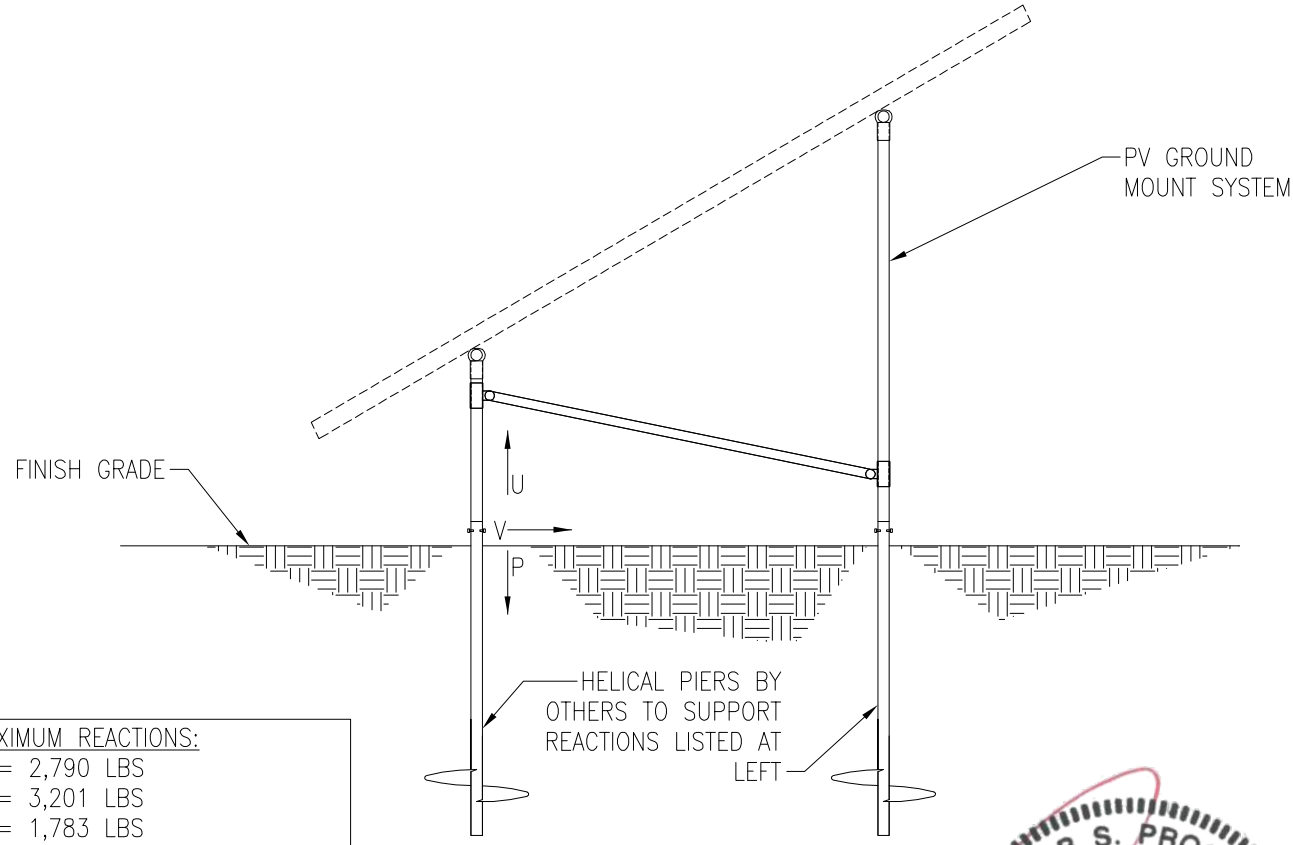

MAXIMUM REACTIONS:
U = 2,790 LBS
P = 3,201 LBS
V = 1,783 LBS

JACOB S. PROCTOR LICENSE No 74277 STATE OF FLORIDA PROFESSIONAL ENGINEER

Vector Engineers requires that we review each site specific install and is not liable for installs at site specific locations we have not reviewed.

PV ARRAY SECTION

N.T.S.

S2

651 W Galena Park Blvd. #101
Draper, Utah 84020
(801) 990-1775
(801) 990-1776 FAX
www.vectorse.com

03/30/2021

VECTOR ENGINEERS

JOB NO. U2716-0276-211

PROJECT SUNMODO SUNTURF GROUND MOUNTS A9

SUBJECT GROUND SCREW OPTION

NOTES:

1. For ground mount components see Section S1.
2. A minimum of (1) ground screw must be load-tested as follows:
   - 2.1. Safety factor for uplift = 1.5,
   - 2.2. Safety factor for lateral loads = 2.0
   - 2.3. Upward deflection limit = 1/2"
   - 2.4. Lateral deflection limit = 1"
   - 2.5. The load tests must be performed by an approved contractor.

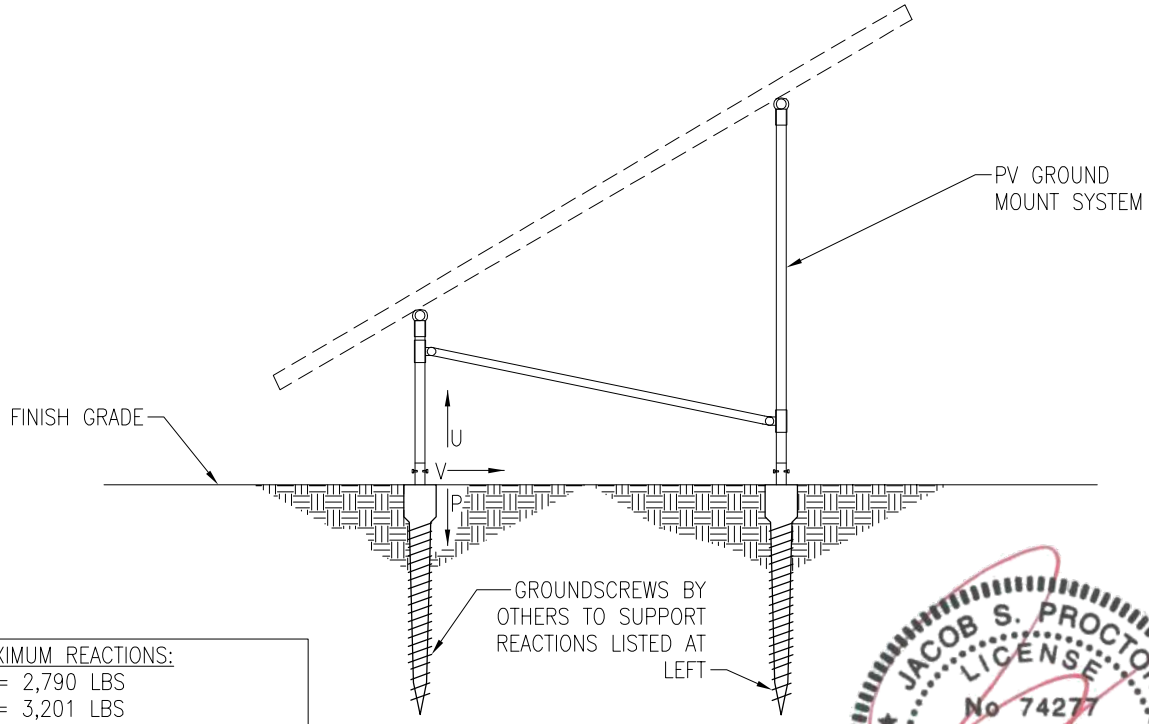

MAXIMUM REACTIONS:
U = 2,790 LBS
P = 3,201 LBS
V = 1,783 LBS

JACOB S. PROCTOR LICENSE No 74277 STATE OF FLORIDA PROFESSIONAL ENGINEER

Vector Engineers requires that we review each site specific install and is not liable for installs at site specific locations we have not reviewed.

PV ARRAY SECTION

N.T.S.

S3

03/30/2021

651 W Galena Park Blvd. #101
Draper, Utah 84020
(801) 990-1775
(801) 990-1776 FAX
www.vectorse.com

VECTOR ENGINEERS

JOB NO. U2716-0276-211

PROJECT SUNMODO SUNTURF GROUND MOUNTS A9

SUBJECT BALLASTED BLOCK OPTION

NOTES:

1. For ground mount components see Section S1.

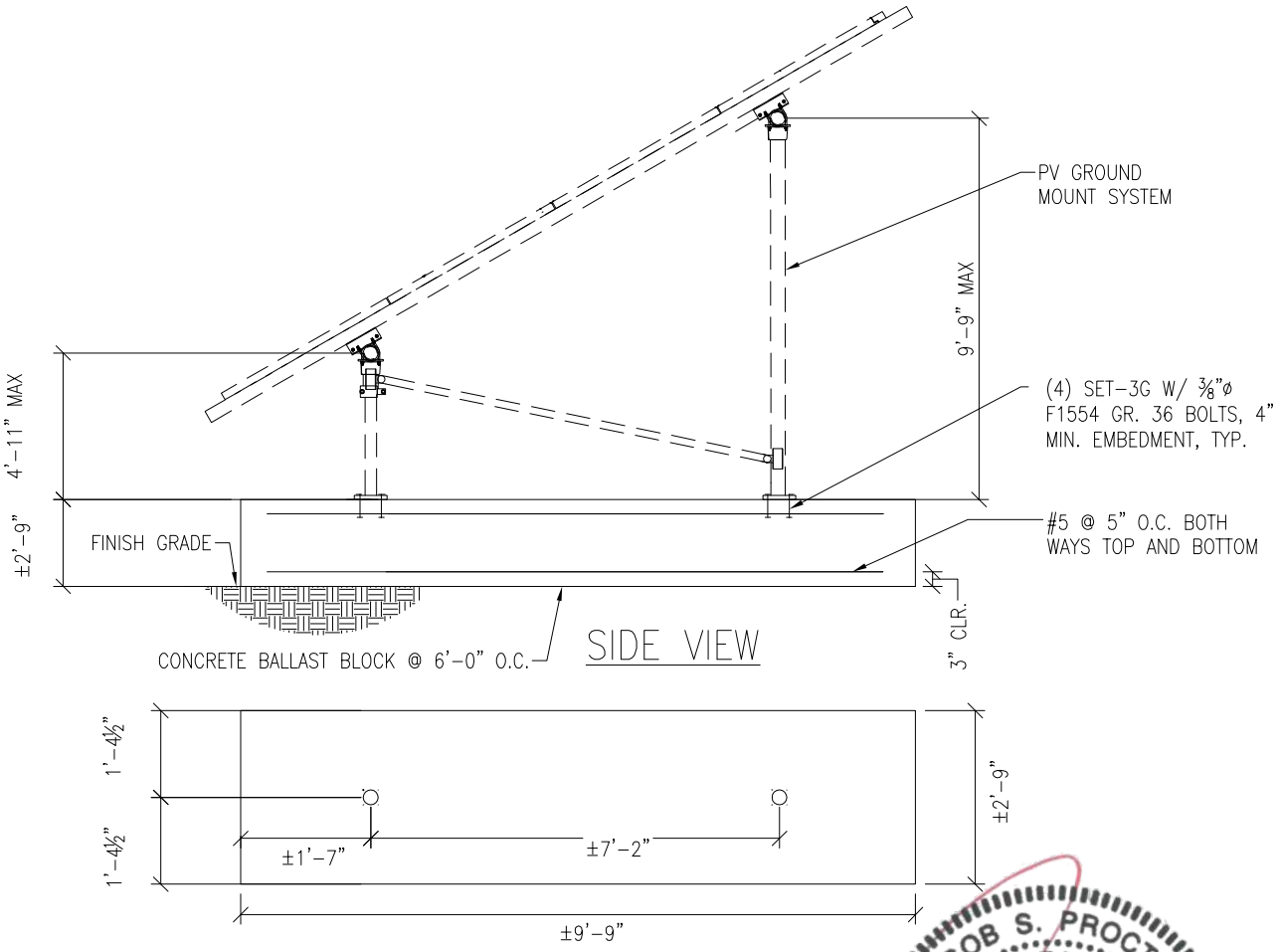

JACOB S. PROCTOR LICENSE No 74277 STATE OF FLORIDA PROFESSIONAL ENGINEER

Vector Engineers requires that we review each site specific install and is not liable for installs at site specific locations we have not reviewed.

PV ARRAY SECTION

N.T.S.

S4

651 W Galena Park Blvd. #101
Draper, Utah 84020
(801) 990-1775
(801) 990-1776 FAX
www.vectorse.com

03/30/2021

JOB NO.: U2716.0276.211
SUBJECT: SNOW LOADS

PROJECT: Sunturf Package A9 Ground Mount

SNOW LOADS

Calculations Per:	ASCE 7-16	
Snow Ground Load, p_g [psf]:	70.0	(Section 7.2)
Risk Category:	I	(Table 1.5-1)
Importance Factor, I_S:	0.8	(Table 1.5-2)
Terrain Category:	C	(Section 26.7)
Exposure of Roof:	Fully Exposed	(Table 7-3.1)
Exposure Factor, C_e:	0.9	(Table 7-3.1)
Thermal Factor, C_t:	1.2	(Table 7-3.2)
Flat Roof Snow Load, p_f [psf]:	42	(Equation 7.3-1)
Min. Roof Snow Load, p_m [psf]:	0	(Section 7.3.4)
Panel Slope from Horizontal [°]:	35.0	
Unobstructed Slippery Surface?	Yes	(Section 7.4)
Slope Factor Figure:	Figure 7-2c	(of Figure 7.4-1 - See Section 7.4)
Roof Slope Factor, C_s:	0.64	
Sloped Roof Snow Load, p_s [psf]:	27	(Equation 7.4-1)
Design Snow Load, S [psf]:	27	(1.0 Snow)

JOB NO.: U2716.0276.211
SUBJECT: WIND PRESSURES

PROJECT: Sunturf Package A9 Ground Mount

WIND PRESSURES

Calculations per:	ASCE 7-16	
Design Wind Speed, V [mph]:	140	
Risk Category:	I	(Table 1.5-1)
Exposure Category:	C	(Section 26.7)
Elevation [ft]:	9.2	
Ground Elevation Factor, K_e:	1.00	(Table 26.9-1)
α:	9.5	(Table 26.11-1)
z_g [ft]:	900	(Table 26.11-1)
Velocity Pressure Exposure Coefficient, K_h:	0.85	(Table 26.10-1)
Topographic Factor, K_{ht}:	1.0	(Section 26.8)
Wind Directionality Factor, K_d:	0.85	(Table 26.6-1)
Internal Pressure Coefficient, GC_{pi} :	0.00	(Figure 26.13-1)
Velocity Pressure, q_h [psf]:	36.19	(Equation 26.10-1)
Gust Effect Factor, G:	0.85	(Section 26.11.4)
Panel Slope [degrees]:	35.0	
Wind Flow:	Clear	
Roof Configuration:	Monoslope	

Wind Pressures in Transverse (N-S) Direction

Net Pressure Coefficients per Figure 27.3-4

Clear Wind Flow	C_{NW}	C_{NL}
Case 1 (γ = 0°, Load Case A)	-1.8	-1.8
Case 2 (γ = 0°, Load Case B)	-2.4	-0.6
Case 3 (γ = 180°, Load Case A)	2.1	2.1
Case 4 (γ = 180°, Load Case B)	2.7	1.1

Design Wind Pressures per Equation 27.3-2 [psf]

Clear Wind Flow	q_hGC_{NW}	q_hGC_{NL}
Case 1 (γ = 0°, Load Case A)	-55.4	-55.4
Case 2 (γ = 0°, Load Case B)	-73.8	-18.5
Case 3 (γ = 180°, Load Case A)	64.6	64.6
Case 4 (γ = 180°, Load Case B)	83.1	33.8
Case 5 (γ = 0°, 16 psf Min. Horiz.)	-16.0	-16.0
Case 6 (γ = 180°, 16 psf Min. Horiz)	16.0	16.0

Foundation Option 1: Drilled Concrete Pier

JOB NO.: U2716.0276.211
SUBJECT: CONC. PIER

PROJECT: Sunturf Package A9 Ground Mount

DRILLED CONCRETE PIER DESIGN

Column Reactions:

Max. Shear, V [k]:	1.8	Max. Down, P_d [k]:	3.2
Max. Moment, M [k-ft]:	0.0	Max. Uplift, P_u [k]:	2.8

Pier Properties:

Pier Shape:	Round		
Pier Diameter, b [ft]:	1.5	Volume of Concrete [ft^3]:	11
Top of Pier Elevation [ft]:	0.00	Volume of Concrete [yd^3]:	0.4
Pier Depth, d [ft]:	6.0	Weight of Concrete [k]:	1.6

Soil Properties:

Allow. Bearing Pressure [psf]:	1,500	Optional Parameters for Uplift:	
1/3 increase for short term loads?	No		
		Skin Friction* [psf]:	250
Lateral Bearing, S [pcf]:	150	Top Length to Ignore [ft]:	0
Max. Lateral Bearing (opt'l) [psf]:		1/3 increase for short term loads?	No
Top Depth to Ignore [ft]:	0		
1/3 increase for short term loads?	No	Combine w/ Bearing:	No
1/2" deflection at t/o pier allowed:	Yes		

*per IBC Section 1810.3.3.1.4

Check Bearing:

Bearing Capacity [k]:	7.1	**Bearing capacity OK.**

Check Uplift:

Uplift Capacity [k]:	8.5	**Uplift capacity OK.**

Check Lateral Bearing:

Top of Pier Constrained?:	No	IBC Section1807.3.2.1
Applied Lateral Force, P [lb]:	1,783	
Point of Application, h [ft]:	0.0	
$S_{\_max}$ [psf]:		
S [psf]:	600	
A = 2.34*P/(Sb):	4.64	
Required Pier Depth, d_{reqd} [ft]:	4.60	IBC Eq. 18-1

Result: **Lateral bearing capacity OK.**

Foundation Option 2: Helical Pier

The ground screws and helical piers must be tested to 1.5 times uplift and 2.0 times lateral reactions found in the table below.

Load (ASD)	Value (lbs)	Factor of Safety	Test Value (lbs)
UPLIFT	2790	1.5	4185
LATERAL	1783	2	3566

Foundation Option 3: Ground Screw

The ground screws and helical piers must be tested to 1.5 times uplift and 2.0 times lateral reactions found in the table below.

Load (ASD)	Value (lbs)	Factor of Safety	Test Value (lbs)
UPLIFT	2790	1.5	4185
LATERAL	1783	2	3566

Foundation Option 4: Ballasted Block

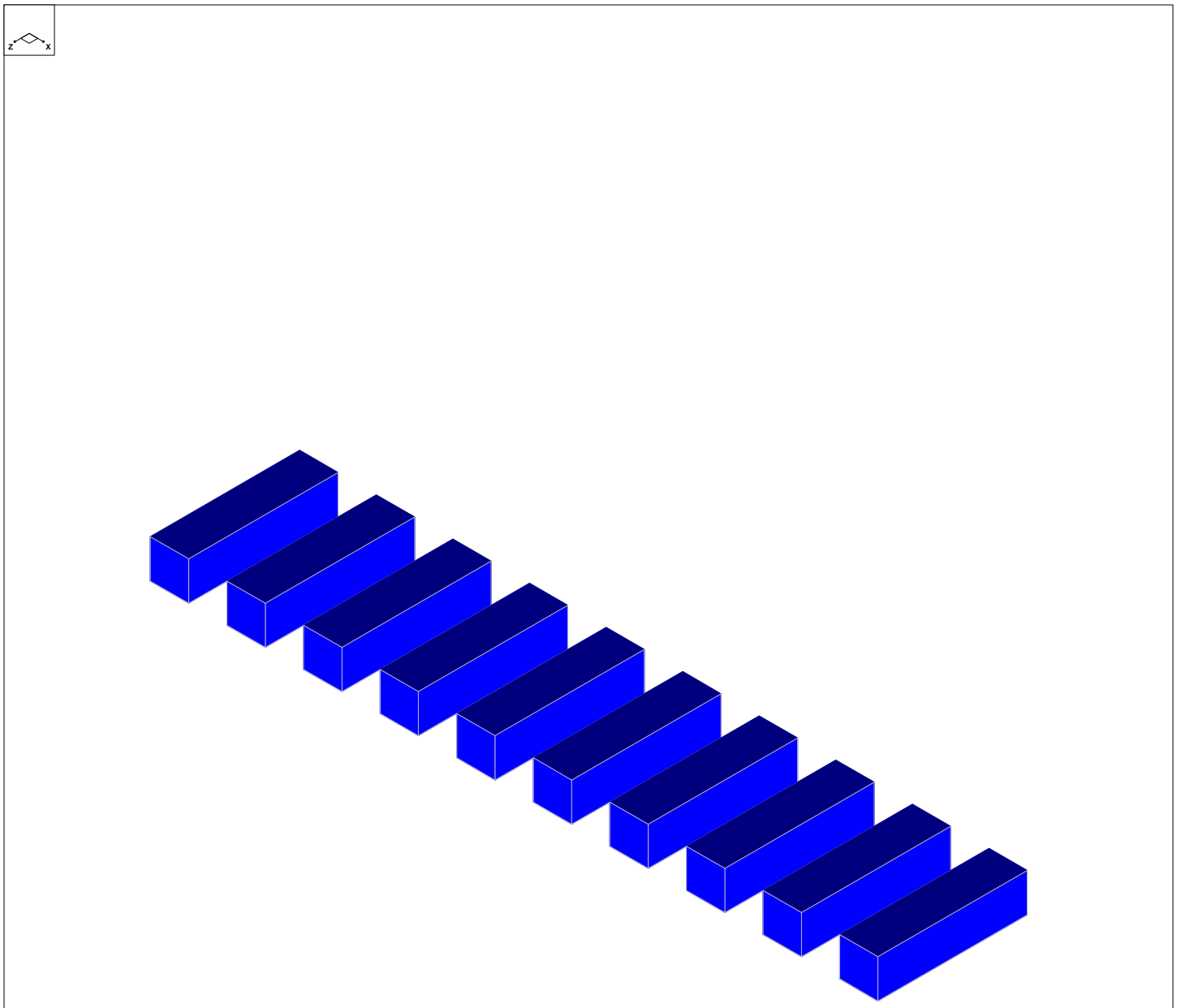

Results for LC 1, 1.0 D

Vector Structural Engineeri...	Ground Mount	SK - 2
STB		Mar 30, 2021 at 4:30 PM
U2716.115.191		Sunmodo Sunturf A9 v3 85x45.r3d

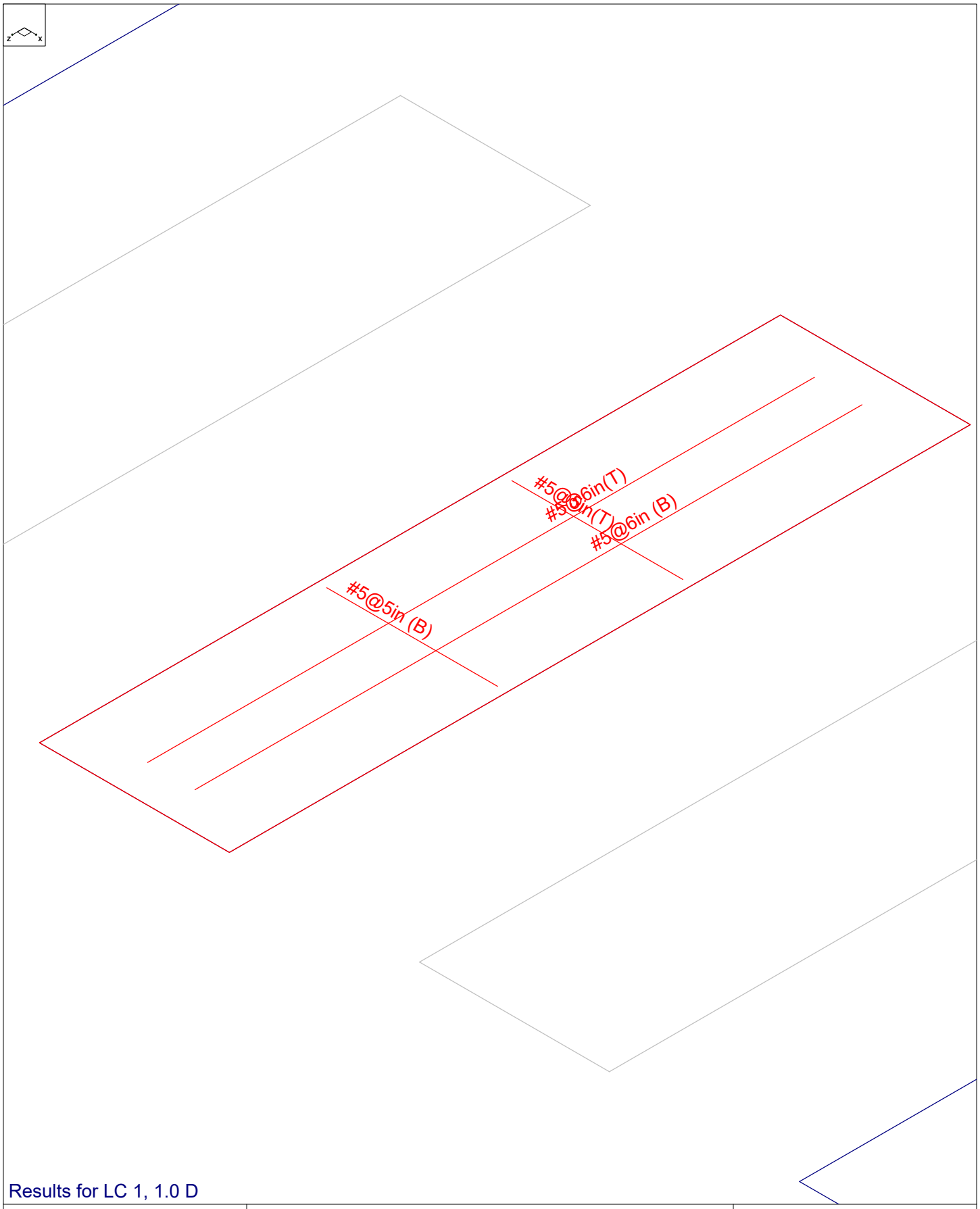

Results for LC 1, 1.0 D

Vector Structural Engineeri...		SK - 1
STB	Ground Mount	Mar 30, 2021 at 4:29 PM
U2716.115.191		Sunmodo Sunturf A9 v3 85x45.r3d

(Global) Model Settings

Display Sections for Member Calcs	5
Max Internal Sections for Member Calcs	100
Mesh Size (in)	12
Max Iterations	10
Merge Tolerance (in)	.12
Solver	Sparse Accelerated
Coefficient of Friction	.3
No. of Shear Regions	4
Shear Region Spacing Increment (in)	4
Min 1 Bar Dia Spacing for Beams?	No
Optimize footings for OTM / Sliding?	Yes
Parme Beta Factor	.65
Pile Safety Factor	3
Concrete Stress Block	0
Concrete Rebar Set	Rectangular
Concrete Code	ASTM A615
HR Steel Pile Code	ACI 318-14
Wood Pile Code	AISC 14th (360-10): ASD AWC NDS-15: ASD

Concrete Properties

	Label	E [ksi]	G [ksi]	Nu	Therm (/...	Density[lb/ft^3]	f'c[psi]	Lambda	Flex Stee...	Shear St...
1	Conc3000NW	3156	1372	.15	.6	145	3000	1	60000	60000
2	Conc3500NW	3409	1482	.15	.6	145	3500	1	60000	60000
3	Conc4000NW	3644	1584	.15	.6	145	4000	1	60000	60000
4	Conc3000LW	2085	907	.15	.6	109.999	3000	.75	60000	60000
5	Conc3500LW	2252	979	.15	.6	109.999	3500	.75	60000	60000
6	Conc4000LW	2408	1047	.15	.6	109.999	4000	.75	60000	60000
7	Conc2500NW	3156	1372	.15	.6	145	2500	1	60000	60000

General Design Parameters

	Label	Max Bending Chk	Max Shear Chk	Top Cover[in]	Bottom Cover[in]
1	Typical	1	1	3	3

Slab Rebar Parameters

	Label	Top Bar	Bottom Bar	Max Top Bar Sp...	Min Top Bar Sp...	Max Bot Bar Sp...	Min Bot Bar Sp...	Spacing Incr...	Rebar Options
1	Typical	#5	#5	12	3	12	3	1	Optimize

Soil Definitions

	Label	Subgrade Modulus[lb/ft^3]	Allowable Bearing[psf]	Depth Properties	Default?
1	Default	1e+5	1500	None	Yes

Point Loads and Moments (Cat 1 : DL)

	Label	Direction	Magnitude[lb,lb-ft]
1	R3D_N1_1	X	-3.98
2	R3D_N1_1	Y	178.273
3	R3D_N2	Y	158.516
4	R3D_N132_1	Y	174.459
5	R3D_N133_1	Y	168.182
6	R3D_N109_1	Y	171.845
7	R3D_N110A_1	Y	169.721
8	R3D_N121_1	Y	175.462

Point Loads and Moments (Cat 1 : DL) (Continued)

	Label	Direction	Magnitude[lb,lb-ft]
9	R3D_N122_1	Y	169.648
10	R3D_N133B	Y	176.265
11	R3D_N134B_1	Y	170.596
12	R3D_N151_1	Y	174.762
13	R3D_N152_1	Y	168.584
14	R3D_N143A	Y	175.943
15	R3D_N144A	Y	170.266
16	R3D_N149A_1	Y	176.347
17	R3D_N150A_1	Y	170.317
18	R3D_N155B	X	3.82
19	R3D_N155B	Y	188.842
20	R3D_N156B	Y	169.101
21	R3D_N161A	Y	167.594
22	R3D_N162A	Y	166.106

Point Loads and Moments (Cat 6 : RLL)

	Label	Direction	Magnitude[lb,lb-ft]
1	R3D_N1_1	X	-21.702
2	R3D_N1_1	Y	785.405
3	R3D_N2	X	-6.227
4	R3D_N2	Y	793.566
5	R3D_N132_1	X	-1.022
6	R3D_N132_1	Y	804.458
7	R3D_N133_1	X	-3.243
8	R3D_N133_1	Y	851.582
9	R3D_N109_1	Y	775.38
10	R3D_N109_1	Z	-2.175
11	R3D_N110A_1	Y	863.372
12	R3D_N121_1	Y	812.243
13	R3D_N121_1	Z	1.889
14	R3D_N122_1	X	2.144
15	R3D_N122_1	Y	860.793
16	R3D_N133B	Y	815.3
17	R3D_N134B_1	X	-1.204
18	R3D_N134B_1	Y	866.267
19	R3D_N151_1	X	1.092
20	R3D_N151_1	Y	806.457
21	R3D_N152_1	X	3.992
22	R3D_N152_1	Y	854.235
23	R3D_N143A	Y	813.328
24	R3D_N144A	X	2.085
25	R3D_N144A	Y	864.255
26	R3D_N149A_1	Y	817.326
27	R3D_N149A_1	Z	1.86
28	R3D_N150A_1	X	-1.808
29	R3D_N150A_1	Y	864.514
30	R3D_N155B	X	20.773
31	R3D_N155B	Y	846.639
32	R3D_N156B	X	1.002
33	R3D_N156B	Y	855.305
34	R3D_N161A	X	1.057
35	R3D_N161A	Y	750.771
36	R3D_N161A	Z	-2.077
37	R3D_N162A	X	2.549
38	R3D_N162A	Y	842.455

Point Loads and Moments (Cat 16 : OL1)

	Label	Direction	Magnitude[lb,lb-ft]
1	R3D_N1_1	X	64.071
2	R3D_N1_1	Y	-4003.466
3	R3D_N1_1	Z	2315.465
4	R3D_N2	X	8.986
5	R3D_N2	Y	716.924
6	R3D_N2	Z	-104.451
7	R3D_N132_1	X	3.164
8	R3D_N132_1	Y	-4168.337
9	R3D_N132_1	Z	2484.512
10	R3D_N133_1	X	1.423
11	R3D_N133_1	Y	767.395
12	R3D_N133_1	Z	-109.757
13	R3D_N109_1	X	1.029
14	R3D_N109_1	Y	-4073.985
15	R3D_N109_1	Z	2507.751
16	R3D_N110A_1	X	-1.739
17	R3D_N110A_1	Y	765.689
18	R3D_N110A_1	Z	-108.484
19	R3D_N121_1	X	-1.185
20	R3D_N121_1	Y	-4269.494
21	R3D_N121_1	Z	2535.009
22	R3D_N122_1	X	-6.527
23	R3D_N122_1	Y	829.706
24	R3D_N122_1	Z	-110.317
25	R3D_N133B	X	1.692
26	R3D_N133B	Y	-4229.023
27	R3D_N133B	Z	2515.941
28	R3D_N134B_1	X	-1.576
29	R3D_N134B_1	Y	781.946
30	R3D_N134B_1	Z	-110.291
31	R3D_N151_1	X	-3.253
32	R3D_N151_1	Y	-4216.587
33	R3D_N151_1	Z	2516.685
34	R3D_N152_1	X	-4.449
35	R3D_N152_1	Y	805.707
36	R3D_N152_1	Z	-110.212
37	R3D_N143A	X	-1.992
38	R3D_N143A	Y	-4197.39
39	R3D_N143A	Z	2495.456
40	R3D_N144A	Y	758.257
41	R3D_N144A	Z	-110.114
42	R3D_N149A_1	X	1.155
43	R3D_N149A_1	Y	-4295.71
44	R3D_N149A_1	Z	2551.214
45	R3D_N150A_1	X	5.521
46	R3D_N150A_1	Y	837.19
47	R3D_N150A_1	Z	-110.608
48	R3D_N155B	X	-61.38
49	R3D_N155B	Y	-4315.828
50	R3D_N155B	Z	2500.451
51	R3D_N156B	X	2.651
52	R3D_N156B	Y	779.386
53	R3D_N156B	Z	-109.432
54	R3D_N161A	X	-3.305
55	R3D_N161A	Y	-3957.978
56	R3D_N161A	Z	2438.721
57	R3D_N162A	X	-3.304

Point Loads and Moments (Cat 16 : OL1) (Continued)

	Label	Direction	Magnitude[lb,lb-ft]
58	R3D_N162A	Y	740.451
59	R3D_N162A	Z	-108.713

Point Loads and Moments (Cat 17 : OL2)

	Label	Direction	Magnitude[lb,lb-ft]
1	R3D_N1_1	X	82.935
2	R3D_N1_1	Y	-4476.769
3	R3D_N1_1	Z	1957.096
4	R3D_N2	Y	1652.203
5	R3D_N2	Z	-88.076
6	R3D_N132_1	X	4.068
7	R3D_N132_1	Y	-4630.095
8	R3D_N132_1	Z	2085.732
9	R3D_N133_1	X	-4.065
10	R3D_N133_1	Y	1762.991
11	R3D_N133_1	Z	-92.324
12	R3D_N109_1	X	1.21
13	R3D_N109_1	Y	-4499.95
14	R3D_N109_1	Z	2093.619
15	R3D_N110A_1	Y	1777.259
16	R3D_N110A_1	Z	-91.044
17	R3D_N121_1	X	-1.544
18	R3D_N121_1	Y	-4757.14
19	R3D_N121_1	Z	2148.644
20	R3D_N122_1	X	-4.456
21	R3D_N122_1	Y	1852.641
22	R3D_N122_1	Z	-93.107
23	R3D_N133B	X	2.156
24	R3D_N133B	Y	-4706.439
25	R3D_N133B	Z	2119.277
26	R3D_N134B_1	X	-4.127
27	R3D_N134B_1	Y	1807.942
28	R3D_N134B_1	Z	-92.928
29	R3D_N151_1	X	-4.193
30	R3D_N151_1	Y	-4689.856
31	R3D_N151_1	Z	2124.108
32	R3D_N152_1	X	1.584
33	R3D_N152_1	Y	1814.103
34	R3D_N152_1	Z	-92.865
35	R3D_N143A	X	-2.559
36	R3D_N143A	Y	-4667.336
37	R3D_N143A	Z	2095.517
38	R3D_N144A	X	2.477
39	R3D_N144A	Y	1775.783
40	R3D_N144A	Z	-92.701
41	R3D_N149A_1	X	1.509
42	R3D_N149A_1	Y	-4787.208
43	R3D_N149A_1	Z	2162.777
44	R3D_N150A_1	X	3.763
45	R3D_N150A_1	Y	1865.398
46	R3D_N150A_1	Z	-93.355
47	R3D_N155B	X	-79.401
48	R3D_N155B	Y	-4821.78
49	R3D_N155B	Z	2111.276
50	R3D_N156B	X	4.964
51	R3D_N156B	Y	1785.325

Point Loads and Moments (Cat 17 : OL2) (Continued)

	Label	Direction	Magnitude[lb,lb-ft]
52	R3D_N156B	Z	-92.221
53	R3D_N161A	X	-4.188
54	R3D_N161A	Y	-4372.776
55	R3D_N161A	Z	2038.377
56	R3D_N162A	Y	1729.376
57	R3D_N162A	Z	-91.307

Point Loads and Moments (Cat 18 : OL3)

	Label	Direction	Magnitude[lb,lb-ft]
1	R3D_N1_1	X	-74.711
2	R3D_N1_1	Y	4668.301
3	R3D_N1_1	Z	-2699.982
4	R3D_N2	X	-10.478
5	R3D_N2	Y	-835.98
6	R3D_N2	Z	121.797
7	R3D_N132_1	X	-3.689
8	R3D_N132_1	Y	4860.552
9	R3D_N132_1	Z	-2897.103
10	R3D_N133_1	X	-1.66
11	R3D_N133_1	Y	-894.833
12	R3D_N133_1	Z	127.984
13	R3D_N109_1	X	-1.2
14	R3D_N109_1	Y	4750.531
15	R3D_N109_1	Z	-2924.2
16	R3D_N110A_1	X	2.028
17	R3D_N110A_1	Y	-892.843
18	R3D_N110A_1	Z	126.5
19	R3D_N121_1	X	1.382
20	R3D_N121_1	Y	4978.507
21	R3D_N121_1	Z	-2955.985
22	R3D_N122_1	X	7.61
23	R3D_N122_1	Y	-967.491
24	R3D_N122_1	Z	128.637
25	R3D_N133B	X	-1.973
26	R3D_N133B	Y	4931.316
27	R3D_N133B	Z	-2933.751
28	R3D_N134B_1	X	1.838
29	R3D_N134B_1	Y	-911.8
30	R3D_N134B_1	Z	128.607
31	R3D_N151_1	X	3.793
32	R3D_N151_1	Y	4916.814
33	R3D_N151_1	Z	-2934.618
34	R3D_N152_1	X	5.188
35	R3D_N152_1	Y	-939.507
36	R3D_N152_1	Z	128.514
37	R3D_N143A	X	2.322
38	R3D_N143A	Y	4894.429
39	R3D_N143A	Z	-2909.864
40	R3D_N144A	X	1.153
41	R3D_N144A	Y	-884.176
42	R3D_N144A	Z	128.4
43	R3D_N149A_1	X	-1.347
44	R3D_N149A_1	Y	5009.077
45	R3D_N149A_1	Z	-2974.881
46	R3D_N150A_1	X	-6.437
47	R3D_N150A_1	Y	-976.218

Point Loads and Moments (Cat 18 : OL3) (Continued)

	Label	Direction	Magnitude[lb,lb-ft]
48	R3D_N150A_1	Z	128.976
49	R3D_N155B	X	71.573
50	R3D_N155B	Y	5032.536
51	R3D_N155B	Z	-2915.688
52	R3D_N156B	X	-3.091
53	R3D_N156B	Y	-908.815
54	R3D_N156B	Z	127.605
55	R3D_N161A	X	3.854
56	R3D_N161A	Y	4615.26
57	R3D_N161A	Z	-2843.708
58	R3D_N162A	X	3.853
59	R3D_N162A	Y	-863.414
60	R3D_N162A	Z	126.766

Point Loads and Moments (Cat 19 : OL4)

	Label	Direction	Magnitude[lb,lb-ft]
1	R3D_N1_1	X	-41.243
2	R3D_N1_1	Y	3206
3	R3D_N1_1	Z	-2417.766
4	R3D_N2	X	-15.803
5	R3D_N2	Y	184.124
6	R3D_N2	Z	109.253
7	R3D_N132_1	X	-2.061
8	R3D_N132_1	Y	3365.7
9	R3D_N132_1	Z	-2606.984
10	R3D_N133_1	X	-6.183
11	R3D_N133_1	Y	192.158
12	R3D_N133_1	Z	115.004
13	R3D_N109_1	Y	3312.106
14	R3D_N109_1	Z	-2641.729
15	R3D_N110A_1	X	3.014
16	R3D_N110A_1	Y	207.947
17	R3D_N110A_1	Z	113.857
18	R3D_N121_1	Y	3434.289
19	R3D_N121_1	Z	-2641.676
20	R3D_N122_1	X	7.761
21	R3D_N122_1	Y	160.065
22	R3D_N122_1	Z	115.312
23	R3D_N133B	X	-1.119
24	R3D_N133B	Y	3406.735
25	R3D_N133B	Z	-2633.578
26	R3D_N134B_1	Y	206.074
27	R3D_N134B_1	Z	115.425
28	R3D_N151_1	X	2.11
29	R3D_N151_1	Y	3399.162
30	R3D_N151_1	Z	-2630.609
31	R3D_N152_1	X	9.411
32	R3D_N152_1	Y	168.851
33	R3D_N152_1	Z	115.34
34	R3D_N143A	X	1.298
35	R3D_N143A	Y	3384.728
36	R3D_N143A	Z	-2617.934
37	R3D_N144A	X	3.986
38	R3D_N144A	Y	219.992
39	R3D_N144A	Z	115.309
40	R3D_N149A_1	Y	3454.612

Point Loads and Moments (Cat 19 : OL4) (Continued)

	Label	Direction	Magnitude[lb,lb-ft]
41	R3D_N149A_1	Z	-2658.208
42	R3D_N150A_1	X	-6.569
43	R3D_N150A_1	Y	157.985
44	R3D_N150A_1	Z	115.614
45	R3D_N155B	X	39.558
46	R3D_N155B	Y	3459.957
47	R3D_N155B	Z	-2612.864
48	R3D_N156B	Y	190.514
49	R3D_N156B	Z	114.512
50	R3D_N161A	X	2.208
51	R3D_N161A	Y	3216.937
52	R3D_N161A	Z	-2566.883
53	R3D_N162A	X	5.575
54	R3D_N162A	Y	210.628
55	R3D_N162A	Z	114.033

Slabs

	Label	Thickness [in]	Material	Local Axis Angle ...	Analysis Offset [in]	Passive Pressur...	Soil Overburden [psf]
1	S1	30	Conc2500NW	0	0	0	0
2	S2	30	Conc2500NW	0	0	0	0
3	S3	30	Conc2500NW	0	0	0	0
4	S4	30	Conc2500NW	0	0	0	0
5	S5	30	Conc2500NW	0	0	0	0
6	S6	30	Conc2500NW	0	0	0	0
7	S7	30	Conc2500NW	0	0	0	0
8	S8	30	Conc2500NW	0	0	0	0
9	S9	30	Conc2500NW	0	0	0	0
10	S10	30	Conc2500NW	0	0	0	0

Load Combinations

	Label	Solve	Service	A...	SF	Cat...	Fa...	Cat...	Fa...	Cat...	Fa...	Cat...	Fa...	Cat...	Fa...	Cat...	Fa...	Cat...	Fa...	Cat...	Fa...	C...	F...	C...	F...
1	1.0 D	Yes	Yes		1.5	DL	1																		
2	1.0 D + 1....	Yes	Yes		1.5	DL	1	RLL	1																
3	1.0 D + 0....	Yes	Yes		1.5	DL	1	RLL		OL1	.6														
4	1.0 D + 0....	Yes	Yes		1.5	DL	1	RLL		OL2	.6														
5	1.0 D + 0....	Yes	Yes		1.5	DL	1	RLL		OL3	.6														
6	1.0 D + 0....	Yes	Yes		1.5	DL	1	RLL		OL4	.6														
7	1.0 D + 0....	Yes	Yes		1.5	DL	1	RLL	.75	OL1	.45														
8	1.0 D + 0....	Yes	Yes		1.5	DL	1	RLL	.75	OL2	.45														
9	1.0 D + 0....	Yes	Yes		1.5	DL	1	RLL	.75	OL3	.45														
10	1.0 D + 0....	Yes	Yes		1.5	DL	1	RLL	.75	OL4	.45														
11	0.9 D + 0....	Yes	Yes			DL	.9	RLL		OL1	.6														
12	0.9 D + 0....	Yes	Yes			DL	.9	RLL		OL2	.6														
13	0.9 D + 0....	Yes	Yes			DL	.9	RLL		OL3	.6														
14	0.9 D + 0....	Yes	Yes			DL	.9	RLL		OL4	.6														
15																									
16	1.4D	Yes				DL	1.4																		
17	1.2D+1.6SL	Yes				DL	1.2	RLL	1.6																
18	1.2D+1.6S...	Yes				DL	1.2	RLL	1.6	OL1	.5														
19	1.2D+1.6S...	Yes				DL	1.2	RLL	1.6	OL2	.5														
20	1.2D+1.6S...	Yes				DL	1.2	RLL	1.6	OL3	.5														
21	1.2D+1.6S...	Yes				DL	1.2	RLL	1.6	OL4	.5														
22	1.2D+1.0...	Yes				DL	1.2			OL1	1														
23	1.2D-1.0Wx	Yes				DL	1.2			OL2	1														
24	1.2D+1.0...	Yes				DL	1.2			OL3	1														
25	1.2D-1.0Wz	Yes				DL	1.2			OL4	1														

Load Combinations (Continued)

	Label	Solve	Service	A..	SF	Cat..	Fa...	Cat..	Fa...	Cat..	Fa...	Cat..	Fa...	Cat..	Fa...	Cat..	Fa...	Cat..	Fa...	Cat..	Fa...	C...	F...	C...	F...
26	.9D+1.0Wx	Yes				DL	.9			OL1	1														
27	.9D-1.0Wx	Yes				DL	.9			OL2	1														
28	.9D+1.0Wz	Yes				DL	.9			OL3	1														
29	.9D-1.0Wz	Yes				DL	.9			OL4	1														

Design Strips

	Label	Rebar Angle from Pl...	No. of Design Cuts	Design Rule
1	DS1	0	50	Typical
2	DS2	90	50	Typical

Load Categories

	Category	Point Loads	Line Loads	Area Loads
1	DL	22		
2	RLL	38		
3	OL1	59		
4	OL2	57		
5	OL3	60		
6	OL4	55		

Strip Reinforcing

	Label	UC Top	LC	Top Bars	Governing ...	UC Bot	LC	Bot B...	Gover...	UC Shear	LC	Governing De...
1	DS1	.011	20	#5@6in	DS1-X26	.027	27	#5@6in	DS1-...	.043	27	DS1-X15
2	DS2	.001	26	#5@5in	DS2-X26	.002	20	#5@5in	DS2-...	.005	20	DS2-X21

Slab Overturning Safety Factors (By Combination)

	LC	Slab	Angle[deg]	Mo-xx[lb-ft]	Ms-xx[lb-ft]	Mo-zz[lb-ft]	Ms-zz[lb-ft]	Ms-xx/Mo-xx	Ms-zz/Mo-zz
1	1	S1	0	0	44676.928	0	11475.878	9.999+	9.999+
2	1	S2	0	0	44761.589	0	11471.897	9.999+	9.999+
3	1	S3	0	0	44766.406	0	11476.329	9.999+	9.999+
4	1	S4	0	0	44775.584	0	11478.516	9.999+	9.999+
5	1	S5	0	0	44752.562	0	11473.242	9.999+	9.999+
6	1	S6	0	0	44756.402	0	11474.124	9.999+	9.999+
7	1	S7	0	0	44772.324	0	11477.701	9.999+	9.999+
8	1	S8	0	0	44773.366	0	11478.271	9.999+	9.999+
9	1	S9	0	0	44724.787	0	11462.065	9.999+	9.999+
10	1	S10	0	0	44781.872	0	11482.82	9.999+	9.999+
11	2	S1	0	0	52534.209	0	13519.416	9.999+	9.999+
12	2	S2	0	0	53185.93	0	13520.337	9.999+	9.999+
13	2	S3	0	0	53234.493	0	13562.262	9.999+	9.999+
14	2	S4	0	0	53289.61	0	13583.485	9.999+	9.999+
15	2	S5	0	0	53126.723	0	13553.955	9.999+	9.999+
16	2	S6	0	0	53155.89	0	13537.281	9.999+	9.999+
17	2	S7	0	0	53266.457	0	13569.467	9.999+	9.999+
18	2	S8	0	0	53280.321	0	13585.09	9.999+	9.999+
19	2	S9	0	0	52936.412	0	13444.584	9.999+	9.999+
20	2	S10	0	0	53250.638	0	13555.812	9.999+	9.999+
21	3	S1	0	22560.178	44757.456	2574.492	11475.878	1.984	4.458
22	3	S2	0	23152.615	44719.361	2482.287	11471.897	1.932	4.622
23	3	S3	0	24107.311	44749.112	2591.409	11476.329	1.856	4.429
24	3	S4	0	23916.625	44756.996	2585.481	11478.516	1.871	4.44
25	3	S5	0	23581.528	44738.878	2557.588	11473.242	1.897	4.486
26	3	S6	0	23837.29	44741.917	2569.713	11474.124	1.877	4.465
27	3	S7	0	23748.531	44753.897	2582.337	11477.701	1.884	4.445
28	3	S8	0	24254.964	44757.301	2603.904	11478.271	1.845	4.408
29	3	S9	0	22494.684	44679.471	2423.059	11462.065	1.986	4.73

Slab Overturning Safety Factors (By Combination) (Continued)

	LC	Slab	Angle[deg]	Mo-xx[lb-ft]	Ms-xx[lb-ft]	Mo-zz[lb-ft]	Ms-zz[lb-ft]	Ms-xx/Mo-xx	Ms-zz/Mo-zz
30	3	S10	0	24326.412	44858.768	2740.425	11501.921	1.844	4.197
31	4	S1	0	23641.811	44757.456	2242.828	11475.878	1.893	5.117
32	4	S2	0	23856.842	44719.361	2043.834	11471.897	1.874	5.613
33	4	S3	0	25149.074	44749.112	2187.374	11476.329	1.779	5.247
34	4	S4	0	24890.079	44756.996	2176.829	11478.516	1.798	5.273
35	4	S5	0	24498.726	44738.878	2150.334	11473.242	1.826	5.336
36	4	S6	0	24810.404	44741.917	2160.729	11474.124	1.803	5.31
37	4	S7	0	24686.946	44753.897	2168.787	11477.701	1.813	5.292
38	4	S8	0	25308.53	44757.301	2199.267	11478.271	1.768	5.219
39	4	S9	0	23182.38	44679.471	1988.832	11462.065	1.927	5.763
40	4	S10	0	25468.172	44858.768	2388.997	11501.921	1.761	4.815
41	5	S1	0	3887.513	44676.928	0	14477.902	9.999+	9.999+
42	5	S2	0	4429.938	44761.589	0	14363.922	9.999+	9.999+
43	5	S3	0	4646.207	44766.406	0	14471.102	9.635	9.999+
44	5	S4	0	4374.133	44775.584	0	14493.355	9.999+	9.999+
45	5	S5	0	4298.097	44752.562	0	14455.555	9.999+	9.999+
46	5	S6	0	4528.544	44756.402	0	14443.631	9.883	9.999+
47	5	S7	0	4232.31	44772.324	0	14480.178	9.999+	9.999+
48	5	S8	0	4690.598	44773.366	0	14514.592	9.545	9.999+
49	5	S9	0	4281.931	44724.787	0	14264.389	9.999+	9.999+
50	5	S10	0	4242.368	44781.872	0	14472.888	9.999+	9.999+
51	6	S1	0	0	45029.378	0	14104.041	9.999+	9.999+
52	6	S2	0	0	45000.801	0	14107.417	9.999+	9.999+
53	6	S3	0	0	44876.041	0	14160.454	9.999+	9.999+
54	6	S4	0	0	45105.083	0	14189.802	9.999+	9.999+
55	6	S5	0	0	45014.112	0	14154.001	9.999+	9.999+
56	6	S6	0	0	44895.434	0	14132.853	9.999+	9.999+
57	6	S7	0	0	45175.593	0	14173.314	9.999+	9.999+
58	6	S8	0	0	44866.44	0	14197.573	9.999+	9.999+
59	6	S9	0	0	45004.42	0	14021.065	9.999+	9.999+
60	6	S10	0	0	45110.391	0	14161.337	9.999+	9.999+
61	7	S1	0	16920.134	50410.74	1930.869	13008.531	2.979	6.737
62	7	S2	0	17364.461	50384.5	1861.715	13008.227	2.902	6.987
63	7	S3	0	18080.484	50632.14	1943.557	13048.82	2.8	6.714
64	7	S4	0	17937.469	50667.96	1938.851	13052.729	2.825	6.732
65	7	S5	0	17686.146	50568.069	1918.191	13033.777	2.859	6.795
66	7	S6	0	17877.967	50586.131	1927.285	13040.553	2.83	6.766
67	7	S7	0	17811.398	50650.648	1936.753	13054.346	2.844	6.74
68	7	S8	0	18191.223	50675.559	1952.928	13058.385	2.786	6.687
69	7	S9	0	16871.013	50171.243	1817.294	12962.475	2.974	7.133
70	7	S10	0	18244.809	50952.678	2055.319	13138.321	2.793	6.392
71	8	S1	0	17731.358	50410.74	1682.121	13008.531	2.843	7.733
72	8	S2	0	17892.631	50384.5	1532.876	13008.227	2.816	8.486
73	8	S3	0	18861.806	50632.14	1640.531	13048.82	2.684	7.954
74	8	S4	0	18667.559	50667.96	1632.621	13052.729	2.714	7.995
75	8	S5	0	18374.045	50568.069	1612.742	13017.782	2.752	8.072
76	8	S6	0	18607.803	50586.131	1620.547	13040.553	2.719	8.047
77	8	S7	0	18515.209	50650.648	1626.406	13046.525	2.736	8.022
78	8	S8	0	18981.398	50675.559	1649.45	13058.385	2.67	7.917
79	8	S9	0	17386.785	50171.243	1491.624	12962.475	2.886	8.69
80	8	S10	0	19101.129	50952.678	1791.748	13138.321	2.668	7.333
81	9	S1	0	2915.635	50569.889	0	15260.05	9.999+	9.999+
82	9	S2	0	3322.453	51079.845	0	15177.246	9.999+	9.999+
83	9	S3	0	3484.656	51117.471	0	15286.858	9.999+	9.999+
84	9	S4	0	3280.6	51161.103	0	15318.372	9.999+	9.999+
85	9	S5	0	3223.573	51033.183	0	15270.512	9.999+	9.999+
86	9	S6	0	3396.408	51056.018	0	15248.622	9.999+	9.999+

Slab Overturning Safety Factors (By Combination) (Continued)

	LC	Slab	Angle[deg]	Mo-xx[lb-ft]	Ms-xx[lb-ft]	Mo-zz[lb-ft]	Ms-zz[lb-ft]	Ms-xx/Mo-xx	Ms-zz/Mo-zz
87	9	S7	0	3174.233	51142.924	0	15298.383	9.999+	9.999+
88	9	S8	0	3517.949	51153.582	0	15335.626	9.999+	9.999+
89	9	S9	0	3211.448	50883.505	0	15050.697	9.999+	9.999+
90	9	S10	0	3181.776	51133.447	0	15280.114	9.999+	9.999+
91	10	S1	0	0	50834.226	0	14979.653	9.999+	9.999+
92	10	S2	0	0	51259.254	0	14984.867	9.999+	9.999+
93	10	S3	0	0	51199.697	0	15053.872	9.999+	9.999+
94	10	S4	0	0	51408.228	0	15090.707	9.999+	9.999+
95	10	S5	0	0	51229.345	0	15044.346	9.999+	9.999+
96	10	S6	0	0	51160.292	0	15015.538	9.999+	9.999+
97	10	S7	0	0	51445.376	0	15068.235	9.999+	9.999+
98	10	S8	0	0	51223.388	0	15097.861	9.999+	9.999+
99	10	S9	0	0	51093.23	0	14868.205	9.999+	9.999+
100	10	S10	0	0	51379.836	0	15046.451	9.999+	9.999+
101	11	S1	0	22560.178	40281.71	2574.492	10328.29	1.786	4.012
102	11	S2	0	23152.615	40247.425	2482.287	10324.707	1.738	4.159
103	11	S3	0	24107.311	40274.201	2591.409	10328.696	1.671	3.986
104	11	S4	0	23916.625	40281.296	2585.481	10330.665	1.684	3.996
105	11	S5	0	23581.528	40264.991	2557.588	10325.918	1.707	4.037
106	11	S6	0	23837.29	40267.726	2569.713	10326.712	1.689	4.019
107	11	S7	0	23748.531	40278.508	2582.337	10329.931	1.696	4
108	11	S8	0	24254.964	40281.571	2603.904	10330.444	1.661	3.967
109	11	S9	0	22494.684	40211.524	2423.059	10315.858	1.788	4.257
110	11	S10	0	24326.412	40372.891	2740.425	10351.729	1.66	3.777
111	12	S1	0	23641.811	40281.71	2242.828	10328.29	1.704	4.605
112	12	S2	0	23856.842	40247.425	2043.834	10324.707	1.687	5.052
113	12	S3	0	25149.074	40274.201	2187.374	10328.696	1.601	4.722
114	12	S4	0	24890.079	40281.296	2176.829	10330.665	1.618	4.746
115	12	S5	0	24498.726	40264.991	2150.334	10325.918	1.644	4.802
116	12	S6	0	24810.404	40267.726	2160.729	10326.712	1.623	4.779
117	12	S7	0	24686.946	40278.508	2168.787	10329.931	1.632	4.763
118	12	S8	0	25308.53	40281.571	2199.267	10330.444	1.592	4.697
119	12	S9	0	23182.38	40211.524	1988.832	10315.858	1.735	5.187
120	12	S10	0	25468.172	40372.891	2388.997	10351.729	1.585	4.333
121	13	S1	0	3887.513	40209.235	0	13330.314	9.999+	9.999+
122	13	S2	0	4429.938	40285.43	0	13216.732	9.094	9.999+
123	13	S3	0	4646.207	40289.765	0	13323.469	8.672	9.999+
124	13	S4	0	4374.133	40298.026	0	13345.503	9.213	9.999+
125	13	S5	0	4298.097	40277.306	0	13308.231	9.371	9.999+
126	13	S6	0	4528.544	40280.762	0	13296.219	8.895	9.999+
127	13	S7	0	4232.31	40295.091	0	13332.408	9.521	9.999+
128	13	S8	0	4690.598	40296.029	0	13366.765	8.591	9.999+
129	13	S9	0	4281.931	40252.308	0	13118.182	9.401	9.999+
130	13	S10	0	4242.368	40303.685	0	13324.606	9.5	9.999+
131	14	S1	0	0	40561.685	0	12956.453	9.999+	9.999+
132	14	S2	0	0	40524.642	0	12960.227	9.999+	9.999+
133	14	S3	0	0	40399.4	0	13012.821	9.999+	9.999+
134	14	S4	0	0	40627.525	0	13041.951	9.999+	9.999+
135	14	S5	0	0	40538.856	0	13006.677	9.999+	9.999+
136	14	S6	0	0	40419.794	0	12985.44	9.999+	9.999+
137	14	S7	0	0	40698.36	0	13025.544	9.999+	9.999+
138	14	S8	0	0	40389.103	0	13049.745	9.999+	9.999+
139	14	S9	0	0	40531.941	0	12874.859	9.999+	9.999+
140	14	S10	0	0	40632.204	0	13013.055	9.999+	9.999+

Slab Sliding Safety Factors (By Combination)

	LC	Slab	Angle[deg]	Va-xx[lb]	Vr-xx[lb]	Va-zz[lb]	Vr-zz[lb]	SR-xx	SR-zz
1	1	S1	0	3.98	2751.822	0	2751.822	9.999+	9.999+
2	1	S2	0	0	2753.255	0	2753.255	9.999+	9.999+
3	1	S3	0	0	2754.319	0	2754.319	9.999+	9.999+
4	1	S4	0	0	2754.844	0	2754.844	9.999+	9.999+
5	1	S5	0	0	2753.578	0	2753.578	9.999+	9.999+
6	1	S6	0	0	2753.79	0	2753.79	9.999+	9.999+
7	1	S7	0	0	2754.648	0	2754.648	9.999+	9.999+
8	1	S8	0	0	2754.785	0	2754.785	9.999+	9.999+
9	1	S9	0	0	2750.896	0	2750.896	9.999+	9.999+
10	1	S10	0	3.82	2758.169	0	2758.169	9.999+	9.999+
11	2	S1	0	31.91	3225.514	0	3225.514	9.999+	9.999+
12	2	S2	0	0	3244.881	2.175	3244.881	9.999+	9.999+
13	2	S3	0	2.144	3256.23	1.889	3256.23	9.999+	9.999+
14	2	S4	0	1.204	3259.314	0	3259.314	9.999+	9.999+
15	2	S5	0	4.265	3250.39	0	3250.39	9.999+	9.999+
16	2	S6	0	5.083	3251.997	0	3251.997	9.999+	9.999+
17	2	S7	0	2.085	3257.923	0	3257.923	9.999+	9.999+
18	2	S8	0	1.808	3259.337	1.86	3259.337	9.999+	9.999+
19	2	S9	0	3.606	3228.864	2.077	3228.864	9.999+	9.999+
20	2	S10	0	25.595	3268.752	0	3268.752	9.999+	9.999+
21	3	S1	0	39.854	2160.245	1326.608	2160.245	9.999+	1.628
22	3	S2	0	.426	2157.762	1439.56	2157.762	9.999+	1.499
23	3	S3	0	4.627	2135.157	1454.815	2135.157	9.999+	1.468
24	3	S4	0	.069	2134.37	1443.39	2134.37	9.999+	1.479
25	3	S5	0	2.752	2141.409	1424.853	2141.409	9.999+	1.503
26	3	S6	0	4.622	2139.831	1443.884	2139.831	9.999+	1.482
27	3	S7	0	1.195	2135.604	1431.205	2135.604	9.999+	1.492
28	3	S8	0	4.006	2132.251	1464.363	2132.251	9.999+	1.456
29	3	S9	0	3.966	2171.741	1398.005	2171.741	9.999+	1.553
30	3	S10	0	31.417	2121.609	1434.611	2121.609	9.999+	1.479
31	4	S1	0	45.781	2243.401	1121.412	2243.401	9.999+	2.001
32	4	S2	0	.726	2263.171	1201.545	2263.171	9.999+	1.884
33	4	S3	0	3.6	2231.509	1233.322	2231.509	9.999+	1.809
34	4	S4	0	1.182	2233.114	1215.809	2233.114	9.999+	1.837
35	4	S5	0	.002	2237.499	1196.045	2237.499	9.999+	1.871
36	4	S6	0	1.566	2236.154	1218.746	2236.154	9.999+	1.835
37	4	S7	0	.049	2234.169	1201.69	2234.169	9.999+	1.859
38	4	S8	0	3.164	2228.859	1241.653	2228.859	9.999+	1.795
39	4	S9	0	2.513	2275.083	1168.242	2275.083	9.999+	1.947
40	4	S10	0	40.842	2211.607	1211.433	2211.607	9.999+	1.826
41	5	S1	0	55.094	3441.64	1546.911	3441.64	9.999+	2.225
42	5	S2	0	.497	3447.639	1678.62	3447.639	9.999+	2.054
43	5	S3	0	5.396	3476.302	1696.409	3476.302	9.999+	2.049
44	5	S4	0	.081	3478.357	1683.086	3478.357	9.999+	2.067
45	5	S5	0	3.21	3467.408	1661.471	3467.408	9.999+	2.087
46	5	S6	0	5.389	3469.705	1683.662	3469.705	9.999+	2.061
47	5	S7	0	2.085	3476.494	1668.878	3476.494	9.999+	2.083
48	5	S8	0	4.671	3480.7	1707.543	3480.7	9.999+	2.038
49	5	S9	0	4.624	3426.228	1630.165	3426.228	9.999+	2.102
50	5	S10	0	44.909	3500.439	1672.85	3500.439	9.999+	2.093
51	6	S1	0	38.208	3362.045	1385.108	3362.045	9.999+	2.427
52	6	S2	0	1.808	3386.865	1516.723	3386.865	9.999+	2.233
53	6	S3	0	4.656	3401.303	1515.818	3401.303	9.999+	2.244
54	6	S4	0	.672	3405.15	1510.892	3405.15	9.999+	2.254
55	6	S5	0	4.946	3393.993	1495.188	3393.993	9.999+	2.27
56	6	S6	0	6.912	3396.032	1509.161	3396.032	9.999+	2.25
57	6	S7	0	3.171	3403.498	1501.575	3403.498	9.999+	2.267

Slab Sliding Safety Factors (By Combination) (Continued)

	LC	Slab	Angle[deg]	Va-xx[lb]	Vr-xx[lb]	Va-zz[lb]	Vr-zz[lb]	SR-xx	SR-zz
58	6	S8	0	3.942	3405.052	1525.556	3405.052	9.999+	2.232
59	6	S9	0	4.669	3367.857	1471.71	3367.857	9.999+	2.288
60	6	S10	0	27.555	3415.254	1499.011	3415.254	9.999+	2.278
61	7	S1	0	7.948	2663.408	994.956	2663.408	9.999+	2.677
62	7	S2	0	.319	2675.355	1078.039	2675.355	9.999+	2.482
63	7	S3	0	1.862	2666.381	1092.529	2666.381	9.999+	2.441
64	7	S4	0	.851	2667.841	1082.542	2667.841	9.999+	2.464
65	7	S5	0	1.135	2667.06	1068.64	2667.06	9.999+	2.496
66	7	S6	0	.346	2666.977	1082.913	2666.977	9.999+	2.463
67	7	S7	0	.668	2667.822	1073.404	2667.822	9.999+	2.485
68	7	S8	0	1.648	2666.299	1099.668	2666.299	9.999+	2.425
69	7	S9	0	.27	2675.005	1046.946	2675.005	9.999+	2.555
70	7	S10	0	6.277	2663.687	1075.958	2663.687	9.999+	2.476
71	8	S1	0	12.393	2725.774	841.059	2725.774	9.999+	3.241
72	8	S2	0	.545	2754.411	899.527	2754.411	9.999+	3.062
73	8	S3	0	1.091	2738.644	926.409	2738.644	9.999+	2.956
74	8	S4	0	1.789	2741.9	911.857	2741.9	9.999+	3.007
75	8	S5	0	3.197	2739.128	897.033	2739.128	9.999+	3.054
76	8	S6	0	2.638	2739.219	914.059	2739.219	9.999+	2.997
77	8	S7	0	1.527	2741.745	901.267	2741.745	9.999+	3.042
78	8	S8	0	1.017	2738.755	932.635	2738.755	9.999+	2.937
79	8	S9	0	.82	2752.513	874.624	2752.513	9.999+	3.147
80	8	S10	0	13.345	2731.185	908.575	2731.185	9.999+	3.006
81	9	S1	0	63.263	3624.454	1160.183	3624.454	9.999+	3.124
82	9	S2	0	.373	3642.762	1260.596	3642.762	9.999+	2.89
83	9	S3	0	5.655	3672.239	1270.89	3672.239	9.999+	2.89
84	9	S4	0	.963	3675.831	1262.315	3675.831	9.999+	2.912
85	9	S5	0	5.606	3661.559	1246.103	3661.559	9.999+	2.938
86	9	S6	0	7.854	3664.382	1262.747	3664.382	9.999+	2.902
87	9	S7	0	3.128	3673.489	1251.659	3673.489	9.999+	2.935
88	9	S8	0	4.859	3677.635	1279.262	3677.635	9.999+	2.875
89	9	S9	0	6.172	3615.871	1224.181	3615.871	9.999+	2.954
90	9	S10	0	50.968	3697.808	1254.637	3697.808	9.999+	2.947
91	10	S1	0	50.598	3564.758	1038.831	3564.758	9.999+	3.432
92	10	S2	0	1.356	3597.182	1139.174	3597.182	9.999+	3.158
93	10	S3	0	5.101	3615.99	1135.447	3615.99	9.999+	3.185
94	10	S4	0	1.406	3620.926	1133.169	3620.926	9.999+	3.195
95	10	S5	0	6.909	3606.498	1121.391	3606.498	9.999+	3.216
96	10	S6	0	8.997	3609.127	1131.871	3609.127	9.999+	3.189
97	10	S7	0	3.942	3618.742	1126.181	3618.742	9.999+	3.213
98	10	S8	0	4.312	3620.9	1142.772	3620.9	9.999+	3.169
99	10	S9	0	6.206	3572.093	1105.34	3572.093	9.999+	3.232
100	10	S10	0	37.952	3633.92	1124.258	3633.92	9.999+	3.232
101	11	S1	0	40.252	1885.063	1326.608	1885.063	9.999+	1.421
102	11	S2	0	.426	1882.436	1439.56	1882.436	9.999+	1.308
103	11	S3	0	4.627	1859.725	1454.815	1859.725	9.999+	1.278
104	11	S4	0	.069	1858.886	1443.39	1858.886	9.999+	1.288
105	11	S5	0	2.752	1866.051	1424.853	1866.051	9.999+	1.31
106	11	S6	0	4.622	1864.452	1443.884	1864.452	9.999+	1.291
107	11	S7	0	1.195	1860.139	1431.205	1860.139	9.999+	1.3
108	11	S8	0	4.006	1856.773	1464.363	1856.773	9.999+	1.268
109	11	S9	0	3.966	1896.651	1398.005	1896.651	9.999+	1.357
110	11	S10	0	31.799	1845.792	1434.611	1845.792	9.999+	1.287
111	12	S1	0	46.179	1968.218	1121.412	1968.218	9.999+	1.755
112	12	S2	0	.726	1987.845	1201.545	1987.845	9.999+	1.654
113	12	S3	0	3.6	1956.077	1233.322	1956.077	9.999+	1.586
114	12	S4	0	1.182	1957.63	1215.809	1957.63	9.999+	1.61

Slab Sliding Safety Factors (By Combination) (Continued)

	LC	Slab	Angle[deg]	Va-xx[lb]	Vr-xx[lb]	Va-zz[lb]	Vr-zz[lb]	SR-xx	SR-zz
115	12	S5	0	.002	1962.141	1196.045	1962.141	9.999+	1.641
116	12	S6	0	1.566	1960.775	1218.746	1960.775	9.999+	1.609
117	12	S7	0	.049	1958.704	1201.69	1958.704	9.999+	1.63
118	12	S8	0	3.164	1953.381	1241.653	1953.381	9.999+	1.573
119	12	S9	0	2.513	1999.994	1168.242	1999.994	9.999+	1.712
120	12	S10	0	41.224	1935.79	1211.433	1935.79	9.999+	1.598
121	13	S1	0	54.696	3166.458	1546.911	3166.458	9.999+	2.047
122	13	S2	0	.497	3172.314	1678.62	3172.314	9.999+	1.89
123	13	S3	0	5.396	3200.87	1696.409	3200.87	9.999+	1.887
124	13	S4	0	.081	3202.872	1683.086	3202.872	9.999+	1.903
125	13	S5	0	3.21	3192.05	1661.471	3192.05	9.999+	1.921
126	13	S6	0	5.389	3194.326	1683.662	3194.326	9.999+	1.897
127	13	S7	0	2.085	3201.029	1668.878	3201.029	9.999+	1.918
128	13	S8	0	4.671	3205.221	1707.543	3205.221	9.999+	1.877
129	13	S9	0	4.624	3151.138	1630.165	3151.138	9.999+	1.933
130	13	S10	0	44.527	3224.622	1672.85	3224.622	9.999+	1.928
131	14	S1	0	37.81	3086.863	1385.108	3086.863	9.999+	2.229
132	14	S2	0	1.808	3111.539	1516.723	3111.539	9.999+	2.051
133	14	S3	0	4.656	3125.871	1515.818	3125.871	9.999+	2.062
134	14	S4	0	.672	3129.665	1510.892	3129.665	9.999+	2.071
135	14	S5	0	4.946	3118.635	1495.188	3118.635	9.999+	2.086
136	14	S6	0	6.912	3120.653	1509.161	3120.653	9.999+	2.068
137	14	S7	0	3.171	3128.033	1501.575	3128.033	9.999+	2.083
138	14	S8	0	3.942	3129.574	1525.556	3129.574	9.999+	2.051
139	14	S9	0	4.669	3092.768	1471.71	3092.768	9.999+	2.101
140	14	S10	0	27.173	3139.437	1499.011	3139.437	9.999+	2.094

Envelope Slab Soil Pressures

	Label	UC	LC	Soil Pressure[psf]	Allowable Bearing[psf]	Point
1	S1	.5	5	749.942	1500	N282
2	S2	.504	5	756.357	1500	N289
3	S3	.517	5	775.948	1500	N296
4	S4	.514	5	770.922	1500	N303
5	S5	.51	5	765.041	1500	N310
6	S6	.514	5	770.514	1500	N317
7	S7	.512	5	767.368	1500	N324
8	S8	.519	5	778.557	1500	N331
9	S9	.497	5	745.054	1500	N338
10	S10	.52	5	780.05	1500	N345

1.Project information

Customer company:
Customer contact name:
Customer e-mail:
Comment:

Project description:
Location:
Fastening description:

2. Input Data & Anchor Parameters

General
Design method:ACI 318-14
Units: Imperial units

Anchor Information:
Anchor type: Bonded anchor
Material: F1554 Grade 36
Diameter (inch): 0.375
Effective Embedment depth, h_{ef} (inch): 4.000
Code report: ICC-ES ESR-4057
Anchor category: -
Anchor ductility: Yes
h_{min} (inch): 5.25
c_{ac} (inch): 7.12
C_{min} (inch): 1.75
S_{min} (inch): 3.00

Base Material
Concrete: Normal-weight
Concrete thickness, h (inch): 30.00
State: Cracked
Compressive strength, f'_c (psi): 2500
$\Psi_{c,V}$: 1.0
Reinforcement condition: B tension, B shear
Supplemental reinforcement: Not applicable
Reinforcement provided at corners: No
Ignore concrete breakout in tension: No
Ignore concrete breakout in shear: No
Hole condition: Dry concrete
Inspection: Periodic
Temperature range, Short/Long: 150/110°F
Ignore 6do requirement: Not applicable
Build-up grout pad: No

Base Plate
Length x Width x Thickness (inch): 4.75 x 4.75 x 0.31

Recommended Anchor
Anchor Name: SET-3G - SET-3G w/ 3/8"Ø F1554 Gr. 36
Code Report: ICC-ES ESR-4057

Load and Geometry
Load factor source: ACI 318 Section 5.3
Load combination: not set
Seismic design: No
Anchors subjected to sustained tension: No
Apply entire shear load at front row: No
Anchors only resisting wind and/or seismic loads: No

Strength level loads:

N_{ua} [lb]: 4680
V_{uax} [lb]: 160
V_{uay} [lb]: -2970
M_{ux} [ft-lb]: 0
M_{uy} [ft-lb]: 0
M_{uz} [ft-lb]: 0

<Figure 1>

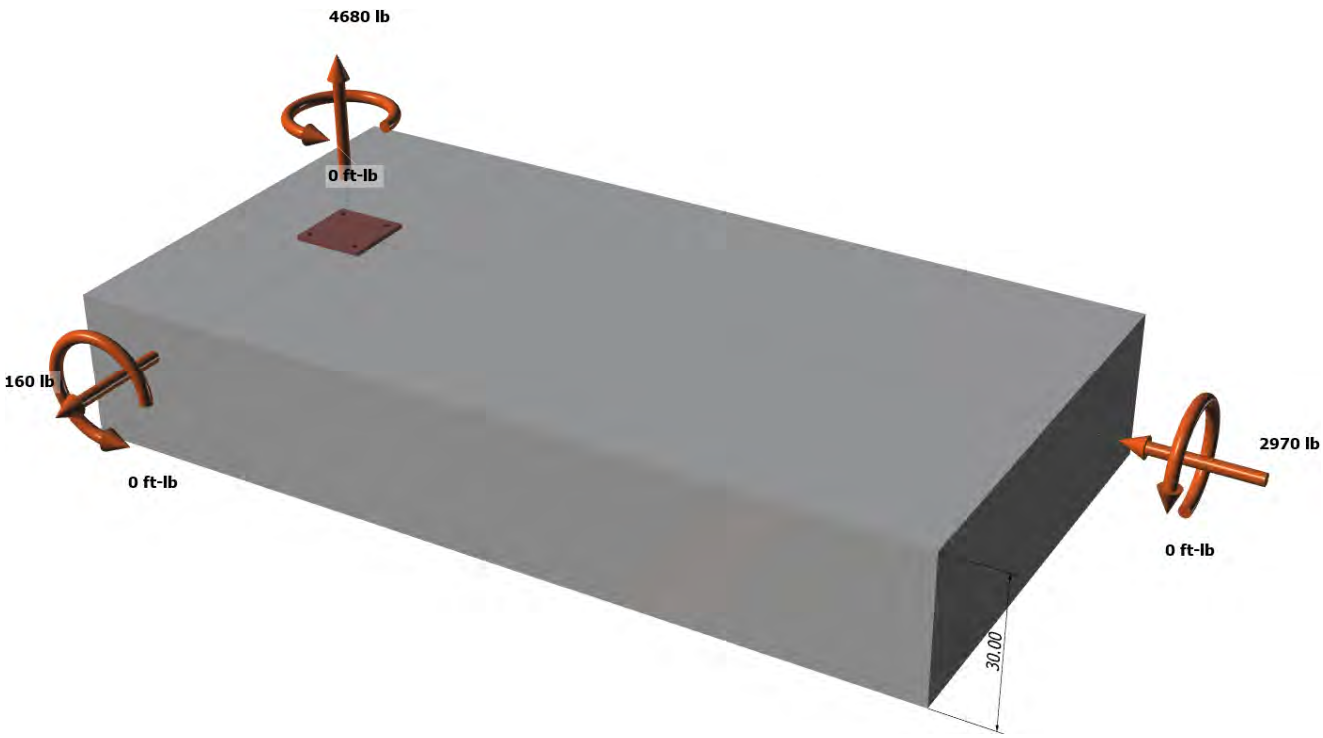

<Figure 2>

3. Resulting Anchor Forces

Anchor	Tension load, N_{ua} (lb)	Shear load x, V_{uax} (lb)	Shear load y, V_{uay} (lb)	Shear load combined, $\sqrt{(V_{uax})^2+(V_{uay})^2}$ (lb)
1	1170.0	40.0	-742.5	743.6
2	1170.0	40.0	-742.5	743.6
3	1170.0	40.0	-742.5	743.6
4	1170.0	40.0	-742.5	743.6
Sum	4680.0	160.0	-2970.0	2974.3

Maximum concrete compression strain (‰): 0.00
Maximum concrete compression stress (psi): 0
Resultant tension force (lb): 4680
Resultant compression force (lb): 0
Eccentricity of resultant tension forces in x-axis, e'_{Nx} (inch): 0.00
Eccentricity of resultant tension forces in y-axis, e'_{Ny} (inch): 0.00
Eccentricity of resultant shear forces in x-axis, e'_{Vx} (inch): 0.00
Eccentricity of resultant shear forces in y-axis, e'_{Vy} (inch): 0.00

<Figure 3>

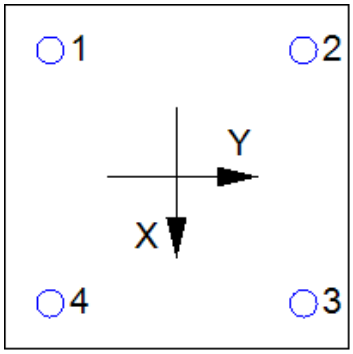

4. Steel Strength of Anchor in Tension (Sec. 17.4.1)

N_{sa} (lb)	ϕ	ϕN_{sa} (lb)
4525	0.75	3394

5. Concrete Breakout Strength of Anchor in Tension (Sec. 17.4.2)

$N_b = k_c \lambda_a \sqrt{f'_c} h_{ef}^{1.5}$ (Eq. 17.4.2.2a)

k_c	λ_a	f'_c (psi)	h_{ef} (in)	N_b (lb)
17.0	1.00	2500	4.000	6800

$\phi N_{cbg} = \phi (A_{Nc} / A_{Nco}) \Psi_{ec,N} \Psi_{ed,N} \Psi_{c,N} \Psi_{cp,N} N_b$ (Sec. 17.3.1 & Eq. 17.4.2.1b)

A_{Nc} (in^2)	A_{Nco} (in^2)	$c_{a,min}$ (in)	$\Psi_{ec,N}$	$\Psi_{ed,N}$	$\Psi_{c,N}$	$\Psi_{cp,N}$	N_b (lb)	ϕ	ϕN_{cbg} (lb)
240.25	144.00	7.25	1.000	1.000	1.00	1.000	6800	0.65	7374

6. Adhesive Strength of Anchor in Tension (Sec. 17.4.5)

$\tau_{k,cr} = \tau_{k,cr} f_{short\text{-}term} K_{sat} (f'_c / 2{,}500)^n$

$\tau_{k,cr}$ (psi)	$f_{short\text{-}term}$	K_{sat}	f'_c (psi)	n	$\tau_{k,cr}$ (psi)
1346	1.00	1.00	2500	0.24	1346

$N_{ba} = \lambda_a \tau_{cr} \pi d_a h_{ef}$ (Eq. 17.4.5.2)

λ_a	τ_{cr} (psi)	d_a (in)	h_{ef} (in)	N_{ba} (lb)
1.00	1346	0.38	4.000	6343

$\phi N_{ag} = \phi (A_{Na} / A_{Na0}) \Psi_{ec,Na} \Psi_{ed,Na} \Psi_{cp,Na} N_{ba}$ (Sec. 17.3.1 & Eq. 17.4.5.1b)

A_{Na} (in^2)	A_{Na0} (in^2)	c_{Na} (in)	$c_{a,min}$ (in)	$\Psi_{ec,Na}$	$\Psi_{ed,Na}$	$\Psi_{cp,Na}$	N_{ba}(lb)	ϕ	ϕN_{ag} (lb)
198.45	112.09	5.29	7.25	1.000	1.000	1.000	6343	0.55	6176

8. Steel Strength of Anchor in Shear (Sec. 17.5.1)

V_{sa} (lb)	ϕ_{grout}	ϕ	$\phi_{grout}\phi V_{sa}$ (lb)
2715	1.0	0.65	1765

9. Concrete Breakout Strength of Anchor in Shear (Sec. 17.5.2)

Shear perpendicular to edge in x-direction:

$V_{bx} = \min|7(l_e / d_a)^{0.2}\sqrt{d_a}\lambda_a\sqrt{f'_c}c_{a1}^{1.5};\ 9\lambda_a\sqrt{f'_c}c_{a1}^{1.5}|$ (Eq. 17.5.2.2a & Eq. 17.5.2.2b)

l_e (in)	d_a (in)	λ_a	f'_c (psi)	c_{a1} (in)	V_{bx} (lb)
3.00	0.375	1.00	2500	16.75	22270

$\phi V_{cbgx} = \phi\,(A_{Vc} / A_{Vco})\Psi_{ec,V}\Psi_{ed,V}\Psi_{c,V}\Psi_{h,V}V_{bx}$ (Sec. 17.3.1 & Eq. 17.5.2.1b)

A_{Vc} (in^2)	A_{Vco} (in^2)	$\Psi_{ec,V}$	$\Psi_{ed,V}$	$\Psi_{c,V}$	$\Psi_{h,V}$	V_{bx} (lb)	ϕ	ϕV_{cbgx} (lb)
901.36	1262.53	1.000	0.787	1.000	1.000	22270	0.70	8754

Shear perpendicular to edge in y-direction:

$V_{by} = \min|7(l_e / d_a)^{0.2}\sqrt{d_a}\lambda_a\sqrt{f'_c}c_{a1}^{1.5};\ 9\lambda_a\sqrt{f'_c}c_{a1}^{1.5}|$ (Eq. 17.5.2.2a & Eq. 17.5.2.2b)

l_e (in)	d_a (in)	λ_a	f'_c (psi)	c_{a1} (in)	V_{by} (lb)
3.00	0.375	1.00	2500	10.75	11450

$\phi V_{cbgy} = \phi\,(A_{Vc} / A_{Vco})\Psi_{ec,V}\Psi_{ed,V}\Psi_{c,V}\Psi_{h,V}V_{by}$ (Sec. 17.3.1 & Eq. 17.5.2.1b)

A_{Vc} (in^2)	A_{Vco} (in^2)	$\Psi_{ec,V}$	$\Psi_{ed,V}$	$\Psi_{c,V}$	$\Psi_{h,V}$	V_{by} (lb)	ϕ	ϕV_{cbgy} (lb)
483.75	520.03	1.000	0.947	1.000	1.000	11450	0.70	7057

Shear parallel to edge in y-direction:

$V_{bx} = \min|7(l_e / d_a)^{0.2}\sqrt{d_a}\lambda_a\sqrt{f'_c}c_{a1}^{1.5};\ 9\lambda_a\sqrt{f'_c}c_{a1}^{1.5}|$ (Eq. 17.5.2.2a & Eq. 17.5.2.2b)

l_e (in)	d_a (in)	λ_a	f'_c (psi)	c_{a1} (in)	V_{bx} (lb)
3.00	0.375	1.00	2500	13.25	15668

$\phi V_{cbgy} = \phi\,(2)(A_{Vc} / A_{Vco})\Psi_{ec,V}\Psi_{ed,V}\Psi_{c,V}\Psi_{h,V}V_{bx}$ (Sec. 17.3.1, 17.5.2.1(c) & Eq. 17.5.2.1b)

A_{Vc} (in^2)	A_{Vco} (in^2)	$\Psi_{ec,V}$	$\Psi_{ed,V}$	$\Psi_{c,V}$	$\Psi_{h,V}$	V_{bx} (lb)	ϕ	ϕV_{cbgy} (lb)
608.67	790.03	1.000	1.000	1.000	1.000	15668	0.70	16900

Shear parallel to edge in x-direction:

$V_{by} = \min|7(l_e / d_a)^{0.2}\sqrt{d_a}\lambda_a\sqrt{f'_c}c_{a1}^{1.5};\ 9\lambda_a\sqrt{f'_c}c_{a1}^{1.5}|$ (Eq. 17.5.2.2a & Eq. 17.5.2.2b)

l_e (in)	d_a (in)	λ_a	f'_c (psi)	c_{a1} (in)	V_{by} (lb)
3.00	0.375	1.00	2500	7.25	6342

$\phi V_{cbgx} = \phi\,(2)(A_{Vc} / A_{Vco})\Psi_{ec,V}\Psi_{ed,V}\Psi_{c,V}\Psi_{h,V}V_{by}$ (Sec. 17.3.1, 17.5.2.1(c) & Eq. 17.5.2.1b)

A_{Vc} (in^2)	A_{Vco} (in^2)	$\Psi_{ec,V}$	$\Psi_{ed,V}$	$\Psi_{c,V}$	$\Psi_{h,V}$	V_{by} (lb)	ϕ	ϕV_{cbgx} (lb)
274.59	236.53	1.000	1.000	1.000	1.000	6342	0.70	10307

10. Concrete Pryout Strength of Anchor in Shear (Sec. 17.5.3)

$\phi V_{cpg} = \phi \min|k_{cp}N_{ag}\ ;\ k_{cp}N_{cbg}| = \phi \min|k_{cp}(A_{Na} / A_{Na0})\Psi_{ec,Na}\Psi_{ed,Na}\Psi_{cp,Na}N_{ba}\ ;\ k_{cp}(A_{Nc} / A_{Nco})\Psi_{ec,N}\Psi_{ed,N}\Psi_{c,N}\Psi_{cp,N}N_b|$ (Sec. 17.3.1 & Eq. 17.5.3.1b)

k_{cp}	A_{Na} (in^2)	A_{Na0} (in^2)	$\Psi_{ed,Na}$	$\Psi_{ec,Na}$	$\Psi_{cp,Na}$	N_{ba} (lb)	N_a (lb)
2.0	198.45	112.09	1.000	1.000	1.000	6343	11230

A_{Nc} (in^2)	A_{Nco} (in^2)	$\Psi_{ec,N}$	$\Psi_{ed,N}$	$\Psi_{c,N}$	$\Psi_{cp,N}$	N_b (lb)	N_{cb} (lb)	ϕ
240.25	144.00	1.000	1.000	1.000	1.000	6800	11345	0.70

ϕV_{cpg} (lb)
15722

11. Results

Interaction of Tensile and Shear Forces (Sec. R17.6)

Tension	Factored Load, N_{ua} (lb)	Design Strength, ϕN_n (lb)	Ratio	Status
Steel	1170	3394	0.34	Pass
Concrete breakout	4680	7374	0.63	Pass
Adhesive	**4680**	**6176**	**0.76**	**Pass (Governs)**

Shear	Factored Load, V_{ua} (lb)	Design Strength, ϕV_n (lb)	Ratio	Status
Steel	**744**	**1765**	**0.42**	**Pass (Governs)**
T Concrete breakout x+	160	8754	0.02	Pass
T Concrete breakout y-	2970	7057	0.42	Pass
|| Concrete breakout x+	1485	16900	0.09	Pass
|| Concrete breakout y-	80	10307	0.01	Pass
Concrete breakout, combined	-	-	0.42	Pass
Pryout	2974	15722	0.19	Pass

Interaction check	$(N_{ua}/\phi N_{ua})^{5/3}$	$(V_{ua}/\phi V_{ua})^{5/3}$	Combined Ratio	Permissible	Status
Sec. R17.6	0.63	0.24	86.7%	1.0	Pass

SET-3G w/ 3/8"Ø F1554 Gr. 36 with hef = 4.000 inch meets the selected design criteria.

12. Warnings

- Designer must exercise own judgement to determine if this design is suitable.

- Refer to manufacturer's product literature for hole cleaning and installation instructions.

Framing Analysis

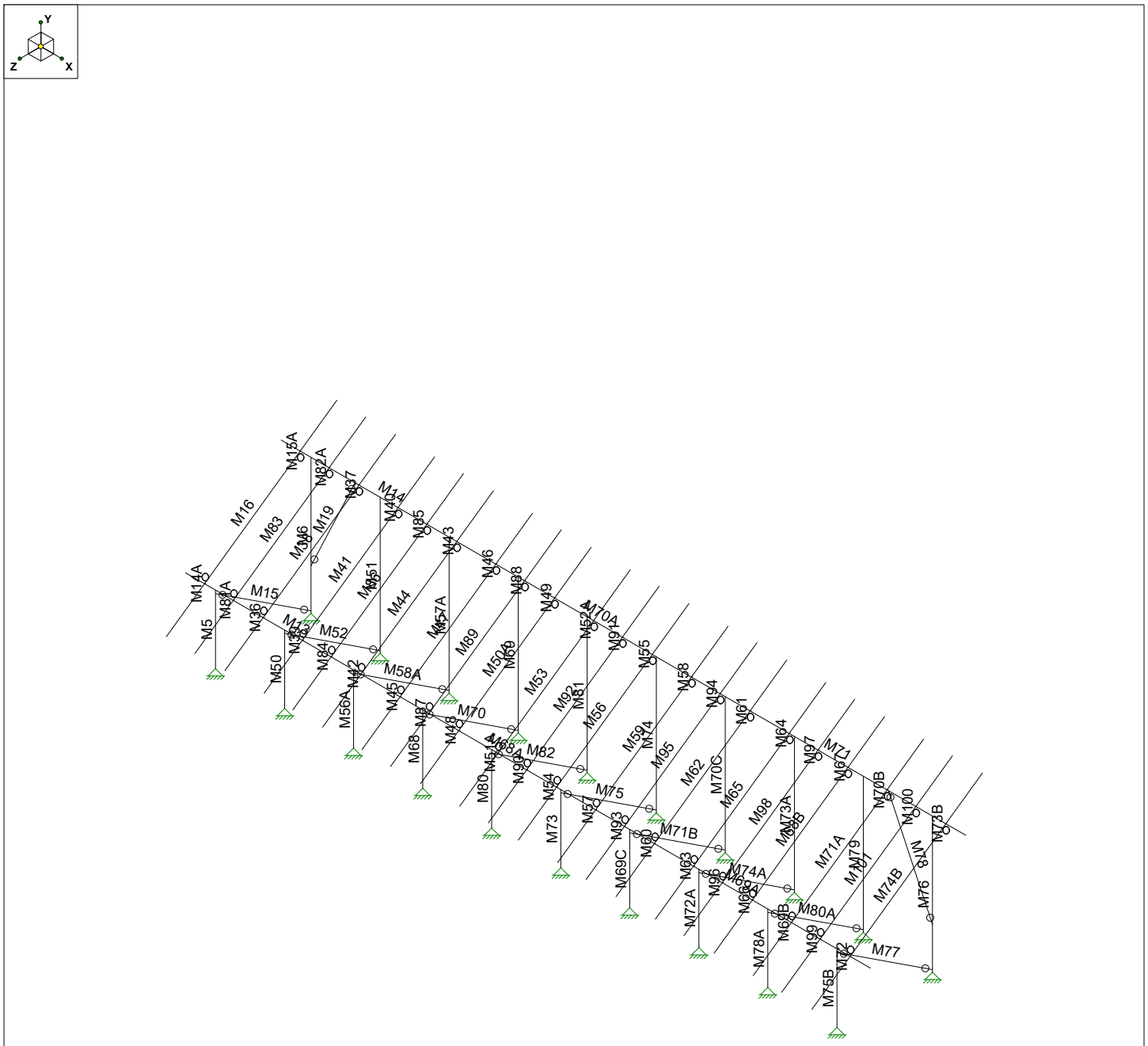

Vector Structural Engineeri...		SK - 3
STB	Ground Mount	Mar 30, 2021 at 4:23 PM
U2716.0276.211		Sunmodo Sunturf A9 v3 85x45.r3d

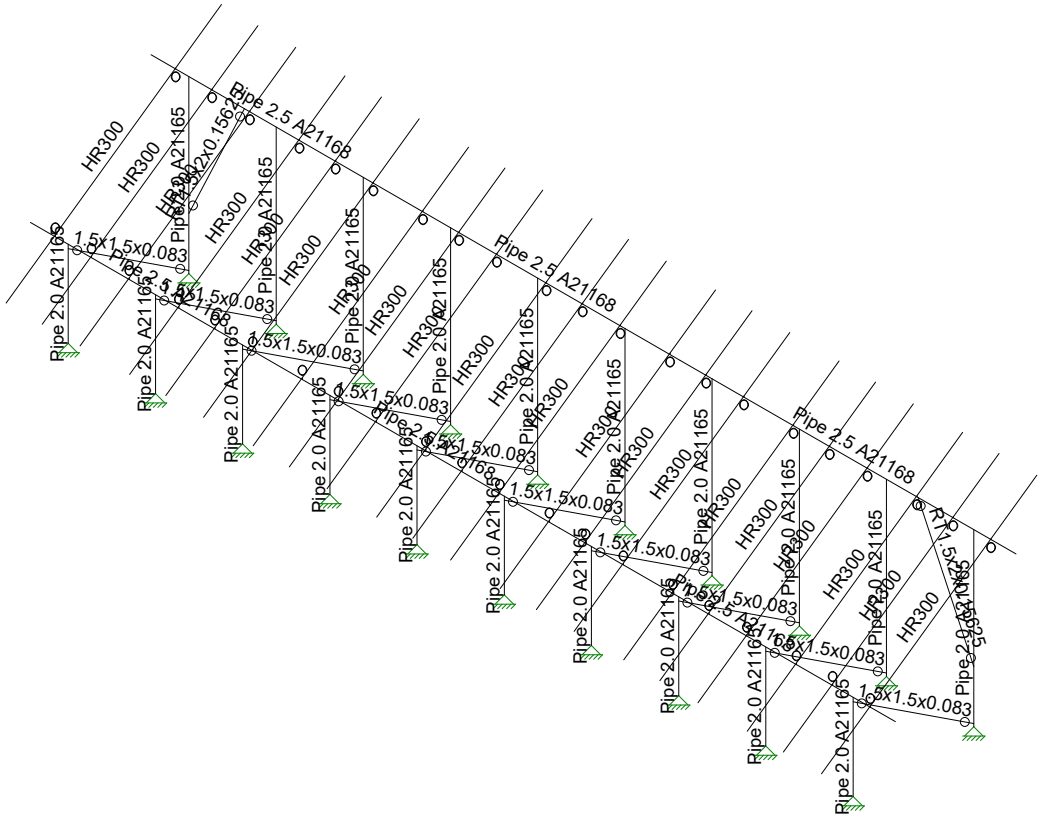

Vector Structural Engineeri...		SK - 4
STB	Ground Mount	Mar 30, 2021 at 4:23 PM
U2716.0276.211		Sunmodo Sunturf A9 v3 85x45.r3d

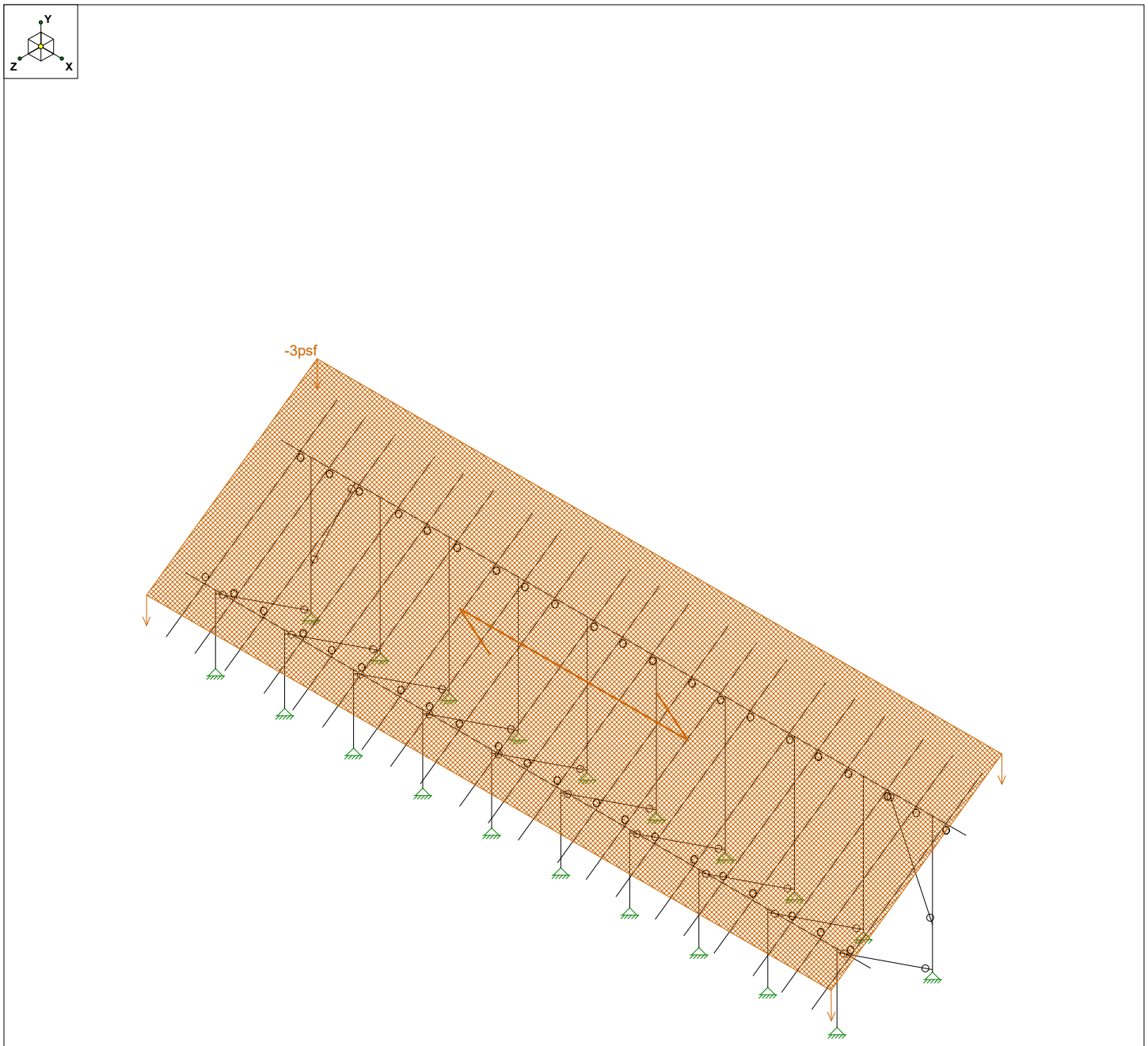

Loads: BLC 2, Solar Panel Weight

Vector Structural Engineeri...		SK - 5
STB	Ground Mount	Mar 30, 2021 at 4:23 PM
U2716.0276.211		Sunmodo Sunturf A9 v3 85x45.r3d

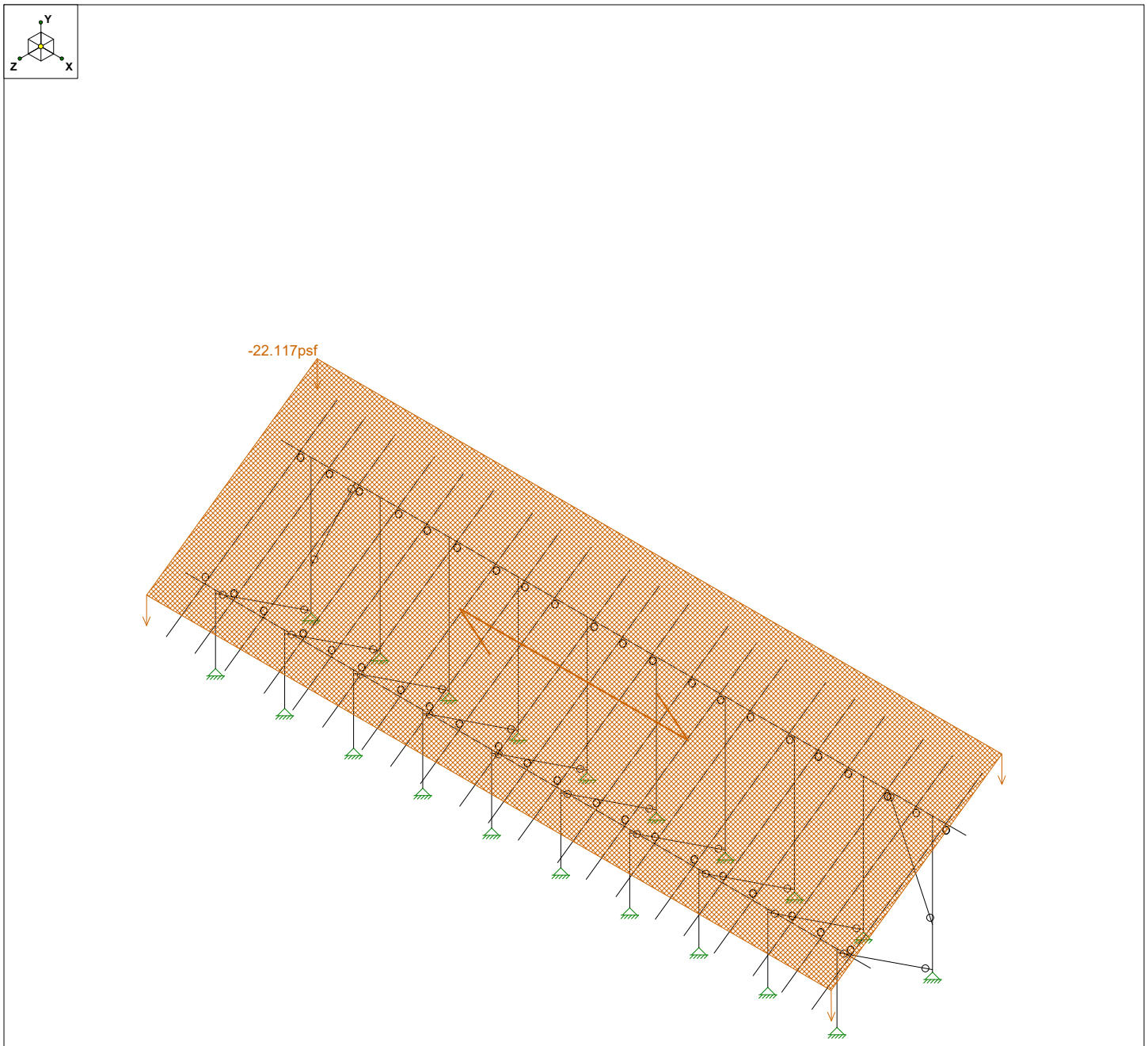

Loads: BLC 3, Roof Live/Snow

Vector Structural Engineeri...		SK - 6
STB	Ground Mount	Mar 30, 2021 at 4:23 PM
U2716.0276.211		Sunmodo Sunturf A9 v3 85x45.r3d

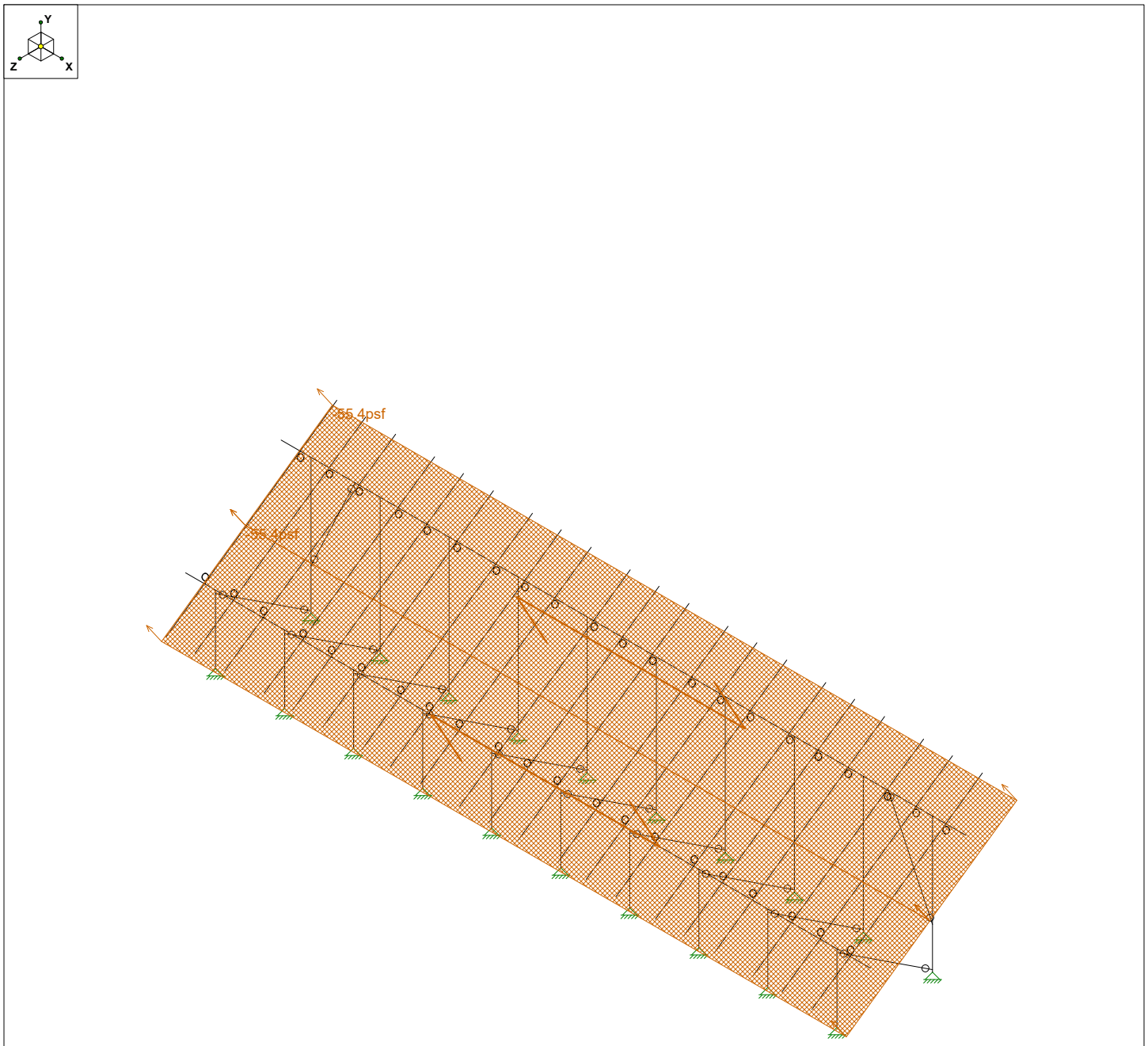

Loads: BLC 4, Wind A 0 deg

Vector Structural Engineeri...		SK - 7
STB	Ground Mount	Mar 30, 2021 at 4:24 PM
U2716.0276.211		Sunmodo Sunturf A9 v3 85x45.r3d

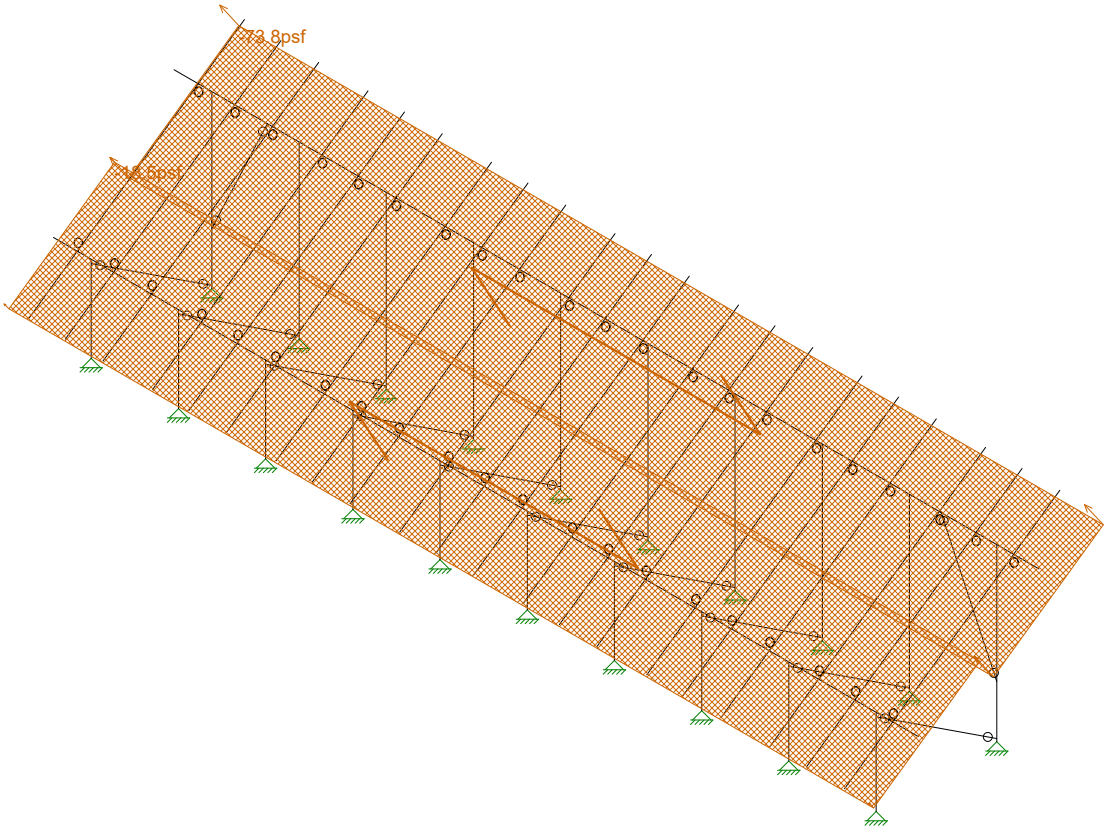

Loads: BLC 5, Wind B 0 deg

Vector Structural Engineeri...		SK - 8
STB	Ground Mount	Mar 30, 2021 at 4:24 PM
U2716.0276.211		Sunmodo Sunturf A9 v3 85x45.r3d

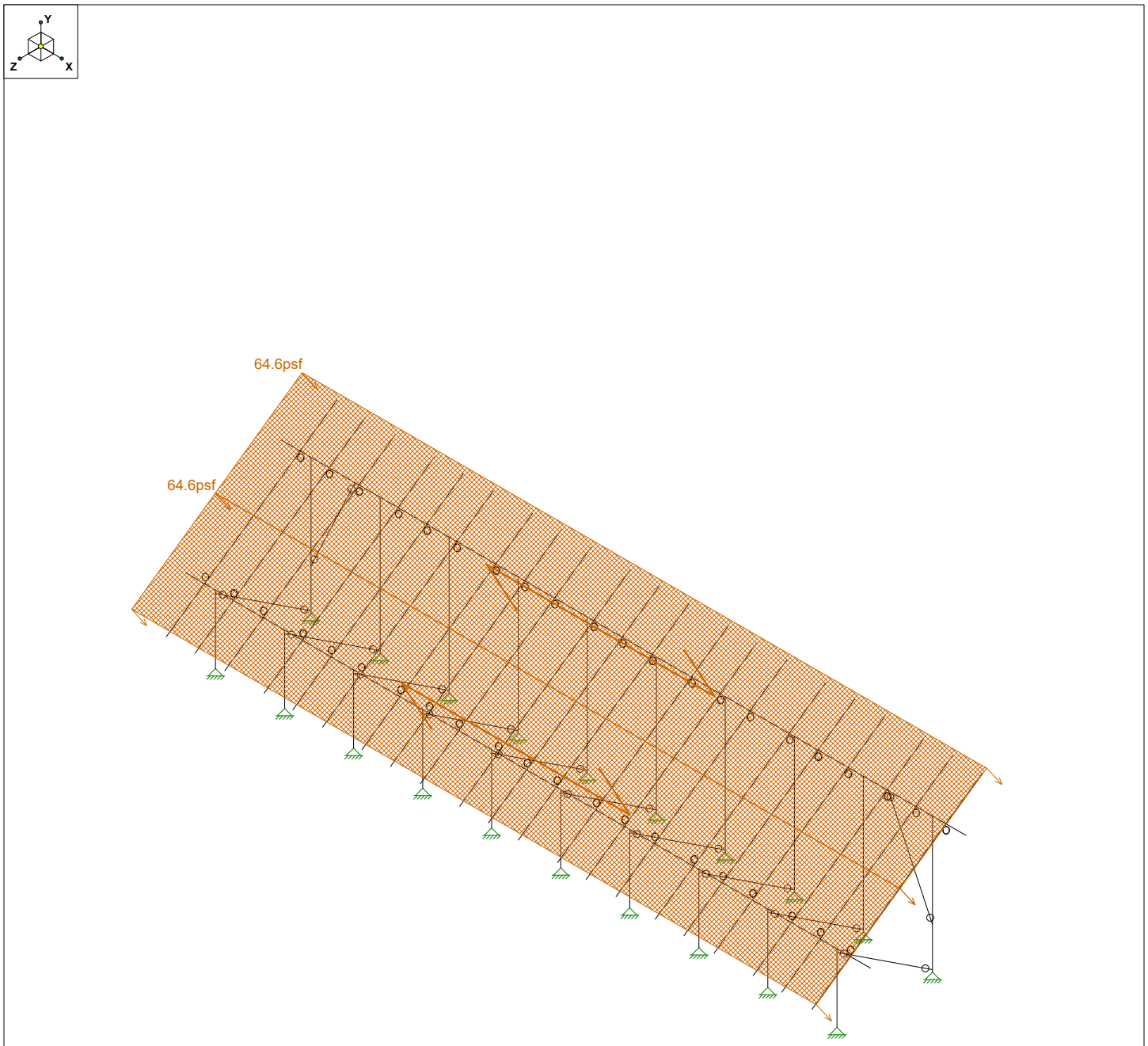

Loads: BLC 6, Wind A 180 deg

Vector Structural Engineeri...		SK - 9
STB	Ground Mount	Mar 30, 2021 at 4:24 PM
U2716.0276.211		Sunmodo Sunturf A9 v3 85x45.r3d

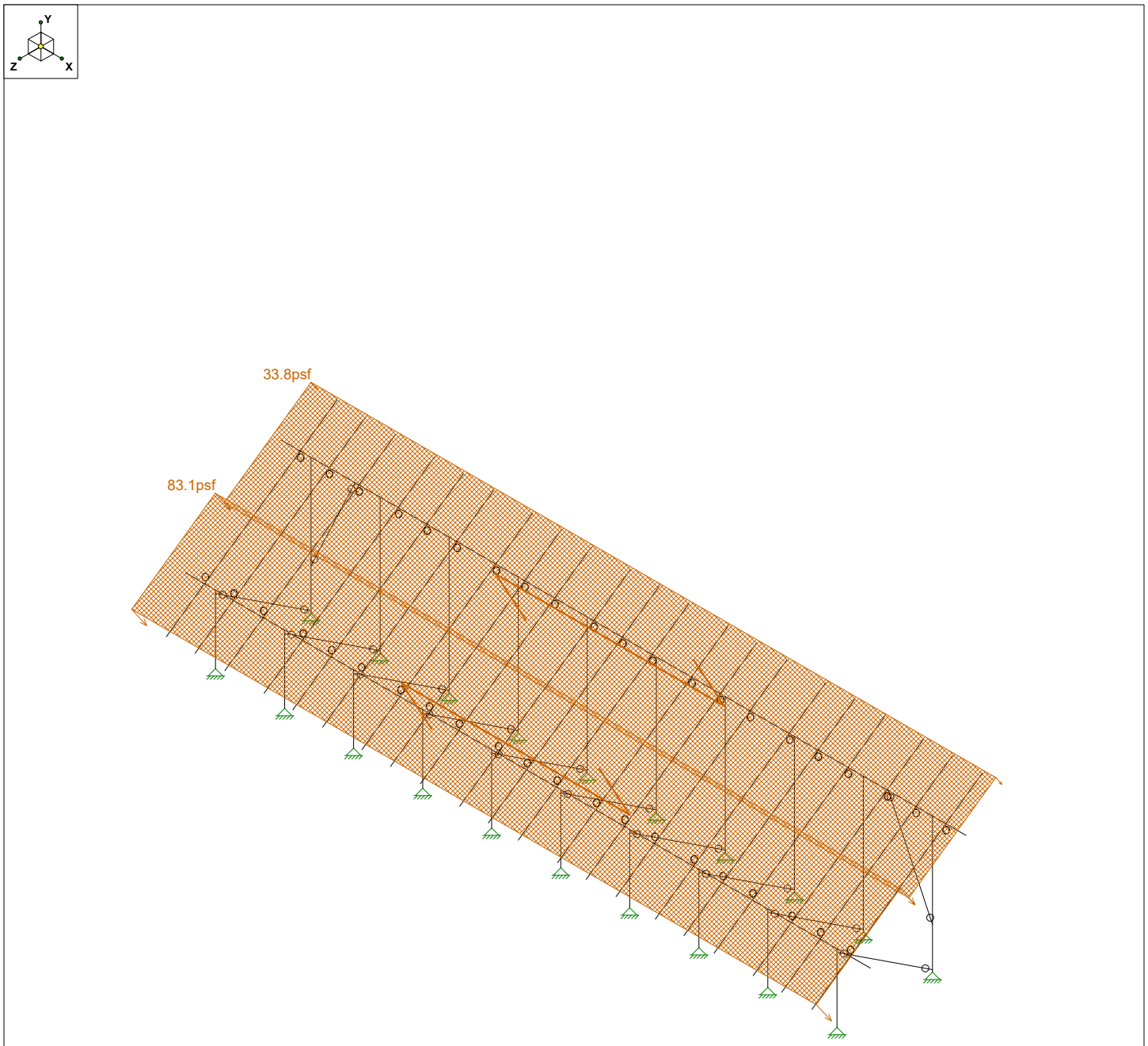

Loads: BLC 7, Wind B 180 deg

Vector Structural Engineeri...		SK - 10
STB	Ground Mount	Mar 30, 2021 at 4:24 PM
U2716.0276.211		Sunmodo Sunturf A9 v3 85x45.r3d

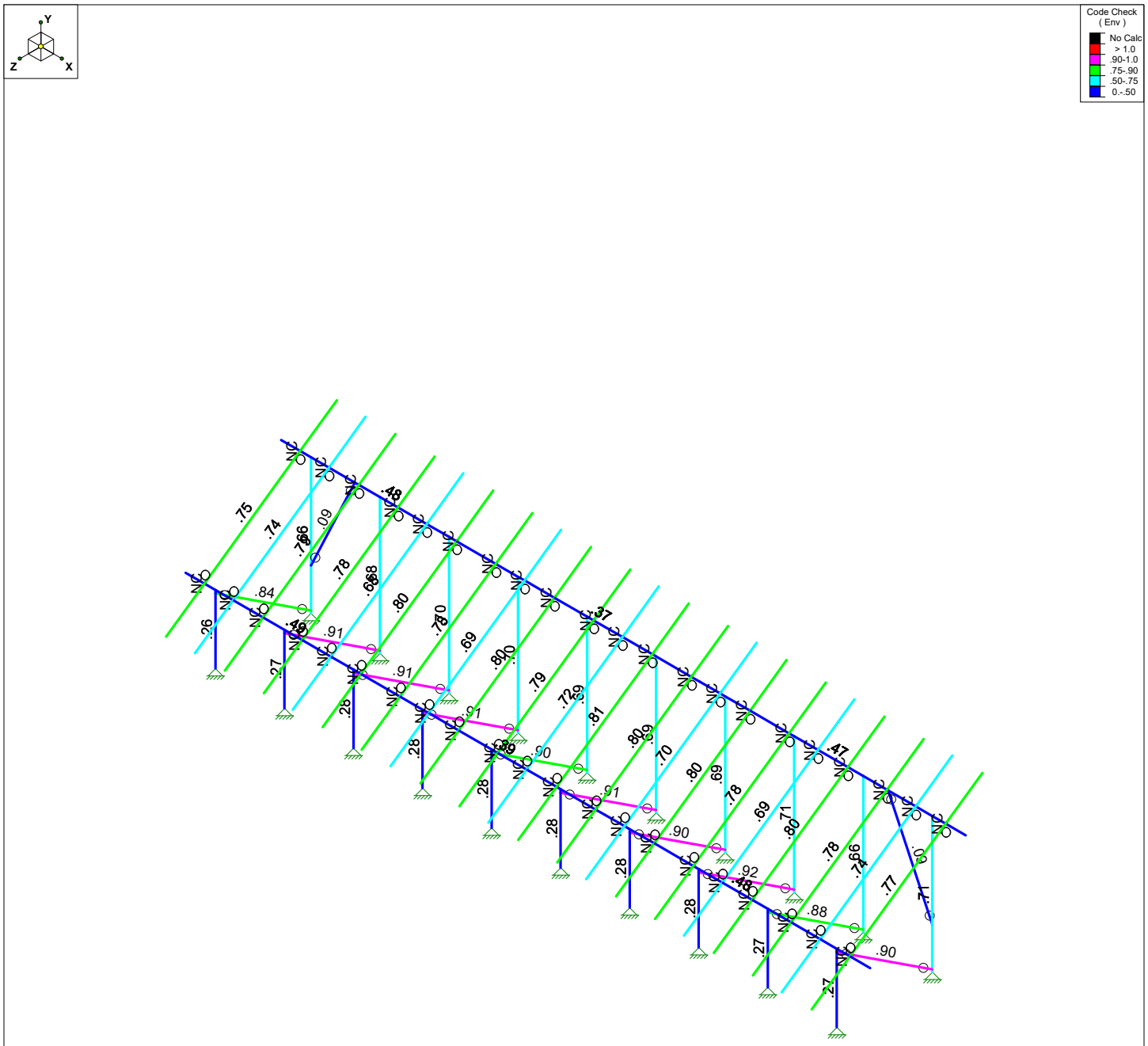

Member Code Checks Displayed (Enveloped)
Envelope Only Solution

Vector Structural Engineeri...		SK - 1
STB	Ground Mount	Mar 30, 2021 at 4:23 PM
U2716.0276.211		Sunmodo Sunturf A9 v3 85x45.r3d

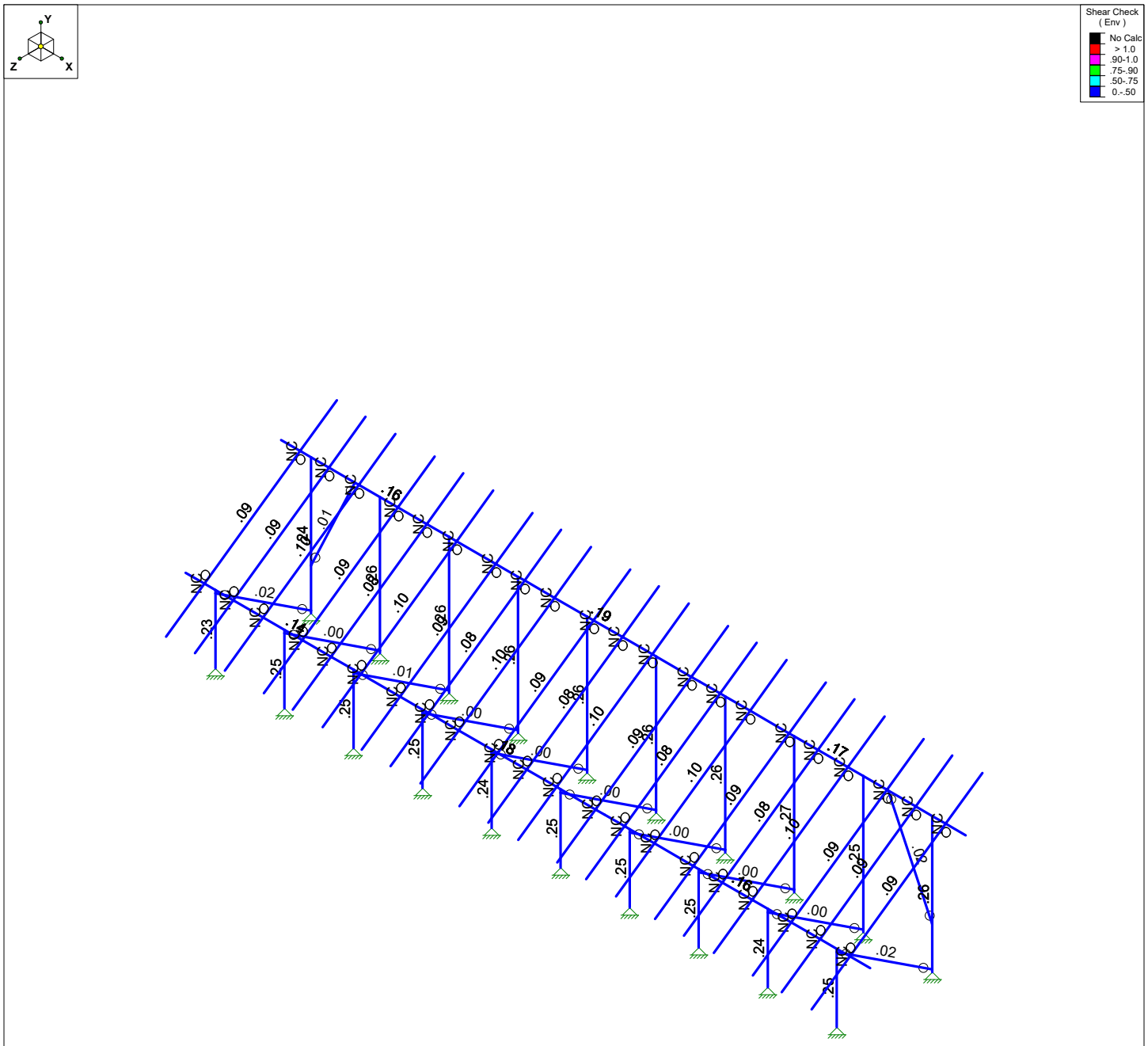

Member Shear Checks Displayed (Enveloped)
Envelope Only Solution

Vector Structural Engineeri...		SK - 2
STB	Ground Mount	Mar 30, 2021 at 4:23 PM
U2716.0276.211		Sunmodo Sunturf A9 v3 85x45.r3d

(Global) Model Settings

Display Sections for Member Calcs	5
Max Internal Sections for Member Calcs	97
Include Shear Deformation?	Yes
Increase Nailing Capacity for Wind?	Yes
Include Warping?	Yes
Trans Load Btwn Intersecting Wood Wall?	Yes
Area Load Mesh (in^2)	144
Merge Tolerance (in)	.12
P-Delta Analysis Tolerance	0.50%
Include P-Delta for Walls?	Yes
Automatically Iterate Stiffness for Walls?	Yes
Max Iterations for Wall Stiffness	3
Gravity Acceleration (in/sec^2)	386.4
Wall Mesh Size (in)	24
Eigensolution Convergence Tol. (1.E-)	4
Vertical Axis	Y
Global Member Orientation Plane	XZ
Static Solver	Sparse Accelerated
Dynamic Solver	Accelerated Solver

Hot Rolled Steel Code	AISC 15th(360-16): ASD
Adjust Stiffness?	Yes(Iterative)
RISAConnection Code	AISC 15th(360-16): ASD
Cold Formed Steel Code	AISI S100-16: ASD
Wood Code	AWC NDS-18: ASD
Wood Temperature	< 100F
Concrete Code	ACI 318-14
Masonry Code	None
Aluminum Code	AA ADM1-15: ASD - Building
Stainless Steel Code	AISC 14th(360-10): ASD
Adjust Stiffness?	Yes(Iterative)

Number of Shear Regions	4
Region Spacing Increment (in)	4
Biaxial Column Method	Exact Integration
Parme Beta Factor (PCA)	.65
Concrete Stress Block	Rectangular
Use Cracked Sections?	Yes
Use Cracked Sections Slab?	No
Bad Framing Warnings?	No
Unused Force Warnings?	Yes
Min 1 Bar Diam. Spacing?	No
Concrete Rebar Set	REBAR_SET_ASTMA615
Min % Steel for Column	1
Max % Steel for Column	8

(Global) Model Settings, Continued

Seismic Code	ASCE 7-16
Seismic Base Elevation (in)	15600
Add Base Weight?	Yes
Ct X	.02
Ct Z	.02
T X (sec)	Not Entered
T Z (sec)	Not Entered
R X	3
R Z	3
Ct Exp. X	.75
Ct Exp. Z	.75
SD1	1
SDS	1
S1	1
TL (sec)	5
Risk Cat	I or II
Drift Cat	Other
Om Z	1
Om X	1
Cd Z	4
Cd X	4
Rho Z	1
Rho X	1

Hot Rolled Steel Properties

	Label	E [ksi]	G [ksi]	Nu	Therm (/1E5 F)	Density[lb/ft^3]	Yield[psi]	Ry	Fu[psi]	Rt
1	A992	29000	11154	.3	.65	490	50000	1.1	65000	1.1
2	A36 Gr.36	29000	11154	.3	.65	490	36000	1.5	58000	1.2
3	A572 Gr.50	29000	11154	.3	.65	490	50000	1.1	65000	1.1
4	A500 Gr.B R...	29000	11154	.3	.65	527	42000	1.4	58000	1.3
5	A500 Gr.B Re...	29000	11154	.3	.65	527	46000	1.4	58000	1.3
6	A53 Gr.B	29000	11154	.3	.65	490	35000	1.6	60000	1.2
7	A1085	29000	11154	.3	.65	490	50000	1.4	65000	1.3

Aluminum Properties

	Label	E [ksi]	G [ksi]	Nu	Therm (...	Density[...	Table B.4	kt	Ftu[psi]	Fty[psi]	Fcy[psi]	Fsu[psi]	Ct
1	3003-H14	10100	3787.5	.33	1.3	172.8	Table B.4-1	1	19000	16000	13000	12000	141
2	6061-T6	10100	3787.5	.33	1.3	172.8	Table B.4-2	1	38000	35000	35000	24000	141
3	6063-T5	10100	3787.5	.33	1.3	172.8	Table B.4-2	1	22000	16000	16000	13000	141
4	6063-T6	10100	3787.5	.33	1.3	172.8	Table B.4-2	1	30000	25000	25000	19000	141
5	5052-H34	10200	3787.5	.33	1.3	172.8	Table B.4-1	1	34000	26000	24000	20000	141
6	6061-T6 W	10100	3787.5	.33	1.3	172.8	Table B.4-1	1	24000	15000	15000	15000	141
7	6005-T5	10100	3787.5	.33	1.3	172.8	Table B.4-1	1	38000	35000	35000	24000	141

Hot Rolled Steel Section Sets

	Label	Shape	Type	Design List	Material	Design R...	A [in2]	Iyy [in4]	Izz [in4]	J [in4]
1	Post	Pipe 2.0 A21165	Column	Pipe	A572 Gr.50	Typical	.776	.499	.499	.998
2	Cross Beam	Pipe 2.5 A21168	Beam	Wide Flange	A572 Gr.50	Typical	.947	.907	.907	1.814
3	Diagonal Brace	1.5x1.5x0.083	HBrace	SquareTube	A572 Gr.50	Typical	.47	.158	.158	.236

Aluminum Section Sets

	Label	Shape	Type	Design List	Material	Design R...	A [in2]	Iyy [in4]	Izz [in4]	J [in4]
1	AL Posts	2.375ODX0.188	Column	Pipe	6005-T5	Typical	1.29	.778	.778	1.54
2	AL Brace	RT1.5x2x0.15625	VBrace	Rectangular Tubes	6005-T5	Typical	.996	.327	.524	.602
3	AL Rails	HR300	Beam	Rectangular Tubes	6005-T5	Typical	.74	.253	.727	.578
4	AL Cross Beam	Cross Rail	Beam	Rectangular Tubes	6005-T5	Typical	1.909	1.97	4.366	4.017

Member Area Loads (BLC 2 : Solar Panel Weight)

	Joint A	Joint B	Joint C	Joint D	Direction	Distribution	Magnitude[psf]
1	N197	N200	N199	N196	Y	A-B	-3

Member Area Loads (BLC 3 : Roof Live/Snow)

	Joint A	Joint B	Joint C	Joint D	Direction	Distribution	Magnitude[psf]
1	N197	N200	N199	N196	PY	A-B	-27

Member Area Loads (BLC 4 : Wind A 0 deg)

	Joint A	Joint B	Joint C	Joint D	Direction	Distribution	Magnitude[psf]
1	N197	N200	N201	N198	Perp	A-B	-55.4
2	N198	N201	N199	N196	Perp	A-B	-55.4

Member Area Loads (BLC 5 : Wind B 0 deg)

	Joint A	Joint B	Joint C	Joint D	Direction	Distribution	Magnitude[psf]
1	N197	N200	N201	N198	Perp	A-B	-73.8
2	N198	N201	N199	N196	Perp	A-B	-18.5

Member Area Loads (BLC 6 : Wind A 180 deg)

	Joint A	Joint B	Joint C	Joint D	Direction	Distribution	Magnitude[psf]
1	N197	N200	N201	N198	Perp	A-B	64.6
2	N198	N201	N199	N196	Perp	A-B	64.6

Member Area Loads (BLC 7 : Wind B 180 deg)

	Joint A	Joint B	Joint C	Joint D	Direction	Distribution	Magnitude[psf]
1	N197	N200	N201	N198	Perp	A-B	33.8
2	N198	N201	N199	N196	Perp	A-B	83.1

Basic Load Cases

	BLC Description	Category	X Gravity	Y Gravity	Z Gravity	Joint	Point	Distributed	Area(M...	Surface...
1	Self Weight	DL		-1.05						
2	Solar Panel Weight	DL							1	
3	Roof Live/Snow	RLL							1	
4	Wind A 0 deg	OL1							2	
5	Wind B 0 deg	OL2							2	
6	Wind A 180 deg	OL3							2	
7	Wind B 180 deg	OL4							2	
8	BLC 2 Transient Area ...	None						45		
9	BLC 3 Transient Area ...	None						45		
10	BLC 4 Transient Area ...	None						148		
11	BLC 5 Transient Area ...	None						148		
12	BLC 6 Transient Area ...	None						148		
13	BLC 7 Transient Area ...	None						148		

Load Combinations

	Description	S...	PD...	SRSS	BLC	Fa...	BLC	Fa...	BLC	Fa...	B...	Fa...	B...	Fa...	B...	Fa...	B...	Fa...	B...	Fa...	B...	Fa...	B...	Fa...
1	1.0 D	Yes	Y		DL	1																		
2	1.0 D + 1.0 S	Yes	Y		DL	1	RLL	1																
3	1.0 D + 0.6 W1	Yes	Y		DL	1	RLL		OL1	.6														
4	1.0 D + 0.6 W2	Yes	Y		DL	1	RLL		OL2	.6														
5	1.0 D + 0.6 W3	Yes	Y		DL	1	RLL		OL3	.6														
6	1.0 D + 0.6 W4	Yes	Y		DL	1	RLL		OL4	.6														
7	1.0 D + 0.45 W1 + 0....	Yes	Y		DL	1	RLL	.75	OL1	.45														
8	1.0 D + 0.45 W2 + 0....	Yes	Y		DL	1	RLL	.75	OL2	.45														
9	1.0 D + 0.45 W3 + 0....	Yes	Y		DL	1	RLL	.75	OL3	.45														
10	1.0 D + 0.45 W4 + 0....	Yes	Y		DL	1	RLL	.75	OL4	.45														
11	0.6 D + 0.6 W1	Yes	Y		DL	.6	RLL		OL1	.6														
12	0.6 D + 0.6 W2	Yes	Y		DL	.6	RLL		OL2	.6														
13	0.6 D + 0.6 W3	Yes	Y		DL	.6	RLL		OL3	.6														
14	0.6 D + 0.6 W4	Yes	Y		DL	.6	RLL		OL4	.6														

Envelope Joint Reactions

	Joint		X [lb]	LC	Y [lb]	LC	Z [lb]	LC	MX [lb-ft]	LC	MY [lb...	LC	MZ [lb-ft]	LC
1	N2	max	12.568	10	1496.493	8	63.072	3	0	14	0	14	0	14
2		min	-4.855	11	-413.767	13	-73.023	5	0	1	0	1	0	1
3	N1	max	44.107	9	2967.081	5	1619.3...	5	0	14	0	14	0	14
4		min	-53.957	12	-2591.175	12	-1389....	3	0	1	0	1	0	1
5	N132	max	3.042	9	3095.966	5	1738.3...	5	0	14	0	14	0	14
6		min	-2.142	12	-2670.541	12	-1491....	3	0	1	0	1	0	1
7	N133	max	5.47	10	1599.84	8	66.3	3	0	14	0	14	0	14
8		min	-.666	11	-440.937	13	-76.896	5	0	1	0	1	0	1
9	N109	max	.913	5	3050.482	5	1756.4...	5	0	14	0	14	0	14
10		min	-.754	12	-2575.923	12	-1504....	3	0	1	0	1	0	1
11	N110A	max	.791	11	1617.082	8	65.491	3	0	14	0	14	0	14
12		min	-2.317	10	-439.444	13	-76.136	5	0	1	0	1	0	1
13	N121	max	1.118	12	3163.052	5	1772.5...	5	0	14	0	14	0	14
14		min	-.686	2	-2749.382	12	-1522....	3	0	1	0	1	0	1
15	N122	max	3.575	11	1648.663	8	66.694	3	0	14	0	14	0	14
16		min	-5.646	10	-482.447	13	-77.233	5	0	1	0	1	0	1
17	N133B	max	1.737	9	3140.706	5	1760.4...	5	0	14	0	14	0	14
18		min	-1.061	12	-2715.068	12	-1509....	3	0	1	0	1	0	1
19	N134B	max	2.87	8	1633.422	8	66.638	3	0	14	0	14	0	14
20		min	-1.294	13	-449.469	13	-77.26	5	0	1	0	1	0	1
21	N151	max	2.576	12	3129.85	5	1760.77	5	0	14	0	14	0	14
22		min	-2.202	9	-2706.307	12	-1510....	3	0	1	0	1	0	1
23	N152	max	2.161	11	1625.234	8	66.614	3	0	14	0	14	0	14
24		min	-8.071	10	-467.267	13	-77.164	5	0	1	0	1	0	1
25	N143A	max	1.656	12	3118.031	5	1746.2...	5	0	14	0	14	0	14
26		min	-1.044	9	-2691.918	12	-1497....	3	0	1	0	1	0	1
27	N144A	max	.279	11	1617.074	8	66.507	3	0	14	0	14	0	14
28		min	-3.9	10	-433.039	13	-77.163	5	0	1	0	1	0	1
29	N149A	max	1.647	9	3181.991	5	1783.31	13	0	14	0	14	0	14
30		min	-.715	12	-2767.013	12	-1531....	3	0	1	0	1	0	1
31	N150A	max	4.35	10	1657.953	8	66.882	3	0	14	0	14	0	14
32		min	-3.247	11	-486.357	13	-77.424	5	0	1	0	1	0	1
33	N155B	max	51.719	12	3201.054	5	1748.41	5	0	14	0	14	0	14
34		min	-42.994	9	-2790.036	12	-1501....	3	0	1	0	1	0	1
35	N156B	max	1.508	13	1613.723	8	66.15	3	0	14	0	14	0	14
36		min	-3.187	12	-451.612	13	-76.429	5	0	1	0	1	0	1
37	N161A	max	2.77	12	2961.195	5	1708.8...	5	0	14	0	14	0	14

Envelope Joint Reactions (Continued)

	Joint		X [lb]	LC	Y [lb]	LC	Z [lb]	LC	MX [lb-ft]	LC	MY [lb...	LC	MZ [lb-ft]	LC
38		min	-1.967	9	-2503.691	12	-1462....	3	0	1	0	1	0	1
39	N162A	max	1.66	11	1575.977	8	65.573	3	0	14	0	14	0	14
40		min	-5.022	10	-424.252	13	-76.367	5	0	1	0	1	0	1
41	Totals:	max	.004	11	33660.577	9	16629....	5						
42		min	-.01	9	-18302.591	11	-1426...	3						

Envelope AISC 15th(360-16): ASD Steel Code Checks

	Member	Shape	Code Check	Loc[in]	LC	Shear ...	Loc[in]	Dir	LC	Pnc/om [...	Pnt/om [lb]	Mnyy/om...	Mnzz/om...	Cb	Eqn
1	M5	Pipe 2.0 A2...	.264	56.574	5	.232	56.574		5	15634.075	23232.186	1397.505	1397.505	1....	H1-1b
2	M6	Pipe 2.0 A2...	.655	1.223	5	.243	0		5	5439	23232.186	1397.505	1397.505	1....	H1-1a
3	M13	Pipe 2.5 A2...	.492	86.25	10	.144	147....		6	11641.036	28358.413	2081.747	2081.747	1....	H1-1b
4	M14	Pipe 2.5 A2...	.481	86.25	9	.157	147....		9	11641.036	28358.413	2081.747	2081.747	1....	H1-1b
5	M15	1.5x1.5x0.083	.838	51.711	5	.023	0	y	9	2408.78	14085.15	624.421	624.421	1....	H1-1a
6	M80	Pipe 2.0 A2...	.276	56.574	5	.245	56.574		5	15634.075	23232.186	1397.505	1397.505	1....	H1-1b
7	M81	Pipe 2.0 A2...	.686	1.223	5	.259	0		5	5439	23232.186	1397.505	1397.505	1....	H1-1a
8	M82	1.5x1.5x0.083	.897	51.711	5	.004	99.285	y	8	2408.78	14085.15	624.421	624.421	1....	H1-1a
9	M50	Pipe 2.0 A2...	.274	56.574	5	.248	56.574		5	15634.075	23232.186	1397.505	1397.505	1....	H1-1b
10	M51	Pipe 2.0 A2...	.679	1.223	5	.262	0		5	5439	23232.186	1397.505	1397.505	1....	H1-1a
11	M52	1.5x1.5x0.083	.906	51.711	5	.002	0	y	5	2408.78	14085.15	624.421	624.421	1....	H1-1a
12	M56A	Pipe 2.0 A2...	.278	56.574	5	.251	56.574		5	15634.075	23232.186	1397.505	1397.505	1....	H1-1b
13	M57A	Pipe 2.0 A2...	.701	1.223	5	.264	0		5	5439	23232.186	1397.505	1397.505	1....	H1-1a
14	M58A	1.5x1.5x0.083	.915	51.711	5	.006	0	y	5	2408.78	14085.15	624.421	624.421	1....	H1-1a
15	M68	Pipe 2.0 A2...	.278	56.574	5	.248	56.574		5	15634.075	23232.186	1397.505	1397.505	1....	H1-1b
16	M69	Pipe 2.0 A2...	.696	1.223	5	.262	0		5	5439	23232.186	1397.505	1397.505	1....	H1-1a
17	M70	1.5x1.5x0.083	.908	51.711	5	.003	99.285	y	8	2408.78	14085.15	624.421	624.421	1....	H1-1a
18	M68A	Pipe 2.5 A2...	.393	82.5	10	.177	140....		6	11641.036	28358.413	2081.747	2081.747	2....	H1-1b
19	M69A	Pipe 2.5 A2...	.478	141....	10	.158	21.656		6	11641.036	28358.413	2081.747	2081.747	2....	H1-1b
20	M70A	Pipe 2.5 A2...	.374	82.5	9	.192	140....		9	11641.036	28358.413	2081.747	2081.747	2....	H1-1b
21	M71	Pipe 2.5 A2...	.470	202....	9	.173	21.656		9	11641.036	28358.413	2081.747	2081.747	2....	H1-1b
22	M73	Pipe 2.0 A2...	.277	56.574	5	.248	56.574		5	15634.075	23232.186	1397.505	1397.505	1....	H1-1b
23	M74	Pipe 2.0 A2...	.694	1.223	5	.262	0		5	5439	23232.186	1397.505	1397.505	1....	H1-1a
24	M75	1.5x1.5x0.083	.909	51.711	5	.004	0	y	10	2408.78	14085.15	624.421	624.421	1....	H1-1a
25	M69C	Pipe 2.0 A2...	.278	56.574	5	.246	56.574		5	15634.075	23232.186	1397.505	1397.505	1....	H1-1b
26	M70C	Pipe 2.0 A2...	.691	1.223	5	.260	0		5	5439	23232.186	1397.505	1397.505	1....	H1-1a
27	M71B	1.5x1.5x0.083	.901	51.711	5	.003	0	y	8	2408.78	14085.15	624.421	624.421	1....	H1-1a
28	M72A	Pipe 2.0 A2...	.278	56.574	5	.252	56.574		5	15634.075	23232.186	1397.505	1397.505	1....	H1-1b
29	M73A	Pipe 2.0 A2...	.705	1.223	5	.266	0		5	5439	23232.186	1397.505	1397.505	1....	H1-1a
30	M74A	1.5x1.5x0.083	.920	51.711	5	.005	99.285	y	5	2408.78	14085.15	624.421	624.421	1....	H1-1a
31	M75B	Pipe 2.0 A2...	.275	56.574	5	.250	56.574		5	15634.075	23232.186	1397.505	1397.505	1....	H1-1b
32	M76	Pipe 2.0 A2...	.707	1.223	5	.263	0		5	5439	23232.186	1397.505	1397.505	1....	H1-1a
33	M77	1.5x1.5x0.083	.904	51.711	5	.018	0	y	9	2408.78	14085.15	624.421	624.421	1....	H1-1a
34	M78A	Pipe 2.0 A2...	.275	56.574	5	.240	56.574		5	15634.075	23232.186	1397.505	1397.505	1....	H1-1b
35	M79	Pipe 2.0 A2...	.659	1.223	5	.255	0		5	5439	23232.186	1397.505	1397.505	1....	H1-1a
36	M80A	1.5x1.5x0.083	.882	51.711	5	.003	0	y	2	2408.78	14085.15	624.421	624.421	1....	H1-1a

Envelope AA ADM1-15: ASD - Building Aluminum Code Checks

	Member	Shape	Code C...	Loc[in]	LC	Shear ...	Loc[in]	Dir	LC	Pnc/O...	Pnt/Om...	Mny/O...	Mnz/O...	Vny/O...	Vnz/O...	Cb	Eqn
1	M19	RT1.5x2x...	.087	56.241	9	.011	0	z	5	2073.828	19411....	770.742	927.083	5889.423	3966.346	1....	H.1-1
2	M16	HR300	.754	41.486	10	.092	41.486	y	10	3634.437	14429....	560.361	934.132	5656.689	2605.145	2....	H.1-1
3	M38	HR300	.790	41.486	10	.097	41.486	y	10	3634.437	14429....	560.361	934.132	5656.689	2605.145	2....	H.1-1
4	M41	HR300	.775	41.486	10	.095	41.486	y	10	3634.437	14429....	560.361	934.132	5656.689	2605.145	2....	H.1-1
5	M44	HR300	.796	41.486	10	.096	41.486	y	10	3634.437	14429....	560.361	934.132	5656.689	2605.145	2....	H.1-1
6	M47	HR300	.785	41.486	10	.095	41.486	y	10	3634.437	14429....	560.361	934.132	5656.689	2605.145	2....	H.1-1
7	M50A	HR300	.799	41.486	10	.096	41.486	y	10	3634.437	14429....	560.361	934.132	5656.689	2605.145	2....	H.1-1

Envelope AA ADM1-15: ASD - Building Aluminum Code Checks (Continued)

	Member	Shape	Code C...	Loc[in]	LC	Shear ...	Loc[in]	Dir	LC	Pnc/O...	Pnt/Om...	Mny/O...	Mnz/O...	Vny/O...	Vnz/O...	Cb	Eqn
8	M53	HR300	.794	141.4...	12	.095	41.486	y	10	3634.437	14429....	560.361	934.132	5656.689	2605.145	1....	H.1-1
9	M56	HR300	.814	141.4...	12	.096	41.486	y	10	3634.437	14429....	560.361	934.132	5656.689	2605.145	1....	H.1-1
10	M59	HR300	.802	41.486	10	.094	41.486	y	10	3634.437	14429....	560.361	934.132	5656.689	2605.145	2....	H.1-1
11	M62	HR300	.799	41.486	10	.096	41.486	y	10	3634.437	14429....	560.361	934.132	5656.689	2605.145	2....	H.1-1
12	M65	HR300	.783	41.486	10	.094	41.486	y	10	3634.437	14429....	560.361	934.132	5656.689	2605.145	2....	H.1-1
13	M68B	HR300	.797	41.486	10	.096	41.486	y	10	3634.437	14429....	560.361	934.132	5656.689	2605.145	2....	H.1-1
14	M71A	HR300	.779	41.486	10	.095	41.486	y	10	3634.437	14429....	560.361	934.132	5656.689	2605.145	2....	H.1-1
15	M74B	HR300	.770	41.486	10	.094	41.486	y	10	3634.437	14429....	560.361	934.132	5656.689	2605.145	2....	H.1-1
16	M78	RT1.5x2x...	.093	56.308	9	.016	0	z	5	2068.941	19411....	770.742	927.083	5889.423	3966.346	1....	H.1-1
17	M83	HR300	.739	41.486	6	.088	41.486	y	10	3634.437	14429....	560.361	934.132	5656.689	2605.145	2....	H.1-1
18	M86	HR300	.679	41.486	10	.082	41.486	y	10	3634.437	14429....	560.361	934.132	5656.689	2605.145	2....	H.1-1
19	M89	HR300	.688	141.4...	12	.082	41.486	y	10	3634.437	14429....	560.361	934.132	5656.689	2605.145	1....	H.1-1
20	M92	HR300	.719	41.486	10	.082	41.486	y	10	3634.437	14429....	560.361	934.132	5656.689	2605.145	2....	H.1-1
21	M95	HR300	.704	141.4...	12	.082	41.486	y	10	3634.437	14429....	560.361	934.132	5656.689	2605.145	1....	H.1-1
22	M98	HR300	.694	41.486	10	.082	41.486	y	10	3634.437	14429....	560.361	934.132	5656.689	2605.145	2....	H.1-1
23	M101	HR300	.737	41.486	6	.087	41.486	y	10	3634.437	14429....	560.361	934.132	5656.689	2605.145	2....	H.1-1

REVISIONS			
REV	DESCRIPTION	BY	DATE
A	INITIAL RELEASE	LWF	10/20/2016

NOTES: UNLESS OTHERWISE SPECIFIED

1. DIMENSIONS SHOWN ARE INCHES [MILIMETERS].

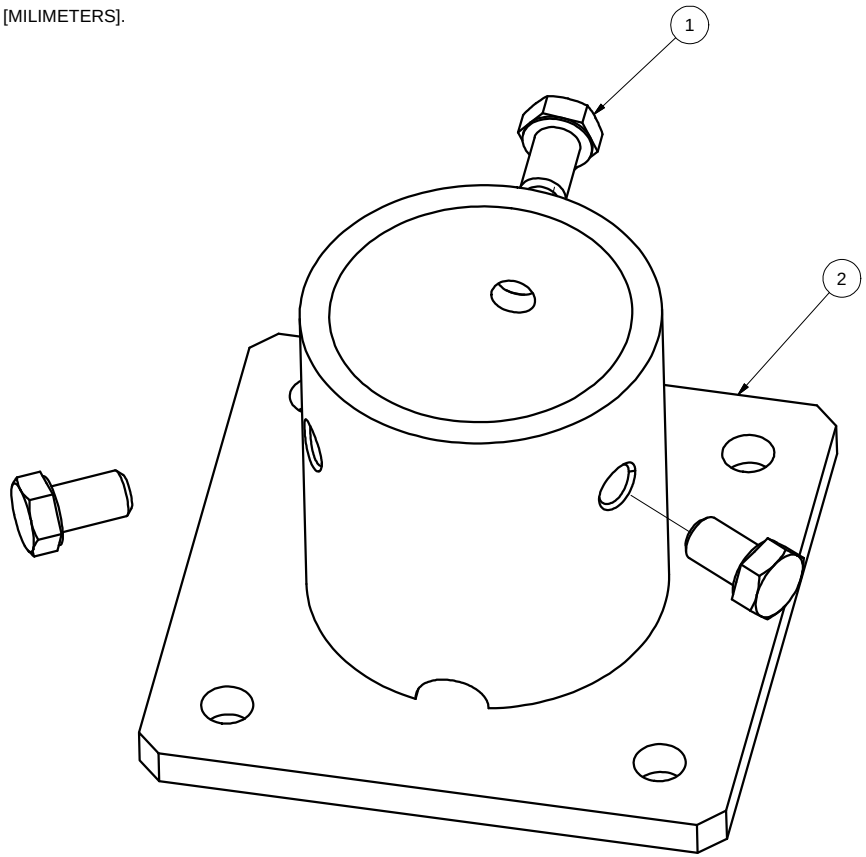

ITEM	PART NUMBER	DESCRIPTION	QTY
2	A21120-001	2" PIPE BASE	1
1	B15018-011	HEX CAP SCREW 3/8-16 X 5/8	3

MATERIAL: SEE NOTES

Third Angle Projection:

GENERAL SPECIFICATIONS
All Dimensions in inches [millimeters]
Tolerances
X.XXX ±0.01 [0.25mm]
X.XX ±0.02 [0.50mm]
X.X ±0.039 [1.0mm]
Unless otherwise spec'd

Break all sharp edges .010-.020 unless otherwise specified.

DRAWN BY: LWF
DATE: 10/20/2016
CHECKED BY:
APPROVALS:

Sunmodo Corp.

1905 E 5TH STREET, STE A, VANCOUVER, WA 98661

TITLE: 2" PIPE BASE KIT

B — DRAWING NUMBER: K10268-001

SCALE: NONE — SHEET 1 of 1

NOTES: UNLESS OTHERWISE SPECIFIED

1. DIMENSIONS SHOWN ARE INCHES [MILIMETERS].
2. MATERAIL: ALUMINUM 6005-T5.
   FINISH: CLEAR ANODIZED 10 µm THICK.
3. THE UNSPECIFIED DIMENSIONS ARE SPECIFIED BY 2D CAD FILE.

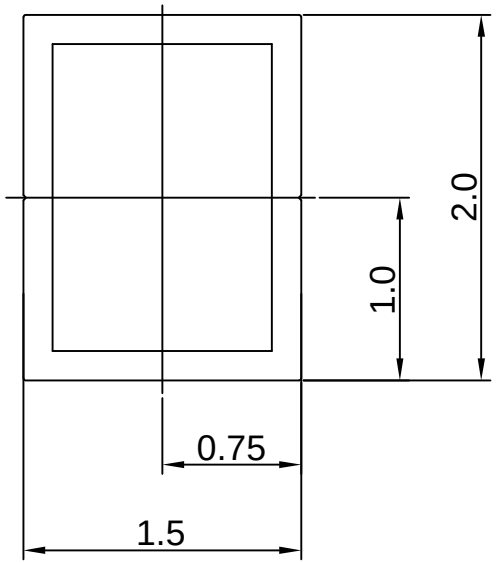

Section properties:

Weight: 1.156 lbs/ft
Area: 0.992 in^2
Perimeter: 12.601 in
Bounding Box: X: -1.000,1.000
Y: -0.750, 0.750
Centroid:(0.000,0.000)
Moments of Inertia(in^4): Ix=0.506,Iy=0.322
Section modulus in bending(in^3): Wx=0.675,Wy=0.322
Radii of Gyration: X: 0.714, Y: 0.570

MATERIAL SEE NOTES		**Sunmodo Corp.**
Third Angle Projection:		1905 E 5TH STREET, SUITE A, VANCOUVER, WA 98661
GENERAL SPECIFICATIONS All Dimensions in inches [millimeters] Tolerances X.XXX ± 0.01 [0.25mm] X.XX ± 0.02 [0.50mm] X.X ± 0.039 [1.0mm] Unless otherwise spec'd	Break all sharp edges .010-.020 unless otherwise specified.	TITLE 1.5X2 AL TUBE BRACE EXTRUSION
DRAWN BY zcg	DATE 03/12/2014	B — DRAWING NUMBER A20164
CHECKED BY		
APPROVALS		SCALE: NONE — SHEET 1 of 1

REVISIONS			
REV	DESCRIPTON	BY	DATE
A	ADDED BOTTOM CHANNEL & CHANGED ONE 3/8 CHANNEL TO 1/4	zcg	02/21/2013

NOTES: UNLESS OTHERWISE SPECIFIED

1. DIMENSIONS SHOWN ARE INCHES [MILIMETERS].
2. MATERAIL: ALUMINUM 6005-T5.
   FINISH: CLEAR ANODIZED 15 µm THICK.
3. THE UNSPECIFIED DIMENSIONS ARE SPECIFIED BY 2D CAD FILE.

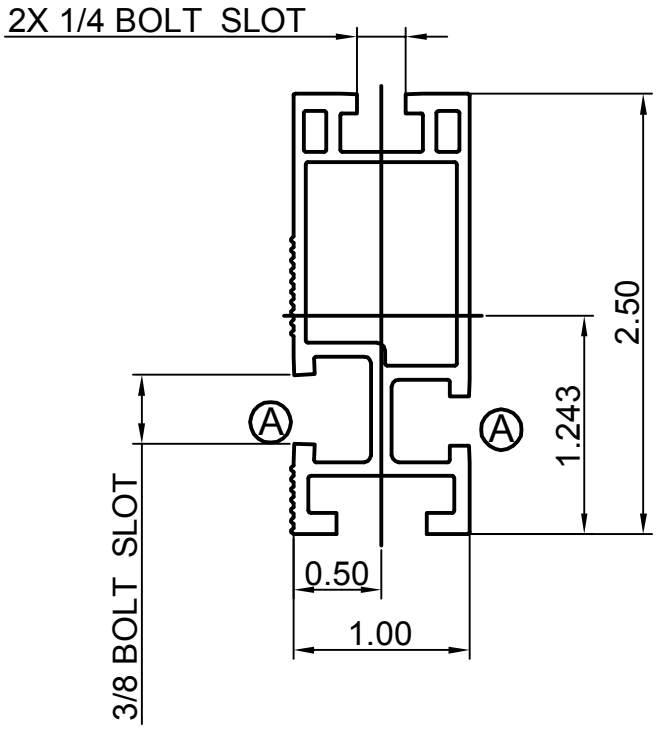

Section properties:

Weight: 0.850 lbs/ft
Area: 0.723 in^2
Perimeter: 17.325 in
Bounding Box: X: -0.500,0.500
Y: -1.243,1.257
Centroid:(0.000,0.000)
Moments of Incertia(in^4): Ix=0.486,Iy=0.095
Section modulus in bending(in^3): Wx=0.387,Wy=0.190
Radii of Gyration: X: 0.820, Y: 0.363

MATERIAL SEE NOTES	**Sunmodo Corp.**	
Third Angle Projection:	1905 E 5TH STREET, SUITE A, VANCOUVER, WA 98661	
GENERAL SPECIFICATIONS All Dimensions in inches [millimeters] Tolerances X.XXX ± 0.01 [0.25mm] X.XX ± 0.02 [0.50mm] X.X ± 0.039 [1.0mm] Unless otherwise spec'd — Break all sharp edges .010-.020 unless otherwise specified.	TITLE HELIO STANDARD RAIL	
DRAWN BY zcg — DATE 02/21/2013	B — DRAWING NUMBER A20144	
CHECKED BY		
APPROVALS	SCALE: NONE	SHEET 1 of 1

NOTES: UNLESS OTHERWISE SPECIFIED

1. DIMENSIONS SHOWN ARE INCHES [MILIMETERS].
2. MATERIAL: 6005-T5.
   FINISH: CLEAR ANODIZED 10um THICK.
3. THE UNSPECIFIED RADII ARE .02" MAX.
4. THE UNSPECIFIED DIMENSIONS ARE SPECIFIED BY 2D CAD FILE.

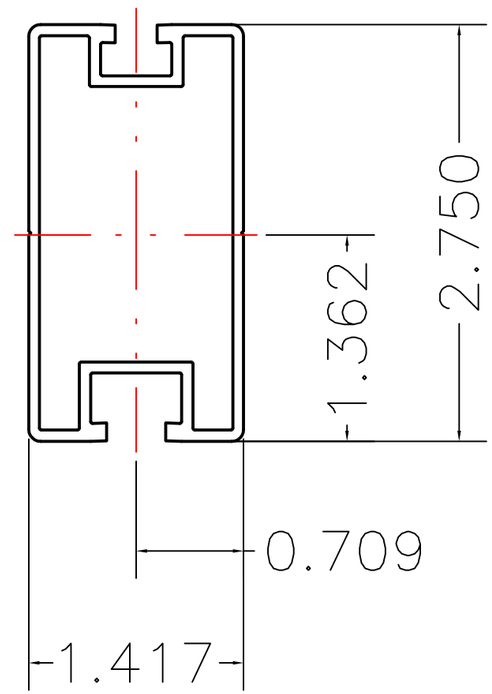

Section properties:

Weight: 0.862 lbs/ft
Area: 0.736 in^2
Perimeter: 19.824 in
Bounding Box: X: -0.709,0.709
Y: -1.362,1.388
Centroid:(0.000,0.000)
Moments of Incertia(in^4): Ix=0.727,Iy=0.214
Section modulus in bending(in^3): Wx=0.524,Wy=0.302
Radii of Gyration: X: 994, Y: 0.539

MATERIAL SEE NOTES		**SunModo Corp.** 14800 NE 65TH STREET, VANCOUVER WA 98682
Third Angle Projection:		
GENERAL SPECIFICATIONS All Dimensions in Inches [millimeters] Tolerances X.XXX ±0.01 [0.25mm] X.XX ±0.02 [0.50mm] X.X ±0.039 [1.0mm] Unless otherwise spec'd	Break all sharp edges .010-.020 unless otherwise specified.	TITLE RAIL, HR300 (SUNRAY), EXTRUSION
DRAWN BY KYY	DATE 01/18/2018	
CHECKED BY		B — DRAWING NUMBER A20288
APPROVALS		SCALE: NONE — SHEET 1 of 1

REV	DESCRIPTON	BY	DATE
A	0.44 WAS 0.41, 0.44 WAS 0.33	LWF	11/30/2015

NOTES: UNLESS OTHERWISE SPECIFIED

1. DIMENSIONS SHOWN ARE INCHES [MILIMETERS].
2. MATERAIL: ALUMINUM 6005-T5.
   FINISH: CLEAR ANODIZED 15 µm THICK.
3. THE UNSPECIFIED DIMENSIONS ARE SPECIFIED BY 2D CAD FILE.

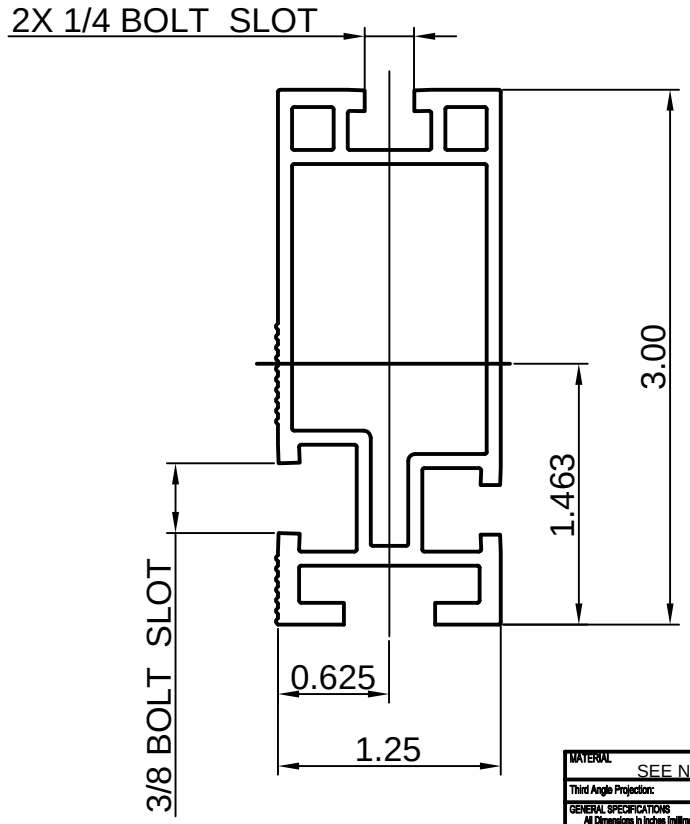

Section properties:

Weight: 1.151 lbs/ft
Area: 0.980 in^2
Perimeter: 22.104 in
Bounding Box: X: -0.625,0.625
Y: -1.463,1.537
Centroid:(0.000,0.000)
Moments of Inertia(in^4): Ix=1.047,Iy=0.207
Section modulus in bending(in^3): Wx=0.681,Wy=0.331
Radii of Gyration: X: 1.034, Y: 0.460

MATERIAL: SEE NOTES
Third Angle Projection:
GENERAL SPECIFICATIONS
All Dimensions in Inches [millimeters]
Tolerances
X.XXX ±0.01 [0.25mm]
X.XX ±0.02 [0.50mm]
X.X ±0.039 [1.0mm]
Unless otherwise specf'd
Break all sharp edges .010-.020 unless otherwise specified.
DRAWN BY: zcg
DATE: 02/21/2013
CHECKED BY
APPROVALS

Sunmodo Corp.
1905 E 5TH STREET, SUITE A, VANCOUVER, WA 98661

TITLE: HELIO HEAVY RAIL
B
DRAWING NUMBER: A20145
SCALE: NONE
SHEET 1 of 1

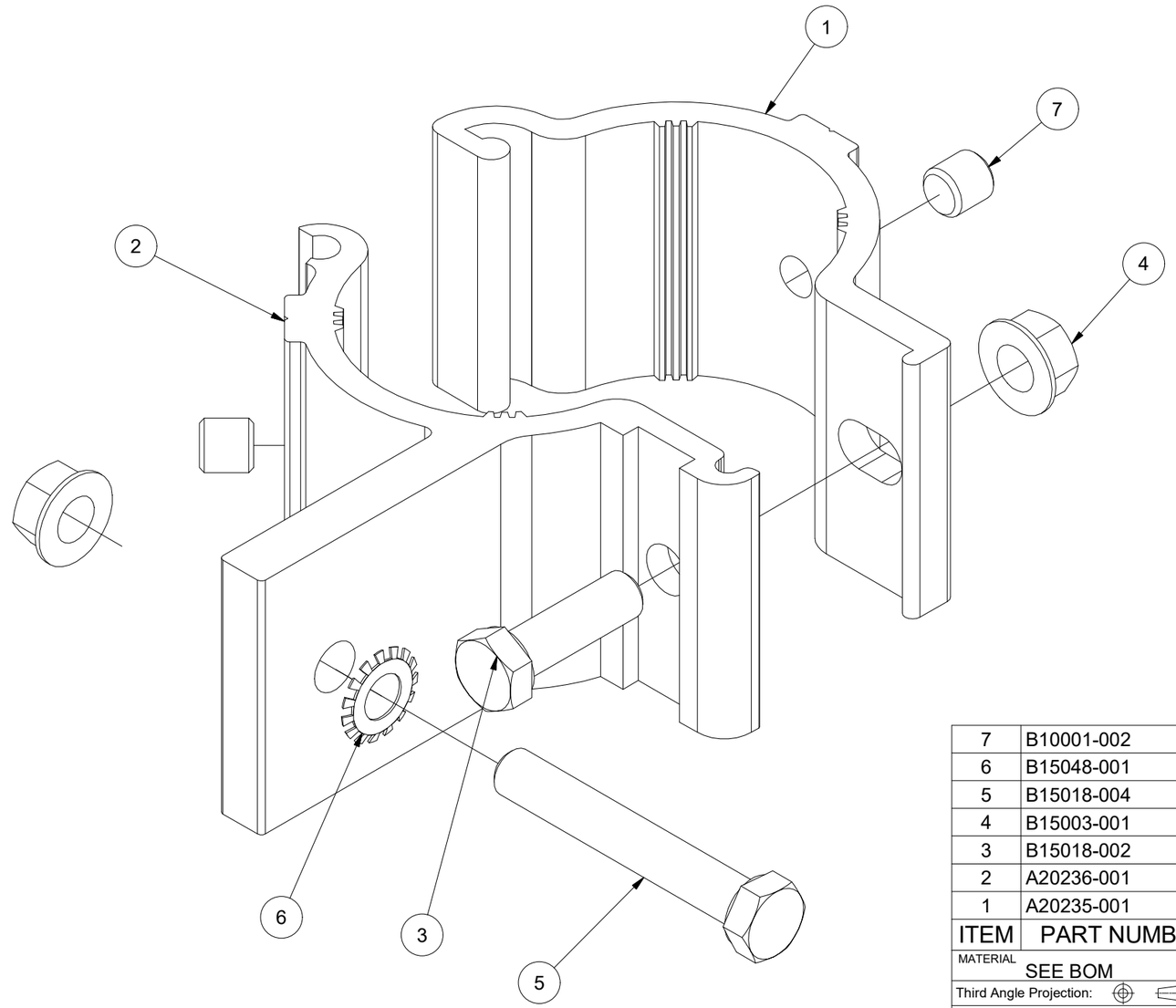

ITEM	PART NUMBER	DESCRIPTION	QTY
7	B10001-002	SET SCREW M10X10	2
6	B15048-001	STAR WASHER FOR 3/8 BOLT	1
5	B15018-004	HEX CAP SCREW 3/8-16 X2.5	1
4	B15003-001	FLANGE NUT 3/8-16	2
3	B15018-002	HEX CAP SCREW 3/8-16 X 1.25	1
2	A20236-001	2 AL PIPE CLAMP, FEMALE	1
1	A20235-001	2 AL PIPE CLAMP, MALE	1

MATERIAL: SEE BOM

Third Angle Projection:

GENERAL SPECIFICATIONS
All Dimensions in inches [millimeters]
Tolerances
X.XXX ±0.01 [0.25mm]
X.XX ±0.02 [0.50mm]
X.X ±0.039 [1.0mm]
Unless otherwise spec'd

Break all sharp edges .010-.020 unless otherwise specified.

DRAWN BY: zcg
DATE: 08/12/2015
CHECKED BY:
APPROVALS:

Sunmodo Corp.

1905 E 5TH STREET, STE A, VANCOUVER, WA 98661

TITLE: 2 AL PIPE CLAMP KIT

B — DRAWING NUMBER: K10219-001

SCALE: NONE — SHEET 1 of 1

REVISIONS			
REV	DESCRIPTION	BY	DATE
A	INITIAL RELEASE	LWF	06/12/2018
B	ADD C10005-006	LWF	06/27/2018

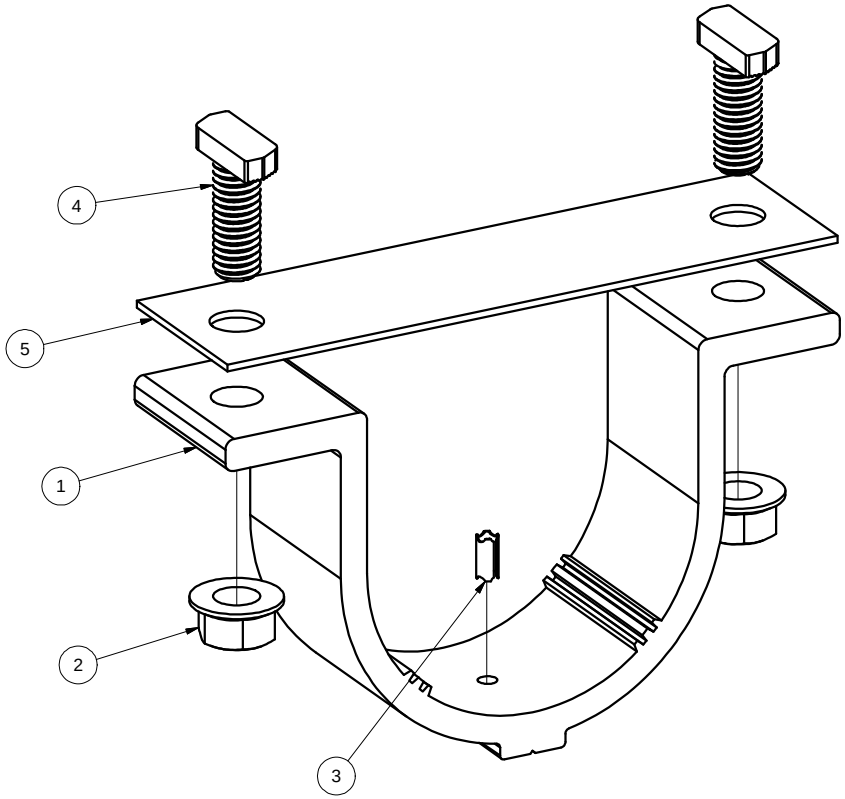

ITEM	PART NUMBER	DESCRIPTION	QTY
5	C10005-006	PVC GASKTE T=1.5mm	1
4	B50033-001	T-BOLT, RAIL BOTTOM SLOT, 3/8-16 X 1"	2
3	B20018-002	GROUNDING PIN	1
2	B15003-001	FLANGE NUT 3/8-16	2
1	A20329-001	2.5" AL PIPE U-BOLT	1

MATERIAL: SEE NOTES

Third Angle Projection:

GENERAL SPECIFICATIONS
All Dimensions in inches [millimeters]
Tolerances
X.XXX ±0.01 [0.25mm]
X.XX ±0.02 [0.50mm]
X.X ±0.039 [1.0mm]
Unless otherwise spec'd

Break all sharp edges .010-.020 unless otherwise specified.

DRAWN BY: KYY
DATE: 06/12/2018
CHECKED BY:
APPROVALS:

SunModo Corp.

14800 NE 65TH STREET, VANCOUVER WA 98682

TITLE: 2.5" AL PIPE U-CLAMP KIT

B

DRAWING NUMBER: K10343-001

SCALE: NONE

SHEET 1 of 1

REVISIONS			
REV	DESCRIPTION	BY	DATE
A	INITIAL RELEASE	zcg	09/25/2015

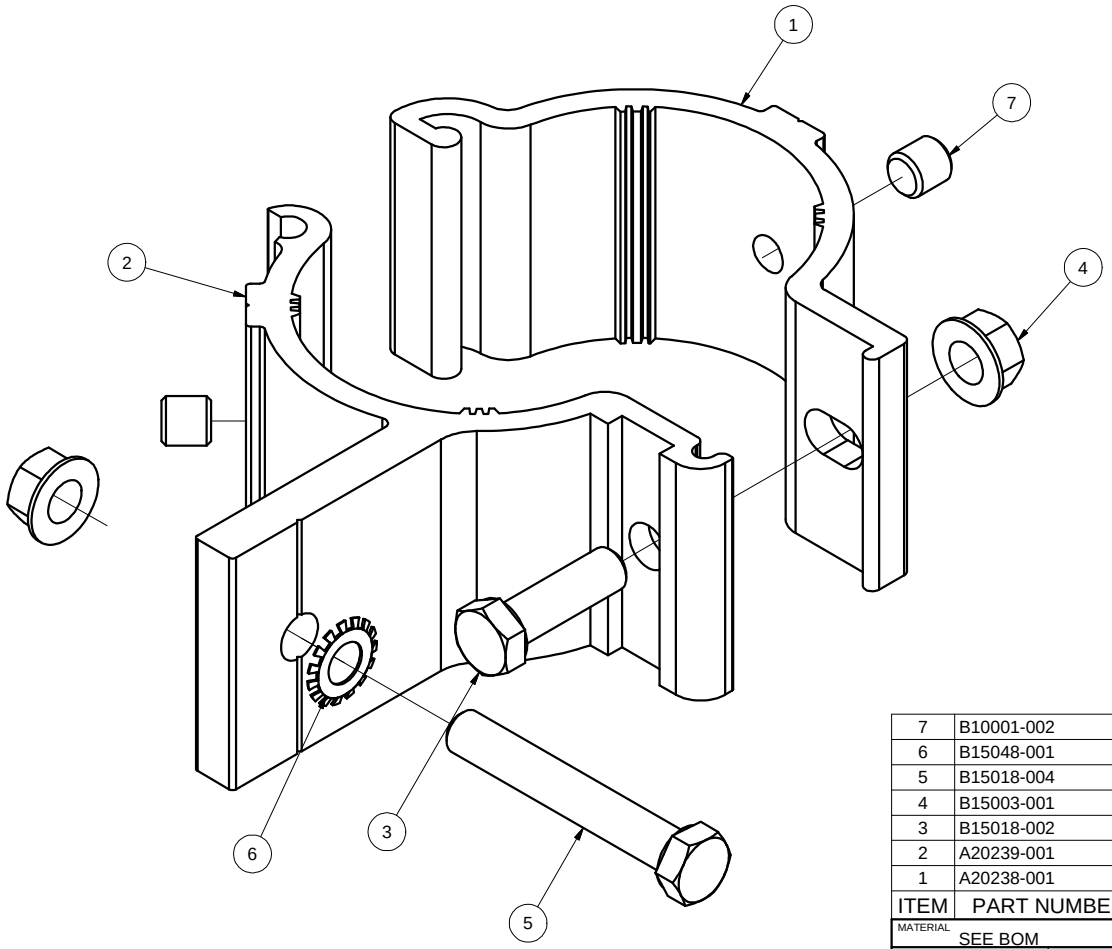

ITEM	PART NUMBER	DESCRIPTION	QTY
7	B10001-002	SET SCREW M10X10	2
6	B15048-001	STAR WASHER FOR 3/8 BOLT	1
5	B15018-004	HEX CAP SCREW 3/8-16 X2.5	1
4	B15003-001	FLANGE NUT 3/8-16	2
3	B15018-002	HEX CAP SCREW 3/8-16 X 1.25	1
2	A20239-001	2.5 AL PIPE CLAMP, FEMALE	1
1	A20238-001	2.5 AL PIPE CLAMP, MALE	1

MATERIAL: SEE BOM

Third Angle Projection:

GENERAL SPECIFICATIONS
All Dimensions in inches [millimeters]
Tolerances
X.XXX ±0.01 [0.25mm]
X.XX ±0.02 [0.50mm]
X.X ±0.039 [1.0mm]
Unless otherwise spec'd

Break all sharp edges .010-.020 unless otherwise specified.

DRAWN BY: LWF
DATE: 08/21/2015
CHECKED BY:
APPROVALS:

Sunmodo Corp.

1905 E 5TH STREET, STE A, VANCOUVER, WA 98661

TITLE: 2.5 AL PIPE CLAMP KIT

B

DRAWING NUMBER: K10222-001

SCALE: NONE

SHEET 1 of 1

REVISIONS			
REV	DESCRIPTION	BY	DATE
A	INITIAL RELEASE	LWF	06/12/2018

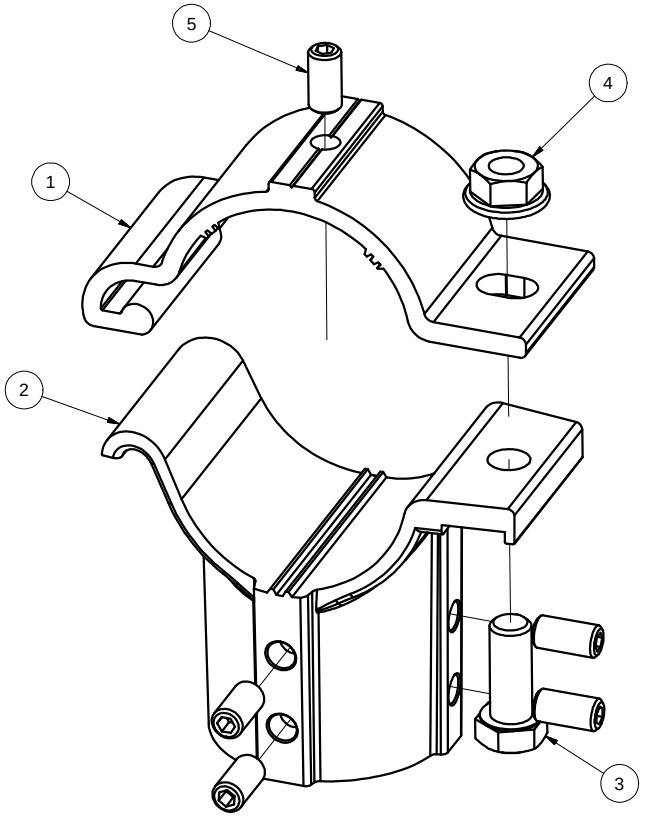

ITEM	PART NUMBER	DESCRIPTION	QTY
5	B10001-001	SET SCREW M10X20	5
4	B15020-001	FLANGE NUT 1/2-13	1
3	B15014-005	HEX CAP SCREW 1/2-13 X 1.25", 304 SS	1
2	A20327-001	2.5" AL PIPE TEE, FEMALE	1
1	A20326-001	2.5" AL PIPE TEE, MALE	1

MATERIAL: SEE NOTES

Third Angle Projection:

GENERAL SPECIFICATIONS
All Dimensions in inches [millimeters]
Tolerances
X.XXX ±0.01 [0.25mm]
X.XX ±0.02 [0.50mm]
X.X ±0.039 [1.0mm]
Unless otherwise spec'd

Break all sharp edges .010-.020 unless otherwise specified.

DRAWN BY: LWF
DATE: 06/12/2018
CHECKED BY:
APPROVALS:

SunModo Corp.

14800 NE 65TH STREET, VANCOUVER WA 98682

TITLE: 2.5" PIPE TEE KIT

B

DRAWING NUMBER: K10341-001

SCALE: NONE

SHEET 1 of 1

REVISIONS			
REV	DESCRIPTION	BY	DATE
A	INITIAL RELEASE	LWF	06/12/2018

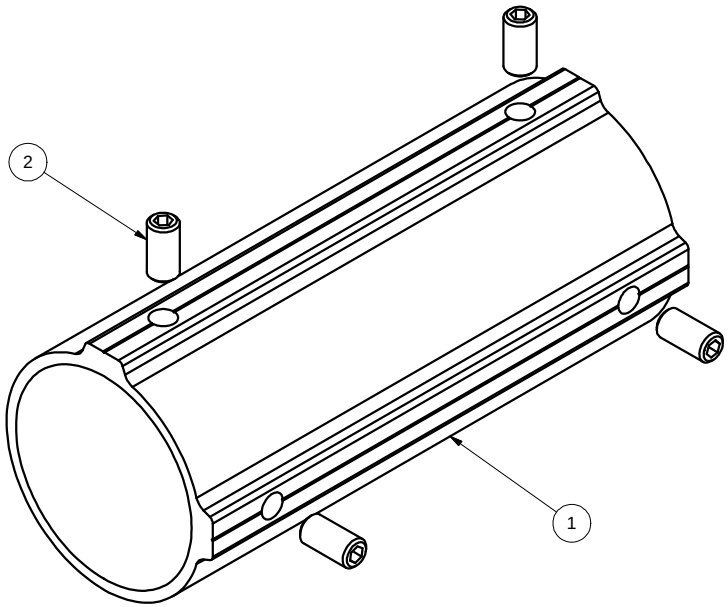

ITEM	PART NUMBER	DESCRIPTION	QTY
2	B10001-001	SET SCREW M10X20	4
1	A20328-001	2.5" PIPE SPLICE	1

MATERIAL: SEE NOTES

Third Angle Projection:

GENERAL SPECIFICATIONS
All Dimensions in inches [millimeters]
Tolerances
X.XXX ±0.01 [0.25mm]
X.XX ±0.02 [0.50mm]
X.X ±0.039 [1.0mm]
Unless otherwise spec'd

Break all sharp edges .010-.020 unless otherwise specified.

DRAWN BY: LWF
DATE: 06/12/2018
CHECKED BY:
APPROVALS:

SunModo Corp.

14800 NE 65TH STREET, VANCOUVER WA 98682

TITLE: 2.5" PIPE SPLICE KIT

B

DRAWING NUMBER: K10342-001

SCALE: NONE

SHEET 1 of 1

NOTES: UNLESS OTHERWISE SPECIFIED

1. DIMENSIONS SHOWN ARE INCHES [MILIMETERS].

2. MATERAIL:HIGH STRENGTH STEEL PIPE OR TUBE.

3. FINISH: HOT DIP GALVANIZE PER ASTM A123 / A123M - 02.

   MINIMUM 50 KSI YIELD STRESS.

4. BREAK ALL BURRS AND SHARP EDGES.

5. ALL WELDING MUST BE IN COMPLIANCE WITH AWS CODE D1;1.

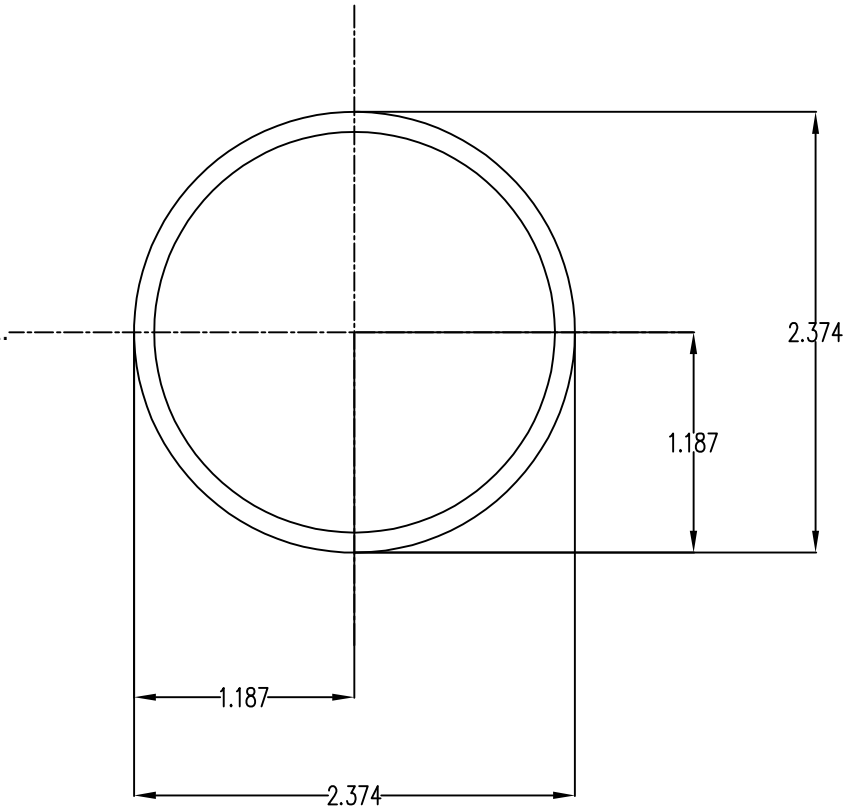

Section properties:

Weight: 2.641 lbs/ft
Area: 0.776 in^2
Perimeter: 14.238 in
Bounding Box: X: -1.187,1.187
Y: -1.187,1.187
Centroid:(0.000,0.000)
Moments of Inertia(in^4): Ix=0.499,Iy=0.499
Section modulus in bending(in^3): Wx=0.420,Wy=0.420
Radii of Gyration: X: 0.802, Y: 0.802

MATERIAL SEE NOTES		**Sunmodo Corp.**
Third Angle Projection:		14800 NE 65TH STREET, VANCOUVER WA 98682
GENERAL SPECIFICATIONS All Dimensions in Inches [millimeters] Tolerances X.XXX ±0.01 [0.25mm] X.XX ±0.02 [0.50mm] X.X ±0.039 [1.0mm] Unless otherwise spec'd	Break all sharp edges .010-.020 unless otherwise specified.	TITLE PIPE, HSS, 2.375" OD X 12 GAUGE,L=XXX
DRAWN BY LWF	DATE 04/03/2019	B — DRAWING NUMBER A21165
CHECKED BY		
APPROVALS		SCALE: NONE — SHEET 1 of 1

NOTES: UNLESS OTHERWISE SPECIFIED

1. DIMENSIONS SHOWN ARE INCHES [MILIMETERS].

2. MATERAIL:HIGH STRENGTH STEEL PIPE OR TUBE.

3. FINISH: HOT DIP GALVANIZE PER ASTM A123 / A123M - 02.

   MINIMUM 50 KSI YIELD STRESS.

4. BREAK ALL BURRS AND SHARP EDGES.

5. ALL WELDING MUST BE IN COMPLIANCE WITH AWS CODE D1;1.

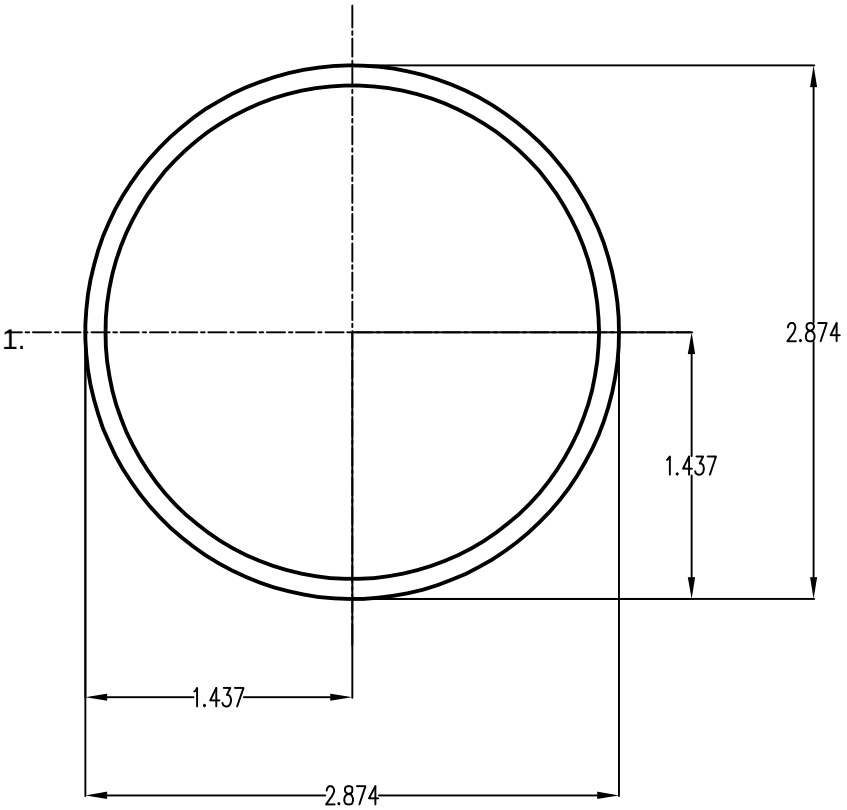

Section properties:

Weight: 3.201 lbs/ft
Area: 0.941 in^2
Perimeter: 17.378 in
Bounding Box: X: -1.437,1.437
Y: -1.437,1.437
Centroid:(0.000,0.000)
Moments of Inertia(in^4): Ix=0.901,Iy=0.901
Section modulus in bending(in^3): Wx=0.627,Wy=0.627
Radii of Gyration: X: 0.979, Y: 0.979

MATERIAL SEE NOTES		**Sunmodo Corp.**
Third Angle Projection:		14800 NE 65TH STREET, VANCOUVER WA 98682
GENERAL SPECIFICATIONS All Dimensions in Inches [millimeters] Tolerances X.XXX ±0.01 [0.25mm] X.XX ±0.02 [0.50mm] X.X ±0.039 [1.0mm] Unless otherwise spec'd	Break all sharp edges .010-.020 unless otherwise specified.	TITLE PIPE, HSS, 2.875" OD X 12 GAUGE,L=XXX
DRAWN BY LWF	DATE 04/03/2019	B — DRAWING NUMBER A21168
CHECKED BY		
APPROVALS		SCALE: NONE — SHEET 1 of 1