Project Number: U2716-115-191

April 6, 2021

Sunmodo
14800 NE 65th Street
Vancouver, WA 98682

REFERENCE: Sunmodo Sunturf Ground Mount A6 (85x45)
Ground Mount PV Array Installation

To Whom It May Concern:

Per request of Sunmodo, we have been asked to prepare the structural design of a ground-mounted PV solar array system with several foundation options as shown in the attached calculations. The adopted building code in this jurisdiction is the Connecticut State Building Code, 2018 Edition (2015 IBC). Vector Structural Engineering requires that we review each site specific install, and we are not liable for installs at site specific locations we have not reviewed. The following design parameters are used in our analysis:

- Minimum Design Loads for Buildings and Other Structures (ASCE 7-10)
- Design wind speed for risk category I structures: 140 mph
- Wind exposure: C
- Ground snow load: 70 psf
- The ground screws and helical piers must be tested to 1.5 times uplift and 2.0 times lateral reactions found in the table below.

Load (ASD)	Value (lbs)	Factor of Safety	Test Value (lbs)
UPLIFT	2824	1.5	4236
LATERAL	1816	2	3632

Foundation concrete shall have a minimum compressive strength of 2500 psi at 28 days. Cement for all concrete shall be Type I or II with a minimum of 6% entrained air with a water/cement ratio of 0.50. Maximum aggregate size shall be 3/4". No special inspection of concrete strength is required.

Footings are designed based on an allowable soil bearing pressure of 1500 psf an allowable skin friction of 250 psf, an allowable lateral bearing pressure of 150 pcf, and a coefficient of friction of 0.3. Vector Structural Engineering strongly recommends independent soils testing be performed by a licensed geotechnical engineer to verify the assumed soil parameters.

All ground mounts are to be installed per manufacturer's recommendations. The use of solar panel support span tables provided by the manufacturer is allowed only where the site conditions and solar panel configuration match the description of the span tables. Electrical engineering is beyond our scope. All work performed must be in accordance with accepted industry-wide methods and applicable safety standards. Vector Structural Engineering assumes no responsibility for improper installation of the solar panels.

Very truly yours,

VECTOR STRUCTURAL ENGINEERING, LLC
Firm License: PEC 0001229

STATE OF CONNECTICUT
RUSSELL N. EMERY
No. 34376
LICENSED
PROFESSIONAL ENGINEER

04/06/2021

Russell Emery, P.E.
License: PEN.0034376 - Expires: 01/31/2022
Project Engineer

Enclosures

RNE/stb

VECTOR ENGINEERS
651 W GALENA PARK BLVD. #101 (801) 990-1775
DRAPER, UTAH 84020 (801) 990-1776 FAX

JOB NO. U2716-115-191
PROJECT SUNMODO SUNTURF GROUND MOUNTS A6
SUBJECT ALL OPTIONS

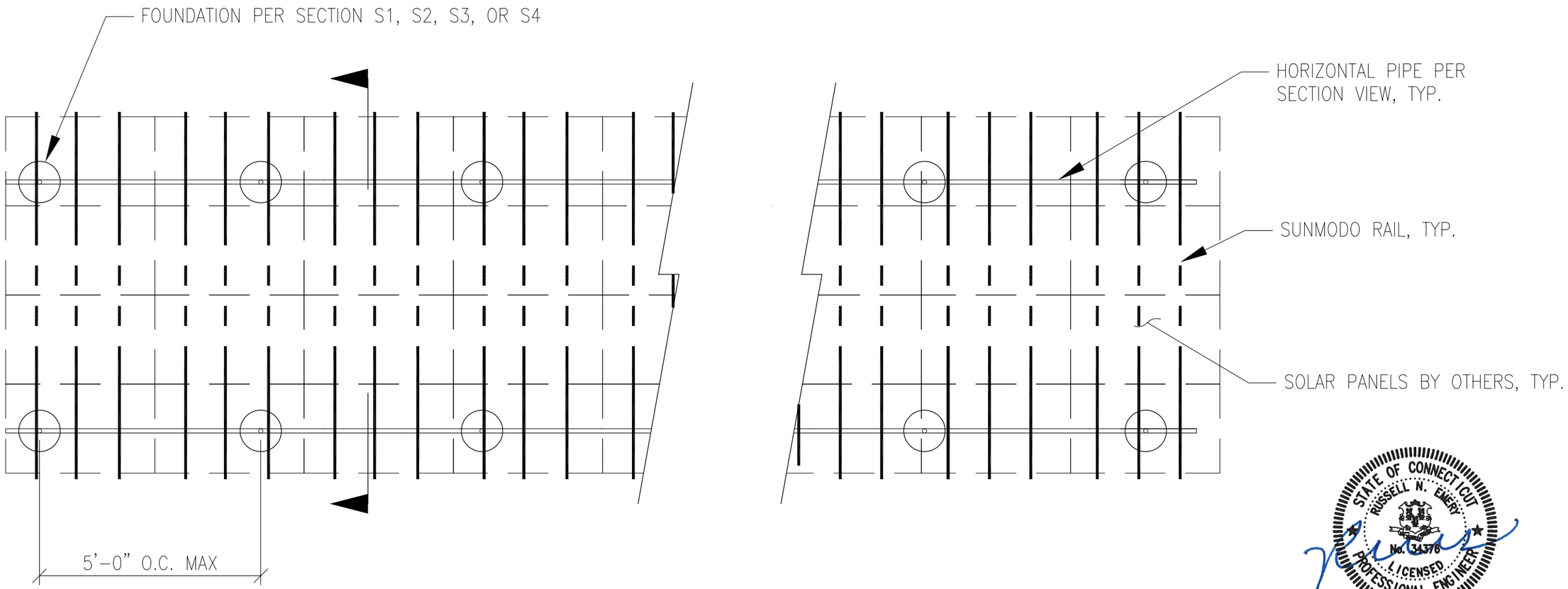

STATE OF CONNECTICUT
RUSSELL N. EMERY
No. 34376
LICENSED
PROFESSIONAL ENGINEER
04/06/2021

Vector Engineers requires that we review each site specific install and is not liable for installs at site specific locations we have not reviewed.

PV ARRAY PLAN

N.T.S.

P1

VECTOR ENGINEERS

JOB NO. U2716-115-191

PROJECT SUNMODO SUNTURF GROUND MOUNTS A6

SUBJECT DRILLED PIER OPTION

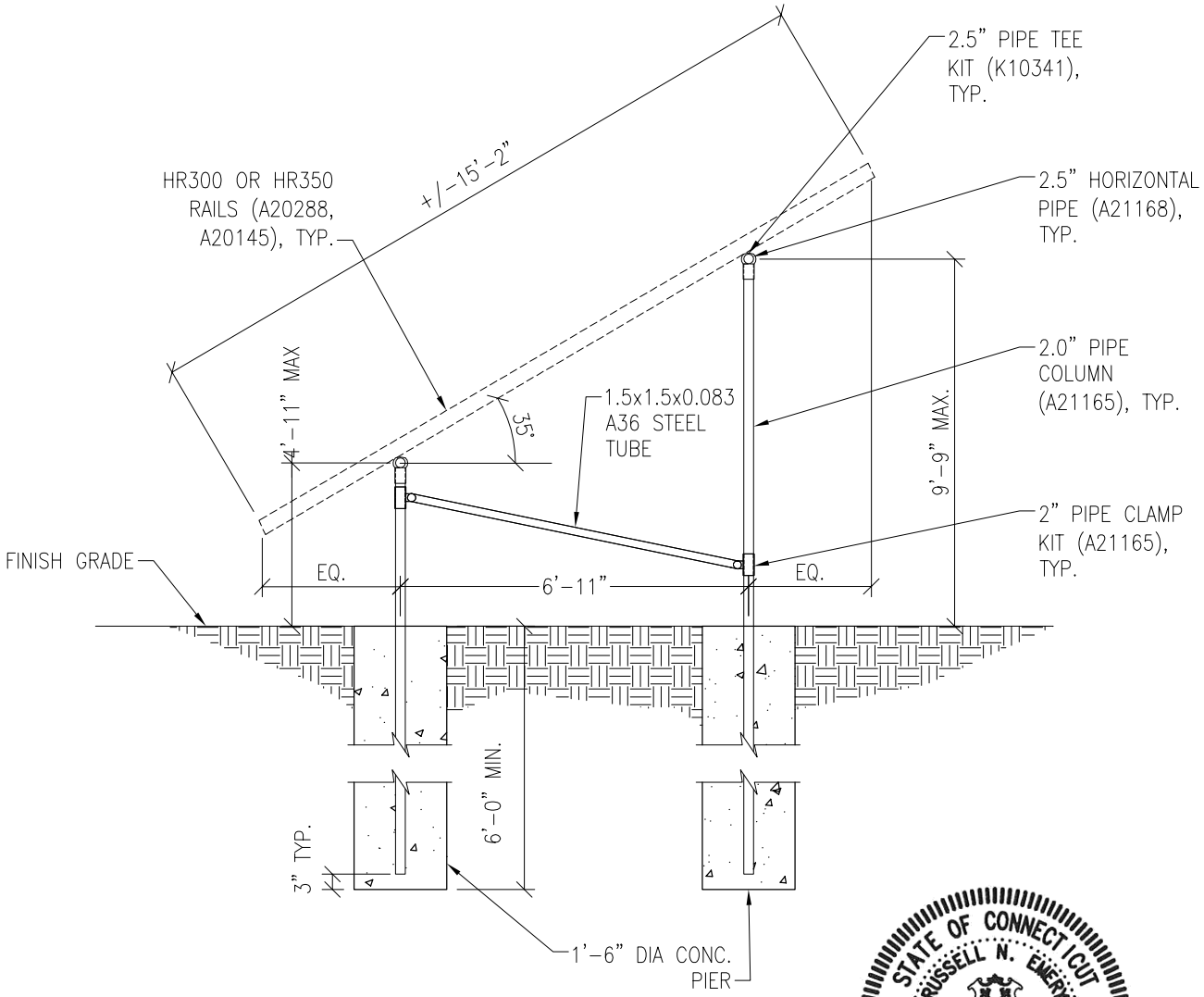

STATE OF CONNECTICUT
RUSSELL N. EMERY
No. 34376
LICENSED
PROFESSIONAL ENGINEER

04/06/2021

Vector Engineers requires that we review each site specific install and is not liable for installs at site specific locations we have not reviewed.

PV ARRAY SECTION

N.T.S.

S1

651 W GALENA PARK BLVD. #101
DRAPER, UTAH 84020
(801) 990-1775
(801) 990-1776 FAX
WWW.VECTORSE.COM

VECTOR ENGINEERS

JOB NO. U2716-115-191

PROJECT SUNMODO SUNTURF GROUND MOUNTS A6

SUBJECT HELICAL PIER OPTION

NOTES:

1. For ground mount components see Section S1.
2. A minimum of (1) helical pier must be load-tested as follows:
   - 2.1. Safety factor for uplift = 1.5,
   - 2.2. Safety factor for lateral loads = 2.0
   - 2.3. Upward deflection limit = 1/2"
   - 2.4. Lateral deflection limit = 1"
   - 2.5. The load tests must be performed by an approved contractor.

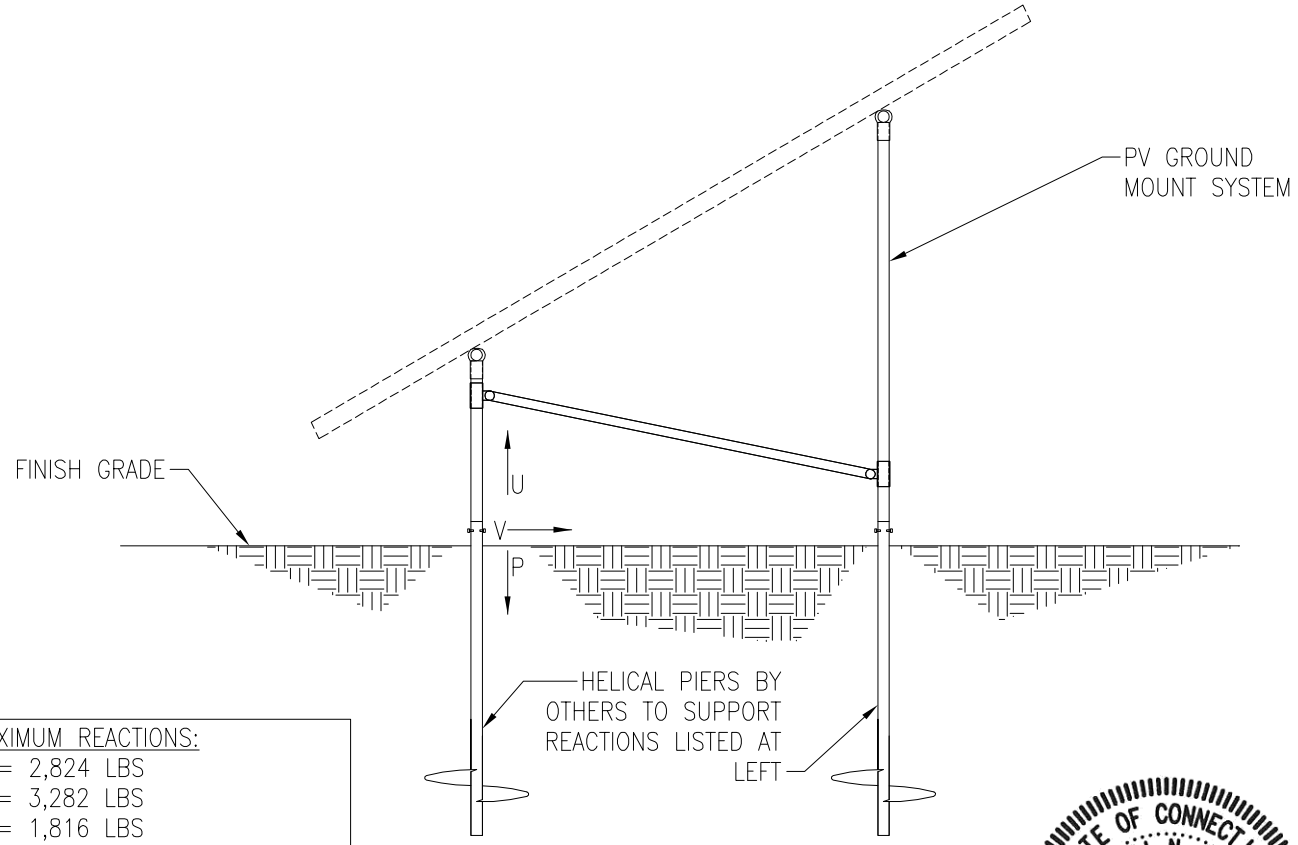

MAXIMUM REACTIONS:
U = 2,824 LBS
P = 3,282 LBS
V = 1,816 LBS

STATE OF CONNECTICUT
RUSSELL N. EMERY
No. 34376
LICENSED
PROFESSIONAL ENGINEER

04/06/2021

Vector Engineers requires that we review each site specific install and is not liable for installs at site specific locations we have not reviewed.

PV ARRAY SECTION

N.T.S.

S2

651 W Galena Park Blvd. #101
Draper, Utah 84020
(801) 990-1775
(801) 990-1776 FAX
www.vectorse.com

VECTOR ENGINEERS

JOB NO. U2716-115-191

PROJECT SUNMODO SUNTURF GROUND MOUNTS A6

SUBJECT GROUND SCREW OPTION

NOTES:

1. For ground mount components see Section S1.
2. A minimum of (1) ground screw must be load-tested as follows:
   - 2.1. Safety factor for uplift = 1.5,
   - 2.2. Safety factor for lateral loads = 2.0
   - 2.3. Upward deflection limit = 1/2"
   - 2.4. Lateral deflection limit = 1"
   - 2.5. The load tests must be performed by an approved contractor.

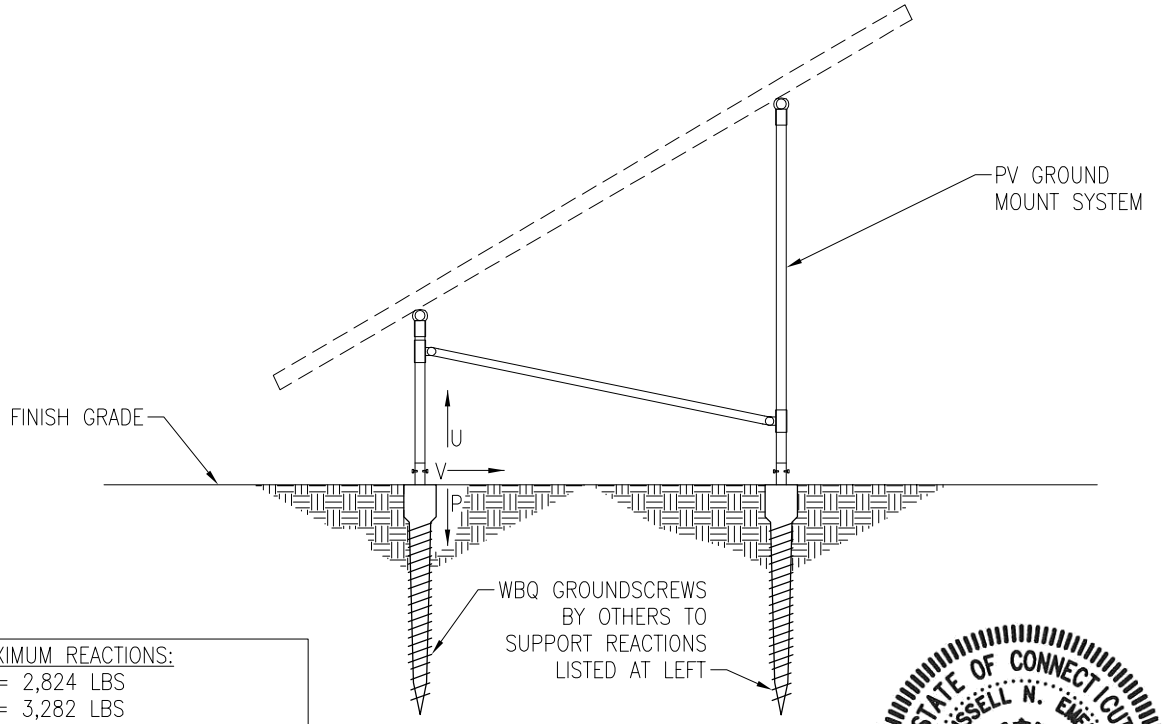

MAXIMUM REACTIONS:
U = 2,824 LBS
P = 3,282 LBS
V = 1,816 LBS

STATE OF CONNECTICUT
RUSSELL N. EMERY
No. 34378
LICENSED
PROFESSIONAL ENGINEER

Vector Engineers requires that we review each site specific install and is not liable for installs at site specific locations we have not reviewed.

PV ARRAY SECTION

N.T.S.

04/06/2021

S3

651 W Galena Park Blvd. #101
Draper, Utah 84020
(801) 990-1775
(801) 990-1776 FAX
www.vectorse.com

VECTOR ENGINEERS

JOB NO. U2716-115-191

PROJECT SUNMODO SUNTURF GROUND MOUNTS A6

SUBJECT BALLASTED BLOCK OPTION

NOTES:

1. For ground mount components see Section S1.

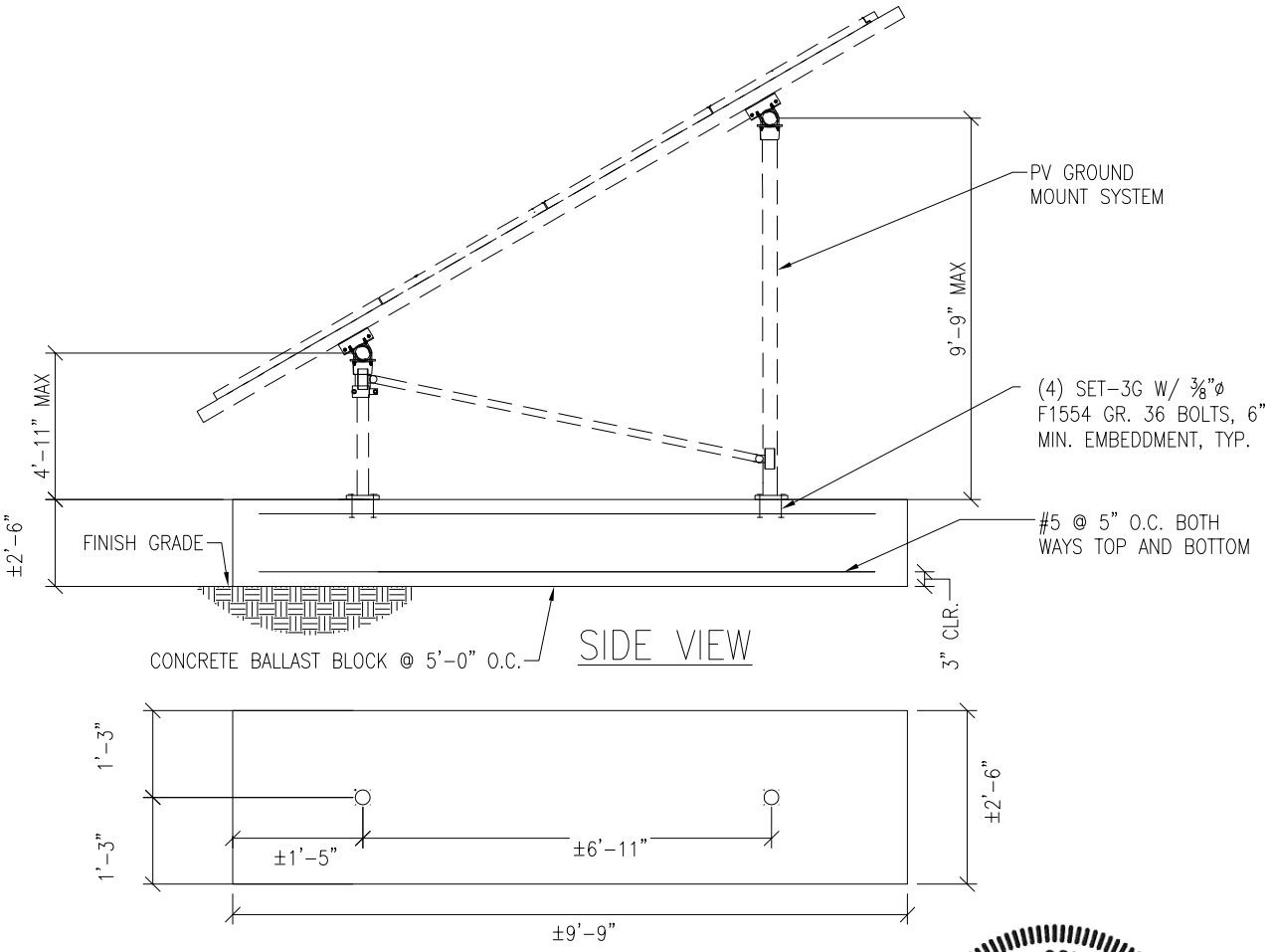

Vector Engineers requires that we review each site specific install and is not liable for installs at site specific locations we have not reviewed.

STATE OF CONNECTICUT
RUSSELL N. EMERY
No. 34376
LICENSED
PROFESSIONAL ENGINEER

PV ARRAY SECTION

N.T.S.

S4

04/06/2021

651 W GALENA PARK BLVD. #101
DRAPER, UTAH 84020
(801) 990-1775
(801) 990-1776 FAX
WWW.VECTORSE.COM

JOB NO.: U2716-115-191 **DESIGNED:** STB
DATE: 08/01/19

PROJECT: A6 – Sunmodo Sunturf GM **SUBJECT:** Dead Load

Design Weight:

Individual Panel Weight [lb]:	50.7
Panel Transverse Length (T5) [in]:	41.2
Panel Transverse Length (T5) [ft]:	3.4
Panel Longitudinal Length (L2) [in]:	81.4
Panel Longitudinal Length (L2) [ft]:	6.8
Individual Panel Area [ft^2]:	23.3
Individual Panel Weight [psf]:	2.2
# of Panels in Transverse Direction:	4
Approximate Transverse Length (T4) [ft]:	13.7
# of Panels in Longitudinal Direction:	12
Approximate Longitudinal Length (L1) [ft]:	81.4
Transverse Column Spacing (T1) [ft]:	6.7
Longitudinal Column Spacing (L3) [ft]:	6.0
# of Columns in Longitudinal Direction:	14
# of Columns in Transverse Direction:	2
Total Number of Columns:	28
Panel Slope from Horizontal (a) [°]:	35.0
Short Column Height (H1) [ft]:	4.6
Approximate Tall Column Height (H2) [ft]:	9.3
Transverse Brace between Columns :	Yes
Approximate Brace Length (B1) [ft]:	9.0
Weight of Columns [plf]:	3.7
Weight of Cross Pipe [plf]:	3.7
Weight of Brace [plf]:	3.7
Tributary Transverse Length per Column [ft]:	6.9
Tributary Longitudinal Length per Column [ft]:	6.0
Tributary Area per Column [ft^2]:	41.2
Rail Weight [plf]:	1.0
Transverse Rail Weight per Column [lb]:	13.7
Longitudinal Rail Weight per Column [lb]:	21.9
Tall Column Weight [lb]:	33.9
Panel Weight per Column [lb]:	89.7
Rail Weight per Column [lb]:	13.7
Cross Pipe Weight per Column [lb]:	21.9
Brace Weight per Column [lb]:	16.4
Total Weight per Column (1.0 D) [lb]:	**175.7**

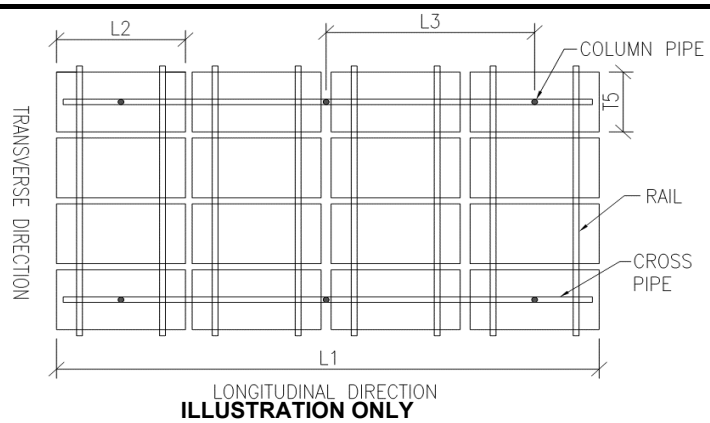

ILLUSTRATION ONLY

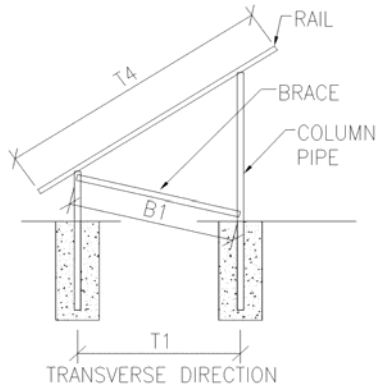

ILLUSTRATION ONLY

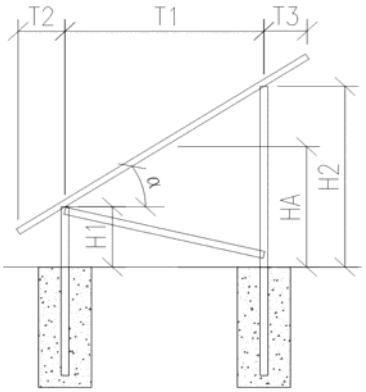

ILLUSTRATION ONLY

Assumptions:
- T2 = T3

JOB NO.: U2716-115-191 **DESIGNED:** STB
DATE: 08/01/19

PROJECT: A6 – Sunmodo Sunturf GM **SUBJECT:** Snow Load

SNOW LOAD (S):

ASCE 7 Standard:	10	
Panel Slope from Horizontal [°]:	35.0	
Snow Ground Load, p_g [psf]:	70.0	(Section 7.2)
Terrain Category:	C	(Table 7-2)
Exposure of Roof:	Fully Exposed	(Table 7-2)
Exposure Factor, C_e:	0.9	(Table 7-2)
Thermal Factor, C_t:	1.2	(Table 7-3)
Risk Category:	I	(Table 1.5-1)
Importance Factor, I_S:	0.8	(Table 1.5-2)
Flat Roof Snow Load, p_f [psf]:	42	(Equation 7.3-1)
Minimum Roof Snow Load, p_m [psf]:	0	(Section 7.3.4)
Unobstructed Slippery Surface?	Yes	(Section 7.4)
Slope Factor Figure:	Figure 7-2c	(Section 7.4)
Roof Slope Factor, C_s:	0.636	(Figure 7-2)
Sloped Roof Snow Load, p_s [psf]:	27	(Equation 7.4-1)
Design Snow Load, S [psf]:	27	
Tributary Transverse Length [ft]:	5.6	
Tributary Longitudinal Length [ft]:	6	
Tributary Area per Column [ft^2]:	33.7	
Snow Load per Column (1.0 S) [lb]:	**909.2**	

JOB NO.: U2716-115-191 **DESIGNED:** STB
DATE: 08/01/19

PROJECT: A6 – Sunmodo Sunturf GM **SUBJECT:** Wind Pressure

Design Wind Load:

ASCE 7 Standard:	10	
Basic Wind Speed, V [mph]:	140	
Risk Category:	I	
Exposure Category	C	(Section 26.7.3)
Velocity Pressure Exposure Coefficient, K_h:	0.85	(Table 27.3-1)
Topographic Factor, K_{ht}:	1.0	(Section 26.8.2)
Wind Directionality Factor, K_d:	0.85	(Table 26.6-1)
Internal Pressure Coefficient, GC_{pi} :	0.00	(Table 26.11-1)
Velocity Pressure, q_h [psf]:	36.3	(Equation 27.3-1)
Gust Effect Factor, G:	0.85	(Section 26.9.1)
Panel Slope [degrees]:	35.0	

Net Pressure Coefficients (C_N) per: (Figure 27.4-4)

Clear Wind Flow	C_{NW}	C_{NL}
Case 1 (γ = 0°, Load Case A)	-1.80	-1.80
Case 2 (γ = 0°, Load Case B)	-2.43	-0.57
Case 3 (γ = 180°, Load Case A)	2.10	2.17
Case 4 (γ = 180°, Load Case B)	2.67	1.07

Design Wind Pressures (p) [psf] per: (Equation 27.4-3)

Clear Wind Flow	q_hGC_{NW}	q_hGC_{NL}
Case 1 (γ = 0°, Load Case A)	-55.5	-55.5
Case 2 (γ = 0°, Load Case B)	-75.0	-17.5
Case 3 (γ = 180°, Load Case A)	64.7	66.8
Case 4 (γ = 180°, Load Case B)	82.2	32.9

Wind Pressure on Each Side of Panels [psf]

Clear Wind Flow	Short Col. Pressure	Long Col. Pressure
Case 1 (γ = 0°, Load Case A)	-55.5	-55.5
Case 2 (γ = 0°, Load Case B)	-17.5	-75.0
Case 3 (γ = 180°, Load Case A)	64.7	66.8
Case 4 (γ = 180°, Load Case B)	82.2	32.9

Design Wind Load Per ASCE 7-10

$p = q_h G C_n$

Velocity Pressure Exposure Coefficient, K_h:	0.85	(Table 27.3-1)
Topographic Factor, K_{ht}:	1.0	(Section 26.8.2)
Wind Directionality Factor, K_d:	0.85	(Table 26.6-1)
Ultimate Wind Speed, V [mph]:	140	
Velocity Pressure, q_h [psf]:	36.3	(Equation 27.3-1)
Gust Effect Factor, G:	0.85	(Section 26.9.1)

γ= 90° or 270°

Force Coefficient, C_N:

Horizontal Distance from Winward Edge	Roof angle	Load Case	Obstructed Wind Flow CN
<= h	35	A	-0.8
		B	0.8
> h, <= 2h	35	A	-0.6
		B	0.5
> 2h	35	A	-0.3
		B	0.3

Design Wind Pressure, p [psf]:

	Roof angle	Load Case	Obstructed Wind Flow
<= h	35	A	-24.7
		B	24.7
> h, <= 2h	35	A	-18.5
		B	15.4
> 2h	35	A	-9.2
		B	9.2

Foundation Option 1: Drilled Concrete Pier

JOB NO.: U2716-115-191
SUBJECT: CONC. PIER

PROJECT: A6 - Sunturf Ground Mount

DRILLED CONCRETE PIER DESIGN

Column Reactions:

Max. Shear, V [k]:	1.8	Max. Down, P_d [k]:	3.3
Max. Moment, M [k-ft]:	0.0	Max. Uplift, P_u [k]:	2.8

Pier Properties:

Pier Shape:	Round		
Pier Diameter, b [ft]:	1.5	Volume of Concrete [ft^3]:	11
Top of Pier Elevation [ft]:	0.00	Volume of Concrete [yd^3]:	0.4
Pier Depth, d [ft]:	6.0	Weight of Concrete [k]:	1.6

Soil Properties:

Allow. Bearing Pressure [psf]:	1,500	Optional Parameters for Uplift:	
1/3 increase for short term loads?	No		
		Skin Friction* [psf]:	250
Lateral Bearing, S [pcf]:	150	Top Length to Ignore [ft]:	0
Max. Lateral Bearing (opt'l) [psf]:		1/3 increase for short term loads?	No
Top Depth to Ignore [ft]:	0		
1/3 increase for short term loads?	No	Combine w/ Bearing:	No
1/2" deflection at t/o pier allowed:	Yes		

*per IBC Section 1810.3.3.1.4

Check Bearing:

Bearing Capacity [k]:	7.1	**Bearing capacity OK.**

Check Uplift:

Uplift Capacity [k]:	8.5	**Uplift capacity OK.**

Check Lateral Bearing:

Top of Pier Constrained?:	No	IBC Section1807.3.2.1
Applied Lateral Force, P [lb]:	1,816	
Point of Application, h [ft]:	0.0	
$S_{\_max}$ [psf]:		
S [psf]:	600	
A = 2.34*P/(Sb):	4.72	
Required Pier Depth, d_{reqd} [ft]:	4.70	IBC Eq. 18-1

Result: **Lateral bearing capacity OK.**

Foundation Option 2: Helical Pier

The ground screws and helical piers must be tested to 1.5 times uplift and 2.0 times lateral reactions found in the table below.

Load (ASD)	Value (lbs)	Factor of Safety	Test Value (lbs)
UPLIFT	2824	1.5	4236
LATERAL	1816	2	3632

Foundation Option 3: Ground Screw

The ground screws and helical piers must be tested to 1.5 times uplift and 2.0 times lateral reactions found in the table below.

Load (ASD)	Value (lbs)	Factor of Safety	Test Value (lbs)
UPLIFT	2824	1.5	4236
LATERAL	1816	2	3632

Foundation Option 4: Ballasted Block

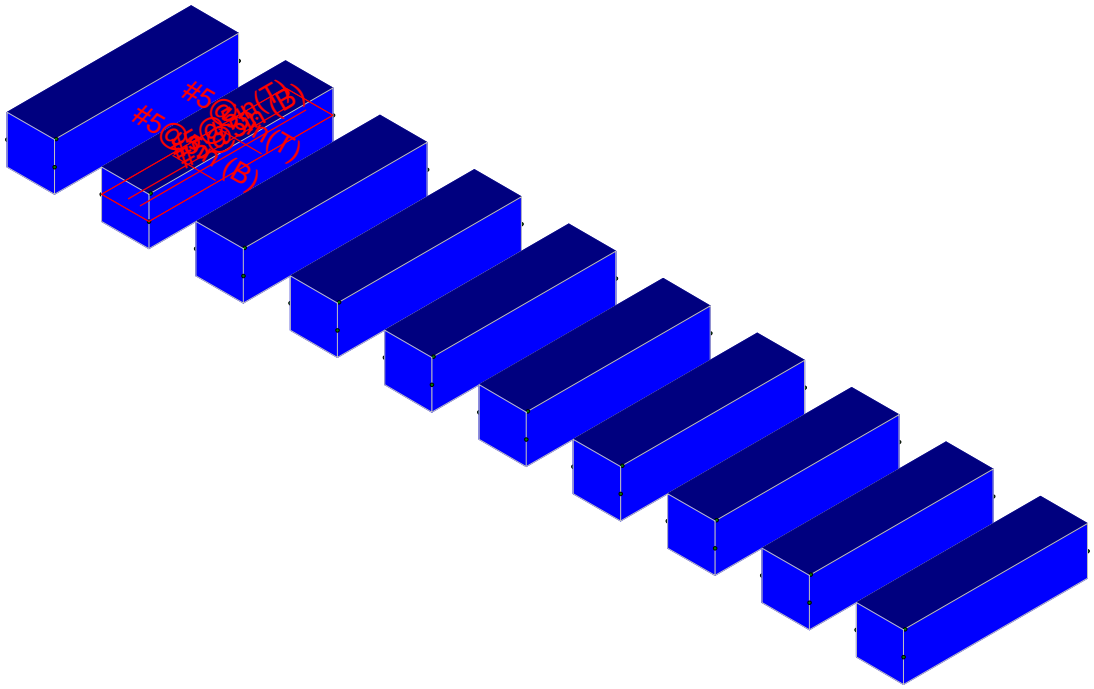

Results for LC 1, 1.0 D

Vector Structural Engineeri...		SK - 2
STB	Ground Mount	Apr 6, 2021 at 12:52 PM
U2716.115.191		Sunmodo Sunturf A6 v3 85x45.r3d

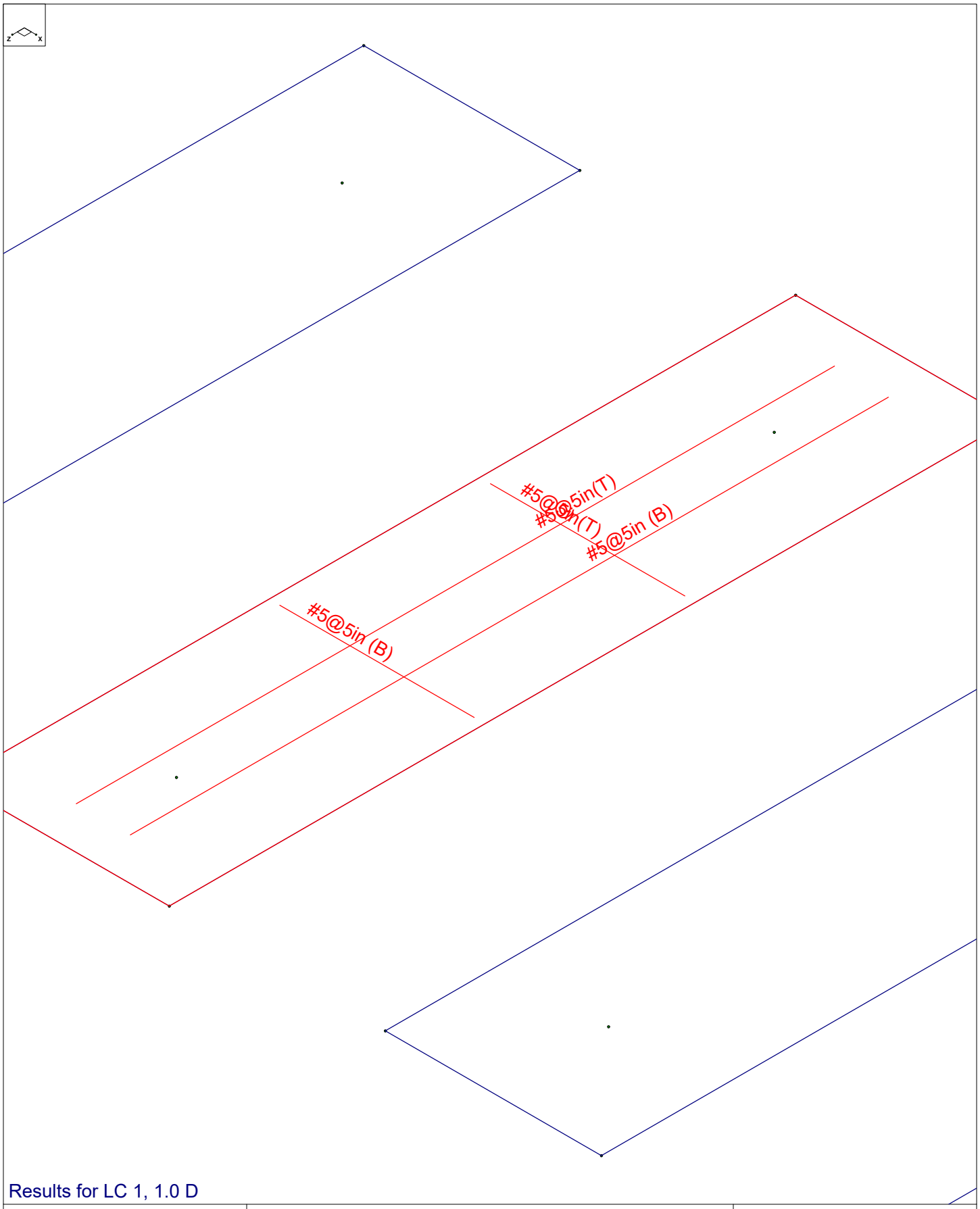

Results for LC 1, 1.0 D

Vector Structural Engineeri...		SK - 1
STB	Ground Mount	Apr 6, 2021 at 12:52 PM
U2716.115.191		Sunmodo Sunturf A6 v3 85x45.r3d

(Global) Model Settings

Display Sections for Member Calcs	5
Max Internal Sections for Member Calcs	100
Mesh Size (in)	12
Max Iterations	10
Merge Tolerance (in)	.12
Solver	Sparse Accelerated
Coefficient of Friction	.3
No. of Shear Regions	4
Shear Region Spacing Increment (in)	4
Min 1 Bar Dia Spacing for Beams?	No
Optimize footings for OTM / Sliding?	Yes
Parme Beta Factor	.65
Pile Safety Factor	3
Concrete Stress Block	0
Concrete Rebar Set	Rectangular
Concrete Code	ASTM A615
HR Steel Pile Code	ACI 318-14
Wood Pile Code	AISC 14th (360-10): ASD AWC NDS-15: ASD

Concrete Properties

	Label	E [ksi]	G [ksi]	Nu	Therm (/...	Density[lb/ft^3]	f'c[psi]	Lambda	Flex Stee...	Shear St...
1	Conc3000NW	3156	1372	.15	.6	145	3000	1	60000	60000
2	Conc3500NW	3409	1482	.15	.6	145	3500	1	60000	60000
3	Conc4000NW	3644	1584	.15	.6	145	4000	1	60000	60000
4	Conc3000LW	2085	907	.15	.6	109.999	3000	.75	60000	60000
5	Conc3500LW	2252	979	.15	.6	109.999	3500	.75	60000	60000
6	Conc4000LW	2408	1047	.15	.6	109.999	4000	.75	60000	60000
7	Conc2500NW	3156	1372	.15	.6	145	2500	1	60000	60000

General Design Parameters

	Label	Max Bending Chk	Max Shear Chk	Top Cover[in]	Bottom Cover[in]
1	Typical	1	1	3	3

Slab Rebar Parameters

	Label	Top Bar	Bottom Bar	Max Top Bar Sp...	Min Top Bar Sp...	Max Bot Bar Sp...	Min Bot Bar Sp...	Spacing Incr...	Rebar Options
1	Typical	#5	#5	5	5	5	5	1	Optimize

Soil Definitions

	Label	Subgrade Modulus[lb/ft^3]	Allowable Bearing[psf]	Depth Properties	Default?
1	Default	1e+5	1500	None	Yes

Point Loads and Moments (Cat 1 : DL)

	Label	Direction	Magnitude[lb,lb-ft]
1	R3D_N1_1	X	-3.98
2	R3D_N1_1	Y	178.273
3	R3D_N2	Y	158.516
4	R3D_N132_1	Y	174.459
5	R3D_N133_1	Y	168.182
6	R3D_N109_1	Y	171.845
7	R3D_N110A_1	Y	169.721
8	R3D_N121_1	Y	175.462

Point Loads and Moments (Cat 1 : DL) (Continued)

	Label	Direction	Magnitude[lb,lb-ft]
9	R3D_N122_1	Y	169.648
10	R3D_N133B	Y	176.265
11	R3D_N134B_1	Y	170.596
12	R3D_N151_1	Y	174.762
13	R3D_N152_1	Y	168.584
14	R3D_N143A	Y	175.943
15	R3D_N144A	Y	170.266
16	R3D_N149A_1	Y	176.347
17	R3D_N150A_1	Y	170.317
18	R3D_N155B	X	3.82
19	R3D_N155B	Y	188.842
20	R3D_N156B	Y	169.101
21	R3D_N161A	Y	167.594
22	R3D_N162A	Y	166.106

Point Loads and Moments (Cat 6 : RLL)

	Label	Direction	Magnitude[lb,lb-ft]
1	R3D_N1_1	X	-21.702
2	R3D_N1_1	Y	785.405
3	R3D_N2	X	-6.227
4	R3D_N2	Y	793.566
5	R3D_N132_1	X	-1.022
6	R3D_N132_1	Y	804.458
7	R3D_N133_1	X	-3.243
8	R3D_N133_1	Y	851.582
9	R3D_N109_1	Y	775.38
10	R3D_N109_1	Z	-2.175
11	R3D_N110A_1	Y	863.372
12	R3D_N121_1	Y	812.243
13	R3D_N121_1	Z	1.889
14	R3D_N122_1	X	2.144
15	R3D_N122_1	Y	860.793
16	R3D_N133B	Y	815.3
17	R3D_N134B_1	X	-1.204
18	R3D_N134B_1	Y	866.267
19	R3D_N151_1	X	1.092
20	R3D_N151_1	Y	806.457
21	R3D_N152_1	X	3.992
22	R3D_N152_1	Y	854.235
23	R3D_N143A	Y	813.328
24	R3D_N144A	X	2.085
25	R3D_N144A	Y	864.255
26	R3D_N149A_1	Y	817.326
27	R3D_N149A_1	Z	1.86
28	R3D_N150A_1	X	-1.808
29	R3D_N150A_1	Y	864.514
30	R3D_N155B	X	20.773
31	R3D_N155B	Y	846.639
32	R3D_N156B	X	1.002
33	R3D_N156B	Y	855.305
34	R3D_N161A	X	1.057
35	R3D_N161A	Y	750.771
36	R3D_N161A	Z	-2.077
37	R3D_N162A	X	2.549
38	R3D_N162A	Y	842.455

Point Loads and Moments (Cat 16 : OL1)

	Label	Direction	Magnitude[lb,lb-ft]
1	R3D_N1_1	X	64.186
2	R3D_N1_1	Y	-4010.692
3	R3D_N1_1	Z	2319.644
4	R3D_N2	X	9.002
5	R3D_N2	Y	718.218
6	R3D_N2	Z	-104.64
7	R3D_N132_1	X	3.17
8	R3D_N132_1	Y	-4175.861
9	R3D_N132_1	Z	2488.997
10	R3D_N133_1	X	1.426
11	R3D_N133_1	Y	768.781
12	R3D_N133_1	Z	-109.955
13	R3D_N109_1	X	1.031
14	R3D_N109_1	Y	-4081.339
15	R3D_N109_1	Z	2512.277
16	R3D_N110A_1	X	-1.742
17	R3D_N110A_1	Y	767.071
18	R3D_N110A_1	Z	-108.68
19	R3D_N121_1	X	-1.188
20	R3D_N121_1	Y	-4277.201
21	R3D_N121_1	Z	2539.585
22	R3D_N122_1	X	-6.538
23	R3D_N122_1	Y	831.204
24	R3D_N122_1	Z	-110.516
25	R3D_N133B	X	1.695
26	R3D_N133B	Y	-4236.657
27	R3D_N133B	Z	2520.482
28	R3D_N134B_1	X	-1.579
29	R3D_N134B_1	Y	783.358
30	R3D_N134B_1	Z	-110.49
31	R3D_N151_1	X	-3.259
32	R3D_N151_1	Y	-4224.198
33	R3D_N151_1	Z	2521.227
34	R3D_N152_1	X	-4.457
35	R3D_N152_1	Y	807.162
36	R3D_N152_1	Z	-110.411
37	R3D_N143A	X	-1.995
38	R3D_N143A	Y	-4204.966
39	R3D_N143A	Z	2499.96
40	R3D_N144A	Y	759.625
41	R3D_N144A	Z	-110.312
42	R3D_N149A_1	X	1.157
43	R3D_N149A_1	Y	-4303.464
44	R3D_N149A_1	Z	2555.819
45	R3D_N150A_1	X	5.531
46	R3D_N150A_1	Y	838.701
47	R3D_N150A_1	Z	-110.808
48	R3D_N155B	X	-61.491
49	R3D_N155B	Y	-4323.619
50	R3D_N155B	Z	2504.964
51	R3D_N156B	X	2.656
52	R3D_N156B	Y	780.793
53	R3D_N156B	Z	-109.63
54	R3D_N161A	X	-3.311
55	R3D_N161A	Y	-3965.122
56	R3D_N161A	Z	2443.123
57	R3D_N162A	X	-3.31

Point Loads and Moments (Cat 16 : OL1) (Continued)

	Label	Direction	Magnitude[lb,lb-ft]
58	R3D_N162A	Y	741.788
59	R3D_N162A	Z	-108.909

Point Loads and Moments (Cat 17 : OL2)

	Label	Direction	Magnitude[lb,lb-ft]
1	R3D_N1_1	X	84.227
2	R3D_N1_1	Y	-4529.418
3	R3D_N1_1	Z	1962.399
4	R3D_N2	Y	1695.467
5	R3D_N2	Z	-88.307
6	R3D_N132_1	X	4.131
7	R3D_N132_1	Y	-4683.677
8	R3D_N132_1	Z	2090.855
9	R3D_N133_1	X	-4.271
10	R3D_N133_1	Y	1809.081
11	R3D_N133_1	Z	-92.558
12	R3D_N109_1	X	1.226
13	R3D_N109_1	Y	-4551.312
14	R3D_N109_1	Z	2098.328
15	R3D_N110A_1	Y	1823.971
16	R3D_N110A_1	Z	-91.267
17	R3D_N121_1	X	-1.568
18	R3D_N121_1	Y	-4812.607
19	R3D_N121_1	Z	2154.688
20	R3D_N122_1	X	-4.428
21	R3D_N122_1	Y	1900.345
22	R3D_N122_1	Z	-93.354
23	R3D_N133B	X	2.189
24	R3D_N133B	Y	-4761.157
25	R3D_N133B	Z	2124.75
26	R3D_N134B_1	X	-4.241
27	R3D_N134B_1	Y	1855.365
28	R3D_N134B_1	Z	-93.169
29	R3D_N151_1	X	-4.258
30	R3D_N151_1	Y	-4744.303
31	R3D_N151_1	Z	2129.749
32	R3D_N152_1	X	1.786
33	R3D_N152_1	Y	1861.026
34	R3D_N152_1	Z	-93.106
35	R3D_N143A	X	-2.599
36	R3D_N143A	Y	-4721.489
37	R3D_N143A	Z	2100.687
38	R3D_N144A	X	2.607
39	R3D_N144A	Y	1822.669
40	R3D_N144A	Z	-92.938
41	R3D_N149A_1	X	1.533
42	R3D_N149A_1	Y	-4843.049
43	R3D_N149A_1	Z	2168.876
44	R3D_N150A_1	X	3.74
45	R3D_N150A_1	Y	1913.375
46	R3D_N150A_1	Z	-93.603
47	R3D_N155B	X	-80.636
48	R3D_N155B	Y	-4878.367
49	R3D_N155B	Z	2116.916
50	R3D_N156B	X	5.078
51	R3D_N156B	Y	1831.929

Point Loads and Moments (Cat 17 : OL2) (Continued)

	Label	Direction	Magnitude[lb,lb-ft]
52	R3D_N156B	Z	-92.46
53	R3D_N161A	X	-4.251
54	R3D_N161A	Y	-4422.713
55	R3D_N161A	Z	2043.051
56	R3D_N162A	Y	1774.973
57	R3D_N162A	Z	-91.533

Point Loads and Moments (Cat 18 : OL3)

	Label	Direction	Magnitude[lb,lb-ft]
1	R3D_N1_1	X	-77.163
2	R3D_N1_1	Y	4794.763
3	R3D_N1_1	Z	-2749.119
4	R3D_N2	X	-10.396
5	R3D_N2	Y	-890.924
6	R3D_N2	Z	124.006
7	R3D_N132_1	X	-3.809
8	R3D_N132_1	Y	4991.044
9	R3D_N132_1	Z	-2949.286
10	R3D_N133_1	X	-1.49
11	R3D_N133_1	Y	-953.436
12	R3D_N133_1	Z	130.296
13	R3D_N109_1	X	-1.235
14	R3D_N109_1	Y	4877.106
15	R3D_N109_1	Z	-2976.431
16	R3D_N110A_1	X	2.014
17	R3D_N110A_1	Y	-952.006
18	R3D_N110A_1	Z	128.777
19	R3D_N121_1	X	1.428
20	R3D_N121_1	Y	5112.723
21	R3D_N121_1	Z	-3010.008
22	R3D_N122_1	X	7.709
23	R3D_N122_1	Y	-1028.821
24	R3D_N122_1	Z	130.973
25	R3D_N133B	X	-2.036
26	R3D_N133B	Y	5064.046
27	R3D_N133B	Z	-2986.866
28	R3D_N134B_1	X	1.978
29	R3D_N134B_1	Y	-971.952
30	R3D_N134B_1	Z	130.936
31	R3D_N151_1	X	3.917
32	R3D_N151_1	Y	5049.05
33	R3D_N151_1	Z	-2987.909
34	R3D_N152_1	X	5.08
35	R3D_N152_1	Y	-999.634
36	R3D_N152_1	Z	130.842
37	R3D_N143A	X	2.398
38	R3D_N143A	Y	5026.019
39	R3D_N143A	Z	-2962.3
40	R3D_N144A	X	1.048
41	R3D_N144A	Y	-943.364
42	R3D_N144A	Z	130.722
43	R3D_N149A_1	X	-1.392
44	R3D_N149A_1	Y	5144.149
45	R3D_N149A_1	Z	-3029.265
46	R3D_N150A_1	X	-6.52
47	R3D_N150A_1	Y	-1037.95

Point Loads and Moments (Cat 18 : OL3) (Continued)

	Label	Direction	Magnitude[lb,lb-ft]
48	R3D_N150A_1	Z	131.318
49	R3D_N155B	X	73.921
50	R3D_N155B	Y	5168.703
51	R3D_N155B	Z	-2968.668
52	R3D_N156B	X	-3.251
53	R3D_N156B	Y	-968.136
54	R3D_N156B	Z	129.917
55	R3D_N161A	X	3.977
56	R3D_N161A	Y	4738.267
57	R3D_N161A	Z	-2894.591
58	R3D_N162A	X	3.833
59	R3D_N162A	Y	-921.034
60	R3D_N162A	Z	129.051

Point Loads and Moments (Cat 19 : OL4)

	Label	Direction	Magnitude[lb,lb-ft]
1	R3D_N1_1	X	-40.202
2	R3D_N1_1	Y	3140.962
3	R3D_N1_1	Z	-2380.15
4	R3D_N2	X	-15.657
5	R3D_N2	Y	195.771
6	R3D_N2	Z	107.556
7	R3D_N132_1	X	-2.01
8	R3D_N132_1	Y	3297.983
9	R3D_N132_1	Z	-2566.622
10	R3D_N133_1	X	-6.16
11	R3D_N133_1	Y	204.625
12	R3D_N133_1	Z	113.221
13	R3D_N109_1	Y	3245.923
14	R3D_N109_1	Z	-2600.989
15	R3D_N110A_1	X	2.985
16	R3D_N110A_1	Y	220.386
17	R3D_N110A_1	Z	112.094
18	R3D_N121_1	Y	3364.929
19	R3D_N121_1	Z	-2600.494
20	R3D_N122_1	X	7.655
21	R3D_N122_1	Y	173.544
22	R3D_N122_1	Z	113.52
23	R3D_N133B	X	-1.092
24	R3D_N133B	Y	3338.032
25	R3D_N133B	Z	-2592.705
26	R3D_N134B_1	Y	218.778
27	R3D_N134B_1	Z	113.634
28	R3D_N151_1	X	2.057
29	R3D_N151_1	Y	3330.661
30	R3D_N151_1	Z	-2589.724
31	R3D_N152_1	X	9.338
32	R3D_N152_1	Y	181.94
33	R3D_N152_1	Z	113.549
34	R3D_N143A	X	1.266
35	R3D_N143A	Y	3316.539
36	R3D_N143A	Z	-2577.394
37	R3D_N144A	X	3.97
38	R3D_N144A	Y	232.31
39	R3D_N144A	Z	113.52
40	R3D_N149A_1	Y	3384.826

Point Loads and Moments (Cat 19 : OL4) (Continued)

	Label	Direction	Magnitude[lb,lb-ft]
41	R3D_N149A_1	Z	-2616.762
42	R3D_N150A_1	X	-6.48
43	R3D_N150A_1	Y	171.585
44	R3D_N150A_1	Z	113.817
45	R3D_N155B	X	38.56
46	R3D_N155B	Y	3389.845
47	R3D_N155B	Z	-2572.243
48	R3D_N156B	Y	203.175
49	R3D_N156B	Z	112.734
50	R3D_N161A	X	2.154
51	R3D_N161A	Y	3152.637
52	R3D_N161A	Z	-2527.264
53	R3D_N162A	X	5.521
54	R3D_N162A	Y	222.657
55	R3D_N162A	Z	112.267

Point Loads and Moments (Cat 20 : OL5)

	Label	Direction	Magnitude[lb,lb-ft]
1	R3D_N1_1	X	-27.082
2	R3D_N1_1	Y	1840.193
3	R3D_N1_1	Z	-1060.856
4	R3D_N2	X	-9.723
5	R3D_N2	Y	-333.46
6	R3D_N2	Z	44.52
7	R3D_N132_1	Y	659.224
8	R3D_N132_1	Z	-396.045
9	R3D_N133_1	X	-1.586
10	R3D_N133_1	Y	-124.783
11	R3D_N133_1	Z	20.396
12	R3D_N109_1	X	2.344
13	R3D_N109_1	Y	1590.799
14	R3D_N109_1	Z	-976.387
15	R3D_N110A_1	X	6.811
16	R3D_N110A_1	Y	-309.576
17	R3D_N110A_1	Z	41.099
18	R3D_N121_1	Y	1377.805
19	R3D_N121_1	Z	-826.947
20	R3D_N122_1	Y	-258.106
21	R3D_N122_1	Z	34.942
22	R3D_N133B	X	2.058
23	R3D_N133B	Y	959.423
24	R3D_N133B	Z	-569.515
25	R3D_N134B_1	X	5.446
26	R3D_N134B_1	Y	-174.126
27	R3D_N134B_1	Z	26.5
28	R3D_N151_1	X	1.345
29	R3D_N151_1	Y	705.59
30	R3D_N151_1	Z	-420.677
31	R3D_N152_1	Y	-132.122
32	R3D_N152_1	Z	18.996
33	R3D_N143A	X	1.071
34	R3D_N143A	Y	695.934
35	R3D_N143A	Z	-414.632
36	R3D_N144A	Y	-126.821
37	R3D_N144A	Z	18.493
38	R3D_N149A_1	Y	714.775

Point Loads and Moments (Cat 20 : OL5) (Continued)

	Label	Direction	Magnitude[lb,lb-ft]
39	R3D_N149A_1	Z	-422.578
40	R3D_N150A_1	X	-1.224
41	R3D_N150A_1	Y	-137.729
42	R3D_N150A_1	Z	18.42
43	R3D_N155B	X	17.947
44	R3D_N155B	Y	734.701
45	R3D_N155B	Z	-413.797
46	R3D_N156B	Y	-130.482
47	R3D_N156B	Z	18.152
48	R3D_N161A	X	1.481
49	R3D_N161A	Y	640.899
50	R3D_N161A	Z	-407.347
51	R3D_N162A	Y	-124.37
52	R3D_N162A	Z	18.11

Point Loads and Moments (Cat 21 : OL6)

	Label	Direction	Magnitude[lb,lb-ft]
1	R3D_N1_1	X	27.721
2	R3D_N1_1	Y	-1850.646
3	R3D_N1_1	Z	1065.697
4	R3D_N2	X	10.419
5	R3D_N2	Y	334.888
6	R3D_N2	Z	-43.62
7	R3D_N132_1	Y	-668.852
8	R3D_N132_1	Z	401.071
9	R3D_N133_1	X	1.218
10	R3D_N133_1	Y	126.197
11	R3D_N133_1	Z	-19.785
12	R3D_N109_1	X	-2.937
13	R3D_N109_1	Y	-1483.36
14	R3D_N109_1	Z	914.036
15	R3D_N110A_1	X	-8.563
16	R3D_N110A_1	Y	287.395
17	R3D_N110A_1	Z	-38.455
18	R3D_N121_1	Y	-1129.591
19	R3D_N121_1	Z	679.847
20	R3D_N122_1	Y	216.584
21	R3D_N122_1	Z	-30.722
22	R3D_N133B	X	-1.697
23	R3D_N133B	Y	-877.002
24	R3D_N133B	Z	520.06
25	R3D_N134B_1	X	-4.284
26	R3D_N134B_1	Y	156.617
27	R3D_N134B_1	Z	-24.178
28	R3D_N151_1	X	-1.355
29	R3D_N151_1	Y	-704.363
30	R3D_N151_1	Z	420.06
31	R3D_N152_1	Y	132.642
32	R3D_N152_1	Z	-18.804
33	R3D_N143A	X	-1.1
34	R3D_N143A	Y	-696.086
35	R3D_N143A	Z	414.606
36	R3D_N144A	Y	126.617
37	R3D_N144A	Z	-18.436
38	R3D_N149A_1	Y	-714.826
39	R3D_N149A_1	Z	422.555

Point Loads and Moments (Cat 21 : OL6) (Continued)

	Label	Direction	Magnitude[lb,lb-ft]
40	R3D_N150A_1	X	1.157
41	R3D_N150A_1	Y	137.764
42	R3D_N150A_1	Z	-18.402
43	R3D_N155B	X	-18.212
44	R3D_N155B	Y	-735.31
45	R3D_N155B	Z	413.793
46	R3D_N156B	Y	130.373
47	R3D_N156B	Z	-18.15
48	R3D_N161A	X	-1.514
49	R3D_N161A	Y	-640.281
50	R3D_N161A	Z	407.35
51	R3D_N162A	Y	124.414
52	R3D_N162A	Z	-18.105

Slabs

	Label	Thickness [in]	Material	Local Axis Angle ...	Analysis Offset [in]	Passive Pressur...	Soil Overburden [psf]
1	S1	30	Conc2500NW	0	0	0	0
2	S2	30	Conc2500NW	0	0	0	0
3	S3	30	Conc2500NW	0	0	0	0
4	S4	30	Conc2500NW	0	0	0	0
5	S5	30	Conc2500NW	0	0	0	0
6	S6	30	Conc2500NW	0	0	0	0
7	S7	30	Conc2500NW	0	0	0	0
8	S8	30	Conc2500NW	0	0	0	0
9	S9	30	Conc2500NW	0	0	0	0
10	S10	30	Conc2500NW	0	0	0	0

Load Combinations

	Label	Solve	Service	A...	SF	Cat...	Fa...	Cat...	Fa...	Cat...	Fa...	Cat...	Fa...	Cat...	Fa...	Cat...	Fa...	Cat...	Fa...	Cat...	Fa...	C...	F...	C...	F...
1	1.0 D	Yes	Yes		1.5	DL	1																		
2	1.0 D + 1....	Yes	Yes		1.5	DL	1	RLL	1																
3	1.0 D + 0....	Yes	Yes		1.5	DL	1	RLL		OL1	.6														
4	1.0 D + 0....	Yes	Yes		1.5	DL	1	RLL		OL2	.6														
5	1.0 D + 0....	Yes	Yes		1.5	DL	1	RLL		OL3	.6														
6	1.0 D + 0....	Yes	Yes		1.5	DL	1	RLL		OL4	.6														
7	1.0 D + 0....	Yes	Yes		1.5	DL	1	RLL		OL5	.6														
8	1.0 D + 0....	Yes	Yes		1.5	DL	1	RLL		OL6	.6														
9	1.0 D + 0....	Yes	Yes		1.5	DL	1	RLL	.75	OL1	.45														
10	1.0 D + 0....	Yes	Yes		1.5	DL	1	RLL	.75	OL2	.45														
11	1.0 D + 0....	Yes	Yes		1.5	DL	1	RLL	.75	OL3	.45														
12	1.0 D + 0....	Yes	Yes		1.5	DL	1	RLL	.75	OL4	.45														
13	1.0 D + 0....	Yes	Yes		1.5	DL	1	RLL	.75	OL5	.45														
14	1.0 D + 0....	Yes	Yes		1.5	DL	1	RLL	.75	OL6	.45														
15	0.9 D + 0....	Yes	Yes			DL	.9	RLL		OL1	.6														
16	0.9 D + 0....	Yes	Yes			DL	.9	RLL		OL2	.6														
17	0.9 D + 0....	Yes	Yes			DL	.9	RLL		OL3	.6														
18	0.9 D + 0....	Yes	Yes			DL	.9	RLL		OL4	.6														
19	0.9 D + 0....	Yes	Yes			DL	.9	RLL		OL5	.6														
20	0.9 D + 0....	Yes	Yes			DL	.9	RLL		OL6	.6														
21																									
22	1.4D	Yes				DL	1.4																		
23	1.2D+1.6SL	Yes				DL	1.2	RLL	1.6																
24	1.2D+1.6S...	Yes				DL	1.2	RLL	1.6	OL1	.5														
25	1.2D+1.6S...	Yes				DL	1.2	RLL	1.6	OL2	.5														
26	1.2D+1.6S...	Yes				DL	1.2	RLL	1.6	OL3	.5														
27	1.2D+1.6S...	Yes				DL	1.2	RLL	1.6	OL4	.5														

Load Combinations (Continued)

	Label	Solve	Service	A..	SF	Cat..	Fa...	Cat..	Fa...	Cat..	Fa...	Cat..	Fa...	Cat..	Fa...	Cat..	Fa...	Cat..	Fa...	Cat..	Fa...	C...	F...	C...	F...
28	1.2D+1.6S...	Yes				DL	1.2	RLL	1.6	OL5	.5														
29	1.2D+1.6S...	Yes				DL	1.2	RLL	1.6	OL6	.5														
30	1.2D+1.0...	Yes				DL	1.2			OL1	1														
31	1.2D-1.0Wx	Yes				DL	1.2			OL2	1														
32	1.2D+1.0...	Yes				DL	1.2			OL3	1														
33	1.2D-1.0Wz	Yes				DL	1.2			OL4	1														
34	1.2D+1.0...	Yes				DL	1.2			OL5	1														
35	1.2D-1.0...	Yes				DL	1.2			OL6	1														
36	1.0D+1.0...	Yes				DL	1			OL1	1														
37	1.0D-1.0Wx	Yes				DL	1			OL2	1														
38	1.0D+1.0...	Yes				DL	1			OL3	1														
39	1.0D-1.0Wz	Yes				DL	1			OL4	1														
40	1.0D+1.0...	Yes				DL	1			OL5	1														
41	1.0D-1.0...	Yes				DL	1			OL6	1														

Design Strips

	Label	Rebar Angle from Pl...	No. of Design Cuts	Design Rule
1	DS1	0	50	Typical
2	DS2	90	50	Typical

Load Categories

	Category	Point Loads	Line Loads	Area Loads
1	DL	22		
2	RLL	38		
3	OL1	59		
4	OL2	57		
5	OL3	60		
6	OL4	55		
7	OL5	52		
8	OL6	52		

Strip Reinforcing

	Label	UC Top	LC	Top Bars	Governing ...	UC Bot	LC	Bot B...	Gover...	UC Shear	LC	Governing De...
1	DS1	.01	26	#5@5in	DS1-X26	.016	37	#5@5in	DS1-...	.036	37	DS1-X15
2	DS2	.001	36	#5@5in	DS2-X25	.002	26	#5@5in	DS2-...	.005	26	DS2-X25

Slab Overturning Safety Factors (By Combination)

	LC	Slab	Angle[deg]	Mo-xx[lb-ft]	Ms-xx[lb-ft]	Mo-zz[lb-ft]	Ms-zz[lb-ft]	Ms-xx/Mo-xx	Ms-zz/Mo-zz
1	1	S1	0	0	44676.928	0	11475.878	9.999+	9.999+
2	1	S2	0	0	44761.589	0	11471.897	9.999+	9.999+
3	1	S3	0	0	44766.406	0	11476.329	9.999+	9.999+
4	1	S4	0	0	44775.584	0	11478.516	9.999+	9.999+
5	1	S5	0	0	44752.562	0	11473.242	9.999+	9.999+
6	1	S6	0	0	44756.402	0	11474.124	9.999+	9.999+
7	1	S7	0	0	44772.324	0	11477.701	9.999+	9.999+
8	1	S8	0	0	44773.366	0	11478.271	9.999+	9.999+
9	1	S9	0	0	44724.787	0	11462.065	9.999+	9.999+
10	1	S10	0	0	44781.872	0	11482.82	9.999+	9.999+
11	2	S1	0	0	52534.209	0	13519.416	9.999+	9.999+
12	2	S2	0	0	53185.93	0	13520.337	9.999+	9.999+
13	2	S3	0	0	53234.493	0	13562.262	9.999+	9.999+
14	2	S4	0	0	53289.61	0	13583.485	9.999+	9.999+
15	2	S5	0	0	53126.723	0	13553.955	9.999+	9.999+
16	2	S6	0	0	53155.89	0	13537.281	9.999+	9.999+
17	2	S7	0	0	53266.457	0	13569.467	9.999+	9.999+

Slab Overturning Safety Factors (By Combination) (Continued)

	LC	Slab	Angle[deg]	Mo-xx[lb-ft]	Ms-xx[lb-ft]	Mo-zz[lb-ft]	Ms-zz[lb-ft]	Ms-xx/Mo-xx	Ms-zz/Mo-zz
18	2	S8	0	0	53280.321	0	13585.09	9.999+	9.999+
19	2	S9	0	0	52936.412	0	13444.584	9.999+	9.999+
20	2	S10	0	0	53250.638	0	13555.812	9.999+	9.999+
21	3	S1	0	22600.9	44757.456	2579.139	11475.878	1.98	4.45
22	3	S2	0	23194.406	44719.361	2486.768	11471.897	1.928	4.613
23	3	S3	0	24150.826	44749.112	2596.087	11476.329	1.853	4.421
24	3	S4	0	23959.796	44756.996	2590.148	11478.516	1.868	4.432
25	3	S5	0	23624.094	44738.878	2562.204	11473.242	1.894	4.478
26	3	S6	0	23880.317	44741.917	2574.352	11474.124	1.874	4.457
27	3	S7	0	23791.399	44753.897	2586.999	11477.701	1.881	4.437
28	3	S8	0	24298.745	44757.301	2608.604	11478.271	1.842	4.4
29	3	S9	0	22535.288	44679.471	2427.433	11462.065	1.983	4.722
30	3	S10	0	24370.323	44858.768	2745.372	11501.921	1.841	4.19
31	4	S1	0	23875.419	44757.456	2251.804	11475.878	1.875	5.096
32	4	S2	0	24080.44	44719.361	2047.345	11471.897	1.857	5.603
33	4	S3	0	25394.166	44749.112	2193.191	11476.329	1.762	5.233
34	4	S4	0	25130.842	44756.996	2182.423	11478.516	1.781	5.26
35	4	S5	0	24734.421	44738.878	2156.157	11473.242	1.809	5.321
36	4	S6	0	25050.483	44741.917	2166.166	11474.124	1.786	5.297
37	4	S7	0	24924.895	44753.897	2174.127	11477.701	1.796	5.279
38	4	S8	0	25555.339	44757.301	2205.166	11478.271	1.751	5.205
39	4	S9	0	23399.763	44679.471	1992.181	11462.065	1.909	5.754
40	4	S10	0	25719.093	44858.768	2398.166	11501.921	1.744	4.796
41	5	S1	0	4121.561	44676.928	0	14535.095	9.999+	9.999+
42	5	S2	0	4689.723	44761.589	0	14414.554	9.545	9.999+
43	5	S3	0	4912.659	44766.406	0	14525.551	9.112	9.999+
44	5	S4	0	4634.621	44775.584	0	14547.675	9.661	9.999+
45	5	S5	0	4551.406	44752.562	0	14509.397	9.833	9.999+
46	5	S6	0	4789.618	44756.402	0	14497.69	9.344	9.999+
47	5	S7	0	4487.949	44772.324	0	14534.523	9.976	9.999+
48	5	S8	0	4958.845	44773.366	0	14569.788	9.029	9.999+
49	5	S9	0	4535.099	44724.787	0	14313.276	9.862	9.999+
50	5	S10	0	4495.39	44781.872	0	14527.24	9.962	9.999+
51	6	S1	0	0	45083.538	0	14062.217	9.999+	9.999+
52	6	S2	0	0	45062.518	0	14067.15	9.999+	9.999+
53	6	S3	0	0	44940.771	0	14118.702	9.999+	9.999+
54	6	S4	0	0	45166.023	0	14147.761	9.999+	9.999+
55	6	S5	0	0	45073.993	0	14112.452	9.999+	9.999+
56	6	S6	0	0	44958.525	0	14091.482	9.999+	9.999+
57	6	S7	0	0	45234.557	0	14131.484	9.999+	9.999+
58	6	S8	0	0	44931.789	0	14155.299	9.999+	9.999+
59	6	S9	0	0	45064.075	0	13982.023	9.999+	9.999+
60	6	S10	0	0	45169.495	0	14119.744	9.999+	9.999+
61	7	S1	0	1552.309	44676.928	0	12661.135	9.999+	9.999+
62	7	S2	0	1534.578	44761.589	0	12419.08	9.999+	9.999+
63	7	S3	0	1251.421	44766.406	0	12316.103	9.999+	9.999+
64	7	S4	0	830.379	44775.584	0	12056.233	9.999+	9.999+
65	7	S5	0	600.327	44752.562	0	11876.452	9.999+	9.999+
66	7	S6	0	634.707	44756.402	0	11902.208	9.999+	9.999+
67	7	S7	0	608.314	44772.324	0	11902.929	9.999+	9.999+
68	7	S8	0	658.476	44773.366	0	11912.891	9.999+	9.999+
69	7	S9	0	635.116	44724.787	0	11847.24	9.999+	9.999+
70	7	S10	0	591.172	44781.872	0	11909.065	9.999+	9.999+
71	8	S1	0	10425.924	44757.456	1194.029	11475.878	4.293	9.611
72	8	S2	0	8426.102	44719.361	914.224	11471.897	5.307	9.999+
73	8	S3	0	6391.906	44749.112	684.755	11476.329	7.001	9.999+
74	8	S4	0	4959.697	44756.996	549.261	11478.516	9.024	9.999+

Slab Overturning Safety Factors (By Combination) (Continued)

	LC	Slab	Angle[deg]	Mo-xx[lb-ft]	Ms-xx[lb-ft]	Mo-zz[lb-ft]	Ms-zz[lb-ft]	Ms-xx/Mo-xx	Ms-zz/Mo-zz
75	8	S5	0	3781.796	44738.878	408.819	11473.242	9.999+	9.999+
76	8	S6	0	3982.376	44741.917	430.824	11474.124	9.999+	9.999+
77	8	S7	0	3938.593	44753.897	428.752	11477.701	9.999+	9.999+
78	8	S8	0	4034.414	44757.301	434.532	11478.271	9.999+	9.999+
79	8	S9	0	3653.736	44679.471	389.171	11462.065	9.999+	9.999+
80	8	S10	0	4128.956	44858.768	481.02	11501.921	9.999+	9.999+
81	9	S1	0	16950.675	50410.74	1934.354	13008.531	2.974	6.725
82	9	S2	0	17395.805	50384.5	1865.076	13008.227	2.896	6.975
83	9	S3	0	18113.12	50632.14	1947.065	13048.82	2.795	6.702
84	9	S4	0	17969.847	50667.96	1942.35	13052.729	2.82	6.72
85	9	S5	0	17718.071	50568.069	1921.653	13033.777	2.854	6.783
86	9	S6	0	17910.238	50586.131	1930.764	13040.553	2.824	6.754
87	9	S7	0	17843.549	50650.648	1940.249	13054.346	2.839	6.728
88	9	S8	0	18224.059	50675.559	1956.453	13058.385	2.781	6.675
89	9	S9	0	16901.466	50171.243	1820.574	12962.475	2.968	7.12
90	9	S10	0	18277.742	50952.678	2059.029	13138.321	2.788	6.381
91	10	S1	0	17906.565	50410.74	1688.853	13008.531	2.815	7.703
92	10	S2	0	18060.33	50384.5	1535.509	13008.227	2.79	8.472
93	10	S3	0	19045.624	50632.14	1644.893	13048.82	2.658	7.933
94	10	S4	0	18848.132	50667.96	1636.817	13052.729	2.688	7.974
95	10	S5	0	18550.815	50568.069	1617.118	13017.782	2.726	8.05
96	10	S6	0	18787.862	50586.131	1624.625	13040.553	2.692	8.027
97	10	S7	0	18693.671	50650.648	1630.595	13046.525	2.71	8.001
98	10	S8	0	19166.504	50675.559	1653.874	13058.385	2.644	7.896
99	10	S9	0	17549.822	50171.243	1494.136	12962.475	2.859	8.676
100	10	S10	0	19289.32	50952.678	1798.624	13138.321	2.641	7.305
101	11	S1	0	3091.17	50569.889	0	15302.944	9.999+	9.999+
102	11	S2	0	3517.292	51079.845	0	15215.22	9.999+	9.999+
103	11	S3	0	3684.494	51117.471	0	15327.695	9.999+	9.999+
104	11	S4	0	3475.965	51161.103	0	15359.112	9.999+	9.999+
105	11	S5	0	3413.555	51033.183	0	15310.893	9.999+	9.999+
106	11	S6	0	3592.213	51056.018	0	15289.166	9.999+	9.999+
107	11	S7	0	3365.962	51142.924	0	15339.142	9.999+	9.999+
108	11	S8	0	3719.134	51153.582	0	15377.023	9.999+	9.999+
109	11	S9	0	3401.324	50883.505	0	15087.363	9.999+	9.999+
110	11	S10	0	3371.542	51133.447	0	15320.879	9.999+	9.999+
111	12	S1	0	0	50874.846	0	14948.286	9.999+	9.999+
112	12	S2	0	0	51305.542	0	14954.667	9.999+	9.999+
113	12	S3	0	0	51248.245	0	15022.558	9.999+	9.999+
114	12	S4	0	0	51453.933	0	15059.176	9.999+	9.999+
115	12	S5	0	0	51274.256	0	15013.184	9.999+	9.999+
116	12	S6	0	0	51207.61	0	14984.51	9.999+	9.999+
117	12	S7	0	0	51489.599	0	15036.863	9.999+	9.999+
118	12	S8	0	0	51272.4	0	15066.156	9.999+	9.999+
119	12	S9	0	0	51137.971	0	14838.923	9.999+	9.999+
120	12	S10	0	0	51424.164	0	15015.257	9.999+	9.999+
121	13	S1	0	1164.232	50569.889	0	13897.474	9.999+	9.999+
122	13	S2	0	1150.933	51079.845	0	13718.615	9.999+	9.999+
123	13	S3	0	938.565	51117.471	0	13670.61	9.999+	9.999+
124	13	S4	0	622.784	51161.103	0	13490.53	9.999+	9.999+
125	13	S5	0	450.245	51033.183	0	13336.184	9.999+	9.999+
126	13	S6	0	476.03	51056.018	0	13342.555	9.999+	9.999+
127	13	S7	0	456.235	51142.924	0	13365.446	9.999+	9.999+
128	13	S8	0	493.857	51153.582	0	13384.35	9.999+	9.999+
129	13	S9	0	476.337	50883.505	0	13237.836	9.999+	9.999+
130	13	S10	0	443.379	51133.447	0	13357.247	9.999+	9.999+
131	14	S1	0	7819.443	50410.74	895.522	13008.531	6.447	9.999+

Slab Overturning Safety Factors (By Combination) (Continued)

	LC	Slab	Angle[deg]	Mo-xx[lb-ft]	Ms-xx[lb-ft]	Mo-zz[lb-ft]	Ms-zz[lb-ft]	Ms-xx/Mo-xx	Ms-zz/Mo-zz
132	14	S2	0	6319.576	50384.5	685.668	13008.227	7.973	9.999+
133	14	S3	0	4793.93	50632.14	513.567	13040.779	9.999+	9.999+
134	14	S4	0	3719.773	50667.96	411.946	13052.729	9.999+	9.999+
135	14	S5	0	2836.347	50568.069	306.614	13033.777	9.999+	9.999+
136	14	S6	0	2986.782	50586.131	323.118	13040.553	9.999+	9.999+
137	14	S7	0	2953.945	50650.648	321.564	13054.346	9.999+	9.999+
138	14	S8	0	3025.81	50675.559	325.899	13058.385	9.999+	9.999+
139	14	S9	0	2740.302	50171.243	291.878	12962.475	9.999+	9.999+
140	14	S10	0	3096.717	50952.678	360.765	13138.321	9.999+	9.999+
141	15	S1	0	22600.9	40281.71	2579.139	10328.29	1.782	4.005
142	15	S2	0	23194.406	40247.425	2486.768	10324.707	1.735	4.152
143	15	S3	0	24150.826	40274.201	2596.087	10328.696	1.668	3.979
144	15	S4	0	23959.796	40281.296	2590.148	10330.665	1.681	3.988
145	15	S5	0	23624.094	40264.991	2562.204	10325.918	1.704	4.03
146	15	S6	0	23880.317	40267.726	2574.352	10326.712	1.686	4.011
147	15	S7	0	23791.399	40278.508	2586.999	10329.931	1.693	3.993
148	15	S8	0	24298.745	40281.571	2608.604	10330.444	1.658	3.96
149	15	S9	0	22535.288	40211.524	2427.433	10315.858	1.784	4.25
150	15	S10	0	24370.323	40372.891	2745.372	10351.729	1.657	3.771
151	16	S1	0	23875.419	40281.71	2251.804	10328.29	1.687	4.587
152	16	S2	0	24080.44	40247.425	2047.345	10324.707	1.671	5.043
153	16	S3	0	25394.166	40274.201	2193.191	10328.696	1.586	4.709
154	16	S4	0	25130.842	40281.296	2182.423	10330.665	1.603	4.734
155	16	S5	0	24734.421	40264.991	2156.157	10325.918	1.628	4.789
156	16	S6	0	25050.483	40267.726	2166.166	10326.712	1.607	4.767
157	16	S7	0	24924.895	40278.508	2174.127	10329.931	1.616	4.751
158	16	S8	0	25555.339	40281.571	2205.166	10330.444	1.576	4.685
159	16	S9	0	23399.763	40211.524	1992.181	10315.858	1.718	5.178
160	16	S10	0	25719.093	40372.891	2398.166	10351.729	1.57	4.317
161	17	S1	0	4121.561	40209.235	0	13387.507	9.756	9.999+
162	17	S2	0	4689.723	40285.43	0	13267.364	8.59	9.999+
163	17	S3	0	4912.659	40289.765	0	13377.918	8.201	9.999+
164	17	S4	0	4634.621	40298.026	0	13399.823	8.695	9.999+
165	17	S5	0	4551.406	40277.306	0	13362.073	8.849	9.999+
166	17	S6	0	4789.618	40280.762	0	13350.278	8.41	9.999+
167	17	S7	0	4487.949	40295.091	0	13386.753	8.979	9.999+
168	17	S8	0	4958.845	40296.029	0	13421.961	8.126	9.999+
169	17	S9	0	4535.099	40252.308	0	13167.069	8.876	9.999+
170	17	S10	0	4495.39	40303.685	0	13378.958	8.966	9.999+
171	18	S1	0	0	40615.845	0	12914.629	9.999+	9.999+
172	18	S2	0	0	40586.359	0	12919.961	9.999+	9.999+
173	18	S3	0	0	40464.13	0	12971.069	9.999+	9.999+
174	18	S4	0	0	40688.465	0	12999.91	9.999+	9.999+
175	18	S5	0	0	40598.737	0	12965.128	9.999+	9.999+
176	18	S6	0	0	40482.885	0	12944.069	9.999+	9.999+
177	18	S7	0	0	40757.324	0	12983.714	9.999+	9.999+
178	18	S8	0	0	40454.452	0	13007.472	9.999+	9.999+
179	18	S9	0	0	40591.596	0	12835.817	9.999+	9.999+
180	18	S10	0	0	40691.308	0	12971.462	9.999+	9.999+
181	19	S1	0	1552.309	40209.235	0	11513.547	9.999+	9.999+
182	19	S2	0	1534.578	40285.43	0	11271.891	9.999+	9.999+
183	19	S3	0	1251.421	40289.765	0	11168.47	9.999+	9.999+
184	19	S4	0	830.379	40298.026	0	10908.381	9.999+	9.999+
185	19	S5	0	600.327	40277.306	0	10729.128	9.999+	9.999+
186	19	S6	0	634.707	40280.762	0	10754.796	9.999+	9.999+
187	19	S7	0	608.314	40295.091	0	10755.158	9.999+	9.999+
188	19	S8	0	658.476	40296.029	0	10765.064	9.999+	9.999+

Slab Overturning Safety Factors (By Combination) (Continued)

	LC	Slab	Angle[deg]	Mo-xx[lb-ft]	Ms-xx[lb-ft]	Mo-zz[lb-ft]	Ms-zz[lb-ft]	Ms-xx/Mo-xx	Ms-zz/Mo-zz
189	19	S9	0	635.116	40252.308	0	10701.034	9.999+	9.999+
190	19	S10	0	591.172	40303.685	0	10760.783	9.999+	9.999+
191	20	S1	0	10425.924	40281.71	1194.029	10328.29	3.864	8.65
192	20	S2	0	8426.102	40247.425	914.224	10324.707	4.777	9.999+
193	20	S3	0	6391.906	40274.201	684.755	10328.696	6.301	9.999+
194	20	S4	0	4959.697	40281.296	549.261	10330.665	8.122	9.999+
195	20	S5	0	3781.796	40264.991	408.819	10325.918	9.999+	9.999+
196	20	S6	0	3982.376	40267.726	430.824	10326.712	9.999+	9.999+
197	20	S7	0	3938.593	40278.508	428.752	10329.931	9.999+	9.999+
198	20	S8	0	4034.414	40281.571	434.532	10330.444	9.984	9.999+
199	20	S9	0	3653.736	40211.524	389.171	10315.858	9.999+	9.999+
200	20	S10	0	4128.956	40372.891	481.02	10351.729	9.778	9.999+

Slab Sliding Safety Factors (By Combination)

	LC	Slab	Angle[deg]	Va-xx[lb]	Vr-xx[lb]	Va-zz[lb]	Vr-zz[lb]	SR-xx	SR-zz
1	1	S1	0	3.98	2751.822	0	2751.822	9.999+	9.999+
2	1	S2	0	0	2753.255	0	2753.255	9.999+	9.999+
3	1	S3	0	0	2754.319	0	2754.319	9.999+	9.999+
4	1	S4	0	0	2754.844	0	2754.844	9.999+	9.999+
5	1	S5	0	0	2753.578	0	2753.578	9.999+	9.999+
6	1	S6	0	0	2753.79	0	2753.79	9.999+	9.999+
7	1	S7	0	0	2754.648	0	2754.648	9.999+	9.999+
8	1	S8	0	0	2754.785	0	2754.785	9.999+	9.999+
9	1	S9	0	0	2750.896	0	2750.896	9.999+	9.999+
10	1	S10	0	3.82	2758.169	0	2758.169	9.999+	9.999+
11	2	S1	0	31.91	3225.514	0	3225.514	9.999+	9.999+
12	2	S2	0	0	3244.881	2.175	3244.881	9.999+	9.999+
13	2	S3	0	2.144	3256.23	1.889	3256.23	9.999+	9.999+
14	2	S4	0	1.204	3259.314	0	3259.314	9.999+	9.999+
15	2	S5	0	4.265	3250.39	0	3250.39	9.999+	9.999+
16	2	S6	0	5.083	3251.997	0	3251.997	9.999+	9.999+
17	2	S7	0	2.085	3257.923	0	3257.923	9.999+	9.999+
18	2	S8	0	1.808	3259.337	1.86	3259.337	9.999+	9.999+
19	2	S9	0	3.606	3228.864	2.077	3228.864	9.999+	9.999+
20	2	S10	0	25.595	3268.752	0	3268.752	9.999+	9.999+
21	3	S1	0	39.933	2159.177	1329.003	2159.177	9.999+	1.625
22	3	S2	0	.427	2156.687	1442.158	2156.687	9.999+	1.495
23	3	S3	0	4.636	2134.039	1457.441	2134.039	9.999+	1.464
24	3	S4	0	.069	2133.25	1445.995	2133.25	9.999+	1.475
25	3	S5	0	2.757	2140.304	1427.425	2140.304	9.999+	1.499
26	3	S6	0	4.63	2138.723	1446.49	2138.723	9.999+	1.479
27	3	S7	0	1.197	2134.487	1433.789	2134.487	9.999+	1.489
28	3	S8	0	4.013	2131.128	1467.007	2131.128	9.999+	1.453
29	3	S9	0	3.973	2170.695	1400.529	2170.695	9.999+	1.55
30	3	S10	0	31.481	2120.46	1437.2	2120.46	9.999+	1.475
31	4	S1	0	46.556	2241.711	1124.455	2241.711	9.999+	1.994
32	4	S2	0	.736	2262.334	1204.236	2262.334	9.999+	1.879
33	4	S3	0	3.598	2230.112	1236.8	2230.112	9.999+	1.803
34	4	S4	0	1.232	2231.801	1218.949	2231.801	9.999+	1.831
35	4	S5	0	.084	2236.151	1198.978	2236.151	9.999+	1.865
36	4	S6	0	1.483	2234.8	1221.986	2234.8	9.999+	1.829
37	4	S7	0	.005	2232.861	1204.649	2232.861	9.999+	1.854
38	4	S8	0	3.164	2227.444	1245.163	2227.444	9.999+	1.789
39	4	S9	0	2.55	2274.302	1170.911	2274.302	9.999+	1.942
40	4	S10	0	41.515	2209.81	1214.673	2209.81	9.999+	1.819
41	5	S1	0	56.515	3454.514	1575.068	3454.514	9.999+	2.193

Slab Sliding Safety Factors (By Combination) (Continued)

	LC	Slab	Angle[deg]	Va-xx[lb]	Vr-xx[lb]	Va-zz[lb]	Vr-zz[lb]	SR-xx	SR-zz
42	5	S2	0	.467	3459.773	1708.592	3459.773	9.999+	2.025
43	5	S3	0	5.482	3489.421	1727.422	3489.421	9.999+	2.02
44	5	S4	0	.035	3491.421	1713.558	3491.421	9.999+	2.038
45	5	S5	0	3.18	3480.348	1691.394	3480.348	9.999+	2.058
46	5	S6	0	5.398	3482.685	1714.24	3482.685	9.999+	2.032
47	5	S7	0	2.068	3489.526	1698.946	3489.526	9.999+	2.054
48	5	S8	0	4.747	3493.901	1738.768	3493.901	9.999+	2.009
49	5	S9	0	4.686	3437.998	1659.324	3437.998	9.999+	2.072
50	5	S10	0	46.222	3514.271	1703.25	3514.271	9.999+	2.063
51	6	S1	0	37.496	3352.434	1363.556	3352.434	9.999+	2.459
52	6	S2	0	1.791	3377.191	1493.337	3377.191	9.999+	2.262
53	6	S3	0	4.593	3391.244	1492.184	3391.244	9.999+	2.273
54	6	S4	0	.655	3395.07	1487.443	3395.07	9.999+	2.282
55	6	S5	0	4.901	3384.048	1472.041	3384.048	9.999+	2.299
56	6	S6	0	6.837	3386.058	1485.705	3386.058	9.999+	2.279
57	6	S7	0	3.142	3393.441	1478.324	3393.441	9.999+	2.295
58	6	S8	0	3.888	3394.939	1501.767	3394.939	9.999+	2.261
59	6	S9	0	4.605	3358.449	1448.999	3358.449	9.999+	2.318
60	6	S10	0	26.956	3404.912	1475.705	3404.912	9.999+	2.307
61	7	S1	0	26.063	3023.034	609.802	3023.034	9.999+	4.957
62	7	S2	0	5.493	2983.875	561.173	2983.875	9.999+	5.317
63	7	S3	0	0	2955.865	475.203	2955.865	9.999+	6.22
64	7	S4	0	4.503	2896.197	325.809	2896.197	9.999+	8.889
65	7	S5	0	.952	2849.778	225.389	2849.778	9.999+	9.999+
66	7	S6	0	.807	2857.014	241.009	2857.014	9.999+	9.999+
67	7	S7	0	.643	2857.089	237.683	2857.089	9.999+	9.999+
68	7	S8	0	.734	2858.653	242.495	2858.653	9.999+	9.999+
69	7	S9	0	.889	2843.871	233.542	2843.871	9.999+	9.999+
70	7	S10	0	14.588	2866.928	237.387	2866.928	9.999+	9.999+
71	8	S1	0	18.904	2478.986	613.246	2478.986	9.999+	4.042
72	8	S2	0	6.9	2537.982	525.349	2537.982	9.999+	4.831
73	8	S3	0	0	2589.978	389.475	2589.978	9.999+	6.65
74	8	S4	0	3.589	2625.175	297.53	2625.175	9.999+	8.823
75	8	S5	0	.731	2655.9	228.772	2655.9	9.999+	9.999+
76	8	S6	0	.813	2650.88	240.754	2650.88	9.999+	9.999+
77	8	S7	0	.66	2652.144	237.702	2652.144	9.999+	9.999+
78	8	S8	0	.694	2650.914	242.492	2650.914	9.999+	9.999+
79	8	S9	0	.908	2658.039	233.547	2658.039	9.999+	9.999+
80	8	S10	0	7.107	2649.28	237.386	2649.28	9.999+	9.999+
81	9	S1	0	8.007	2662.607	996.752	2662.607	9.999+	2.671
82	9	S2	0	.32	2674.548	1079.987	2674.548	9.999+	2.476
83	9	S3	0	1.868	2665.542	1094.498	2665.542	9.999+	2.435
84	9	S4	0	.851	2667.001	1084.496	2667.001	9.999+	2.459
85	9	S5	0	1.131	2666.231	1070.569	2666.231	9.999+	2.49
86	9	S6	0	.34	2666.146	1084.867	2666.146	9.999+	2.458
87	9	S7	0	.666	2666.983	1075.342	2666.983	9.999+	2.48
88	9	S8	0	1.654	2665.456	1101.65	2665.456	9.999+	2.42
89	9	S9	0	.275	2674.221	1048.839	2674.221	9.999+	2.55
90	9	S10	0	6.324	2662.825	1077.9	2662.825	9.999+	2.47
91	10	S1	0	12.975	2724.508	843.342	2724.508	9.999+	3.231
92	10	S2	0	.552	2753.783	901.546	2753.783	9.999+	3.055
93	10	S3	0	1.09	2737.597	929.017	2737.597	9.999+	2.947
94	10	S4	0	1.826	2740.915	914.211	2740.915	9.999+	2.998
95	10	S5	0	3.262	2738.116	899.234	2738.116	9.999+	3.045
96	10	S6	0	2.7	2738.203	916.49	2738.203	9.999+	2.988
97	10	S7	0	1.568	2740.764	903.487	2740.764	9.999+	3.034
98	10	S8	0	1.017	2737.693	935.268	2737.693	9.999+	2.927

Slab Sliding Safety Factors (By Combination) (Continued)

	LC	Slab	Angle[deg]	Va-xx[lb]	Vr-xx[lb]	Va-zz[lb]	Vr-zz[lb]	SR-xx	SR-zz
99	10	S9	0	.791	2751.927	876.626	2751.927	9.999+	3.139
100	10	S10	0	13.85	2729.837	911.005	2729.837	9.999+	2.997
101	11	S1	0	64.329	3634.109	1181.301	3634.109	9.999+	3.076
102	11	S2	0	.351	3651.863	1283.075	3651.863	9.999+	2.846
103	11	S3	0	5.72	3682.079	1294.149	3682.079	9.999+	2.845
104	11	S4	0	.929	3685.629	1285.168	3685.629	9.999+	2.868
105	11	S5	0	5.584	3671.264	1268.545	3671.264	9.999+	2.894
106	11	S6	0	7.861	3674.117	1285.68	3674.117	9.999+	2.858
107	11	S7	0	3.115	3683.263	1274.21	3683.263	9.999+	2.891
108	11	S8	0	4.916	3687.536	1302.681	3687.536	9.999+	2.831
109	11	S9	0	6.218	3624.698	1246.05	3624.698	9.999+	2.909
110	11	S10	0	51.953	3708.183	1277.438	3708.183	9.999+	2.903
111	12	S1	0	50.064	3557.55	1022.667	3557.55	9.999+	3.479
112	12	S2	0	1.343	3589.926	1121.634	3589.926	9.999+	3.201
113	12	S3	0	5.053	3608.446	1117.721	3608.446	9.999+	3.228
114	12	S4	0	1.394	3613.366	1115.582	3613.366	9.999+	3.239
115	12	S5	0	6.875	3599.039	1104.031	3599.039	9.999+	3.26
116	12	S6	0	8.94	3601.647	1114.279	3601.647	9.999+	3.232
117	12	S7	0	3.92	3611.199	1108.743	3611.199	9.999+	3.257
118	12	S8	0	4.272	3613.315	1124.93	3613.315	9.999+	3.212
119	12	S9	0	6.158	3565.036	1088.307	3565.036	9.999+	3.276
120	12	S10	0	37.504	3626.164	1106.779	3626.164	9.999+	3.276
121	13	S1	0	41.49	3310.5	457.351	3310.5	9.999+	7.238
122	13	S2	0	4.12	3294.94	422.511	3294.94	9.999+	7.798
123	13	S3	0	1.608	3281.911	354.985	3281.911	9.999+	9.245
124	13	S4	0	2.474	3239.212	244.357	3239.212	9.999+	9.999+
125	13	S5	0	3.913	3198.337	169.042	3198.337	9.999+	9.999+
126	13	S6	0	4.418	3204.864	180.757	3204.864	9.999+	9.999+
127	13	S7	0	2.046	3208.935	178.262	3208.935	9.999+	9.999+
128	13	S8	0	1.907	3211.1	180.476	3211.1	9.999+	9.999+
129	13	S9	0	3.371	3179.103	176.714	3179.103	9.999+	9.999+
130	13	S10	0	28.227	3222.676	178.04	3222.676	9.999+	9.999+
131	14	S1	0	7.765	2902.464	459.935	2902.464	9.999+	6.311
132	14	S2	0	5.175	2960.519	392.38	2960.519	9.999+	7.545
133	14	S3	0	1.608	3007.496	293.523	3007.496	9.999+	9.999+
134	14	S4	0	3.594	3035.945	223.147	3035.945	9.999+	9.999+
135	14	S5	0	2.651	3052.929	171.579	3052.929	9.999+	9.999+
136	14	S6	0	3.202	3050.263	180.565	3050.263	9.999+	9.999+
137	14	S7	0	1.069	3055.226	178.276	3055.226	9.999+	9.999+
138	14	S8	0	.835	3055.296	183.264	3055.296	9.999+	9.999+
139	14	S9	0	2.023	3039.729	173.603	3039.729	9.999+	9.999+
140	14	S10	0	11.956	3059.44	178.04	3059.44	9.999+	9.999+
141	15	S1	0	40.331	1883.995	1329.003	1883.995	9.999+	1.418
142	15	S2	0	.427	1881.362	1442.158	1881.362	9.999+	1.305
143	15	S3	0	4.636	1858.608	1457.441	1858.608	9.999+	1.275
144	15	S4	0	.069	1857.766	1445.995	1857.766	9.999+	1.285
145	15	S5	0	2.757	1864.946	1427.425	1864.946	9.999+	1.307
146	15	S6	0	4.63	1863.344	1446.49	1863.344	9.999+	1.288
147	15	S7	0	1.197	1859.022	1433.789	1859.022	9.999+	1.297
148	15	S8	0	4.013	1855.649	1467.007	1855.649	9.999+	1.265
149	15	S9	0	3.973	1895.606	1400.529	1895.606	9.999+	1.353
150	15	S10	0	31.863	1844.643	1437.2	1844.643	9.999+	1.283
151	16	S1	0	46.954	1966.529	1124.455	1966.529	9.999+	1.749
152	16	S2	0	.736	1987.008	1204.236	1987.008	9.999+	1.65
153	16	S3	0	3.598	1954.68	1236.8	1954.68	9.999+	1.58
154	16	S4	0	1.232	1956.317	1218.949	1956.317	9.999+	1.605
155	16	S5	0	.084	1960.793	1198.978	1960.793	9.999+	1.635

Slab Sliding Safety Factors (By Combination) (Continued)

	LC	Slab	Angle[deg]	Va-xx[lb]	Vr-xx[lb]	Va-zz[lb]	Vr-zz[lb]	SR-xx	SR-zz
156	16	S6	0	1.483	1959.421	1221.986	1959.421	9.999+	1.603
157	16	S7	0	.005	1957.396	1204.649	1957.396	9.999+	1.625
158	16	S8	0	3.164	1951.965	1245.163	1951.965	9.999+	1.568
159	16	S9	0	2.55	1999.213	1170.911	1999.213	9.999+	1.707
160	16	S10	0	41.897	1933.993	1214.673	1933.993	9.999+	1.592
161	17	S1	0	56.117	3179.331	1575.068	3179.331	9.999+	2.019
162	17	S2	0	.467	3184.448	1708.592	3184.448	9.999+	1.864
163	17	S3	0	5.482	3213.989	1727.422	3213.989	9.999+	1.861
164	17	S4	0	.035	3215.937	1713.558	3215.937	9.999+	1.877
165	17	S5	0	3.18	3204.99	1691.394	3204.99	9.999+	1.895
166	17	S6	0	5.398	3207.306	1714.24	3207.306	9.999+	1.871
167	17	S7	0	2.068	3214.061	1698.946	3214.061	9.999+	1.892
168	17	S8	0	4.747	3218.422	1738.768	3218.422	9.999+	1.851
169	17	S9	0	4.686	3162.908	1659.324	3162.908	9.999+	1.906
170	17	S10	0	45.84	3238.454	1703.25	3238.454	9.999+	1.901
171	18	S1	0	37.098	3077.252	1363.556	3077.252	9.999+	2.257
172	18	S2	0	1.791	3101.865	1493.337	3101.865	9.999+	2.077
173	18	S3	0	4.593	3115.812	1492.184	3115.812	9.999+	2.088
174	18	S4	0	.655	3119.585	1487.443	3119.585	9.999+	2.097
175	18	S5	0	4.901	3108.69	1472.041	3108.69	9.999+	2.112
176	18	S6	0	6.837	3110.679	1485.705	3110.679	9.999+	2.094
177	18	S7	0	3.142	3117.976	1478.324	3117.976	9.999+	2.109
178	18	S8	0	3.888	3119.461	1501.767	3119.461	9.999+	2.077
179	18	S9	0	4.605	3083.359	1448.999	3083.359	9.999+	2.128
180	18	S10	0	26.574	3129.096	1475.705	3129.096	9.999+	2.12
181	19	S1	0	25.665	2747.852	609.802	2747.852	9.999+	4.506
182	19	S2	0	5.493	2708.55	561.173	2708.55	9.999+	4.827
183	19	S3	0	0	2680.433	475.203	2680.433	9.999+	5.641
184	19	S4	0	4.503	2620.713	325.809	2620.713	9.999+	8.044
185	19	S5	0	.952	2574.42	225.389	2574.42	9.999+	9.999+
186	19	S6	0	.807	2581.635	241.009	2581.635	9.999+	9.999+
187	19	S7	0	.643	2581.624	237.683	2581.624	9.999+	9.999+
188	19	S8	0	.734	2583.175	242.495	2583.175	9.999+	9.999+
189	19	S9	0	.889	2568.781	233.542	2568.781	9.999+	9.999+
190	19	S10	0	14.206	2591.111	237.387	2591.111	9.999+	9.999+
191	20	S1	0	19.302	2203.804	613.246	2203.804	9.999+	3.594
192	20	S2	0	6.9	2262.656	525.349	2262.656	9.999+	4.307
193	20	S3	0	0	2314.546	389.475	2314.546	9.999+	5.943
194	20	S4	0	3.589	2349.69	297.53	2349.69	9.999+	7.897
195	20	S5	0	.731	2380.542	228.772	2380.542	9.999+	9.999+
196	20	S6	0	.813	2375.501	240.754	2375.501	9.999+	9.867
197	20	S7	0	.66	2376.679	237.702	2376.679	9.999+	9.999
198	20	S8	0	.694	2375.435	242.492	2375.435	9.999+	9.796
199	20	S9	0	.908	2382.95	233.547	2382.95	9.999+	9.999+
200	20	S10	0	7.489	2373.463	237.386	2373.463	9.999+	9.998

Envelope Slab Soil Pressures

	Label	UC	LC	Soil Pressure[psf]	Allowable Bearing[psf]	Point
1	S1	.507	5	760.934	1500	N282
2	S2	.512	5	767.475	1500	N289
3	S3	.525	5	787.698	1500	N296
4	S4	.522	5	782.528	1500	N303
5	S5	.518	5	776.437	1500	N310
6	S6	.521	5	782.083	1500	N317
7	S7	.519	5	778.862	1500	N324
8	S8	.527	5	790.383	1500	N331

Envelope Slab Soil Pressures (Continued)

	Label	UC	LC	Soil Pressure[psf]	Allowable Bearing[psf]	Point
9	S9	.504	5	755.862	1500	N338
10	S10	.528	5	791.89	1500	N345

1.Project information

Customer company:
Customer contact name:
Customer e-mail:
Comment:

Project description:
Location:
Fastening description:

2. Input Data & Anchor Parameters

General
Design method:ACI 318-14
Units: Imperial units

Anchor Information:
Anchor type: Bonded anchor
Material: F1554 Grade 36
Diameter (inch): 0.375
Effective Embedment depth, h_{ef} (inch): 6.000
Code report: ICC-ES ESR-4057
Anchor category: -
Anchor ductility: Yes
h_{min} (inch): 7.25
c_{ac} (inch): 10.99
C_{min} (inch): 1.75
S_{min} (inch): 3.00

Base Material
Concrete: Normal-weight
Concrete thickness, h (inch): 30.00
State: Cracked
Compressive strength, f'_c (psi): 2500
$\Psi_{c,V}$: 1.0
Reinforcement condition: B tension, B shear
Supplemental reinforcement: Not applicable
Reinforcement provided at corners: No
Ignore concrete breakout in tension: No
Ignore concrete breakout in shear: No
Hole condition: Dry concrete
Inspection: Periodic
Temperature range, Short/Long: 150/110°F
Ignore 6do requirement: Not applicable
Build-up grout pad: No

Base Plate
Length x Width x Thickness (inch): 4.75 x 4.75 x 0.31

Recommended Anchor
Anchor Name: SET-3G - SET-3G w/ 3/8"Ø F1554 Gr. 36
Code Report: ICC-ES ESR-4057

Load and Geometry
Load factor source: ACI 318 Section 5.3
Load combination: not set
Seismic design: No
Anchors subjected to sustained tension: No
Apply entire shear load at front row: No
Anchors only resisting wind and/or seismic loads: No

Strength level loads:

N_{ua} [lb]: 4690
V_{uax} [lb]: 175
V_{uay} [lb]: -3029
M_{ux} [ft-lb]: 0
M_{uy} [ft-lb]: 0
M_{uz} [ft-lb]: 0

<Figure 1>

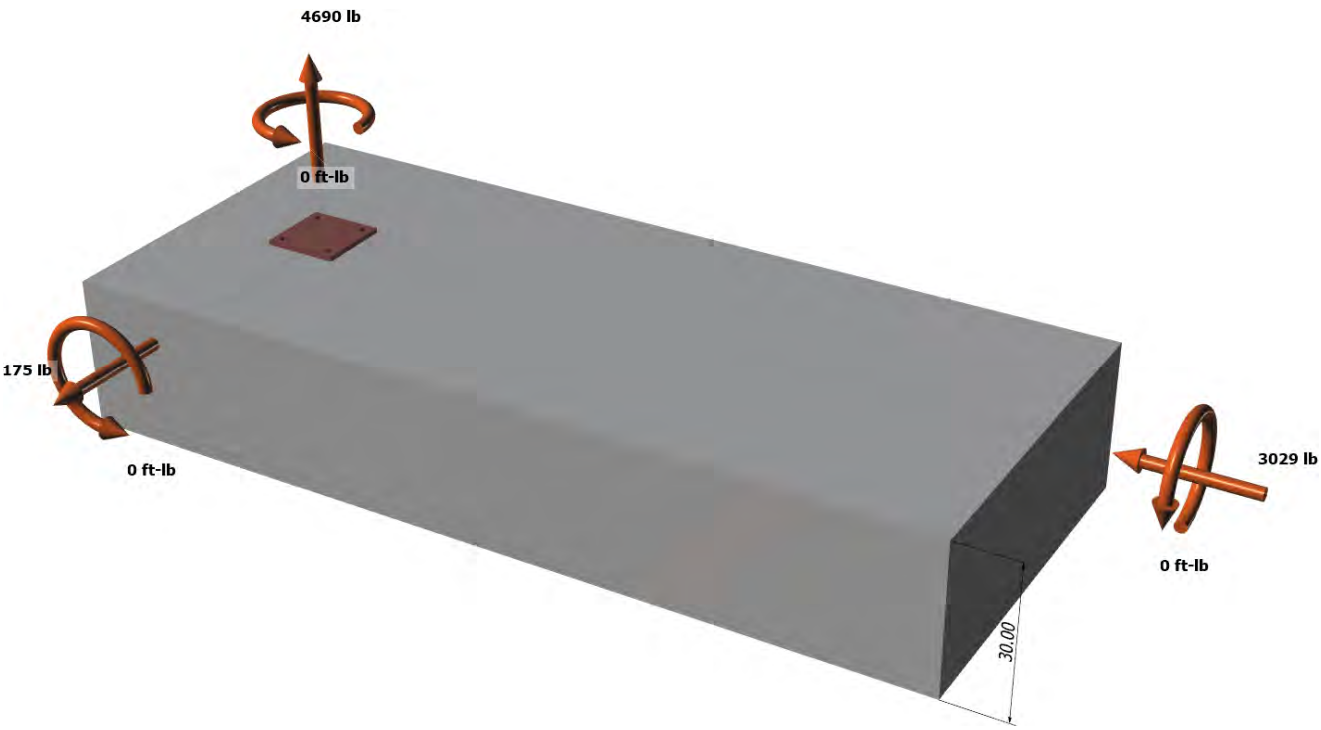

<Figure 2>

3. Resulting Anchor Forces

Anchor	Tension load, N_{ua} (lb)	Shear load x, V_{uax} (lb)	Shear load y, V_{uay} (lb)	Shear load combined, $\sqrt{(V_{uax})^2+(V_{uay})^2}$ (lb)
1	1172.5	43.7	-757.3	758.5
2	1172.5	43.7	-757.3	758.5
3	1172.5	43.7	-757.3	758.5
4	1172.5	43.7	-757.3	758.5
Sum	4690.0	175.0	-3029.0	3034.1

Maximum concrete compression strain (‰): 0.00
Maximum concrete compression stress (psi): 0
Resultant tension force (lb): 4690
Resultant compression force (lb): 0
Eccentricity of resultant tension forces in x-axis, e'_{Nx} (inch): 0.00
Eccentricity of resultant tension forces in y-axis, e'_{Ny} (inch): 0.00
Eccentricity of resultant shear forces in x-axis, e'_{Vx} (inch): 0.00
Eccentricity of resultant shear forces in y-axis, e'_{Vy} (inch): 0.00

<Figure 3>

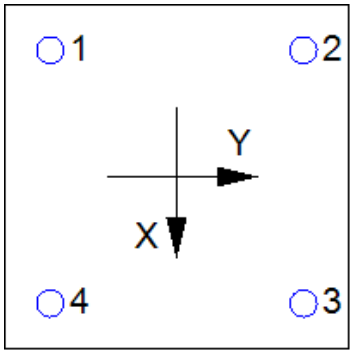

4. Steel Strength of Anchor in Tension (Sec. 17.4.1)

N_{sa} (lb)	ϕ	ϕN_{sa} (lb)
4525	0.75	3394

5. Concrete Breakout Strength of Anchor in Tension (Sec. 17.4.2)

$N_b = k_c \lambda_a \sqrt{f'_c} h_{ef}^{1.5}$ (Eq. 17.4.2.2a)

k_c	λ_a	f'_c (psi)	h_{ef} (in)	N_b (lb)
17.0	1.00	2500	6.000	12492

$\phi N_{cbg} = \phi (A_{Nc} / A_{Nco}) \Psi_{ec,N} \Psi_{ed,N} \Psi_{c,N} \Psi_{cp,N} N_b$ (Sec. 17.3.1 & Eq. 17.4.2.1b)

A_{Nc} (in^2)	A_{Nco} (in^2)	$c_{a,min}$ (in)	$\Psi_{ec,N}$	$\Psi_{ed,N}$	$\Psi_{c,N}$	$\Psi_{cp,N}$	N_b (lb)	ϕ	ϕN_{cbg} (lb)
424.63	324.00	7.25	1.000	0.942	1.00	1.000	12492	0.65	10021

6. Adhesive Strength of Anchor in Tension (Sec. 17.4.5)

$\tau_{k,cr} = \tau_{k,cr} f_{short\text{-}term} K_{sat} (f'_c / 2{,}500)^n$

$\tau_{k,cr}$ (psi)	$f_{short\text{-}term}$	K_{sat}	f'_c (psi)	n	$\tau_{k,cr}$ (psi)
1346	1.00	1.00	2500	0.24	1346

$N_{ba} = \lambda_a \tau_{cr} \pi d_a h_{ef}$ (Eq. 17.4.5.2)

λ_a	τ_{cr} (psi)	d_a (in)	h_{ef} (in)	N_{ba} (lb)
1.00	1346	0.38	6.000	9514

$\phi N_{ag} = \phi (A_{Na} / A_{Na0}) \Psi_{ec,Na} \Psi_{ed,Na} \Psi_{cp,Na} N_{ba}$ (Sec. 17.3.1 & Eq. 17.4.5.1b)

A_{Na} (in^2)	A_{Na0} (in^2)	c_{Na} (in)	$c_{a,min}$ (in)	$\Psi_{ec,Na}$	$\Psi_{ed,Na}$	$\Psi_{cp,Na}$	N_{ba}(lb)	ϕ	ϕN_{ag} (lb)
198.45	112.09	5.29	7.25	1.000	1.000	1.000	9514	0.55	9265

8. Steel Strength of Anchor in Shear (Sec. 17.5.1)

V_{sa} (lb)	ϕ_{grout}	ϕ	$\phi_{grout}\phi V_{sa}$ (lb)
2715	1.0	0.65	1765

9. Concrete Breakout Strength of Anchor in Shear (Sec. 17.5.2)

Shear perpendicular to edge in x-direction:

$V_{bx} = \min|7(l_e / d_a)^{0.2}\sqrt{d_a}\lambda_a\sqrt{f'_c}c_{a1}^{1.5};\ 9\lambda_a\sqrt{f'_c}c_{a1}^{1.5}|$ (Eq. 17.5.2.2a & Eq. 17.5.2.2b)

l_e (in)	d_a (in)	λ_a	f'_c (psi)	c_{a1} (in)	V_{bx} (lb)
3.00	0.375	1.00	2500	13.75	16564

$\phi V_{cbgx} = \phi\,(A_{Vc} / A_{Vco})\Psi_{ec,V}\Psi_{ed,V}\Psi_{c,V}\Psi_{h,V}V_{bx}$ (Sec. 17.3.1 & Eq. 17.5.2.1b)

A_{Vc} (in^2)	A_{Vco} (in^2)	$\Psi_{ec,V}$	$\Psi_{ed,V}$	$\Psi_{c,V}$	$\Psi_{h,V}$	V_{bx} (lb)	ϕ	ϕV_{cbgx} (lb)
647.11	850.78	1.000	0.805	1.000	1.000	16564	0.70	7103

Shear perpendicular to edge in y-direction:

$V_{by} = \min|7(l_e / d_a)^{0.2}\sqrt{d_a}\lambda_a\sqrt{f'_c}c_{a1}^{1.5};\ 9\lambda_a\sqrt{f'_c}c_{a1}^{1.5}|$ (Eq. 17.5.2.2a & Eq. 17.5.2.2b)

l_e (in)	d_a (in)	λ_a	f'_c (psi)	c_{a1} (in)	V_{by} (lb)
3.00	0.375	1.00	2500	10.75	11450

$\phi V_{cbgy} = \phi\,(A_{Vc} / A_{Vco})\Psi_{ec,V}\Psi_{ed,V}\Psi_{c,V}\Psi_{h,V}V_{by}$ (Sec. 17.3.1 & Eq. 17.5.2.1b)

A_{Vc} (in^2)	A_{Vco} (in^2)	$\Psi_{ec,V}$	$\Psi_{ed,V}$	$\Psi_{c,V}$	$\Psi_{h,V}$	V_{by} (lb)	ϕ	ϕV_{cbgy} (lb)
387.00	520.03	1.000	0.891	1.000	1.000	11450	0.70	5313

Shear parallel to edge in x-direction:

$V_{by} = \min|7(l_e / d_a)^{0.2}\sqrt{d_a}\lambda_a\sqrt{f'_c}c_{a1}^{1.5};\ 9\lambda_a\sqrt{f'_c}c_{a1}^{1.5}|$ (Eq. 17.5.2.2a & Eq. 17.5.2.2b)

l_e (in)	d_a (in)	λ_a	f'_c (psi)	c_{a1} (in)	V_{by} (lb)
3.00	0.375	1.00	2500	7.25	6342

$\phi V_{cbgx} = \phi\,(2)(A_{Vc} / A_{Vco})\Psi_{ec,V}\Psi_{ed,V}\Psi_{c,V}\Psi_{h,V}V_{by}$ (Sec. 17.3.1, 17.5.2.1(c) & Eq. 17.5.2.1b)

A_{Vc} (in^2)	A_{Vco} (in^2)	$\Psi_{ec,V}$	$\Psi_{ed,V}$	$\Psi_{c,V}$	$\Psi_{h,V}$	V_{by} (lb)	ϕ	ϕV_{cbgx} (lb)
261.00	236.53	1.000	1.000	1.000	1.000	6342	0.70	9797

Shear parallel to edge in y-direction:

$V_{bx} = \min|7(l_e / d_a)^{0.2}\sqrt{d_a}\lambda_a\sqrt{f'_c}c_{a1}^{1.5};\ 9\lambda_a\sqrt{f'_c}c_{a1}^{1.5}|$ (Eq. 17.5.2.2a & Eq. 17.5.2.2b)

l_e (in)	d_a (in)	λ_a	f'_c (psi)	c_{a1} (in)	V_{bx} (lb)
3.00	0.375	1.00	2500	10.25	10661

$\phi V_{cbgy} = \phi\,(2)(A_{Vc} / A_{Vco})\Psi_{ec,V}\Psi_{ed,V}\Psi_{c,V}\Psi_{h,V}V_{bx}$ (Sec. 17.3.1, 17.5.2.1(c) & Eq. 17.5.2.1b)

A_{Vc} (in^2)	A_{Vco} (in^2)	$\Psi_{ec,V}$	$\Psi_{ed,V}$	$\Psi_{c,V}$	$\Psi_{h,V}$	V_{bx} (lb)	ϕ	ϕV_{cbgy} (lb)
401.67	472.78	1.000	1.000	1.000	1.000	10661	0.70	12680

10. Concrete Pryout Strength of Anchor in Shear (Sec. 17.5.3)

$\phi V_{cpg} = \phi \min|k_{cp}N_{ag}\ ;\ k_{cp}N_{cbg}| = \phi \min|k_{cp}(A_{Na} / A_{Na0})\Psi_{ec,Na}\Psi_{ed,Na}\Psi_{cp,Na}N_{ba}\ ;\ k_{cp}(A_{Nc} / A_{Nco})\Psi_{ec,N}\Psi_{ed,N}\Psi_{c,N}\Psi_{cp,N}N_b|$ (Sec. 17.3.1 & Eq. 17.5.3.1b)

k_{cp}	A_{Na} (in^2)	A_{Na0} (in^2)	$\Psi_{ed,Na}$	$\Psi_{ec,Na}$	$\Psi_{cp,Na}$	N_{ba} (lb)	N_a (lb)
2.0	198.45	112.09	1.000	1.000	1.000	9514	16845

A_{Nc} (in^2)	A_{Nco} (in^2)	$\Psi_{ec,N}$	$\Psi_{ed,N}$	$\Psi_{c,N}$	$\Psi_{cp,N}$	N_b (lb)	N_{cb} (lb)	ϕ
424.63	324.00	1.000	0.942	1.000	1.000	12492	15417	0.70

ϕV_{cpg} (lb)
21584

11. Results

Interaction of Tensile and Shear Forces (Sec. R17.6)

Tension	Factored Load, N_{ua} (lb)	Design Strength, ϕN_n (lb)	Ratio	Status
Steel	1173	3394	0.35	Pass
Concrete breakout	4690	10021	0.47	Pass
Adhesive	**4690**	**9265**	**0.51**	**Pass (Governs)**

Shear	Factored Load, V_{ua} (lb)	Design Strength, ϕV_n (lb)	Ratio	Status
Steel	759	1765	0.43	Pass
T Concrete breakout x+	175	7103	0.02	Pass
T Concrete breakout y-	3029	5313	0.57	Pass
|| Concrete breakout y-	87	9797	0.01	Pass
|| Concrete breakout x-	1515	12680	0.12	Pass
Concrete breakout, combined	**-**	**-**	**0.57**	**Pass (Governs)**
Pryout	3034	21584	0.14	Pass

Interaction check	$(N_{ua}/\phi N_{ua})^{5/3}$	$(V_{ua}/\phi V_{ua})^{5/3}$	Combined Ratio	Permissible	Status
Sec. R17.6	0.32	0.39	71.4%	1.0	Pass

SET-3G w/ 3/8"Ø F1554 Gr. 36 with hef = 6.000 inch meets the selected design criteria.

12. Warnings

- Designer must exercise own judgement to determine if this design is suitable.

- Refer to manufacturer's product literature for hole cleaning and installation instructions.

Framing Analysis

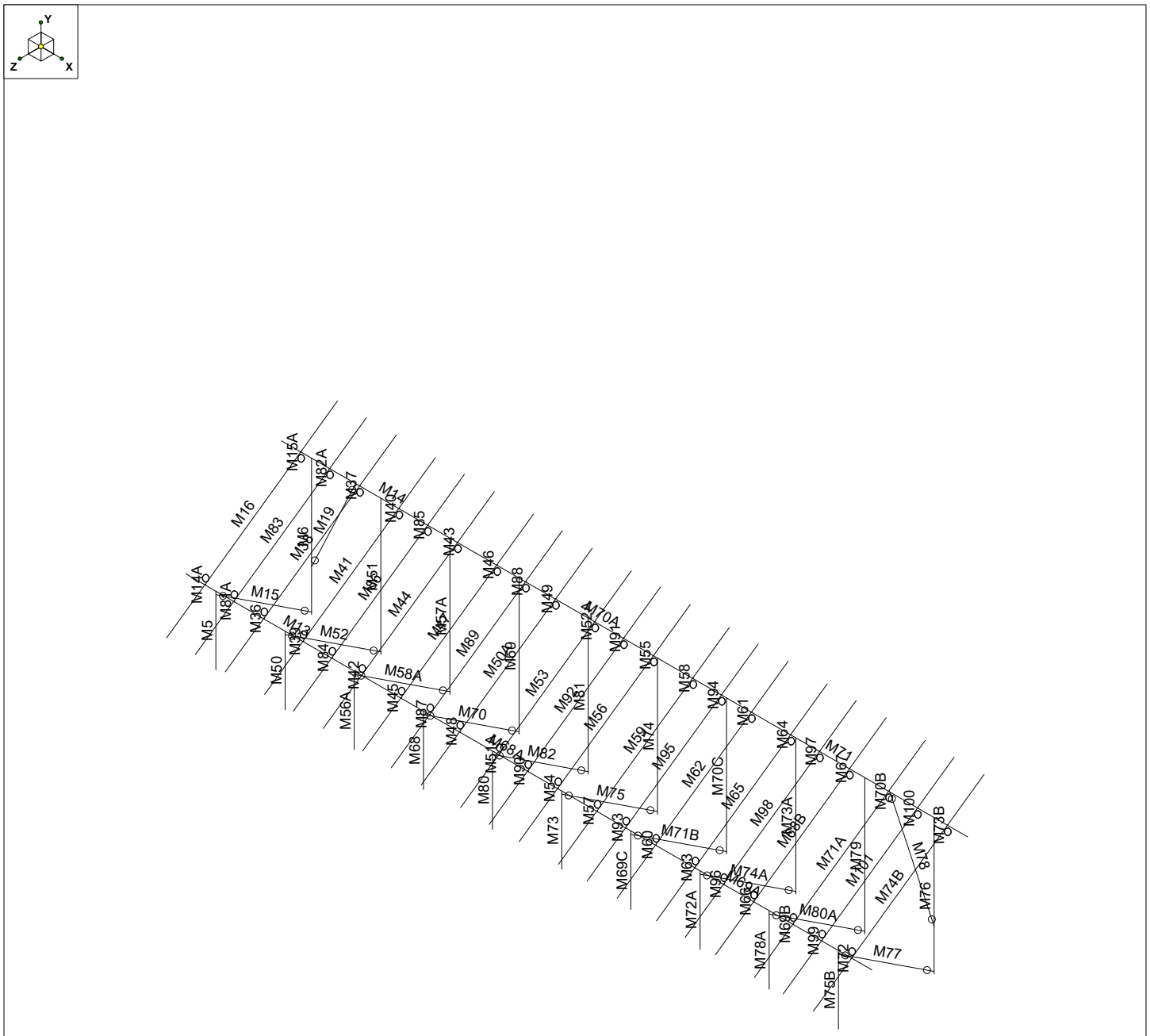

Vector Structural Engineeri...		SK - 4
STB	Ground Mount	Apr 6, 2021 at 12:45 PM
U2716.115.191		Sunmodo Sunturf A6 v3 85x45.r3d

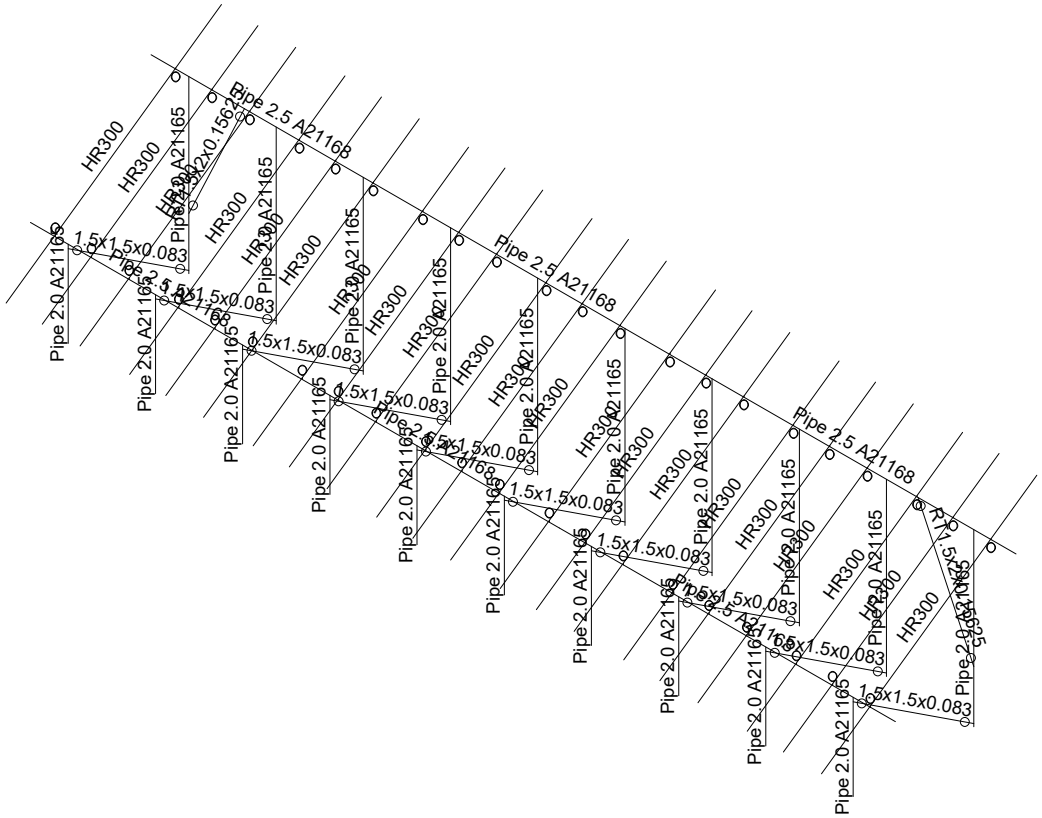

Vector Structural Engineeri...		SK - 5
STB	Ground Mount	Apr 6, 2021 at 12:46 PM
U2716.115.191		Sunmodo Sunturf A6 v3 85x45.r3d

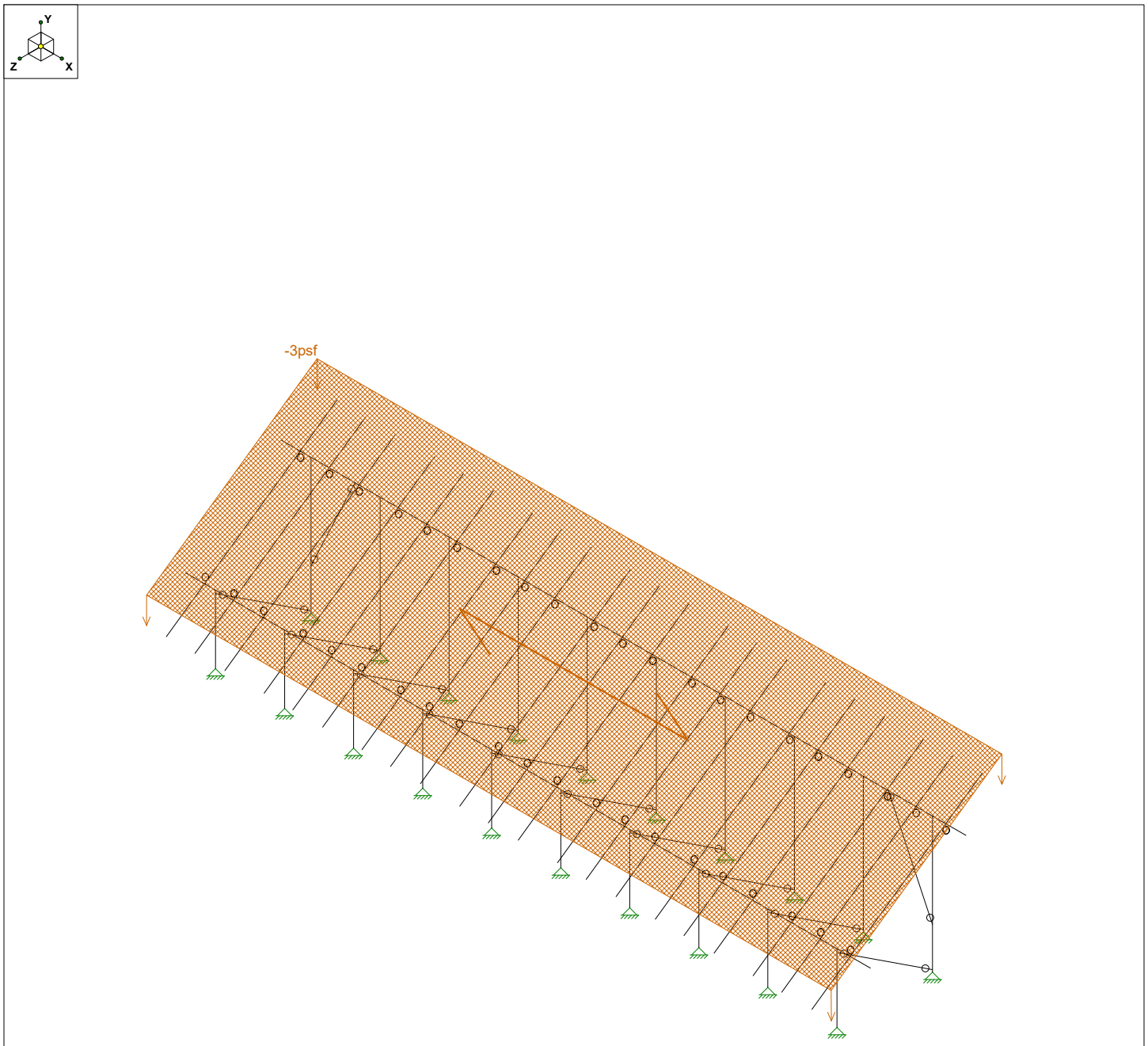

Loads: BLC 2, Solar Panel Weight

Vector Structural Engineeri...		SK - 6
STB	Ground Mount	Apr 6, 2021 at 12:46 PM
U2716.115.191		Sunmodo Sunturf A6 v3 85x45.r3d

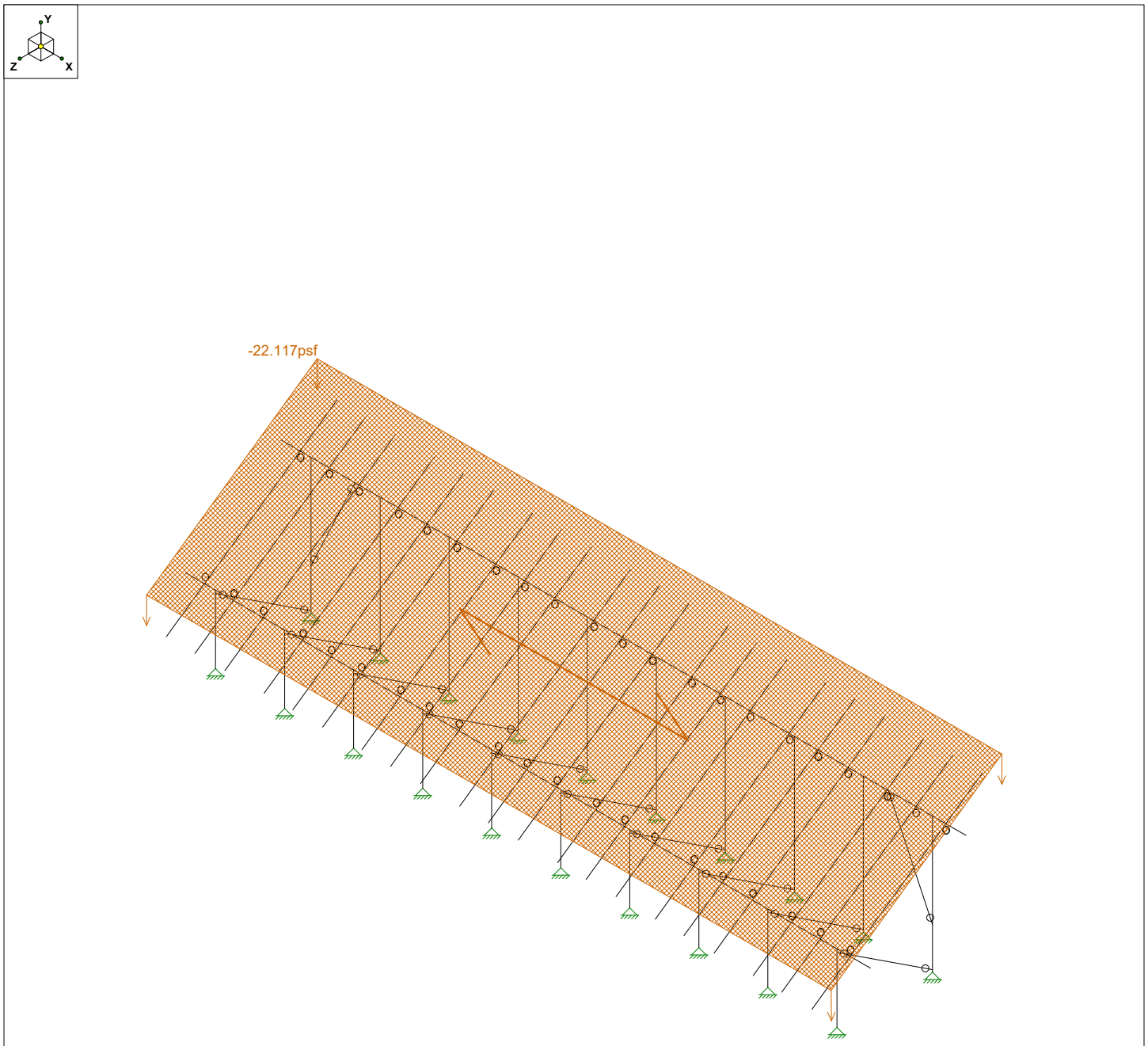

Loads: BLC 3, Roof Live/Snow

Vector Structural Engineeri...		SK - 7
STB	Ground Mount	Apr 6, 2021 at 12:46 PM
U2716.115.191		Sunmodo Sunturf A6 v3 85x45.r3d

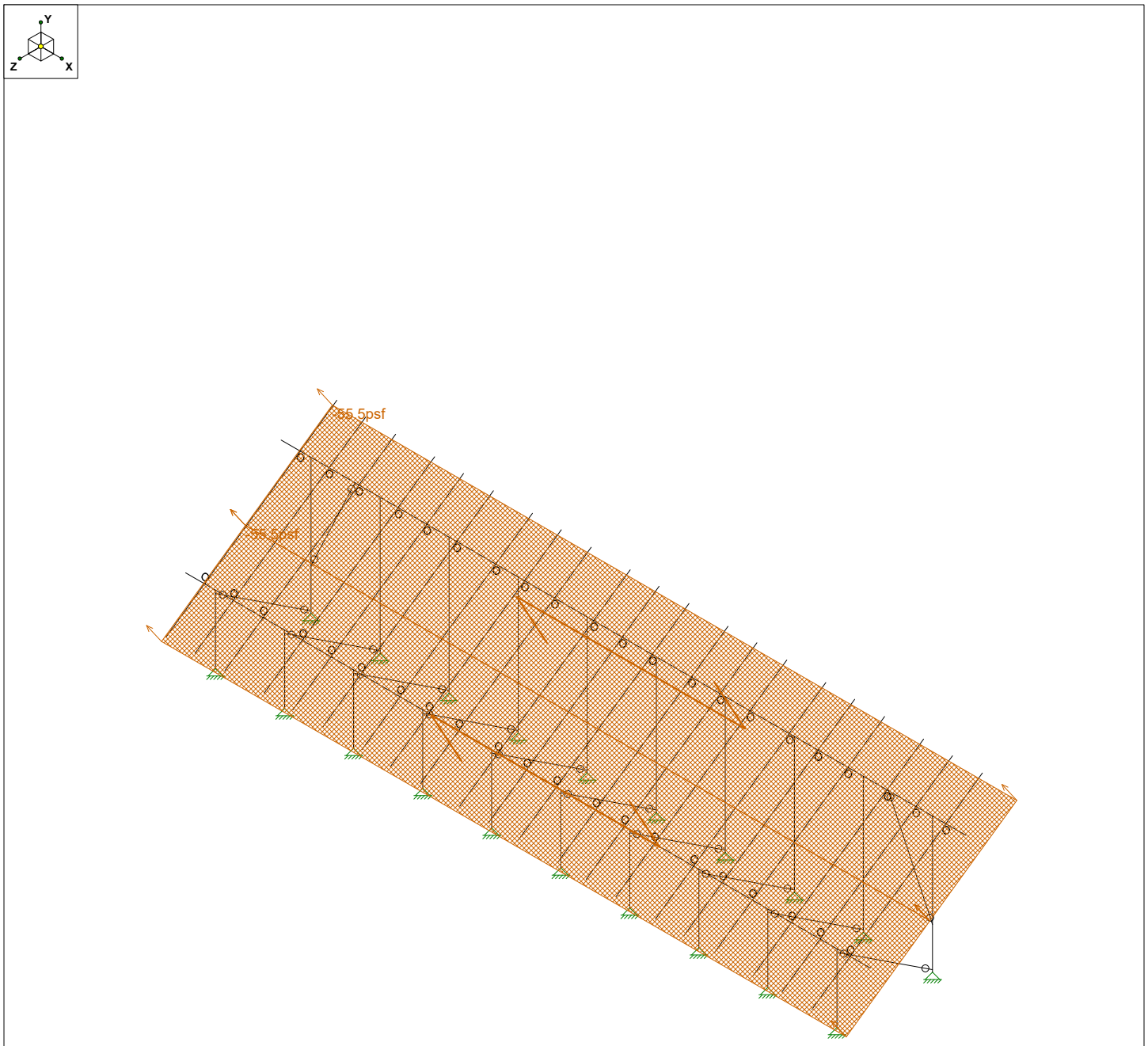

Loads: BLC 4, Wind A 0 deg

Vector Structural Engineeri...		SK - 8
STB	Ground Mount	Apr 6, 2021 at 12:46 PM
U2716.115.191		Sunmodo Sunturf A6 v3 85x45.r3d

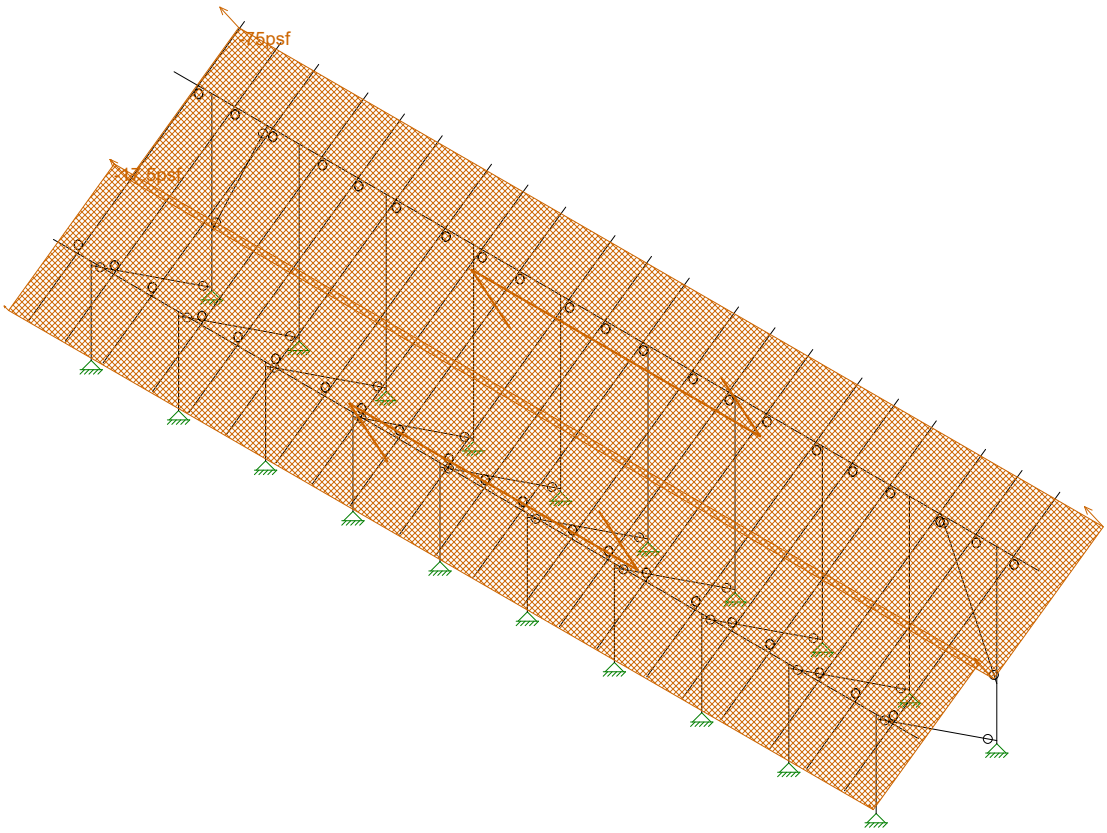

Loads: BLC 5, Wind B 0 deg

Vector Structural Engineeri...		SK - 9
STB	Ground Mount	Apr 6, 2021 at 12:46 PM
U2716.115.191		Sunmodo Sunturf A6 v3 85x45.r3d

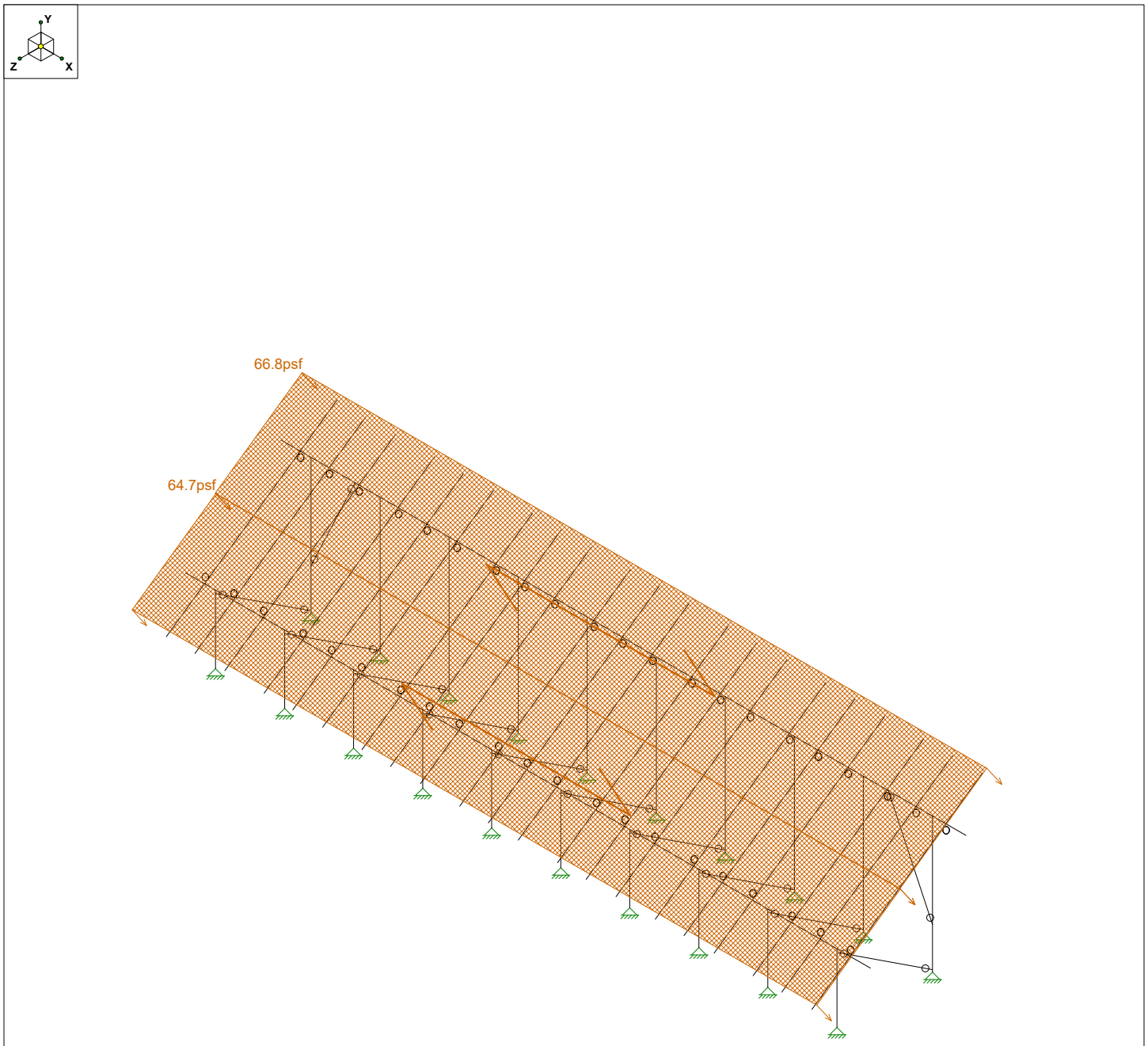

Loads: BLC 6, Wind A 180 deg

Vector Structural Engineeri...		SK - 10
STB	Ground Mount	Apr 6, 2021 at 12:46 PM
U2716.115.191		Sunmodo Sunturf A6 v3 85x45.r3d

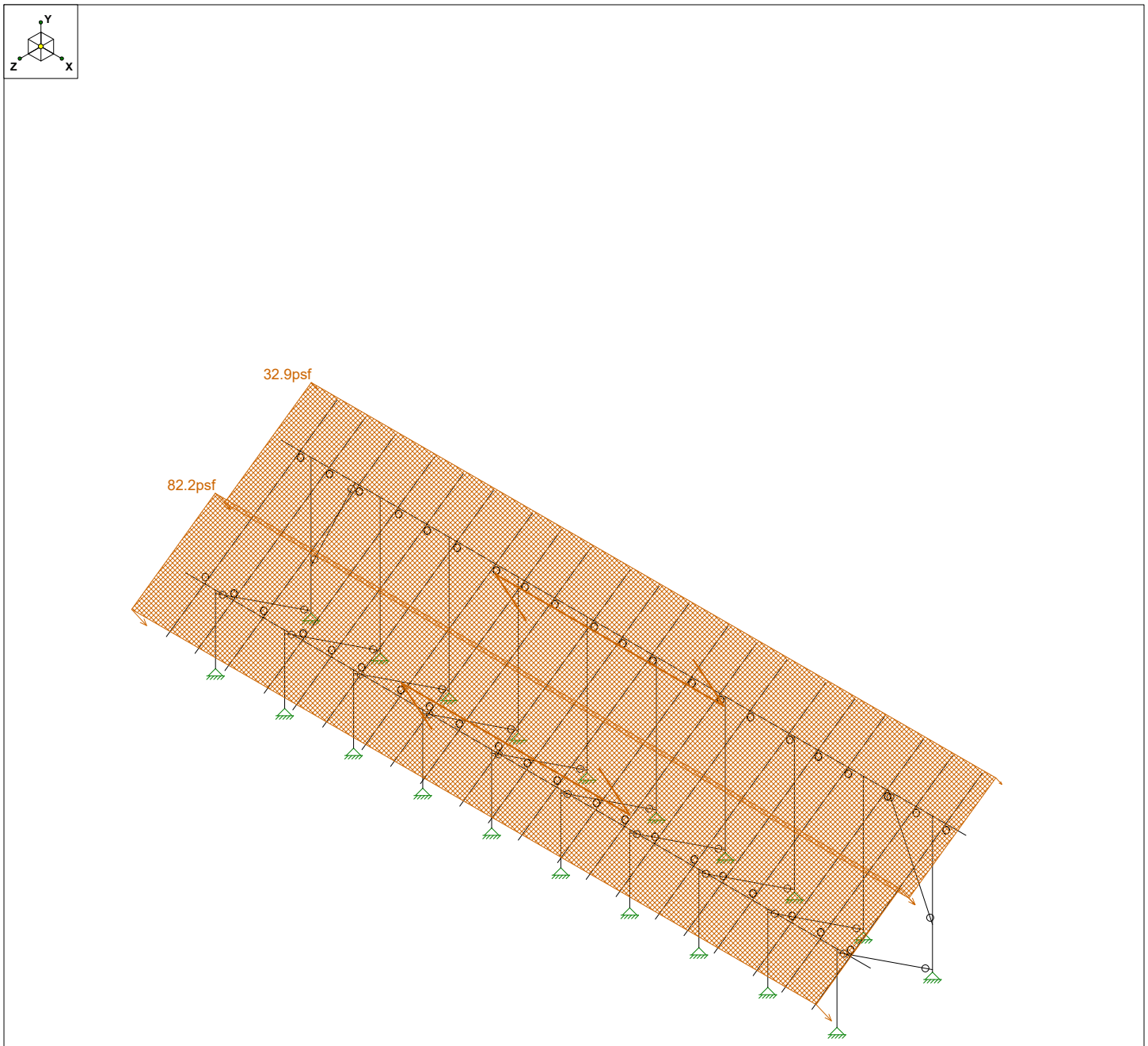

Loads: BLC 7, Wind B 180 deg

Vector Structural Engineeri...		SK - 11
STB	Ground Mount	Apr 6, 2021 at 12:46 PM
U2716.115.191		Sunmodo Sunturf A6 v3 85x45.r3d

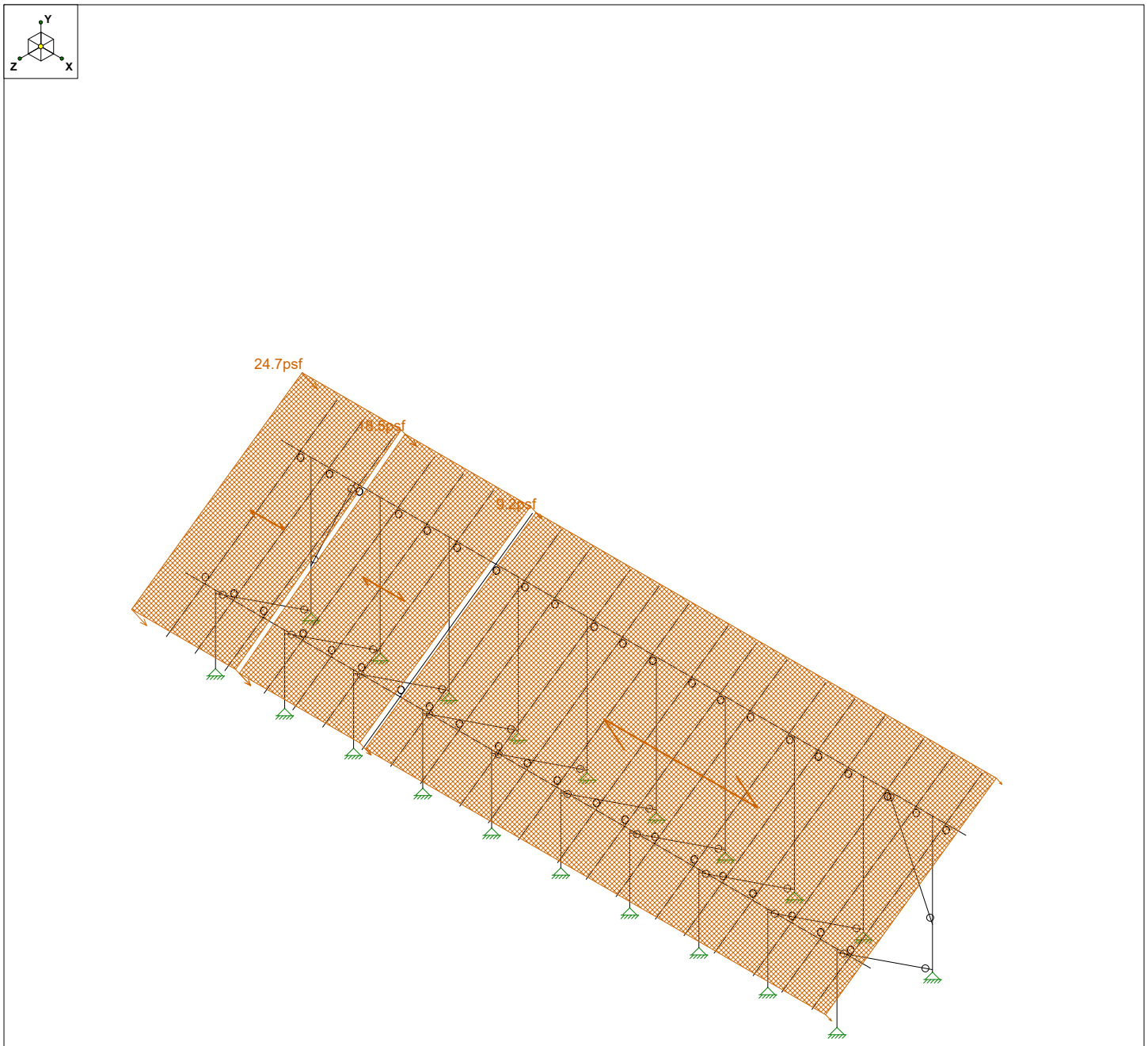

Loads: BLC 8, Wind A 90

Vector Structural Engineeri...		SK - 12
STB	Ground Mount	Apr 6, 2021 at 12:46 PM
U2716.115.191		Sunmodo Sunturf A6 v3 85x45.r3d

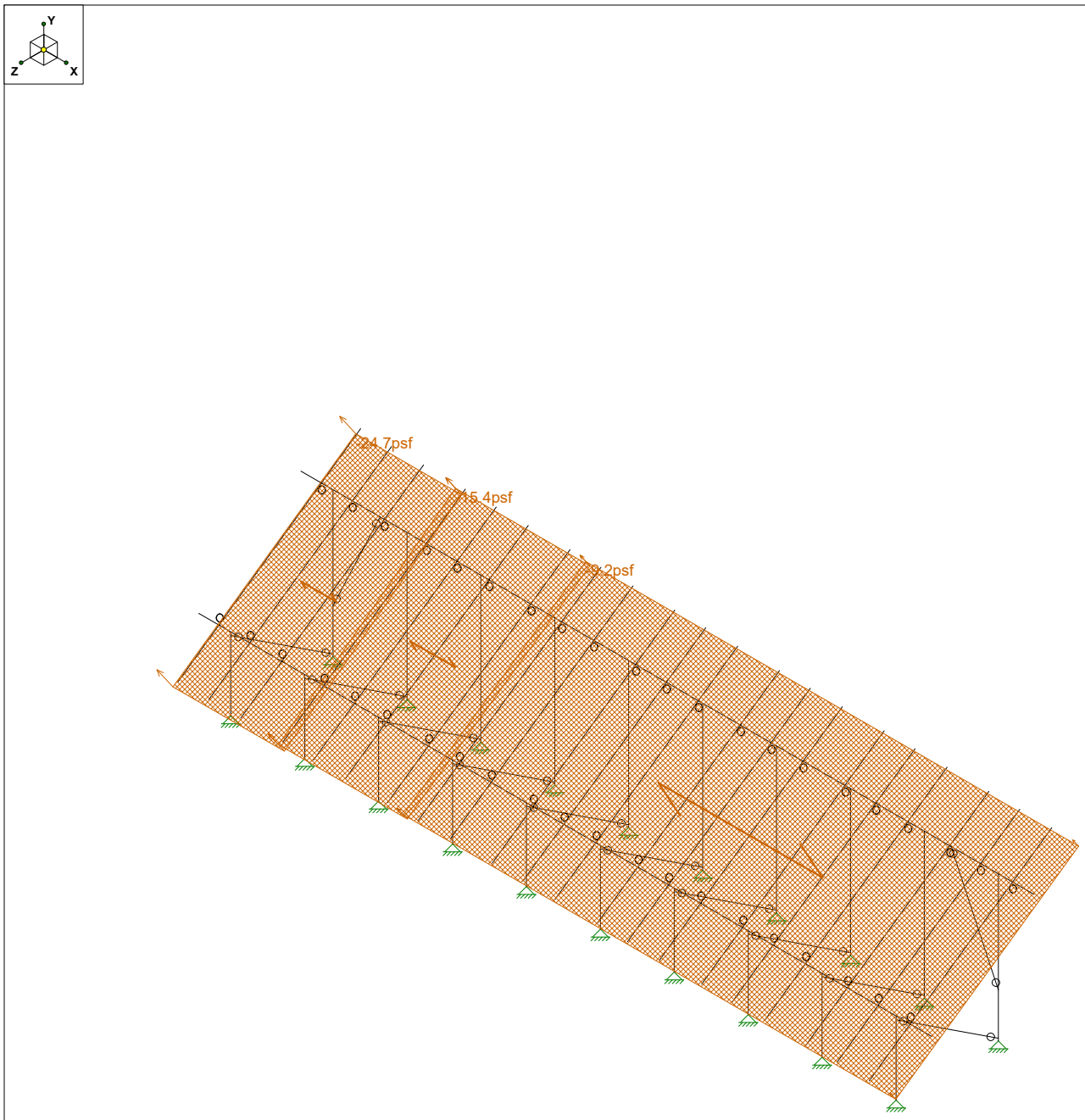

Loads: BLC 9, Wind B 90

Vector Structural Engineeri...		SK - 13
STB	Ground Mount	Apr 6, 2021 at 12:47 PM
U2716.115.191		Sunmodo Sunturf A6 v3 85x45.r3d

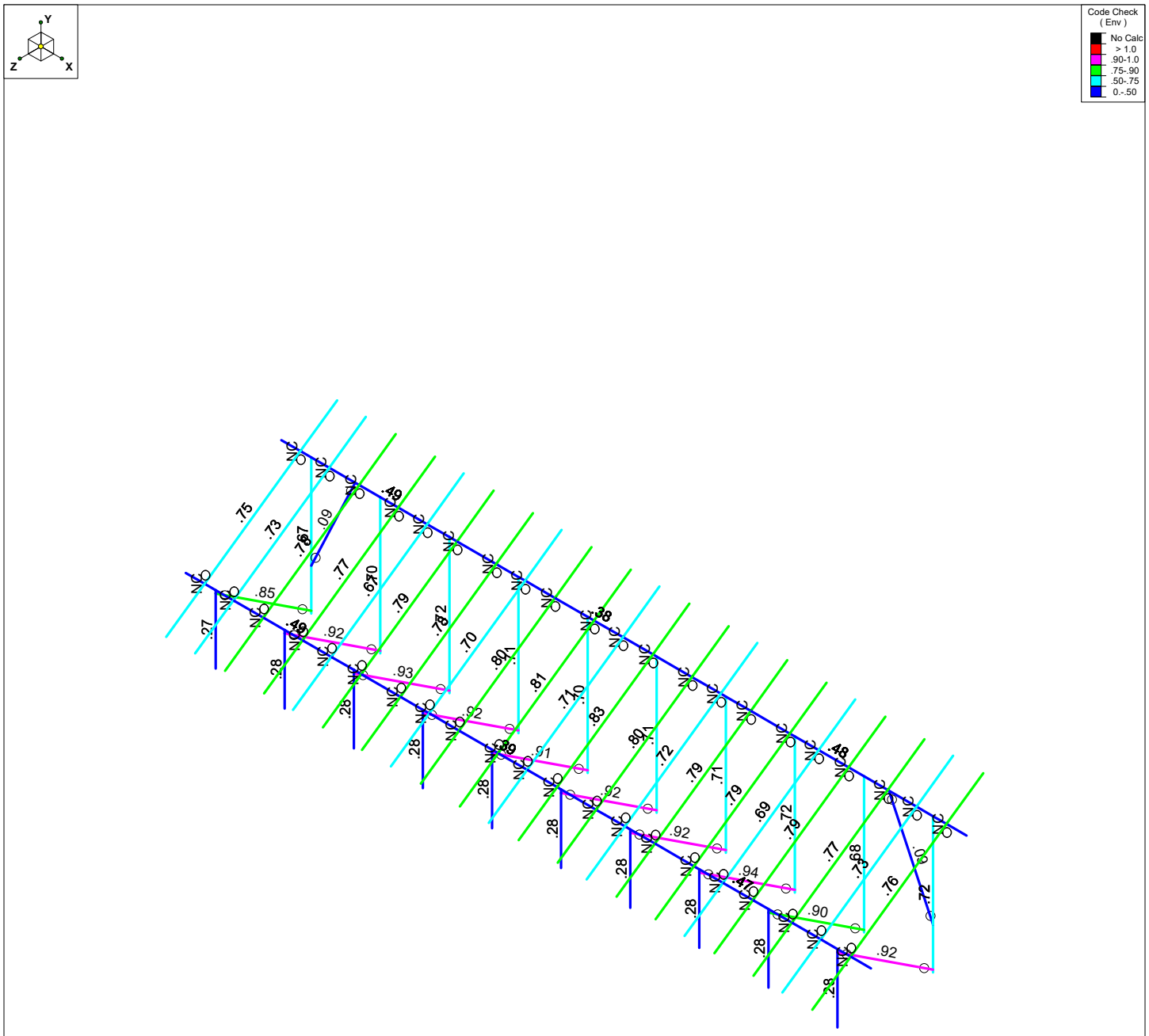

Member Code Checks Displayed (Enveloped)
Envelope Only Solution

Vector Structural Engineeri...		SK - 3
STB	Ground Mount	Apr 6, 2021 at 12:45 PM
U2716.115.191		Sunmodo Sunturf A6 v3 85x45.r3d

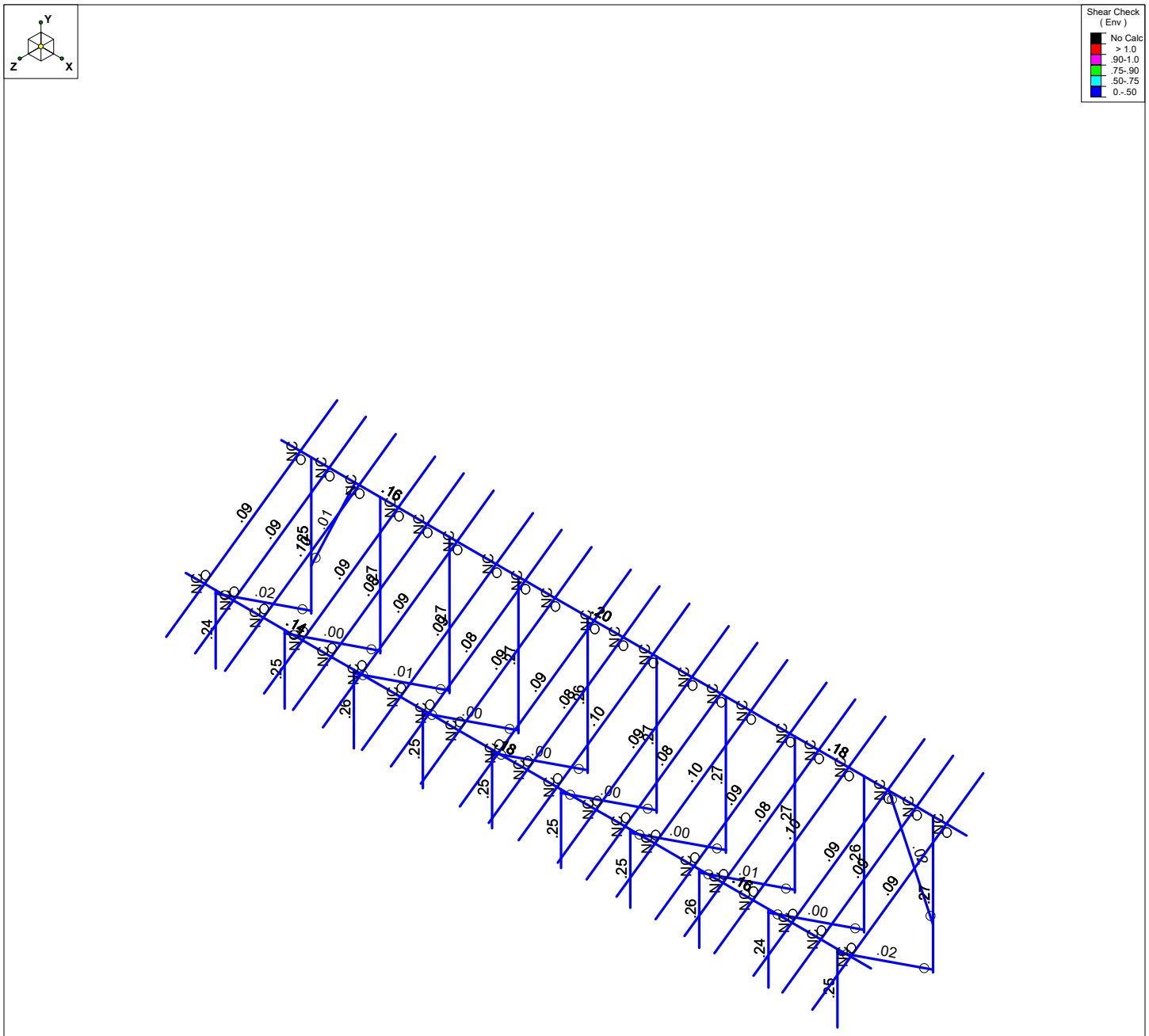

Member Shear Checks Displayed (Enveloped)
Envelope Only Solution

Vector Structural Engineeri...		SK - 2
STB	Ground Mount	Apr 6, 2021 at 12:44 PM
U2716.115.191		Sunmodo Sunturf A6 v3 85x45.r3d

(Global) Model Settings

Display Sections for Member Calcs	5
Max Internal Sections for Member Calcs	97
Include Shear Deformation?	Yes
Increase Nailing Capacity for Wind?	Yes
Include Warping?	Yes
Trans Load Btwn Intersecting Wood Wall?	Yes
Area Load Mesh (in^2)	144
Merge Tolerance (in)	.12
P-Delta Analysis Tolerance	0.50%
Include P-Delta for Walls?	Yes
Automatically Iterate Stiffness for Walls?	Yes
Max Iterations for Wall Stiffness	3
Gravity Acceleration (in/sec^2)	386.4
Wall Mesh Size (in)	24
Eigensolution Convergence Tol. (1.E-)	4
Vertical Axis	Y
Global Member Orientation Plane	XZ
Static Solver	Sparse Accelerated
Dynamic Solver	Accelerated Solver

Hot Rolled Steel Code	AISC 14th(360-10): ASD
Adjust Stiffness?	Yes(Iterative)
RISAConnection Code	AISC 14th(360-10): ASD
Cold Formed Steel Code	AISI S100-16: ASD
Wood Code	AWC NDS-15: ASD
Wood Temperature	< 100F
Concrete Code	ACI 318-14
Masonry Code	ACI 530-13: ASD
Aluminum Code	AA ADM1-15: ASD - Building
Stainless Steel Code	AISC 14th(360-10): ASD
Adjust Stiffness?	Yes(Iterative)

Number of Shear Regions	4
Region Spacing Increment (in)	4
Biaxial Column Method	Exact Integration
Parme Beta Factor (PCA)	.65
Concrete Stress Block	Rectangular
Use Cracked Sections?	Yes
Use Cracked Sections Slab?	No
Bad Framing Warnings?	No
Unused Force Warnings?	Yes
Min 1 Bar Diam. Spacing?	No
Concrete Rebar Set	REBAR_SET_ASTMA615
Min % Steel for Column	1
Max % Steel for Column	8

(Global) Model Settings, Continued

Seismic Code	ASCE 7-10
Seismic Base Elevation (in)	15600
Add Base Weight?	Yes
Ct X	.02
Ct Z	.02
T X (sec)	Not Entered
T Z (sec)	Not Entered
R X	3
R Z	3
Ct Exp. X	.75
Ct Exp. Z	.75
SD1	1
SDS	1
S1	1
TL (sec)	5
Risk Cat	I or II
Drift Cat	Other
Om Z	1
Om X	1
Cd Z	4
Cd X	4
Rho Z	1
Rho X	1

Hot Rolled Steel Properties

	Label	E [ksi]	G [ksi]	Nu	Therm (/1E5 F)	Density[lb/ft^3]	Yield[psi]	Ry	Fu[psi]	Rt
1	A992	29000	11154	.3	.65	490	50000	1.1	65000	1.1
2	A36 Gr.36	29000	11154	.3	.65	490	36000	1.5	58000	1.2
3	A572 Gr.50	29000	11154	.3	.65	490	50000	1.1	65000	1.1
4	A500 Gr.B R...	29000	11154	.3	.65	527	42000	1.4	58000	1.3
5	A500 Gr.B Re...	29000	11154	.3	.65	527	46000	1.4	58000	1.3
6	A53 Gr.B	29000	11154	.3	.65	490	35000	1.6	60000	1.2
7	A1085	29000	11154	.3	.65	490	50000	1.4	65000	1.3

Aluminum Properties

	Label	E [ksi]	G [ksi]	Nu	Therm (...	Density[...	Table B.4	kt	Ftu[psi]	Fty[psi]	Fcy[psi]	Fsu[psi]	Ct
1	3003-H14	10100	3787.5	.33	1.3	172.8	Table B.4-1	1	19000	16000	13000	12000	141
2	6061-T6	10100	3787.5	.33	1.3	172.8	Table B.4-2	1	38000	35000	35000	24000	141
3	6063-T5	10100	3787.5	.33	1.3	172.8	Table B.4-2	1	22000	16000	16000	13000	141
4	6063-T6	10100	3787.5	.33	1.3	172.8	Table B.4-2	1	30000	25000	25000	19000	141
5	5052-H34	10200	3787.5	.33	1.3	172.8	Table B.4-1	1	34000	26000	24000	20000	141
6	6061-T6 W	10100	3787.5	.33	1.3	172.8	Table B.4-1	1	24000	15000	15000	15000	141
7	6005-T5	10100	3787.5	.33	1.3	172.8	Table B.4-1	1	38000	35000	35000	24000	141

Hot Rolled Steel Section Sets

	Label	Shape	Type	Design List	Material	Design R...	A [in2]	Iyy [in4]	Izz [in4]	J [in4]
1	Post	Pipe 2.0 A21165	Column	Pipe	A572 Gr.50	Typical	.776	.499	.499	.998
2	Cross Beam	Pipe 2.5 A21168	Beam	Wide Flange	A572 Gr.50	Typical	.947	.907	.907	1.814
3	Diagonal Brace	1.5x1.5x0.083	HBrace	SquareTube	A572 Gr.50	Typical	.47	.158	.158	.236

Aluminum Section Sets

	Label	Shape	Type	Design List	Material	Design R...	A [in2]	Iyy [in4]	Izz [in4]	J [in4]
1	AL Posts	2.375ODX0.188	Column	Pipe	6005-T5	Typical	1.29	.778	.778	1.54
2	AL Brace	RT1.5x2x0.15625	VBrace	Rectangular Tubes	6005-T5	Typical	.996	.327	.524	.602
3	AL Rails	HR300	Beam	Rectangular Tubes	6005-T5	Typical	.74	.253	.727	.578
4	AL Cross Beam	Cross Rail	Beam	Rectangular Tubes	6005-T5	Typical	1.909	1.97	4.366	4.017

Member Area Loads (BLC 2 : Solar Panel Weight)

	Joint A	Joint B	Joint C	Joint D	Direction	Distribution	Magnitude[psf]
1	N197	N200	N199	N196	Y	A-B	-3

Member Area Loads (BLC 3 : Roof Live/Snow)

	Joint A	Joint B	Joint C	Joint D	Direction	Distribution	Magnitude[psf]
1	N197	N200	N199	N196	PY	A-B	-27

Member Area Loads (BLC 4 : Wind A 0 deg)

	Joint A	Joint B	Joint C	Joint D	Direction	Distribution	Magnitude[psf]
1	N197	N200	N201	N198	Perp	A-B	-55.5
2	N198	N201	N199	N196	Perp	A-B	-55.5

Member Area Loads (BLC 5 : Wind B 0 deg)

	Joint A	Joint B	Joint C	Joint D	Direction	Distribution	Magnitude[psf]
1	N197	N200	N201	N198	Perp	A-B	-75
2	N198	N201	N199	N196	Perp	A-B	-17.5

Member Area Loads (BLC 6 : Wind A 180 deg)

	Joint A	Joint B	Joint C	Joint D	Direction	Distribution	Magnitude[psf]
1	N197	N200	N201	N198	Perp	A-B	66.8
2	N198	N201	N199	N196	Perp	A-B	64.7

Member Area Loads (BLC 7 : Wind B 180 deg)

	Joint A	Joint B	Joint C	Joint D	Direction	Distribution	Magnitude[psf]
1	N197	N200	N201	N198	Perp	A-B	32.9
2	N198	N201	N199	N196	Perp	A-B	82.2

Member Area Loads (BLC 8 : Wind A 90)

	Joint A	Joint B	Joint C	Joint D	Direction	Distribution	Magnitude[psf]
1	N197	N203	N202	N196	Perp	A-B	24.7
2	N203	N209	N208	N202	Perp	A-B	18.5
3	N209	N200	N199	N208	Perp	A-B	9.2

Member Area Loads (BLC 9 : Wind B 90)

	Joint A	Joint B	Joint C	Joint D	Direction	Distribution	Magnitude[psf]
1	N197	N203	N202	N196	Perp	A-B	-24.7
2	N203	N209	N208	N202	Perp	A-B	-15.4
3	N209	N200	N199	N208	Perp	A-B	-9.2

Basic Load Cases

	BLC Description	Category	X Gravity	Y Gravity	Z Gravity	Joint	Point	Distributed	Area(M...	Surface...
1	Self Weight	DL		-1.05						
2	Solar Panel Weight	DL							1	

Basic Load Cases (Continued)

	BLC Description	Category	X Gravity	Y Gravity	Z Gravity	Joint	Point	Distributed	Area(M...	Surface...
3	Roof Live/Snow	RLL							1	
4	Wind A 0 deg	OL1							2	
5	Wind B 0 deg	OL2							2	
6	Wind A 180 deg	OL3							2	
7	Wind B 180 deg	OL4							2	
8	Wind A 90	OL5							3	
9	Wind B 90	OL6							3	
10	BLC 2 Transient Area ...	None						45		
11	BLC 3 Transient Area ...	None						45		
12	BLC 4 Transient Area ...	None						148		
13	BLC 5 Transient Area ...	None						148		
14	BLC 6 Transient Area ...	None						148		
15	BLC 7 Transient Area ...	None						148		
16	BLC 8 Transient Area ...	None						176		
17	BLC 9 Transient Area ...	None						176		

Load Combinations

	Description	S...	PD...	SRSS	BLC	Fa...	BLC	Fa...	BLC	Fa...	B...	Fa...	B...	Fa...	B...	Fa...	B...	Fa...	B...	Fa...	B...	Fa...	B...	Fa...
1	1.0 D	Yes	Y		DL	1																		
2	1.0 D + 1.0 S	Yes	Y		DL	1	RLL	1																
3	1.0 D + 0.6 W1	Yes	Y		DL	1	RLL		OL1	.6														
4	1.0 D + 0.6 W2	Yes	Y		DL	1	RLL		OL2	.6														
5	1.0 D + 0.6 W3	Yes	Y		DL	1	RLL		OL3	.6														
6	1.0 D + 0.6 W4	Yes	Y		DL	1	RLL		OL4	.6														
7	1.0 D + 0.6 W5	Yes	Y		DL	1	RLL		OL5	.6														
8	1.0 D + 0.6 W6	Yes	Y		DL	1	RLL		OL6	.6														
9	1.0 D + 0.45 W1 + 0....	Yes	Y		DL	1	RLL	.75	OL1	.45														
10	1.0 D + 0.45 W2 + 0....	Yes	Y		DL	1	RLL	.75	OL2	.45														
11	1.0 D + 0.45 W3 + 0....	Yes	Y		DL	1	RLL	.75	OL3	.45														
12	1.0 D + 0.45 W4 + 0....	Yes	Y		DL	1	RLL	.75	OL4	.45														
13	1.0 D + 0.45 W5 + 0....	Yes	Y		DL	1	RLL	.75	OL5	.45														
14	1.0 D + 0.45 W6 + 0....	Yes	Y		DL	1	RLL	.75	OL6	.45														
15	0.6 D + 0.6 W1	Yes	Y		DL	.6	RLL		OL1	.6														
16	0.6 D + 0.6 W2	Yes	Y		DL	.6	RLL		OL2	.6														
17	0.6 D + 0.6 W3	Yes	Y		DL	.6	RLL		OL3	.6														
18	0.6 D + 0.6 W4	Yes	Y		DL	.6	RLL		OL4	.6														
19	0.6 D + 0.6 W5	Yes	Y		DL	.6	RLL		OL5	.6														
20	0.6 D + 0.6 W6	Yes	Y		DL	.6	RLL		OL6	.6														

Envelope Joint Reactions

	Joint		X [lb]	LC	Y [lb]	LC	Z [lb]	LC	MX [lb-ft]	LC	MY [lb...	LC	MZ [lb-ft]	LC
1	N2	max	12.504	12	1515.913	10	63.186	3	0	20	0	20	0	20
2		min	-5.739	20	-447.081	17	-74.286	5	0	1	0	1	0	1
3	N1	max	44.795	11	3042.099	5	1648.7...	5	0	20	0	20	0	20
4		min	-54.942	16	-2623.194	16	-1392....	3	0	1	0	1	0	1
5	N132	max	3.116	11	3174.474	5	1769.6...	5	0	20	0	20	0	20
6		min	-2.175	16	-2702.643	16	-1493....	3	0	1	0	1	0	1
7	N133	max	5.465	12	1620.557	10	66.42	3	0	20	0	20	0	20
8		min	-.668	15	-476.311	17	-78.229	5	0	1	0	1	0	1
9	N109	max	1.903	20	3128.056	5	1787.7...	5	0	20	0	20	0	20
10		min	-1.226	19	-2606.134	16	-1507....	3	0	1	0	1	0	1
11	N110A	max	4.986	20	1638.09	10	65.61	3	0	20	0	20	0	20
12		min	-4.3	7	-475.187	17	-77.455	5	0	1	0	1	0	1
13	N121	max	1.139	16	3243.508	5	1804.8...	5	0	20	0	20	0	20

Envelope Joint Reactions (Continued)

	Joint		X [lb]	LC	Y [lb]	LC	Z [lb]	LC	MX [lb-ft]	LC	MY [lb...	LC	MZ [lb-ft]	LC
14		min	-.686	2	-2782.706	16	-1524....	3	0	1	0	1	0	1
15	N122	max	3.582	15	1670.11	10	66.815	3	0	20	0	20	0	20
16		min	-5.68	11	-519.382	17	-78.576	5	0	1	0	1	0	1
17	N133B	max	1.785	11	3220.582	5	1792.2...	5	0	20	0	20	0	20
18		min	-1.077	16	-2747.849	16	-1512....	3	0	1	0	1	0	1
19	N134B	max	2.971	14	1654.738	10	66.758	3	0	20	0	20	0	20
20		min	-3.231	19	-485.752	17	-78.601	5	0	1	0	1	0	1
21	N151	max	2.618	16	3209.397	5	1792.6...	5	0	20	0	20	0	20
22		min	-2.238	11	-2738.929	16	-1513....	3	0	1	0	1	0	1
23	N152	max	2.166	15	1646.327	10	66.734	3	0	20	0	20	0	20
24		min	-8.033	12	-503.545	17	-78.503	5	0	1	0	1	0	1
25	N143A	max	1.683	16	3197.212	5	1777.6...	5	0	20	0	20	0	20
26		min	-1.059	5	-2724.362	16	-1500....	3	0	1	0	1	0	1
27	N144A	max	.28	15	1638.147	10	66.628	3	0	20	0	20	0	20
28		min	-3.887	12	-468.741	17	-78.502	5	0	1	0	1	0	1
29	N149A	max	1.684	11	3262.942	5	1815.7...	17	0	20	0	20	0	20
30		min	-.727	16	-2800.564	16	-1534....	3	0	1	0	1	0	1
31	N150A	max	4.316	12	1679.526	10	67.003	3	0	20	0	20	0	20
32		min	-3.253	15	-523.483	17	-78.77	5	0	1	0	1	0	1
33	N155B	max	52.671	16	3282.153	5	1780.0...	5	0	20	0	20	0	20
34		min	-43.679	11	-2824.397	16	-1503....	3	0	1	0	1	0	1
35	N156B	max	1.583	17	1634.667	10	66.27	3	0	20	0	20	0	20
36		min	-3.262	16	-487.586	17	-77.742	5	0	1	0	1	0	1
37	N161A	max	2.817	16	3036.427	5	1739.4...	5	0	20	0	20	0	20
38		min	-1.993	11	-2533.067	16	-1465....	3	0	1	0	1	0	1
39	N162A	max	1.663	15	1596.473	10	65.692	3	0	20	0	20	0	20
40		min	-4.993	12	-459.083	17	-77.695	5	0	1	0	1	0	1
41	Totals:	max	.009	20	33982.943	11	16930....	5						
42		min	-.01	13	-18339.354	15	-1428...	3						

Envelope AISC 14th(360-10): ASD Steel Code Checks

	Member	Shape	Code Check	Loc[in]	LC	Shear ...	Loc[in]	Dir	LC	Pnc/om [...	Pnt/om [lb]	Mnyy/om...	Mnzz/om...	Cb	Eqn
1	M5	Pipe 2.0 A2...	.268	56.574	5	.236	56.574		5	15634.075	23232.186	1397.505	1397.505	1....	H1-1b
2	M6	Pipe 2.0 A2...	.671	1.223	5	.247	0		5	5439	23232.186	1397.505	1397.505	1....	H1-1a
3	M13	Pipe 2.5 A2...	.488	86.25	12	.143	147....		5	11641.036	28358.413	2081.747	2081.747	1....	H1-1b
4	M14	Pipe 2.5 A2...	.491	86.25	11	.160	147....		11	11641.036	28358.413	2081.747	2081.747	1....	H1-1b
5	M15	1.5x1.5x0.083	.853	51.711	5	.023	99.285	y	11	2408.78	14085.15	624.421	624.421	1....	H1-1a
6	M80	Pipe 2.0 A2...	.280	56.574	5	.249	56.574		5	15634.075	23232.186	1397.505	1397.505	1....	H1-1b
7	M81	Pipe 2.0 A2...	.703	1.223	5	.264	0		5	5439	23232.186	1397.505	1397.505	1....	H1-1a
8	M82	1.5x1.5x0.083	.913	51.711	5	.004	99.285	y	10	2408.78	14085.15	624.421	624.421	1....	H1-1a
9	M50	Pipe 2.0 A2...	.278	56.574	5	.252	56.574		5	15634.075	23232.186	1397.505	1397.505	1....	H1-1b
10	M51	Pipe 2.0 A2...	.696	1.223	5	.267	0		5	5439	23232.186	1397.505	1397.505	1....	H1-1a
11	M52	1.5x1.5x0.083	.922	51.711	5	.005	0	y	8	2408.78	14085.15	624.421	624.421	1....	H1-1a
12	M56A	Pipe 2.0 A2...	.282	56.574	5	.255	56.574		5	15634.075	23232.186	1397.505	1397.505	1....	H1-1b
13	M57A	Pipe 2.0 A2...	.718	1.223	5	.269	0		5	5439	23232.186	1397.505	1397.505	1....	H1-1a
14	M58A	1.5x1.5x0.083	.931	51.711	5	.006	99.285	y	5	2408.78	14085.15	624.421	624.421	1....	H1-1a
15	M68	Pipe 2.0 A2...	.282	56.574	5	.253	56.574		5	15634.075	23232.186	1397.505	1397.505	1....	H1-1b
16	M69	Pipe 2.0 A2...	.713	1.223	5	.267	0		5	5439	23232.186	1397.505	1397.505	1....	H1-1a
17	M70	1.5x1.5x0.083	.925	51.711	5	.004	99.285	y	7	2408.78	14085.15	624.421	624.421	1....	H1-1a
18	M68A	Pipe 2.5 A2...	.391	82.5	12	.176	140....		5	11641.036	28358.413	2081.747	2081.747	2....	H1-1b
19	M69A	Pipe 2.5 A2...	.474	141....	12	.158	81.813		5	11641.036	28358.413	2081.747	2081.747	2....	H1-1b
20	M70A	Pipe 2.5 A2...	.382	82.5	11	.196	140....		11	11641.036	28358.413	2081.747	2081.747	2....	H1-1b
21	M71	Pipe 2.5 A2...	.480	202....	11	.176	21.656		11	11641.036	28358.413	2081.747	2081.747	2....	H1-1b
22	M73	Pipe 2.0 A2...	.281	56.574	5	.253	56.574		5	15634.075	23232.186	1397.505	1397.505	1....	H1-1b
23	M74	Pipe 2.0 A2...	.711	1.223	5	.267	0		5	5439	23232.186	1397.505	1397.505	1....	H1-1a

Envelope AISC 14th(360-10): ASD Steel Code Checks (Continued)

	Member	Shape	Code Check	Loc[in]	LC	Shear ...	Loc[in]	Dir	LC	Pnc/om [...	Pnt/om [lb]	Mnyy/om...	Mnzz/om...	Cb	Eqn
24	M75	1.5x1.5x0.083	.925	51.711	5	.004	99.285	y	13	2408.78	14085.15	624.421	624.421	1....	H1-1a
25	M69C	Pipe 2.0 A2...	.282	56.574	5	.250	56.574		5	15634.075	23232.186	1397.505	1397.505	1....	H1-1b
26	M70C	Pipe 2.0 A2...	.708	1.223	5	.265	0		5	5439	23232.186	1397.505	1397.505	1....	H1-1a
27	M71B	1.5x1.5x0.083	.917	51.711	5	.003	99.285	y	13	2408.78	14085.15	624.421	624.421	1....	H1-1a
28	M72A	Pipe 2.0 A2...	.282	56.574	5	.257	56.574		5	15634.075	23232.186	1397.505	1397.505	1....	H1-1b
29	M73A	Pipe 2.0 A2...	.722	1.223	5	.271	0		5	5439	23232.186	1397.505	1397.505	1....	H1-1a
30	M74A	1.5x1.5x0.083	.936	51.711	5	.005	99.285	y	5	2408.78	14085.15	624.421	624.421	1....	H1-1a
31	M75B	Pipe 2.0 A2...	.279	56.574	5	.255	56.574		5	15634.075	23232.186	1397.505	1397.505	1....	H1-1b
32	M76	Pipe 2.0 A2...	.725	1.223	5	.268	0		5	5439	23232.186	1397.505	1397.505	1....	H1-1a
33	M77	1.5x1.5x0.083	.920	51.711	5	.018	0	y	11	2408.78	14085.15	624.421	624.421	1....	H1-1a
34	M78A	Pipe 2.0 A2...	.279	56.574	5	.245	56.574		5	15634.075	23232.186	1397.505	1397.505	1....	H1-1b
35	M79	Pipe 2.0 A2...	.675	1.223	5	.259	0		5	5439	23232.186	1397.505	1397.505	1....	H1-1a
36	M80A	1.5x1.5x0.083	.897	51.711	5	.004	0	y	13	2408.78	14085.15	624.421	624.421	1....	H1-1a

Envelope AA ADM1-15: ASD - Building Aluminum Code Checks

	Member	Shape	Code C...	Loc[in]	LC	Shear ...	Loc[in]	Dir	LC	Pnc/O...	Pnt/Om...	Mny/O...	Mnz/O...	Vny/O...	Vnz/O...	Cb	Eqn
1	M19	RT1.5x2x...	.088	56.241	11	.011	0	z	5	2073.828	19411....	770.742	927.083	5889.423	3966.346	1....	H.1-1
2	M16	HR300	.748	41.486	12	.091	41.486	y	12	3634.437	14429....	560.361	934.132	5656.689	2605.145	2....	H.1-1
3	M38	HR300	.784	41.486	12	.096	41.486	y	12	3634.437	14429....	560.361	934.132	5656.689	2605.145	2....	H.1-1
4	M41	HR300	.770	41.486	12	.094	41.486	y	12	3634.437	14429....	560.361	934.132	5656.689	2605.145	2....	H.1-1
5	M44	HR300	.791	41.486	12	.095	41.486	y	12	3634.437	14429....	560.361	934.132	5656.689	2605.145	2....	H.1-1
6	M47	HR300	.779	41.486	12	.094	41.486	y	12	3634.437	14429....	560.361	934.132	5656.689	2605.145	2....	H.1-1
7	M50A	HR300	.802	41.486	12	.095	41.486	y	12	3634.437	14429....	560.361	934.132	5656.689	2605.145	2....	H.1-1
8	M53	HR300	.807	141.4...	16	.094	41.486	y	12	3634.437	14429....	560.361	934.132	5656.689	2605.145	1....	H.1-1
9	M56	HR300	.828	141.4...	16	.095	41.486	y	12	3634.437	14429....	560.361	934.132	5656.689	2605.145	1....	H.1-1
10	M59	HR300	.796	41.486	12	.094	41.486	y	12	3634.437	14429....	560.361	934.132	5656.689	2605.145	2....	H.1-1
11	M62	HR300	.794	41.486	12	.095	41.486	y	12	3634.437	14429....	560.361	934.132	5656.689	2605.145	2....	H.1-1
12	M65	HR300	.794	141.4...	16	.093	41.486	y	12	3634.437	14429....	560.361	934.132	5656.689	2605.145	1....	H.1-1
13	M68B	HR300	.791	41.486	12	.096	41.486	y	12	3634.437	14429....	560.361	934.132	5656.689	2605.145	2....	H.1-1
14	M71A	HR300	.774	41.486	12	.094	41.486	y	12	3634.437	14429....	560.361	934.132	5656.689	2605.145	2....	H.1-1
15	M74B	HR300	.764	41.486	12	.094	41.486	y	12	3634.437	14429....	560.361	934.132	5656.689	2605.145	2....	H.1-1
16	M78	RT1.5x2x...	.095	56.308	11	.016	0	z	5	2068.941	19411....	770.742	927.083	5889.423	3966.346	1....	H.1-1
17	M83	HR300	.731	41.486	6	.087	41.486	y	12	3634.437	14429....	560.361	934.132	5656.689	2605.145	2....	H.1-1
18	M86	HR300	.674	41.486	12	.081	41.486	y	12	3634.437	14429....	560.361	934.132	5656.689	2605.145	2....	H.1-1
19	M89	HR300	.699	141.4...	16	.081	41.486	y	12	3634.437	14429....	560.361	934.132	5656.689	2605.145	1....	H.1-1
20	M92	HR300	.714	41.486	12	.081	41.486	y	12	3634.437	14429....	560.361	934.132	5656.689	2605.145	2....	H.1-1
21	M95	HR300	.716	141.4...	16	.081	41.486	y	12	3634.437	14429....	560.361	934.132	5656.689	2605.145	1....	H.1-1
22	M98	HR300	.690	41.486	12	.081	41.486	y	12	3634.437	14429....	560.361	934.132	5656.689	2605.145	2....	H.1-1
23	M101	HR300	.730	41.486	6	.087	41.486	y	12	3634.437	14429....	560.361	934.132	5656.689	2605.145	2....	H.1-1

REVISIONS			
REV	DESCRIPTION	BY	DATE
A	INITIAL RELEASE	LWF	10/20/2016

NOTES: UNLESS OTHERWISE SPECIFIED

1. DIMENSIONS SHOWN ARE INCHES [MILIMETERS].

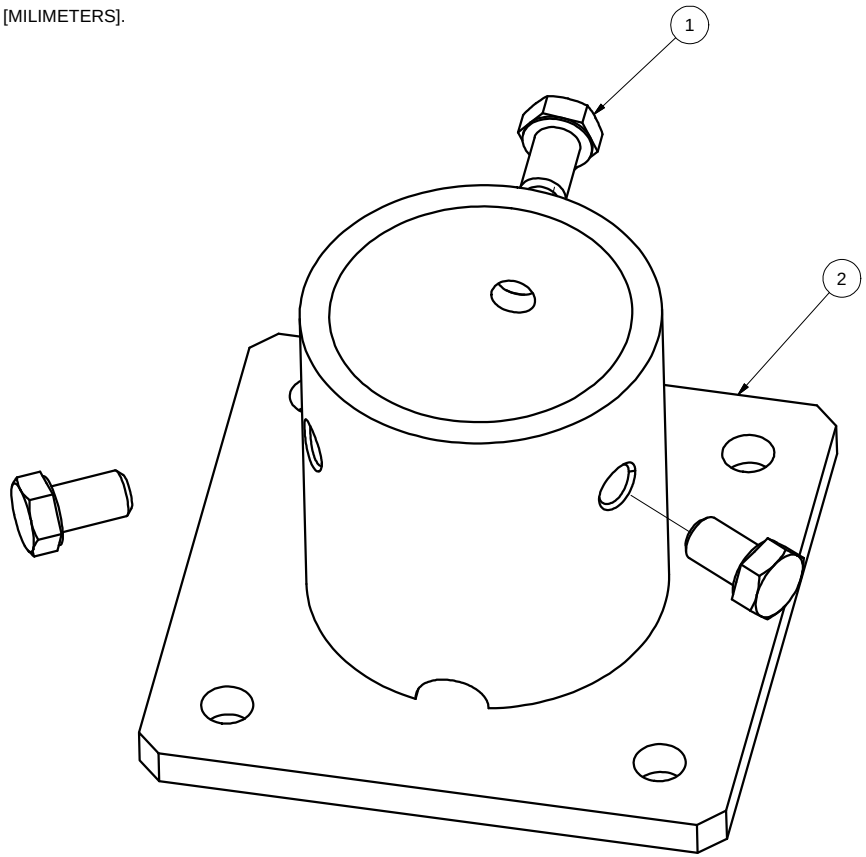

ITEM	PART NUMBER	DESCRIPTION	QTY
2	A21120-001	2" PIPE BASE	1
1	B15018-011	HEX CAP SCREW 3/8-16 X 5/8	3

MATERIAL: SEE NOTES

Third Angle Projection:

GENERAL SPECIFICATIONS
All Dimensions in inches [millimeters]
Tolerances
X.XXX ±0.01 [0.25mm]
X.XX ±0.02 [0.50mm]
X.X ±0.039 [1.0mm]
Unless otherwise spec'd

Break all sharp edges .010-.020 unless otherwise specified.

DRAWN BY: LWF
DATE: 10/20/2016
CHECKED BY:
APPROVALS:

Sunmodo Corp.

1905 E 5TH STREET, STE A, VANCOUVER, WA 98661

TITLE: 2" PIPE BASE KIT

B — DRAWING NUMBER: K10268-001

SCALE: NONE — SHEET 1 of 1

NOTES: UNLESS OTHERWISE SPECIFIED

1. DIMENSIONS SHOWN ARE INCHES [MILIMETERS].
2. MATERAIL: ALUMINUM 6005-T5.
   FINISH: CLEAR ANODIZED 10 µm THICK.
3. THE UNSPECIFIED DIMENSIONS ARE SPECIFIED BY 2D CAD FILE.

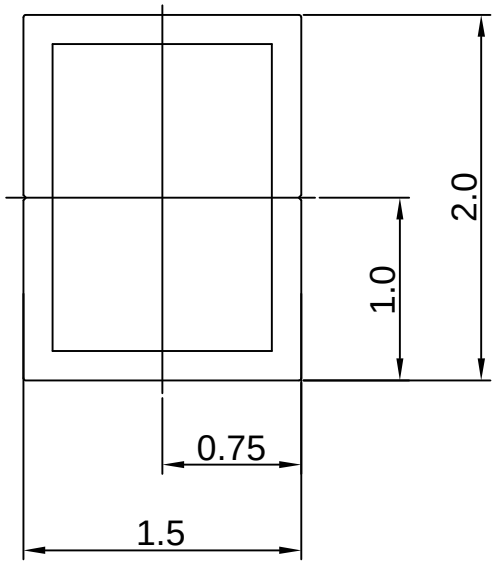

Section properties:

Weight: 1.156 lbs/ft
Area: 0.992 in^2
Perimeter: 12.601 in
Bounding Box: X: -1.000,1.000
Y: -0.750, 0.750
Centroid:(0.000,0.000)
Moments of Inertia(in^4): Ix=0.506,Iy=0.322
Section modulus in bending(in^3): Wx=0.675,Wy=0.322
Radii of Gyration: X: 0.714, Y: 0.570

MATERIAL SEE NOTES		**Sunmodo Corp.**
Third Angle Projection:		1905 E 5TH STREET, SUITE A, VANCOUVER, WA 98661
GENERAL SPECIFICATIONS All Dimensions in inches [millimeters] Tolerances X.XXX ± 0.01 [0.25mm] X.XX ± 0.02 [0.50mm] X.X ± 0.039 [1.0mm] Unless otherwise spec'd	Break all sharp edges .010-.020 unless otherwise specified.	TITLE 1.5X2 AL TUBE BRACE EXTRUSION
DRAWN BY zcg	DATE 03/12/2014	B — DRAWING NUMBER A20164
CHECKED BY		
APPROVALS		SCALE: NONE — SHEET 1 of 1

REVISIONS			
REV	DESCRIPTON	BY	DATE
A	ADDED BOTTOM CHANNEL & CHANGED ONE 3/8 CHANNEL TO 1/4	zcg	02/21/2013

NOTES: UNLESS OTHERWISE SPECIFIED

1. DIMENSIONS SHOWN ARE INCHES [MILIMETERS].
2. MATERAIL: ALUMINUM 6005-T5.
   FINISH: CLEAR ANODIZED 15 µm THICK.
3. THE UNSPECIFIED DIMENSIONS ARE SPECIFIED BY 2D CAD FILE.

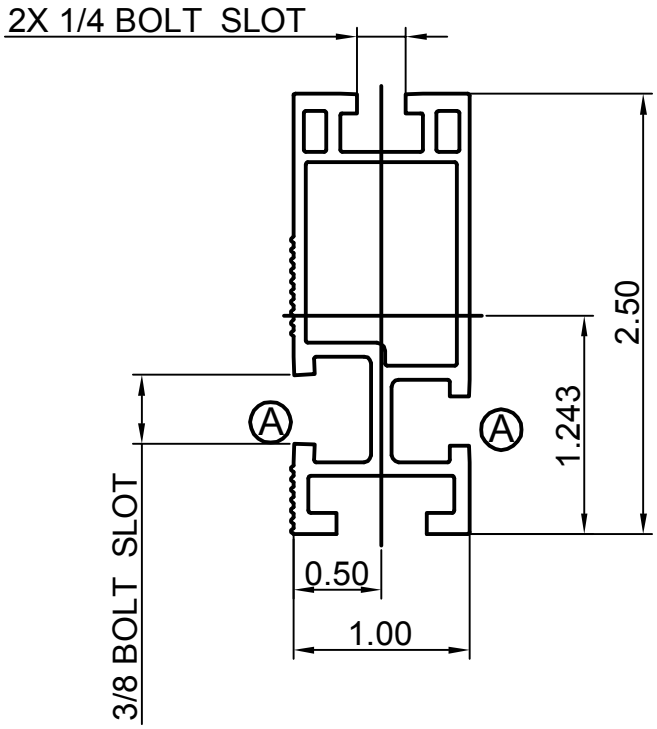

Section properties:

Weight: 0.850 lbs/ft
Area: 0.723 in^2
Perimeter: 17.325 in
Bounding Box: X: -0.500,0.500
Y: -1.243,1.257
Centroid:(0.000,0.000)
Moments of Incertia(in^4): Ix=0.486,Iy=0.095
Section modulus in bending(in^3): Wx=0.387,Wy=0.190
Radii of Gyration: X: 0.820, Y: 0.363

MATERIAL SEE NOTES	**Sunmodo Corp.**	
Third Angle Projection:	1905 E 5TH STREET, SUITE A, VANCOUVER, WA 98661	
GENERAL SPECIFICATIONS All Dimensions in inches [millimeters] Tolerances X.XXX ± 0.01 [0.25mm] X.XX ± 0.02 [0.50mm] X.X ± 0.039 [1.0mm] Unless otherwise spec'd — Break all sharp edges .010-.020 unless otherwise specified.	TITLE HELIO STANDARD RAIL	
DRAWN BY zcg — DATE 02/21/2013	B — DRAWING NUMBER A20144	
CHECKED BY		
APPROVALS	SCALE: NONE	SHEET 1 of 1

NOTES: UNLESS OTHERWISE SPECIFIED

1. DIMENSIONS SHOWN ARE INCHES [MILIMETERS].
2. MATERIAL: 6005-T5.
   FINISH: CLEAR ANODIZED 10um THICK.
3. THE UNSPECIFIED RADII ARE .02" MAX.
4. THE UNSPECIFIED DIMENSIONS ARE SPECIFIED BY 2D CAD FILE.

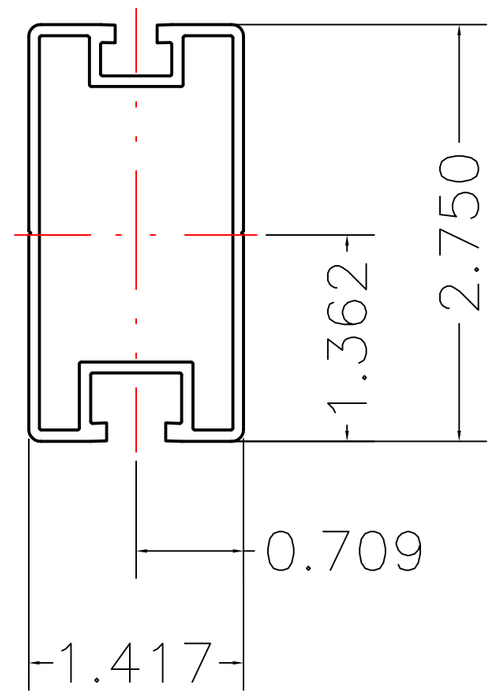

Section properties:

Weight: 0.862 lbs/ft
Area: 0.736 in^2
Perimeter: 19.824 in
Bounding Box: X: -0.709,0.709
Y: -1.362,1.388
Centroid:(0.000,0.000)
Moments of Incertia(in^4): Ix=0.727,Iy=0.214
Section modulus in bending(in^3): Wx=0.524,Wy=0.302
Radii of Gyration: X: 994, Y: 0.539

MATERIAL SEE NOTES		**SunModo Corp.** 14800 NE 65TH STREET, VANCOUVER WA 98682
Third Angle Projection:		
GENERAL SPECIFICATIONS All Dimensions in Inches [millimeters] Tolerances X.XXX ±0.01 [0.25mm] X.XX ±0.02 [0.50mm] X.X ±0.039 [1.0mm] Unless otherwise spec'd	Break all sharp edges .010-.020 unless otherwise specified.	TITLE RAIL, HR300 (SUNRAY), EXTRUSION
DRAWN BY KYY	DATE 01/18/2018	
CHECKED BY		B — DRAWING NUMBER A20288
APPROVALS		SCALE: NONE — SHEET 1 of 1

REV	DESCRIPTON	BY	DATE
A	0.44 WAS 0.41, 0.44 WAS 0.33	LWF	11/30/2015

NOTES: UNLESS OTHERWISE SPECIFIED

1. DIMENSIONS SHOWN ARE INCHES [MILIMETERS].
2. MATERAIL: ALUMINUM 6005-T5.
   FINISH: CLEAR ANODIZED 15 µm THICK.
3. THE UNSPECIFIED DIMENSIONS ARE SPECIFIED BY 2D CAD FILE.

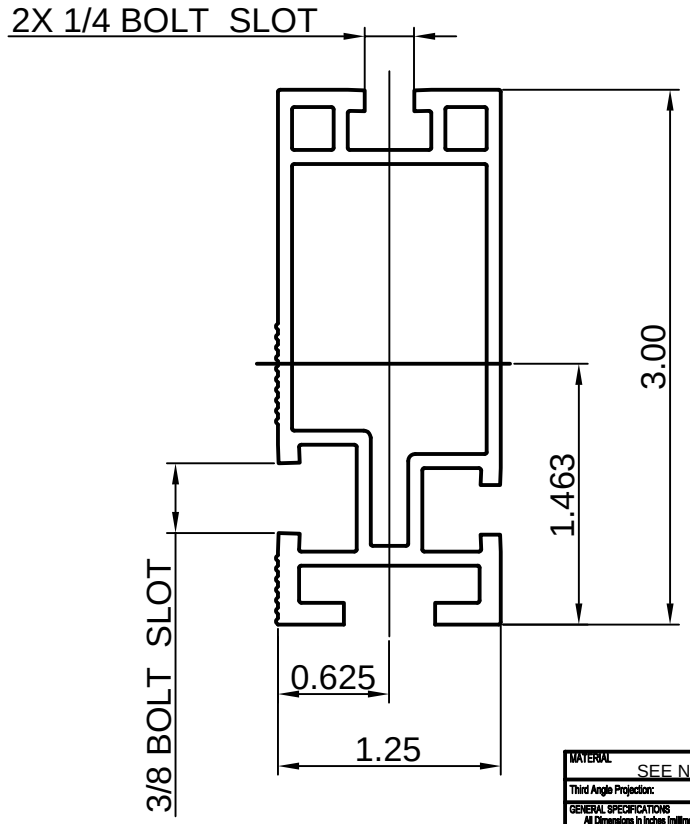

Section properties:

Weight: 1.151 lbs/ft
Area: 0.980 in^2
Perimeter: 22.104 in
Bounding Box: X: -0.625,0.625
Y: -1.463,1.537
Centroid:(0.000,0.000)
Moments of Inertia(in^4): Ix=1.047,Iy=0.207
Section modulus in bending(in^3): Wx=0.681,Wy=0.331
Radii of Gyration: X: 1.034, Y: 0.460

MATERIAL: SEE NOTES
Third Angle Projection:
GENERAL SPECIFICATIONS
All Dimensions in Inches [millimeters]
Tolerances
X.XXX ±0.01 [0.25mm]
X.XX ±0.02 [0.50mm]
X.X ±0.039 [1.0mm]
Unless otherwise specf'd
Break all sharp edges .010-.020 unless otherwise specified.
DRAWN BY: zcg
DATE: 02/21/2013
CHECKED BY
APPROVALS

Sunmodo Corp.
1905 E 5TH STREET, SUITE A, VANCOUVER, WA 98661

TITLE: HELIO HEAVY RAIL
B
DRAWING NUMBER: A20145
SCALE: NONE
SHEET 1 of 1

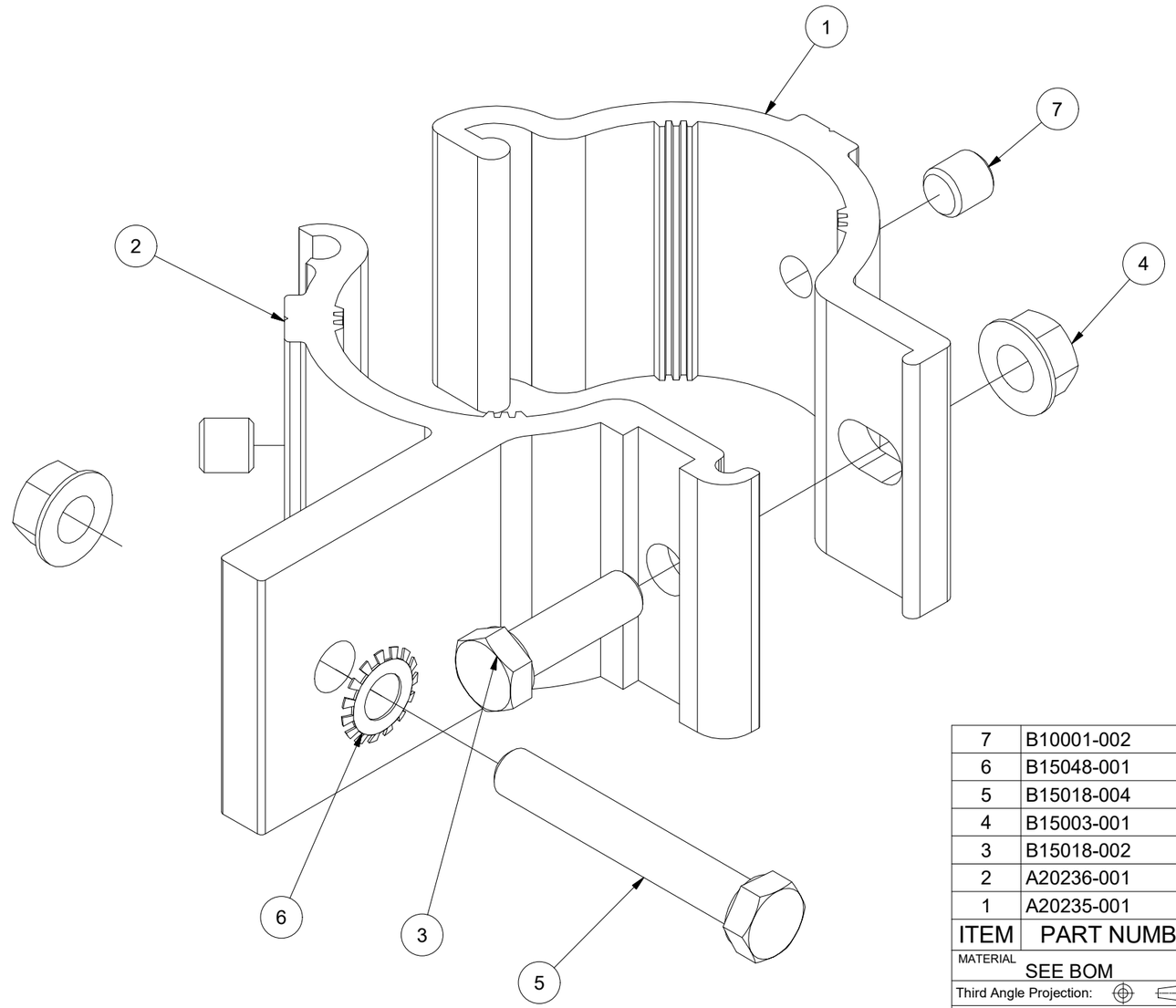

ITEM	PART NUMBER	DESCRIPTION	QTY
7	B10001-002	SET SCREW M10X10	2
6	B15048-001	STAR WASHER FOR 3/8 BOLT	1
5	B15018-004	HEX CAP SCREW 3/8-16 X2.5	1
4	B15003-001	FLANGE NUT 3/8-16	2
3	B15018-002	HEX CAP SCREW 3/8-16 X 1.25	1
2	A20236-001	2 AL PIPE CLAMP, FEMALE	1
1	A20235-001	2 AL PIPE CLAMP, MALE	1

MATERIAL: SEE BOM

Third Angle Projection:

GENERAL SPECIFICATIONS
All Dimensions in inches [millimeters]
Tolerances
X.XXX ±0.01 [0.25mm]
X.XX ±0.02 [0.50mm]
X.X ±0.039 [1.0mm]
Unless otherwise spec'd

Break all sharp edges .010-.020 unless otherwise specified.

DRAWN BY: zcg
DATE: 08/12/2015
CHECKED BY:
APPROVALS:

Sunmodo Corp.

1905 E 5TH STREET, STE A, VANCOUVER, WA 98661

TITLE: 2 AL PIPE CLAMP KIT

B — DRAWING NUMBER: K10219-001

SCALE: NONE — SHEET 1 of 1

REVISIONS			
REV	DESCRIPTION	BY	DATE
A	INITIAL RELEASE	LWF	06/12/2018
B	ADD C10005-006	LWF	06/27/2018

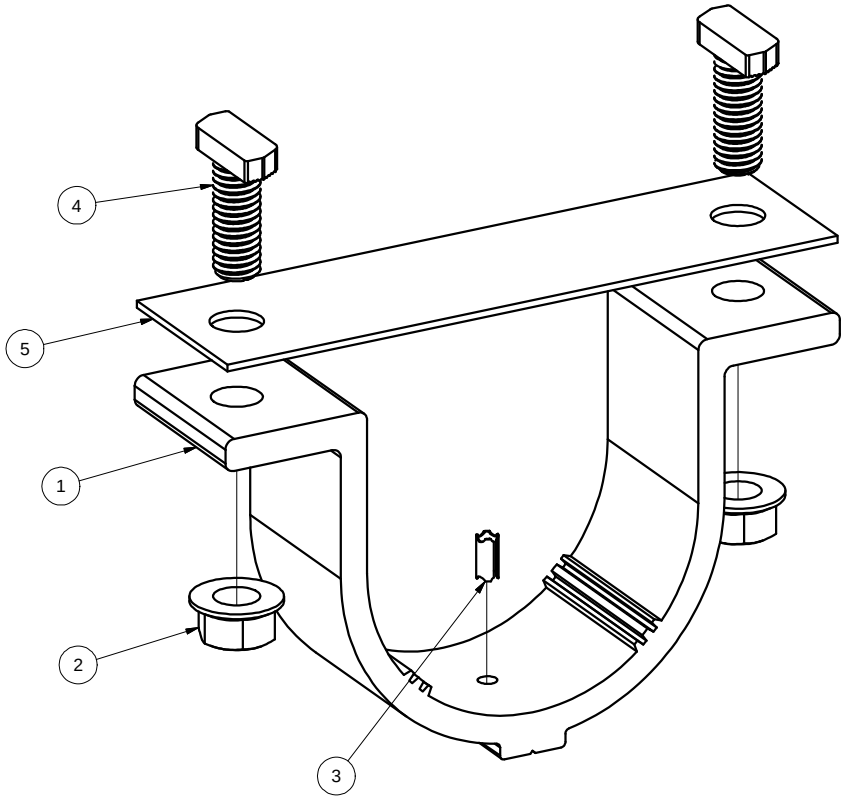

ITEM	PART NUMBER	DESCRIPTION	QTY
5	C10005-006	PVC GASKTE T=1.5mm	1
4	B50033-001	T-BOLT, RAIL BOTTOM SLOT, 3/8-16 X 1"	2
3	B20018-002	GROUNDING PIN	1
2	B15003-001	FLANGE NUT 3/8-16	2
1	A20329-001	2.5" AL PIPE U-BOLT	1

MATERIAL: SEE NOTES

Third Angle Projection:

GENERAL SPECIFICATIONS
All Dimensions in inches [millimeters]
Tolerances
X.XXX ±0.01 [0.25mm]
X.XX ±0.02 [0.50mm]
X.X ±0.039 [1.0mm]
Unless otherwise spec'd

Break all sharp edges .010-.020 unless otherwise specified.

DRAWN BY: KYY
DATE: 06/12/2018
CHECKED BY:
APPROVALS:

SunModo Corp.

14800 NE 65TH STREET, VANCOUVER WA 98682

TITLE: 2.5" AL PIPE U-CLAMP KIT

B

DRAWING NUMBER: K10343-001

SCALE: NONE

SHEET 1 of 1

REVISIONS			
REV	DESCRIPTION	BY	DATE
A	INITIAL RELEASE	zcg	09/25/2015

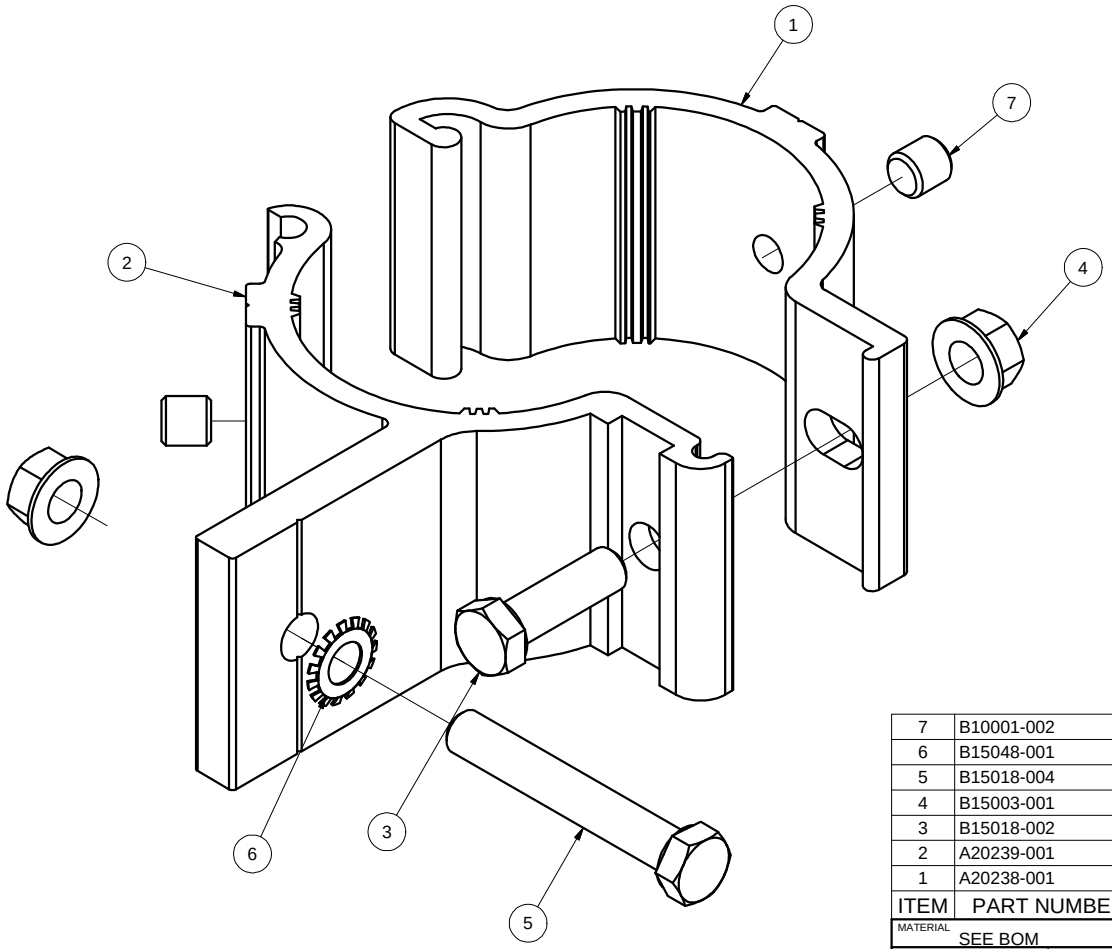

ITEM	PART NUMBER	DESCRIPTION	QTY
7	B10001-002	SET SCREW M10X10	2
6	B15048-001	STAR WASHER FOR 3/8 BOLT	1
5	B15018-004	HEX CAP SCREW 3/8-16 X2.5	1
4	B15003-001	FLANGE NUT 3/8-16	2
3	B15018-002	HEX CAP SCREW 3/8-16 X 1.25	1
2	A20239-001	2.5 AL PIPE CLAMP, FEMALE	1
1	A20238-001	2.5 AL PIPE CLAMP, MALE	1

MATERIAL: SEE BOM

Third Angle Projection:

GENERAL SPECIFICATIONS
All Dimensions in inches [millimeters]
Tolerances
X.XXX ±0.01 [0.25mm]
X.XX ±0.02 [0.50mm]
X.X ±0.039 [1.0mm]
Unless otherwise spec'd

Break all sharp edges .010-.020 unless otherwise specified.

DRAWN BY: LWF
DATE: 08/21/2015
CHECKED BY:
APPROVALS:

Sunmodo Corp.

1905 E 5TH STREET, STE A, VANCOUVER, WA 98661

TITLE: 2.5 AL PIPE CLAMP KIT

B

DRAWING NUMBER: K10222-001

SCALE: NONE

SHEET 1 of 1

REVISIONS			
REV	DESCRIPTION	BY	DATE
A	INITIAL RELEASE	LWF	06/12/2018

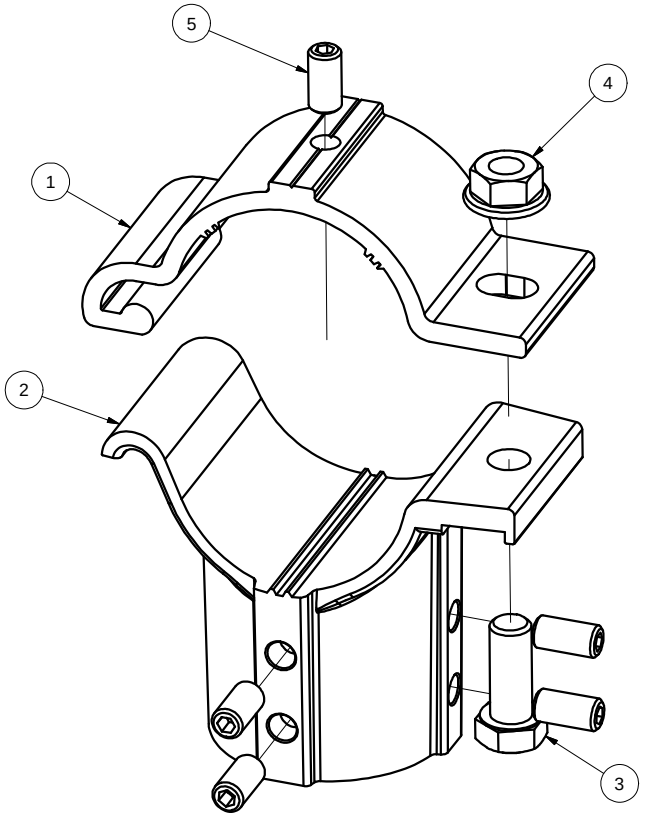

ITEM	PART NUMBER	DESCRIPTION	QTY
5	B10001-001	SET SCREW M10X20	5
4	B15020-001	FLANGE NUT 1/2-13	1
3	B15014-005	HEX CAP SCREW 1/2-13 X 1.25", 304 SS	1
2	A20327-001	2.5" AL PIPE TEE, FEMALE	1
1	A20326-001	2.5" AL PIPE TEE, MALE	1

MATERIAL: SEE NOTES

Third Angle Projection:

GENERAL SPECIFICATIONS
All Dimensions in inches [millimeters]
Tolerances
X.XXX ±0.01 [0.25mm]
X.XX ±0.02 [0.50mm]
X.X ±0.039 [1.0mm]
Unless otherwise spec'd

Break all sharp edges .010-.020 unless otherwise specified.

DRAWN BY: LWF
DATE: 06/12/2018
CHECKED BY:
APPROVALS:

SunModo Corp.

14800 NE 65TH STREET, VANCOUVER WA 98682

TITLE: 2.5" PIPE TEE KIT

B

DRAWING NUMBER: K10341-001

SCALE: NONE

SHEET 1 of 1

REVISIONS			
REV	DESCRIPTION	BY	DATE
A	INITIAL RELEASE	LWF	06/12/2018

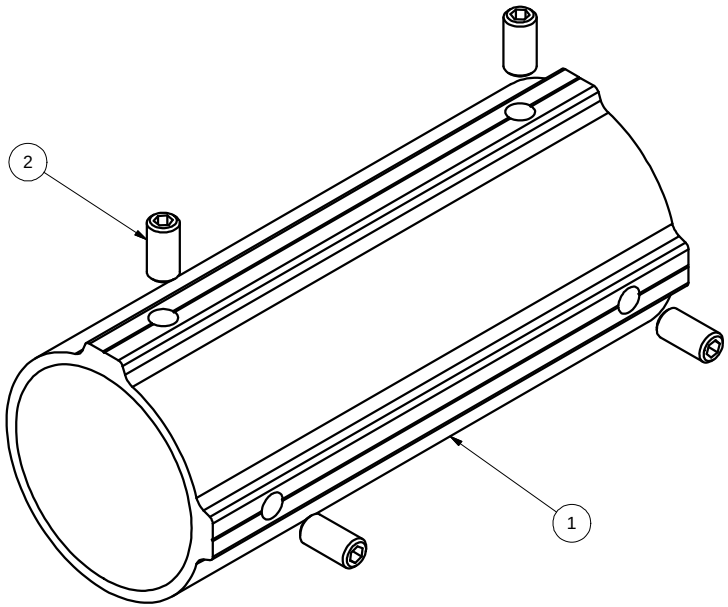

ITEM	PART NUMBER	DESCRIPTION	QTY
2	B10001-001	SET SCREW M10X20	4
1	A20328-001	2.5" PIPE SPLICE	1

MATERIAL: SEE NOTES

Third Angle Projection:

GENERAL SPECIFICATIONS
All Dimensions in inches [millimeters]
Tolerances
X.XXX ±0.01 [0.25mm]
X.XX ±0.02 [0.50mm]
X.X ±0.039 [1.0mm]
Unless otherwise spec'd

Break all sharp edges .010-.020 unless otherwise specified.

DRAWN BY: LWF
DATE: 06/12/2018
CHECKED BY:
APPROVALS:

SunModo Corp.

14800 NE 65TH STREET, VANCOUVER WA 98682

TITLE: 2.5" PIPE SPLICE KIT

B

DRAWING NUMBER: K10342-001

SCALE: NONE

SHEET 1 of 1

NOTES: UNLESS OTHERWISE SPECIFIED

1. DIMENSIONS SHOWN ARE INCHES [MILIMETERS].

2. MATERAIL:HIGH STRENGTH STEEL PIPE OR TUBE.

3. FINISH: HOT DIP GALVANIZE PER ASTM A123 / A123M - 02.

   MINIMUM 50 KSI YIELD STRESS.

4. BREAK ALL BURRS AND SHARP EDGES.

5. ALL WELDING MUST BE IN COMPLIANCE WITH AWS CODE D1;1.

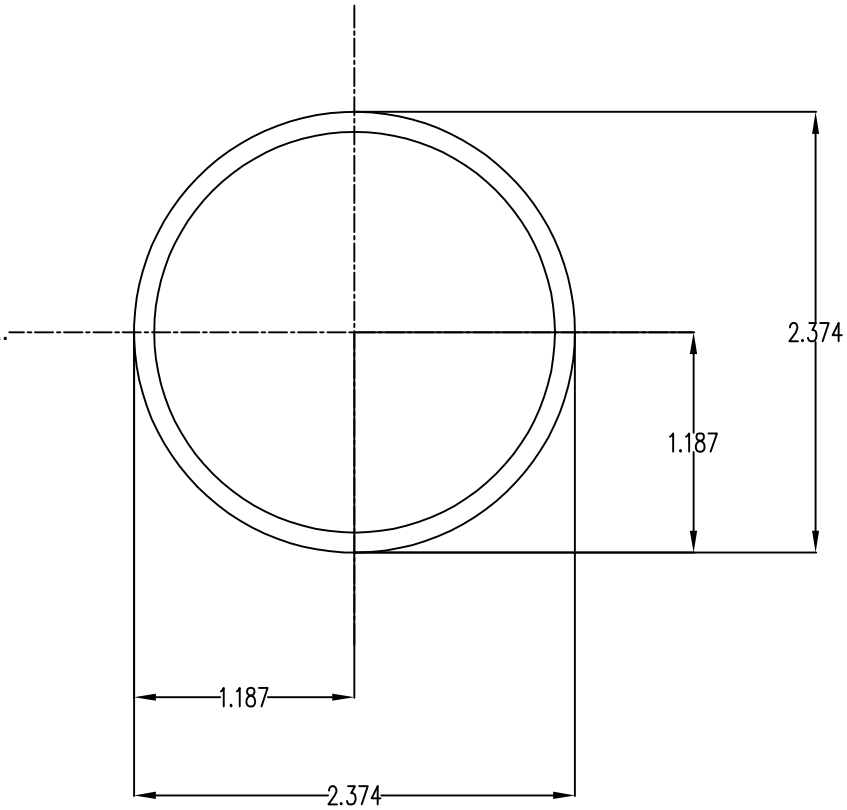

Section properties:

Weight: 2.641 lbs/ft
Area: 0.776 in^2
Perimeter: 14.238 in
Bounding Box: X: -1.187,1.187
Y: -1.187,1.187
Centroid:(0.000,0.000)
Moments of Inertia(in^4): Ix=0.499,Iy=0.499
Section modulus in bending(in^3): Wx=0.420,Wy=0.420
Radii of Gyration: X: 0.802, Y: 0.802

MATERIAL SEE NOTES		**Sunmodo Corp.**
Third Angle Projection:		14800 NE 65TH STREET, VANCOUVER WA 98682
GENERAL SPECIFICATIONS All Dimensions in Inches [millimeters] Tolerances X.XXX ±0.01 [0.25mm] X.XX ±0.02 [0.50mm] X.X ±0.039 [1.0mm] Unless otherwise spec'd	Break all sharp edges .010-.020 unless otherwise specified.	TITLE PIPE, HSS, 2.375" OD X 12 GAUGE,L=XXX
DRAWN BY LWF	DATE 04/03/2019	B — DRAWING NUMBER A21165
CHECKED BY		
APPROVALS		SCALE: NONE — SHEET 1 of 1

NOTES: UNLESS OTHERWISE SPECIFIED

1. DIMENSIONS SHOWN ARE INCHES [MILIMETERS].

2. MATERAIL:HIGH STRENGTH STEEL PIPE OR TUBE.

3. FINISH: HOT DIP GALVANIZE PER ASTM A123 / A123M - 02.

   MINIMUM 50 KSI YIELD STRESS.

4. BREAK ALL BURRS AND SHARP EDGES.

5. ALL WELDING MUST BE IN COMPLIANCE WITH AWS CODE D1;1.

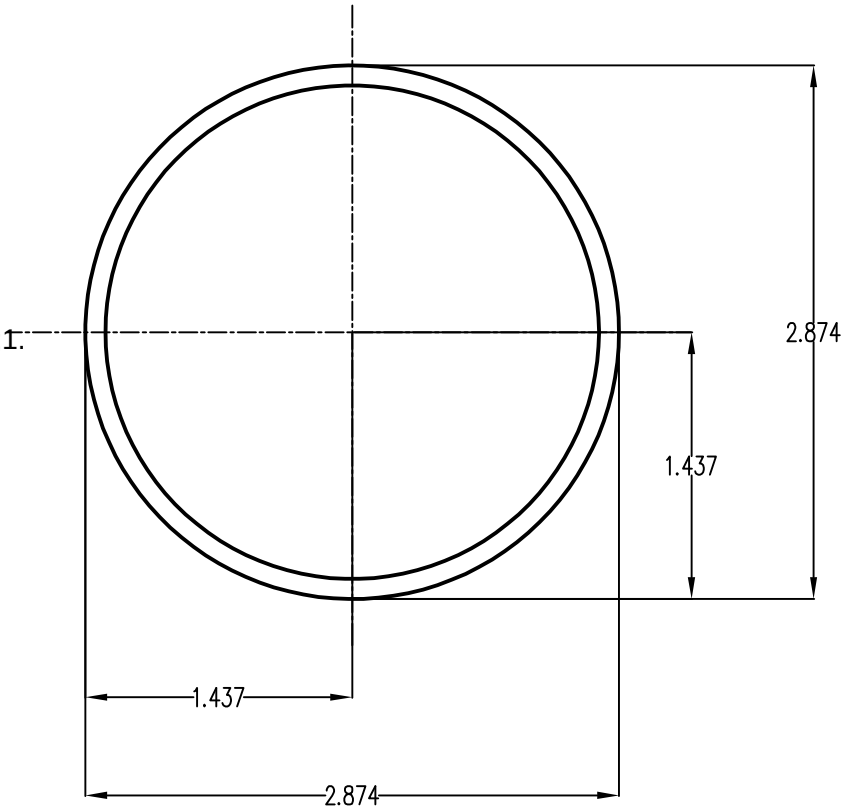

Section properties:

Weight: 3.201 lbs/ft
Area: 0.941 in^2
Perimeter: 17.378 in
Bounding Box: X: -1.437,1.437
Y: -1.437,1.437
Centroid:(0.000,0.000)
Moments of Inertia(in^4): Ix=0.901,Iy=0.901
Section modulus in bending(in^3): Wx=0.627,Wy=0.627
Radii of Gyration: X: 0.979, Y: 0.979

MATERIAL SEE NOTES		**Sunmodo Corp.**
Third Angle Projection:		14800 NE 65TH STREET, VANCOUVER WA 98682
GENERAL SPECIFICATIONS All Dimensions in Inches [millimeters] Tolerances X.XXX ±0.01 [0.25mm] X.XX ±0.02 [0.50mm] X.X ±0.039 [1.0mm] Unless otherwise spec'd	Break all sharp edges .010-.020 unless otherwise specified.	TITLE PIPE, HSS, 2.875" OD X 12 GAUGE,L=XXX
DRAWN BY LWF	DATE 04/03/2019	B — DRAWING NUMBER A21168
CHECKED BY		
APPROVALS		SCALE: NONE — SHEET 1 of 1