Project Number: U2716-095-191

April 8, 2021

Sunmodo
14800 NE 65th Street
Vancouver, WA 98682

REFERENCE: USA Ground Mount B2 (85x45)
Ground Mount PV Array Installation

To Whom It May Concern:

Per request of Sunmodo, we have been asked to prepare the structural design of a ground-mounted PV solar array system with several foundation options as shown in the attached calculations. The adopted building code in this jurisdiction is the 2009 International Building Code. Vector Structural Engineering requires that we review each site specific install, and we are not liable for installs at site specific locations we have not reviewed. The following design parameters are used in our analysis:

- Minimum Design Loads for Buildings and Other Structures (ASCE 7-05)
- Design wind speed for occupancy category I structures: 90 mph
- Importance Factor: 0.77
- Wind exposure: C
- Ground snow load: 30 psf
- The ground screws and helical piers must be tested to 1.5 times uplift and 2.0 times lateral reactions found in the table below. A minimum of one ground screw or helical pier must be tested.

Load (ASD)	Value (lbs)	Factor of Safety	Test Value (lbs)
UPLIFT	2563	1.5	3845
LATERAL	1783	2	3566

Foundation concrete shall have a minimum compressive strength of 2500 psi at 28 days. Cement for all concrete shall be Type I or II with a minimum of 6% entrained air with a water/cement ratio of 0.50. Maximum aggregate size shall be 3/4". No special inspection of concrete strength is required.

Footings are designed based on an allowable soil bearing pressure of 1500 psf an allowable skin friction of 250 psf, an allowable lateral bearing pressure of 150 pcf, and a coefficient of friction of 0.3. Vector Structural Engineering strongly recommends independent soils testing be performed by a licensed geotechnical engineer to verify the assumed soil parameters.

All ground mounts are to be installed per manufacturer's recommendations. The use of solar panel support span tables provided by the manufacturer is allowed only where the site conditions and solar panel configuration match the description of the span tables. Electrical engineering is beyond our scope. All work performed must be in accordance with accepted industry-wide methods and applicable safety standards. Vector Structural Engineering assumes no responsibility for improper installation of the solar panels.

Very truly yours,

VECTOR STRUCTURAL ENGINEERING, LLC

COLORADO LICENSED
KELLY G. SPRINGER
56677
04/08/2021
PROFESSIONAL ENGINEER

Kelly Springer, P.E.
License: 56677 - Expires: 10/31/2021
Project Engineer

Enclosures

KGS/stb

VECTOR ENGINEERS
651 W GALENA PARK BLVD. #101 (801) 990-1775
DRAPER, UTAH 84020 (801) 990-1776 FAX

JOB NO. U2716-095-191
PROJECT SUNMODO SUNTURF GROUND MOUNTS B2
SUBJECT ALL OPTIONS

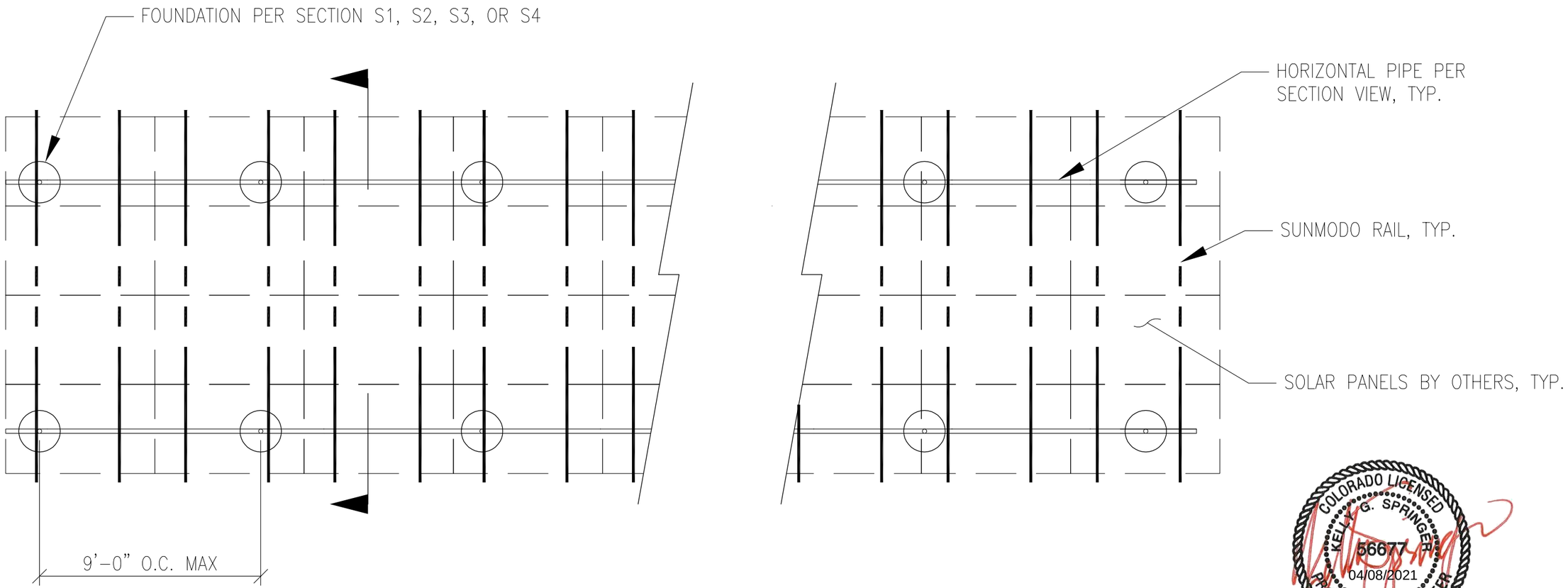

COLORADO LICENSED
KELLY G. SPRINGER
56677
04/08/2021
PROFESSIONAL ENGINEER

PV ARRAY PLAN

N.T.S.

P1

VECTOR ENGINEERS

JOB NO. U2716-095-191

PROJECT SUNMODO SUNTURF GROUND MOUNTS B2

SUBJECT DRILLED PIER OPTION

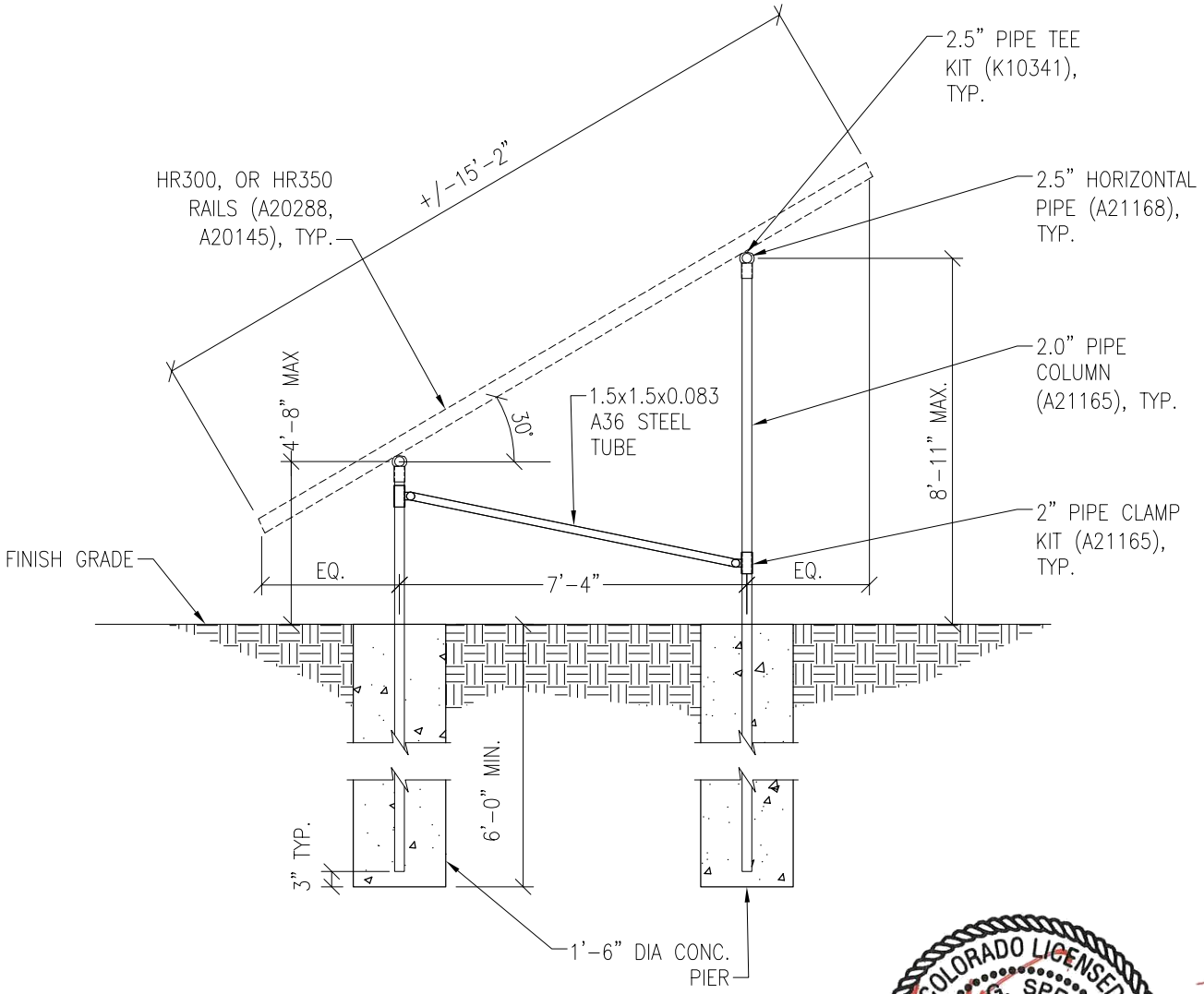

COLORADO LICENSED
KELLY G. SPRINGER
56677
04/08/2021
PROFESSIONAL ENGINEER

Vector Engineers requires that we review each site specific install and is not liable for installs at site specific locations we have not reviewed.

PV ARRAY SECTION

N.T.S.

S1

651 W Galena Park Blvd. #101
Draper, Utah 84020
(801) 990-1775
(801) 990-1776 FAX
www.vectorse.com

VECTOR ENGINEERS

JOB NO. U2716-095-191

PROJECT SUNMODO SUNTURF GROUND MOUNTS B2

SUBJECT HELICAL PIER OPTION

NOTES:

1. For ground mount components see Section S1.
2. A minimum of (1) helical pier must be load-tested as follows:
   - 2.1. Safety factor for uplift = 1.5,
   - 2.2. Safety factor for lateral loads = 2.0
   - 2.3. Upward deflection limit = 1/2"
   - 2.4. Lateral deflection limit = 1"
   - 2.5. The load tests must be performed by an approved contractor.

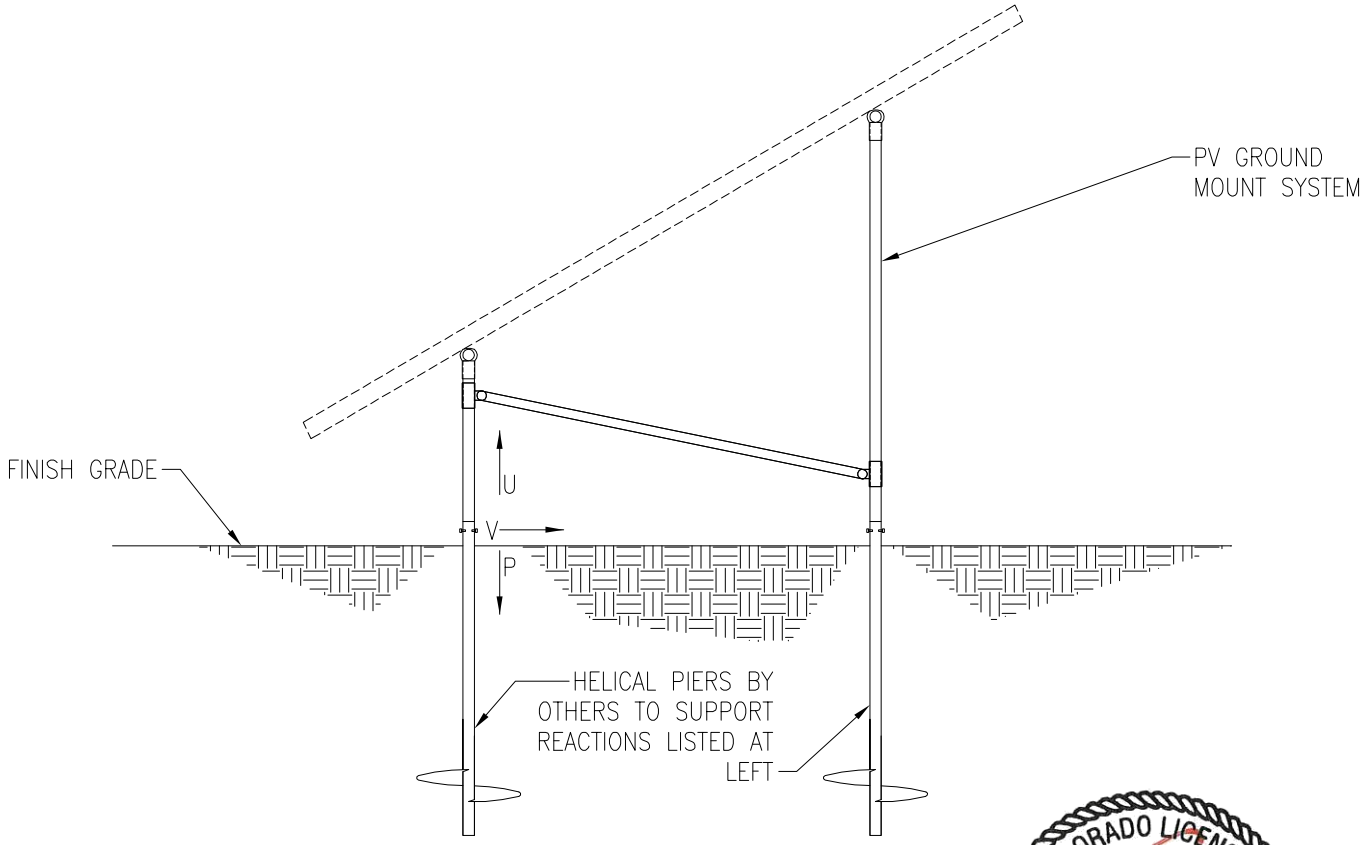

MAXIMUM REACTIONS:
U = 2,563 LBS
P = 3,044 LBS
V = 1,783 LBS

COLORADO LICENSED
KELLY G. SPRINGER
56677
04/08/2021
PROFESSIONAL ENGINEER

Vector Engineers requires that we review each site specific install and is not liable for installs at site specific locations we have not reviewed.

PV ARRAY SECTION

N.T.S.

S2

651 W GALENA PARK BLVD. #101
DRAPER, UTAH 84020
(801) 990-1775
(801) 990-1776 FAX
WWW.VECTORSE.COM

VECTOR ENGINEERS

JOB NO. U2716-095-191

PROJECT SUNMODO SUNTURF GROUND MOUNTS B2

SUBJECT GROUND SCREW OPTION

NOTES:

1. For ground mount components see Section S1.
2. A minimum of (1) ground screw must be load-tested as follows:
   - 2.1. Safety factor for uplift = 1.5,
   - 2.2. Safety factor for lateral loads = 2.0
   - 2.3. Upward deflection limit = 1/2"
   - 2.4. Lateral deflection limit = 1"
   - 2.5. The load tests must be performed by an approved contractor.

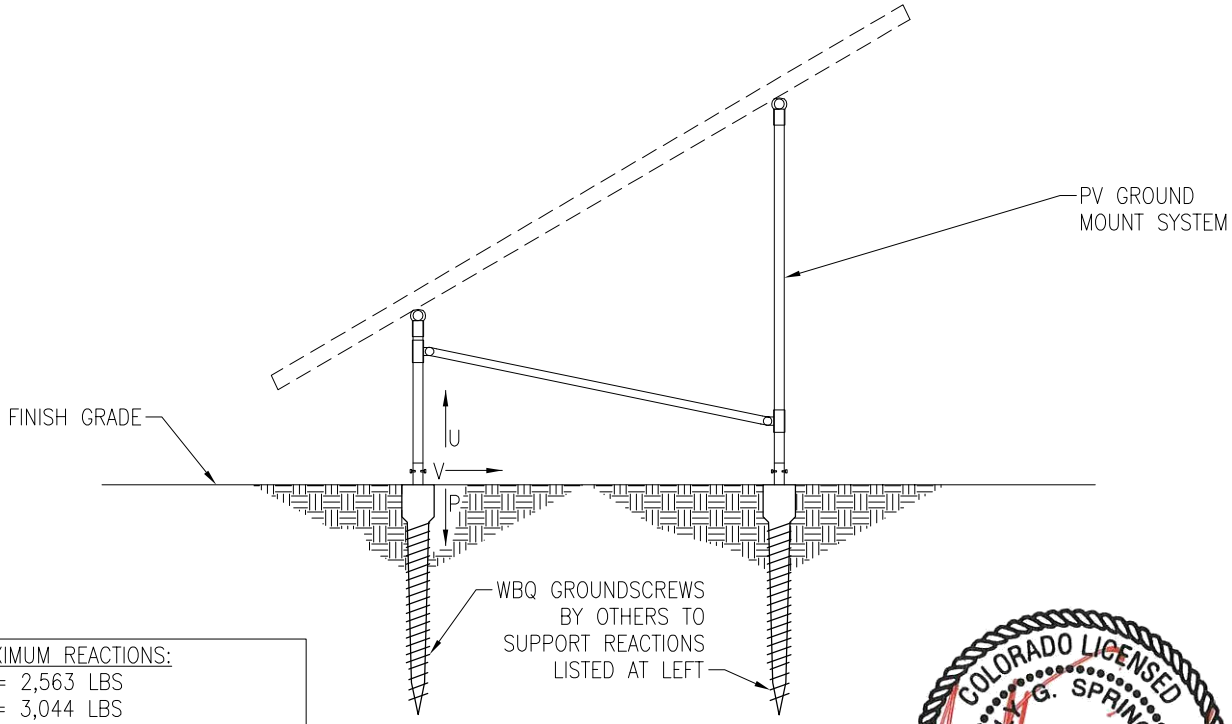

MAXIMUM REACTIONS:
U = 2,563 LBS
P = 3,044 LBS
V = 1,783 LBS

COLORADO LICENSED
KELLY G. SPRINGER
56677
04/08/2021
PROFESSIONAL ENGINEER

Vector Engineers requires that we review each site specific install and is not liable for installs at site specific locations we have not reviewed.

PV ARRAY SECTION

N.T.S.

S3

651 W Galena Park Blvd. #101
Draper, Utah 84020
(801) 990-1775
(801) 990-1776 FAX
www.vectorse.com

VECTOR ENGINEERS

JOB NO. U2716-095-191

PROJECT SUNMODO SUNTURF GROUND MOUNTS B2

SUBJECT BALLASTED BLOCK OPTION

NOTES:

1. For ground mount components see Section S1.

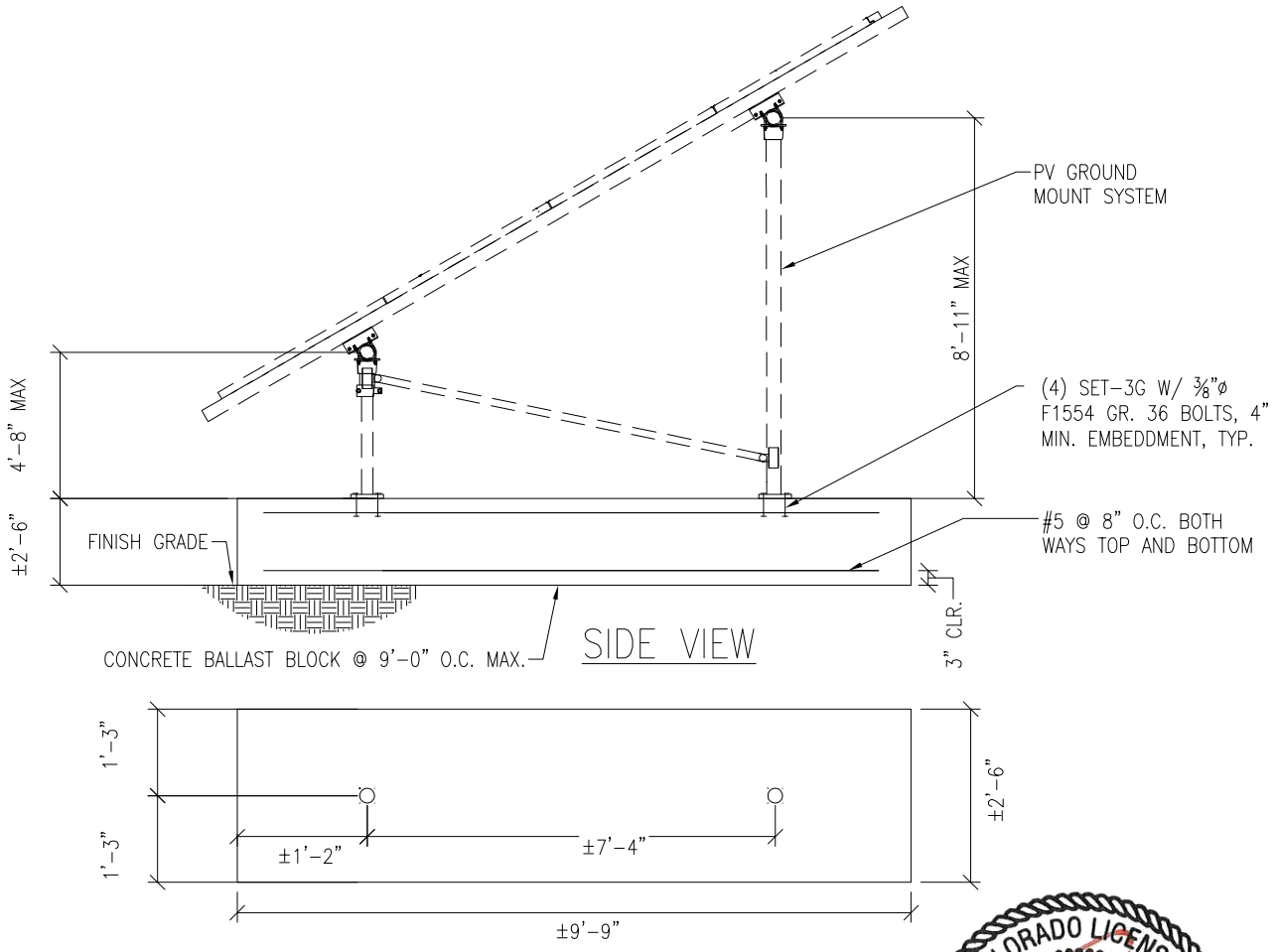

COLORADO LICENSED
KELLY G. SPRINGER
56677
04/08/2021
PROFESSIONAL ENGINEER

Vector Engineers requires that we review each site specific install and is not liable for installs at site specific locations we have not reviewed.

PV ARRAY SECTION

N.T.S.

S4

651 W GALENA PARK BLVD. #101
DRAPER, UTAH 84020
(801) 990-1775
(801) 990-1776 FAX
WWW.VECTORSE.COM

JOB NO.: U2716-095-191 **DESIGNED:** STB
DATE: 07/26/19

PROJECT: B2 – Sunmodo Sunturf GM **SUBJECT:** Snow Load

SNOW LOAD (S):

ASCE 7 Standard:	05	
Panel Slope from Horizontal [°]:	30.0	
Snow Ground Load, p_g [psf]:	30.0	(Section 7.2)
Terrain Category:	C	(Table 7-2)
Exposure of Roof:	Fully Exposed	(Table 7-2)
Exposure Factor, C_e:	0.9	(Table 7-2)
Thermal Factor, C_t:	1.2	(Table 7-3)
Occupancy Category:	I	(Table 1-1)
Importance Factor, I_S:	0.8	(Table 7-4)
Flat Roof Snow Load, p_f [psf]:	18	(Equation 7-1)
Minimum Roof Snow Load, p_m [psf]:	0	(Section 7.3.4)
Unobstructed Slippery Surface?	Yes	(Section 7.4)
Slope Factor Figure:	Figure 7-2c	(Section 7.4)
Roof Slope Factor, C_s:	0.727	(Figure 7-2)
Sloped Roof Snow Load, p_s [psf]:	13	(Equation 7-2)
Design Snow Load, S [psf]:	13	
Tributary Transverse Length [ft]:	5.9	
Tributary Longitudinal Length [ft]:	9	
Tributary Area per Column [ft^2]:	53.5	
Snow Load per Column (1.0 S) [lb]:	**706.2**	

JOB NO.: U2716-095-191 **DESIGNED:** STB
DATE: 07/26/19

PROJECT: B2 – Sunmodo Sunturf GM **SUBJECT:** Wind Pressure

Design Wind Load:

ASCE 7 Standard:	05	
Basic Wind Speed, V [mph]:	90	
Occupancy Category:	I	
Importance, Iw:	0.87	
Exposure Category	C	(Section 6.5.6.3)
Velocity Pressure Exposure Coefficient, K_h:	0.85	(Table 6-3)
Topographic Factor, K_{ht}:	1.0	(Section 6.5.7.2)
Wind Directionality Factor, K_d:	0.85	(Table 6-4)
Internal Pressure Coefficient, GC_{pi} :	0.00	(Figure 6-5)
Velocity Pressure, q_h [psf]:	13.0	(Equation 6-15)
Gust Effect Factor, G:	0.85	(Section 6.5.8)
Panel Slope [degrees]:	30.0	

Net Pressure Coefficients (C_N) per: (Figure 6-18A)

Clear Wind Flow	C_{NW}	C_{NL}
Case 1 (γ = 0°, Load Case A)	-1.80	-1.80
Case 2 (γ = 0°, Load Case B)	-2.50	-0.50
Case 3 (γ = 180°, Load Case A)	2.10	2.10
Case 4 (γ = 180°, Load Case B)	2.60	1.00

Design Wind Pressures (p) [psf] per: (Equation 6-25)

Clear Wind Flow	q_hGC_{NW}	q_hGC_{NL}
Case 1 (γ = 0°, Load Case A)	-19.9	-19.9
Case 2 (γ = 0°, Load Case B)	-27.7	-5.5
Case 3 (γ = 180°, Load Case A)	23.3	23.3
Case 4 (γ = 180°, Load Case B)	28.8	11.1

Wind Pressure on Each Side of Panels [psf]

Clear Wind Flow	Short Col. Pressure	Long Col. Pressure
Case 1 (γ = 0°, Load Case A)	-19.9	-19.9
Case 2 (γ = 0°, Load Case B)	-5.5	-27.7
Case 3 (γ = 180°, Load Case A)	23.3	23.3
Case 4 (γ = 180°, Load Case B)	28.8	11.1

Design Wind Load Per ASCE 7-05

$p = q_h G C_n$

Velocity Pressure Exposure Coefficient, K_h:	0.85	(Table 6-3)
Topographic Factor, K_{ht}:	1.0	(Section 6.5.7.2)
Wind Directionality Factor, K_d:	0.85	(Table 6-4)
Ultimate Wind Speed, V [mph]:	90	
Velocity Pressure, q_h [psf]:	13.0	(Equation 6-15)
Gust Effect Factor, G:	0.85	(Section 6.5.8)

$\gamma = 90^o$ or 270°

Force Coefficient, C_N:

Horizontal Distance from Winward Edge	Roof angle	Load Case	Obstructed Wind Flov
			CN
<= h	30	A	-0.8
		B	0.8
> h, <= 2h	30	A	-0.6
		B	0.5
> 2h	30	A	-0.3
		B	0.3

Design Wind Pressure, p [psf]:

	Roof angle	Load Case	Obstructed Wind Flov
<= h	30	A	-8.9
		B	8.9
> h, <= 2h	30	A	-6.6
		B	5.5
> 2h	30	A	-3.3
		B	3.3

Foundation Option 1: Drilled Concrete Pier

JOB NO.: U0000-0001-171
SUBJECT: CONC. PIER

PROJECT: Links Not Updated Ground Mount

DRILLED CONCRETE PIER DESIGN

Column Reactions:

Max. Shear, V [k]:	1.8	Max. Down, P_d [k]:	3.0
Max. Moment, M [k-ft]:	0.0	Max. Uplift, P_u [k]:	2.6

Pier Properties:

Pier Shape:	Round		
Pier Diameter, b [ft]:	1.5	Volume of Concrete [ft^3]:	11
Top of Pier Elevation [ft]:	0.00	Volume of Concrete [yd^3]:	0.4
Pier Depth, d [ft]:	6.0	Weight of Concrete [k]:	1.6

Soil Properties:

Allow. Bearing Pressure [psf]:	1,500	Optional Parameters for Uplift:	
1/3 increase for short term loads?	No		
		Skin Friction* [psf]:	250
Lateral Bearing, S [pcf]:	150	Top Length to Ignore [ft]:	0
Max. Lateral Bearing (opt'l) [psf]:		1/3 increase for short term loads?	No
Top Depth to Ignore [ft]:	0		
1/3 increase for short term loads?	No	Combine w/ Bearing:	No
1/2" deflection at t/o pier allowed:	Yes		

*per IBC Section 1810.3.3.1.4

Check Bearing:

Bearing Capacity [k]:	7.1	**Bearing capacity OK.**

Check Uplift:

Uplift Capacity [k]:	8.5	**Uplift capacity OK.**

Check Lateral Bearing:

Top of Pier Constrained?:	No	IBC Section1807.3.2.1
Applied Lateral Force, P [lb]:	1,783	
Point of Application, h [ft]:	0.0	
$S_{\_max}$ [psf]:		
S [psf]:	600	
A = 2.34*P/(Sb):	4.64	
Required Pier Depth, d_{reqd} [ft]:	4.60	IBC Eq. 18-1

Result: **Lateral bearing capacity OK.**

Foundation Option 2: Helical Pier

The ground screws and helical piers must be tested to 1.5 times uplift and 2.0 times lateral reactions found in the table below.

Load (ASD)	Value (lbs)	Factor of Safety	Test Value (lbs)
UPLIFT	2563	1.5	3845
LATERAL	1783	2	3566

Foundation Option 3: Ground Screw

The ground screws and helical piers must be tested to 1.5 times uplift and 2.0 times lateral reactions found in the table below.

Load (ASD)	Value (lbs)	Factor of Safety	Test Value (lbs)
UPLIFT	2563	1.5	3845
LATERAL	1783	2	3566

Foundation Option 4: Ballasted Block

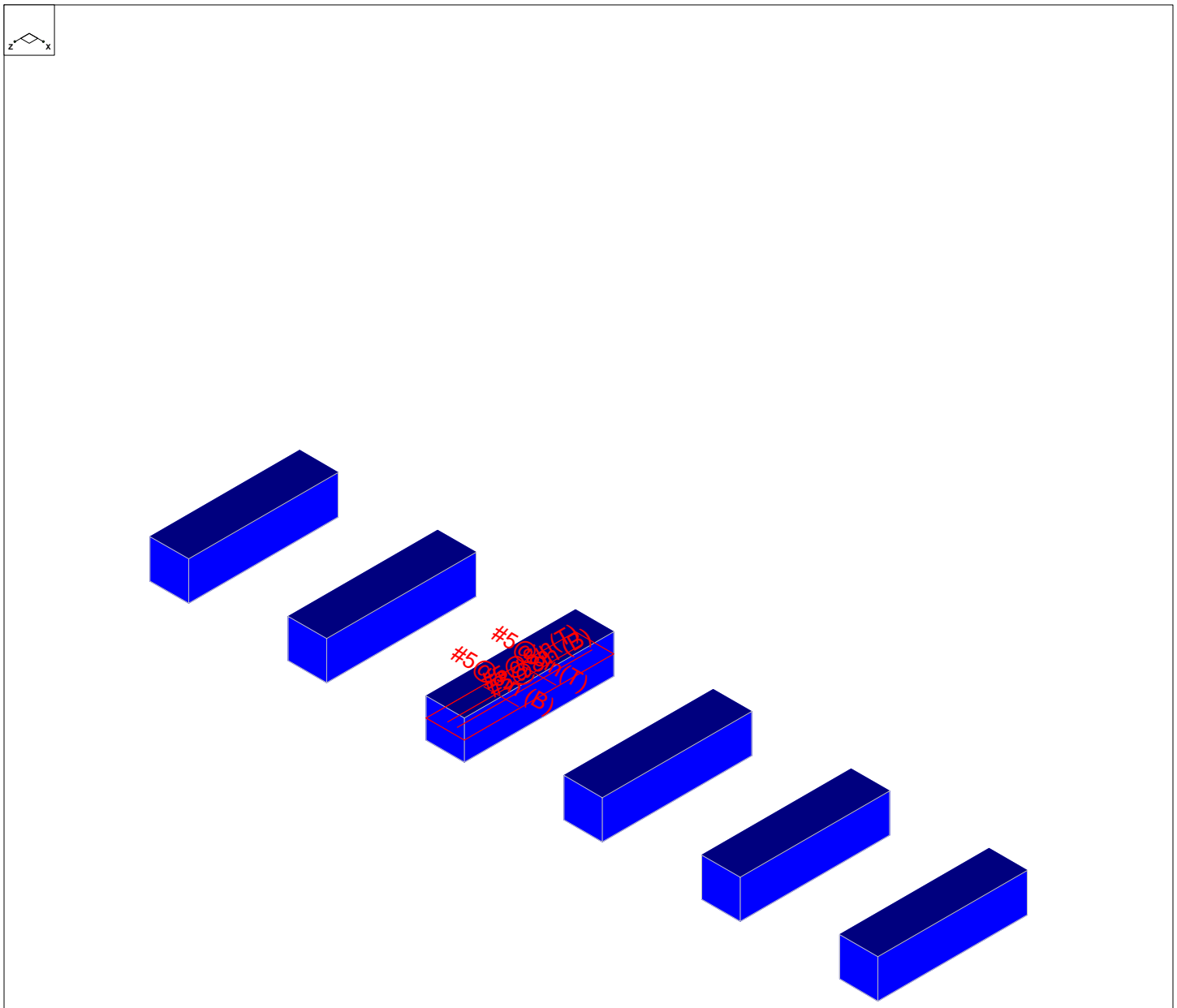

Results for LC 1, 1.0 D

Vector Structural Engineeri...	Ground Mount	SK - 2
STB		Apr 8, 2021 at 10:06 AM
U2716.095.191		Sunmodo Sunturf B2 GM v6 85x45...

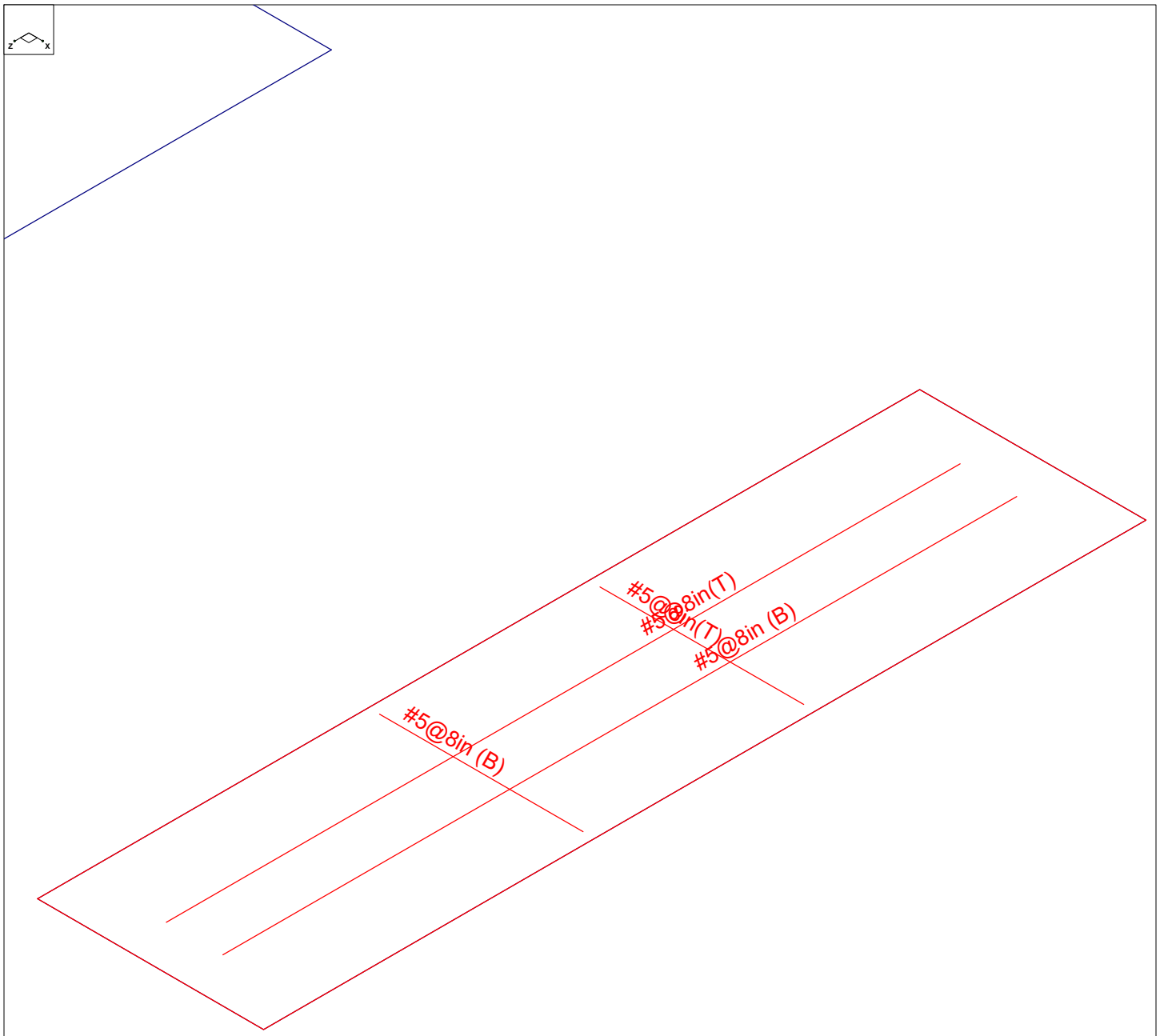

Results for LC 1, 1.0 D

Vector Structural Engineeri...	Ground Mount	SK - 1
STB		Apr 8, 2021 at 10:06 AM
U2716.095.191		Sunmodo Sunturf B2 GM v6 85x45...

(Global) Model Settings

Display Sections for Member Calcs	5
Max Internal Sections for Member Calcs	100
Mesh Size (in)	12
Max Iterations	10
Merge Tolerance (in)	.12
Solver	Sparse Accelerated
Coefficient of Friction	.3
No. of Shear Regions	4
Shear Region Spacing Increment (in)	4
Min 1 Bar Dia Spacing for Beams?	No
Optimize footings for OTM / Sliding?	Yes
Parme Beta Factor	.65
Pile Safety Factor	3
Concrete Stress Block	0
Concrete Rebar Set	Rectangular
Concrete Code	ASTM A615
HR Steel Pile Code	ACI 318-08
Wood Pile Code	AISC 14th (360-10): ASD AWC NDS-15: ASD

Concrete Properties

	Label	E [ksi]	G [ksi]	Nu	Therm (/...	Density[lb/ft^3]	f'c[psi]	Lambda	Flex Stee...	Shear St...
1	Conc3000NW	3156	1372	.15	.6	145	3000	1	60000	60000
2	Conc3500NW	3409	1482	.15	.6	145	3500	1	60000	60000
3	Conc4000NW	3644	1584	.15	.6	145	4000	1	60000	60000
4	Conc3000LW	2085	907	.15	.6	109.999	3000	.75	60000	60000
5	Conc3500LW	2252	979	.15	.6	109.999	3500	.75	60000	60000
6	Conc4000LW	2408	1047	.15	.6	109.999	4000	.75	60000	60000
7	Conc2500NW	3156	1372	.15	.6	145	2500	1	60000	60000

General Design Parameters

	Label	Max Bending Chk	Max Shear Chk	Top Cover[in]	Bottom Cover[in]
1	Typical	1	1	3	3

Slab Rebar Parameters

	Label	Top Bar	Bottom Bar	Max Top Bar Sp...	Min Top Bar Sp...	Max Bot Bar Sp...	Min Bot Bar Sp...	Spacing Incr...	Rebar Options
1	Typical	#5	#5	8	8	8	8	1	Optimize

Soil Definitions

	Label	Subgrade Modulus[lb/ft^3]	Allowable Bearing[psf]	Depth Properties	Default?
1	Default	1e+5	1500	None	Yes

Point Loads and Moments (Cat 1 : DL)

	Label	Direction	Magnitude[lb,lb-ft]
1	R3D_N1_1	X	-25.628
2	R3D_N1_1	Y	233.497
3	R3D_N2_1	X	-10.595
4	R3D_N2_1	Y	207.304
5	R3D_N132_1	Y	257.947
6	R3D_N133_1	X	-1.412
7	R3D_N133_1	Y	298.64
8	R3D_N109_1	Y	257.901

Point Loads and Moments (Cat 1 : DL) (Continued)

	Label	Direction	Magnitude[lb,lb-ft]
9	R3D_N110A_1	X	1.409
10	R3D_N110A_1	Y	298.67
11	R3D_N121_1	Y	273.119
12	R3D_N122_1	Y	282.304
13	R3D_N133B_1	Y	273.103
14	R3D_N134B_1	Y	282.298
15	R3D_N137C	X	25.651
16	R3D_N137C	Y	233.484
17	R3D_N138B	X	10.599
18	R3D_N138B	Y	207.295

Point Loads and Moments (Cat 6 : RLL)

	Label	Direction	Magnitude[lb,lb-ft]
1	R3D_N1_1	X	-76.028
2	R3D_N1_1	Y	584.408
3	R3D_N2_1	X	-32.41
4	R3D_N2_1	Y	569.654
5	R3D_N132_1	X	2.406
6	R3D_N132_1	Y	677.815
7	R3D_N133_1	X	-4.226
8	R3D_N133_1	Y	851.978
9	R3D_N109_1	X	-2.449
10	R3D_N109_1	Y	677.701
11	R3D_N110A_1	X	4.222
12	R3D_N110A_1	Y	852.076
13	R3D_N121_1	Y	726.725
14	R3D_N122_1	X	-2.434
15	R3D_N122_1	Y	800.138
16	R3D_N133B_1	Y	726.68
17	R3D_N134B_1	X	2.429
18	R3D_N134B_1	Y	800.122
19	R3D_N137C	X	76.098
20	R3D_N137C	Y	584.361
21	R3D_N138B	X	32.419
22	R3D_N138B	Y	569.625

Point Loads and Moments (Cat 16 : OL1)

	Label	Direction	Magnitude[lb,lb-ft]
1	R3D_N1_1	X	124.594
2	R3D_N1_1	Y	-1750.571
3	R3D_N1_1	Z	983.107
4	R3D_N2_1	X	51.69
5	R3D_N2_1	Y	-32.216
6	R3D_N2_1	Z	-53.948
7	R3D_N132_1	X	-5.825
8	R3D_N132_1	Y	-2355.082
9	R3D_N132_1	Z	1521.367
10	R3D_N133_1	X	10.11
11	R3D_N133_1	Y	32.577
12	R3D_N133_1	Z	-68.145
13	R3D_N109_1	X	5.892
14	R3D_N109_1	Y	-2355.043
15	R3D_N109_1	Z	1521.386
16	R3D_N110A_1	X	-10.09
17	R3D_N110A_1	Y	32.516
18	R3D_N110A_1	Z	-68.147

Point Loads and Moments (Cat 16 : OL1) (Continued)

	Label	Direction	Magnitude[lb,lb-ft]
19	R3D_N121_1	X	-1.493
20	R3D_N121_1	Y	-2356.612
21	R3D_N121_1	Z	1407.805
22	R3D_N122_1	X	6.94
23	R3D_N122_1	Y	16.305
24	R3D_N122_1	Z	-69.009
25	R3D_N133B_1	X	1.542
26	R3D_N133B_1	Y	-2356.55
27	R3D_N133B_1	Z	1407.774
28	R3D_N134B_1	X	-6.927
29	R3D_N134B_1	Y	16.314
30	R3D_N134B_1	Z	-69.008
31	R3D_N137C	X	-124.711
32	R3D_N137C	Y	-1750.469
33	R3D_N137C	Z	982.989
34	R3D_N138B	X	-51.723
35	R3D_N138B	Y	-32.242
36	R3D_N138B	Z	-53.944

Point Loads and Moments (Cat 17 : OL2)

	Label	Direction	Magnitude[lb,lb-ft]
1	R3D_N1_1	X	170.271
2	R3D_N1_1	Y	-2052.565
3	R3D_N1_1	Z	814.088
4	R3D_N2_1	X	13.252
5	R3D_N2_1	Y	514.859
6	R3D_N2_1	Z	-44.65
7	R3D_N132_1	X	-7.457
8	R3D_N132_1	Y	-2684.89
9	R3D_N132_1	Z	1250.656
10	R3D_N133_1	X	3.287
11	R3D_N133_1	Y	843.002
12	R3D_N133_1	Z	-56.018
13	R3D_N109_1	X	7.545
14	R3D_N109_1	Y	-2684.845
15	R3D_N109_1	Z	1250.676
16	R3D_N110A_1	X	-3.271
17	R3D_N110A_1	Y	842.947
18	R3D_N110A_1	Z	-56.02
19	R3D_N121_1	X	-1.819
20	R3D_N121_1	Y	-2728.143
21	R3D_N121_1	Z	1166.18
22	R3D_N122_1	X	4.508
23	R3D_N122_1	Y	784.572
24	R3D_N122_1	Z	-57.152
25	R3D_N133B_1	X	1.883
26	R3D_N133B_1	Y	-2728.065
27	R3D_N133B_1	Z	1166.152
28	R3D_N134B_1	X	-4.489
29	R3D_N134B_1	Y	784.543
30	R3D_N134B_1	Z	-57.151
31	R3D_N137C	X	-170.423
32	R3D_N137C	Y	-2052.467
33	R3D_N137C	Z	813.993
34	R3D_N138B	X	-13.286
35	R3D_N138B	Y	514.78

Point Loads and Moments (Cat 17 : OL2) (Continued)

	Label	Direction	Magnitude[lb,lb-ft]
36	R3D_N138B	Z	-44.646

Point Loads and Moments (Cat 18 : OL3)

	Label	Direction	Magnitude[lb,lb-ft]
1	R3D_N1_1	X	-145.882
2	R3D_N1_1	Y	2049.663
3	R3D_N1_1	Z	-1151.075
4	R3D_N2_1	X	-60.522
5	R3D_N2_1	Y	37.721
6	R3D_N2_1	Z	63.165
7	R3D_N132_1	X	6.82
8	R3D_N132_1	Y	2757.458
9	R3D_N132_1	Z	-1781.299
10	R3D_N133_1	X	-11.838
11	R3D_N133_1	Y	-38.143
12	R3D_N133_1	Z	79.788
13	R3D_N109_1	X	-6.898
14	R3D_N109_1	Y	2757.412
15	R3D_N109_1	Z	-1781.321
16	R3D_N110A_1	X	11.814
17	R3D_N110A_1	Y	-38.072
18	R3D_N110A_1	Z	79.79
19	R3D_N121_1	X	1.748
20	R3D_N121_1	Y	2759.249
21	R3D_N121_1	Z	-1648.334
22	R3D_N122_1	X	-8.126
23	R3D_N122_1	Y	-19.091
24	R3D_N122_1	Z	80.8
25	R3D_N133B_1	X	-1.805
26	R3D_N133B_1	Y	2759.177
27	R3D_N133B_1	Z	-1648.298
28	R3D_N134B_1	X	8.111
29	R3D_N134B_1	Y	-19.101
30	R3D_N134B_1	Z	80.799
31	R3D_N137C	X	146.018
32	R3D_N137C	Y	2049.544
33	R3D_N137C	Z	-1150.937
34	R3D_N138B	X	60.561
35	R3D_N138B	Y	37.751
36	R3D_N138B	Z	63.16

Point Loads and Moments (Cat 19 : OL4)

	Label	Direction	Magnitude[lb,lb-ft]
1	R3D_N1_1	X	-72.017
2	R3D_N1_1	Y	1282.738
3	R3D_N1_1	Z	-990.354
4	R3D_N2_1	X	-75.633
5	R3D_N2_1	Y	464.219
6	R3D_N2_1	Z	54.364
7	R3D_N132_1	X	3.768
8	R3D_N132_1	Y	1786.666
9	R3D_N132_1	Z	-1539.88
10	R3D_N133_1	X	-14.24
11	R3D_N133_1	Y	617.798
12	R3D_N133_1	Z	68.975
13	R3D_N109_1	X	-3.81

Point Loads and Moments (Cat 19 : OL4) (Continued)

	Label	Direction	Magnitude[lb,lb-ft]
14	R3D_N109_1	Y	1786.638
15	R3D_N109_1	Z	-1539.895
16	R3D_N110A_1	X	14.218
17	R3D_N110A_1	Y	617.855
18	R3D_N110A_1	Z	68.977
19	R3D_N121_1	X	1.039
20	R3D_N121_1	Y	1754.732
21	R3D_N121_1	Z	-1417.855
22	R3D_N122_1	X	-7.98
23	R3D_N122_1	Y	598.347
24	R3D_N122_1	Z	69.512
25	R3D_N133B_1	X	-1.07
26	R3D_N133B_1	Y	1754.692
27	R3D_N133B_1	Z	-1417.827
28	R3D_N134B_1	X	7.973
29	R3D_N134B_1	Y	598.309
30	R3D_N134B_1	Z	69.511
31	R3D_N137C	X	72.09
32	R3D_N137C	Y	1282.646
33	R3D_N137C	Z	-990.233
34	R3D_N138B	X	75.661
35	R3D_N138B	Y	464.199
36	R3D_N138B	Z	54.36

Point Loads and Moments (Cat 20 : OL5)

	Label	Direction	Magnitude[lb,lb-ft]
1	R3D_N1_1	X	-40.899
2	R3D_N1_1	Y	780.079
3	R3D_N1_1	Z	-436.239
4	R3D_N2_1	X	-19.321
5	R3D_N2_1	Y	-5.722
6	R3D_N2_1	Z	21.586
7	R3D_N132_1	X	3.687
8	R3D_N132_1	Y	381.527
9	R3D_N132_1	Z	-254.594
10	R3D_N133_1	Y	-6.982
11	R3D_N133_1	Z	11.463
12	R3D_N109_1	X	1.311
13	R3D_N109_1	Y	794.359
14	R3D_N109_1	Z	-512.578
15	R3D_N110A_1	X	6.402
16	R3D_N110A_1	Y	-12.665
17	R3D_N110A_1	Z	21.831
18	R3D_N121_1	X	3.879
19	R3D_N121_1	Y	436.69
20	R3D_N121_1	Z	-260.988
21	R3D_N122_1	X	3.739
22	R3D_N122_1	Y	-3.299
23	R3D_N122_1	Z	14.718
24	R3D_N133B_1	X	1.304
25	R3D_N133B_1	Y	381.513
26	R3D_N133B_1	Z	-226.775
27	R3D_N134B_1	X	1.023
28	R3D_N134B_1	Z	11.975
29	R3D_N137C	X	30.697
30	R3D_N137C	Y	305.242

Point Loads and Moments (Cat 20 : OL5) (Continued)

	Label	Direction	Magnitude[lb,lb-ft]
31	R3D_N137C	Z	-162.304
32	R3D_N138B	X	8.674
33	R3D_N138B	Y	2.929
34	R3D_N138B	Z	8.964

Point Loads and Moments (Cat 21 : OL6)

	Label	Direction	Magnitude[lb,lb-ft]
1	R3D_N1_1	X	40.899
2	R3D_N1_1	Y	-780.079
3	R3D_N1_1	Z	436.239
4	R3D_N2_1	X	19.321
5	R3D_N2_1	Y	5.722
6	R3D_N2_1	Z	-21.586
7	R3D_N132_1	X	-3.687
8	R3D_N132_1	Y	-381.527
9	R3D_N132_1	Z	254.594
10	R3D_N133_1	Y	6.982
11	R3D_N133_1	Z	-11.463
12	R3D_N109_1	X	-1.311
13	R3D_N109_1	Y	-794.359
14	R3D_N109_1	Z	512.578
15	R3D_N110A_1	X	-6.402
16	R3D_N110A_1	Y	12.665
17	R3D_N110A_1	Z	-21.831
18	R3D_N121_1	X	-3.879
19	R3D_N121_1	Y	-436.69
20	R3D_N121_1	Z	260.988
21	R3D_N122_1	X	-3.739
22	R3D_N122_1	Y	3.299
23	R3D_N122_1	Z	-14.718
24	R3D_N133B_1	X	-1.304
25	R3D_N133B_1	Y	-381.513
26	R3D_N133B_1	Z	226.775
27	R3D_N134B_1	X	-1.023
28	R3D_N134B_1	Z	-11.975
29	R3D_N137C	X	-30.697
30	R3D_N137C	Y	-305.242
31	R3D_N137C	Z	162.304
32	R3D_N138B	X	-8.674
33	R3D_N138B	Y	-2.929
34	R3D_N138B	Z	-8.964

Slabs

	Label	Thickness [in]	Material	Local Axis Angle ...	Analysis Offset [in]	Passive Pressur...	Soil Overburden [psf]
1	S1	30	Conc2500NW	0	0	0	0
2	S2	30	Conc2500NW	0	0	0	0
3	S3	30	Conc2500NW	0	0	0	0
4	S4	30	Conc2500NW	0	0	0	0
5	S5	30	Conc2500NW	0	0	0	0
6	S6	30	Conc2500NW	0	0	0	0

Load Combinations

	Label	Solve	Service	A...	SF	Cat...	Fa...	Cat...	Fa...	Cat...	Fa...	Cat...	Fa...	Cat...	Fa...	Cat...	Fa...	Cat...	Fa...	Cat...	Fa...	C...	F...	C...	F...
1	1.0 D	Yes	Yes		1.5	DL	1																		
2	1.0 D + 1....	Yes	Yes		1.5	DL	1	RLL	1																

Load Combinations (Continued)

	Label	Solve	Service	A...	SF	Cat...	Fa...	Cat...	Fa...	Cat...	Fa...	Cat...	Fa...	Cat...	Fa...	Cat...	Fa...	Cat...	Fa...	Cat...	Fa...	C...	F...	C...	F...
3	1.0 D + 0....	Yes	Yes		1.5	DL	1	RLL		OL1	1														
4	1.0 D + 0....	Yes	Yes		1.5	DL	1	RLL		OL2	1														
5	1.0 D + 0....	Yes	Yes		1.5	DL	1	RLL		OL3	1														
6	1.0 D + 0....	Yes	Yes		1.5	DL	1	RLL		OL4	1														
7	1.0 D + 0....	Yes	Yes		1.5	DL	1	RLL		OL5	1														
8	1.0 D + 0....	Yes	Yes		1.5	DL	1	RLL		OL6	1														
9	1.0 D + 0....	Yes	Yes		1.5	DL	1	RLL	.75	OL1	.75														
10	1.0 D + 0....	Yes	Yes		1.5	DL	1	RLL	.75	OL2	.75														
11	1.0 D + 0....	Yes	Yes		1.5	DL	1	RLL	.75	OL3	.75														
12	1.0 D + 0....	Yes	Yes		1.5	DL	1	RLL	.75	OL4	.75														
13	1.0 D + 0....	Yes	Yes		1.5	DL	1	RLL	.75	OL5	.75														
14	1.0 D + 0....	Yes	Yes		1.5	DL	1	RLL	.75	OL6	.75														
15	0.9 D + 0....	Yes	Yes			DL	.9	RLL		OL1	1														
16	0.9 D + 0....	Yes	Yes			DL	.9	RLL		OL2	1														
17	0.9 D + 0....	Yes	Yes			DL	.9	RLL		OL3	1														
18	0.9 D + 0....	Yes	Yes			DL	.9	RLL		OL4	1														
19	0.9 D + 0....	Yes	Yes			DL	.9	RLL		OL5	1														
20	0.9 D + 0....	Yes	Yes			DL	.9	RLL		OL6	1														
21																									
22	1.4D	Yes				DL	1.4																		
23	1.2D+1.6SL	Yes				DL	1.2	RLL	1.6																
24	1.2D+1.6S...	Yes				DL	1.2	RLL	1.6	OL1	.8														
25	1.2D+1.6S...	Yes				DL	1.2	RLL	1.6	OL2	.8														
26	1.2D+1.6S...	Yes				DL	1.2	RLL	1.6	OL3	.8														
27	1.2D+1.6S...	Yes				DL	1.2	RLL	1.6	OL4	.8														
28	1.2D+1.6S...	Yes				DL	1.2	RLL	1.6	OL5	.8														
29	1.2D+1.6S...	Yes				DL	1.2	RLL	1.6	OL6	.8														
30	1.2D+1.6...	Yes				DL	1.2	RLL	.5	OL1	1.6														
31	1.2D-1.6...	Yes				DL	1.2	RLL	.5	OL2	1.6														
32	1.2D+1.6...	Yes				DL	1.2	RLL	.5	OL3	1.6														
33	1.2D-1.6...	Yes				DL	1.2	RLL	.5	OL4	1.6														
34	1.2D+1.6...	Yes				DL	1.2	RLL	.5	OL5	1.6														
35	1.2D-1.6...	Yes				DL	1.2	RLL	.5	OL6	1.6														
36	1.0D+1.6...	Yes				DL	1			OL1	1.6														
37	1.0D-1.6Wx	Yes				DL	1			OL2	1.6														
38	1.0D+1.6...	Yes				DL	1			OL3	1.6														
39	1.0D-1.6Wz	Yes				DL	1			OL4	1.6														
40	1.0D+1.6...	Yes				DL	1			OL5	1.6														
41	1.0D-1.6...	Yes				DL	1			OL6	1.6														

Design Strips

	Label	Rebar Angle from Pl...	No. of Design Cuts	Design Rule
1	DS1	0	50	Typical
2	DS2	90	50	Typical

Load Categories

	Category	Point Loads	Line Loads	Area Loads
1	DL	18		
2	RLL	22		
3	OL1	36		
4	OL2	36		
5	OL3	36		
6	OL4	36		
7	OL5	34		
8	OL6	34		

Strip Reinforcing

	Label	UC Top	LC	Top Bars	Governing ...	UC Bot	LC	Bot B...	Gover...	UC Shear	LC	Governing De...
1	DS1	.022	32	#5@8in	DS1-X25	.018	37	#5@8in	DS1-...	.032	32	DS1-X15
2	DS2	.002	36	#5@8in	DS2-X15	.003	32	#5@8in	DS2-...	.006	32	DS2-X21

Slab Overturning Safety Factors (By Combination)

	LC	Slab	Angle[deg]	Mo-xx[lb-ft]	Ms-xx[lb-ft]	Mo-zz[lb-ft]	Ms-zz[lb-ft]	Ms-xx/Mo-xx	Ms-zz/Mo-zz
1	1	S1	0	0	45220.034	0	11686.499	9.999+	9.999+
2	1	S2	0	0	46054.063	0	11737.131	9.999+	9.999+
3	1	S3	0	0	45932.418	0	11739.22	9.999+	9.999+
4	1	S4	0	0	45932.346	0	11739.192	9.999+	9.999+
5	1	S5	0	0	46053.861	0	11744.202	9.999+	9.999+
6	1	S6	0	0	45219.946	0	11505.292	9.999+	9.999+
7	2	S1	0	0	51032.412	0	13400.17	9.999+	9.999+
8	2	S2	0	0	54469.799	0	13644.921	9.999+	9.999+
9	2	S3	0	0	53963.143	0	13653.883	9.999+	9.999+
10	2	S4	0	0	53962.871	0	13641.622	9.999+	9.999+
11	2	S5	0	0	54468.897	0	13660.994	9.999+	9.999+
12	2	S6	0	0	51032.005	0	12676.481	9.999+	9.999+
13	3	S1	0	16943.24	45228.462	2669.196	11686.499	2.669	4.378
14	3	S2	0	23225.99	45523.198	2913.654	11744.178	1.96	4.031
15	3	S3	0	22969.162	45633.651	2939.002	11739.22	1.987	3.994
16	3	S4	0	22968.568	45633.511	2938.759	11739.192	1.987	3.995
17	3	S5	0	23226.209	45523.549	2913.846	11744.202	1.96	4.03
18	3	S6	0	16942.135	45228.35	2669.475	11686.539	2.67	4.378
19	4	S1	0	18513.476	45228.462	2380.939	11686.499	2.443	4.908
20	4	S2	0	24517.439	45523.198	2313.056	11737.131	1.857	5.074
21	4	S3	0	24722.566	45633.651	2436.186	11739.22	1.846	4.819
22	4	S4	0	24721.876	45633.511	2435.918	11739.192	1.846	4.819
23	4	S5	0	24517.716	45523.549	2312.786	11737.145	1.857	5.075
24	4	S6	0	18512.512	45228.35	2381.381	11686.539	2.443	4.907
25	5	S1	0	0	45733.995	0	14811.738	9.999+	9.999+
26	5	S2	0	680.635	46054.063	0	15124.018	9.999+	9.999+
27	5	S3	0	176.954	45932.418	0	15180.363	9.999+	9.999+
28	5	S4	0	177.063	45932.346	0	15148.523	9.999+	9.999+
29	5	S5	0	681.142	46053.861	0	15155.891	9.999+	9.999+
30	5	S6	0	0	45734.337	0	13597.963	9.999+	9.999+
31	6	S1	0	0	48759.181	0	14239.319	9.999+	9.999+
32	6	S2	0	0	50314.063	0	14716.728	9.999+	9.999+
33	6	S3	0	0	50282.957	0	14697.92	9.999+	9.999+
34	6	S4	0	0	50282.565	0	14663.186	9.999+	9.999+
35	6	S5	0	0	50313.43	0	14775.962	9.999+	9.999+
36	6	S6	0	0	48759.082	0	13319.472	9.999+	9.999+
37	7	S1	0	0	45238.444	0	12804.995	9.999+	9.999+
38	7	S2	0	212.346	46054.063	0	12694.966	9.999+	9.999+
39	7	S3	0	25.897	45932.418	0	12261.913	9.999+	9.999+
40	7	S4	0	0	45935.822	0	12210.266	9.999+	9.999+
41	7	S5	0	128.427	46053.861	0	12203.165	9.999+	9.999+
42	7	S6	0	0	45294.652	0	11792.078	9.999+	9.999+
43	8	S1	0	7531.587	45228.462	1118.497	11686.499	6.005	9.999+
44	8	S2	0	7833.882	45523.198	996.401	11744.178	5.811	9.999+
45	8	S3	0	4251.464	45633.651	560.784	11739.22	9.999+	9.999+
46	8	S4	0	3716.279	45633.511	482.708	11739.192	9.999+	9.999+
47	8	S5	0	3780.242	45523.549	477.398	11737.145	9.999+	9.999+
48	8	S6	0	2929.966	45228.35	483.642	11686.539	9.999+	9.999+
49	9	S1	0	12707.43	49308.268	2001.897	12971.752	3.88	6.48
50	9	S2	0	17419.493	50397.911	2185.24	13181.667	2.893	6.032
51	9	S3	0	17226.872	50775.809	2204.252	13175.217	2.947	5.977

Slab Overturning Safety Factors (By Combination) (Continued)

	LC	Slab	Angle[deg]	Mo-xx[lb-ft]	Ms-xx[lb-ft]	Mo-zz[lb-ft]	Ms-zz[lb-ft]	Ms-xx/Mo-xx	Ms-zz/Mo-zz
52	9	S4	0	17226.426	50775.377	2204.069	13175.124	2.948	5.978
53	9	S5	0	17419.656	50398.903	2185.384	13181.796	2.893	6.032
54	9	S6	0	12706.601	49307.841	2002.106	12971.871	3.88	6.479
55	10	S1	0	13885.107	49308.268	1785.704	12971.752	3.551	7.264
56	10	S2	0	18388.079	50397.911	1734.792	13167.974	2.741	7.591
57	10	S3	0	18541.924	50775.809	1827.139	13175.217	2.738	7.211
58	10	S4	0	18541.407	50775.377	1826.939	13175.124	2.738	7.212
59	10	S5	0	18388.287	50398.903	1734.59	13167.913	2.741	7.591
60	10	S6	0	13884.384	49307.841	1786.036	12971.871	3.551	7.263
61	11	S1	0	0	49964.788	0	15315.681	9.999+	9.999+
62	11	S2	0	510.476	52365.865	0	15708.139	9.999+	9.999+
63	11	S3	0	132.716	51955.462	0	15756.074	9.999+	9.999+
64	11	S4	0	132.797	51955.24	0	15723.012	9.999+	9.999+
65	11	S5	0	510.857	52365.138	0	15740.562	9.999+	9.999+
66	11	S6	0	0	49964.784	0	13953.187	9.999+	9.999+
67	12	S1	0	0	52233.678	0	14886.367	9.999+	9.999+
68	12	S2	0	0	55560.865	0	15402.672	9.999+	9.999+
69	12	S3	0	0	55218.367	0	15394.242	9.999+	9.999+
70	12	S4	0	0	55217.904	0	15359.01	9.999+	9.999+
71	12	S5	0	0	55559.814	0	15455.616	9.999+	9.999+
72	12	S6	0	0	52233.342	0	13744.319	9.999+	9.999+
73	13	S1	0	0	49593.125	0	13810.625	9.999+	9.999+
74	13	S2	0	159.26	52365.865	0	13886.35	9.999+	9.999+
75	13	S3	0	19.423	51955.462	0	13567.237	9.999+	9.999+
76	13	S4	0	0	51957.846	0	13519.32	9.999+	9.999+
77	13	S5	0	96.32	52365.138	0	13526.018	9.999+	9.999+
78	13	S6	0	0	49635.02	0	12598.773	9.999+	9.999+
79	14	S1	0	5648.69	49308.268	838.873	12971.752	8.729	9.999+
80	14	S2	0	5875.411	50397.911	747.301	13181.667	8.578	9.999+
81	14	S3	0	3188.598	50775.809	420.588	13166.089	9.999+	9.999+
82	14	S4	0	2787.21	50775.377	362.031	13175.124	9.999+	9.999+
83	14	S5	0	2835.182	50398.903	358.049	13167.913	9.999+	9.999+
84	14	S6	0	2197.475	49307.841	362.731	12971.871	9.999+	9.999+
85	15	S1	0	16943.24	40705.615	2669.196	10517.849	2.402	3.94
86	15	S2	0	23225.99	40970.878	2913.654	10569.76	1.764	3.628
87	15	S3	0	22969.162	41070.286	2939.002	10565.298	1.788	3.595
88	15	S4	0	22968.568	41070.16	2938.759	10565.273	1.788	3.595
89	15	S5	0	23226.209	40971.194	2913.846	10569.782	1.764	3.627
90	15	S6	0	16942.135	40705.515	2669.475	10517.885	2.403	3.94
91	16	S1	0	18513.476	40705.615	2380.939	10517.849	2.199	4.418
92	16	S2	0	24517.439	40970.878	2313.056	10563.418	1.671	4.567
93	16	S3	0	24722.566	41070.286	2436.186	10565.298	1.661	4.337
94	16	S4	0	24721.876	41070.16	2435.918	10565.273	1.661	4.337
95	16	S5	0	24517.716	40971.194	2312.786	10563.43	1.671	4.567
96	16	S6	0	18512.512	40705.515	2381.381	10517.885	2.199	4.417
97	17	S1	0	0	41211.991	0	13643.088	9.999+	9.999+
98	17	S2	0	680.635	41448.657	0	13950.305	9.999+	9.999+
99	17	S3	0	176.954	41339.176	0	14006.441	9.999+	9.999+
100	17	S4	0	177.063	41339.112	0	13974.603	9.999+	9.999+
101	17	S5	0	681.142	41448.475	0	13981.471	9.999+	9.999+
102	17	S6	0	0	41212.342	0	12447.434	9.999+	9.999+
103	18	S1	0	0	44237.178	0	13070.669	9.999+	9.999+
104	18	S2	0	0	45708.657	0	13543.015	9.999+	9.999+
105	18	S3	0	0	45689.715	0	13523.998	9.999+	9.999+
106	18	S4	0	0	45689.33	0	13489.267	9.999+	9.999+
107	18	S5	0	0	45708.044	0	13601.542	9.999+	9.999+
108	18	S6	0	0	44237.087	0	12168.943	9.999+	9.999+

Slab Overturning Safety Factors (By Combination) (Continued)

	LC	Slab	Angle[deg]	Mo-xx[lb-ft]	Ms-xx[lb-ft]	Mo-zz[lb-ft]	Ms-zz[lb-ft]	Ms-xx/Mo-xx	Ms-zz/Mo-zz
109	19	S1	0	0	40716.44	0	11636.346	9.999+	9.999+
110	19	S2	0	212.346	41448.657	0	11521.253	9.999+	9.999+
111	19	S3	0	25.897	41339.176	0	11087.991	9.999+	9.999+
112	19	S4	0	0	41342.587	0	11036.346	9.999+	9.999+
113	19	S5	0	128.427	41448.475	0	11028.745	9.999+	9.999+
114	19	S6	0	0	40772.657	0	10641.548	9.999+	9.999+
115	20	S1	0	7531.587	40705.615	1118.497	10517.849	5.405	9.404
116	20	S2	0	7833.882	40970.878	996.401	10569.76	5.23	9.999+
117	20	S3	0	4251.464	41070.286	560.784	10565.298	9.66	9.999+
118	20	S4	0	3716.279	41070.16	482.708	10565.273	9.999+	9.999+
119	20	S5	0	3780.242	40971.194	477.398	10563.43	9.999+	9.999+
120	20	S6	0	2929.966	40705.515	483.642	10517.885	9.999+	9.999+

Slab Sliding Safety Factors (By Combination)

	LC	Slab	Angle[deg]	Va-xx[lb]	Vr-xx[lb]	Va-zz[lb]	Vr-zz[lb]	SR-xx	SR-zz
1	1	S1	0	36.223	2783.026	0	2783.026	9.999+	9.999+
2	1	S2	0	1.409	2817.757	0	2817.757	9.999+	9.999+
3	1	S3	0	0	2817.413	0	2817.413	9.999+	9.999+
4	1	S4	0	0	2817.406	0	2817.406	9.999+	9.999+
5	1	S5	0	1.412	2817.762	0	2817.762	9.999+	9.999+
6	1	S6	0	36.249	2783.02	0	2783.02	9.999+	9.999+
7	2	S1	0	144.661	3129.244	0	3129.244	9.999+	9.999+
8	2	S2	0	3.182	3276.69	0	3276.69	9.999+	9.999+
9	2	S3	0	2.434	3275.471	0	3275.471	9.999+	9.999+
10	2	S4	0	2.429	3275.447	0	3275.447	9.999+	9.999+
11	2	S5	0	3.232	3276.7	0	3276.7	9.999+	9.999+
12	2	S6	0	144.767	3129.215	0	3129.215	9.999+	9.999+
13	3	S1	0	140.062	2248.19	929.159	2248.19	9.999+	2.42
14	3	S2	0	2.789	2120.999	1453.239	2120.999	9.999+	1.459
15	3	S3	0	5.447	2115.321	1338.795	2115.321	9.999+	1.58
16	3	S4	0	5.386	2115.335	1338.766	2115.335	9.999+	1.58
17	3	S5	0	2.874	2121.01	1453.222	2121.01	9.999+	1.46
18	3	S6	0	140.185	2248.206	929.046	2248.206	9.999+	2.42
19	4	S1	0	147.3	2321.714	769.438	2321.714	9.999+	3.017
20	4	S2	0	5.683	2265.188	1194.656	2265.188	9.999+	1.896
21	4	S3	0	2.689	2234.341	1109.028	2234.341	9.999+	2.015
22	4	S4	0	2.606	2234.35	1109	2234.35	9.999+	2.015
23	4	S5	0	5.582	2265.195	1194.638	2265.195	9.999+	1.896
24	4	S6	0	147.459	2321.713	769.347	2321.713	9.999+	3.018
25	5	S1	0	242.627	3409.241	1087.91	3409.241	9.999+	3.134
26	5	S2	0	6.325	3633.559	1701.531	3633.559	9.999+	2.135
27	5	S3	0	6.378	3639.46	1567.534	3639.46	9.999+	2.322
28	5	S4	0	6.306	3639.429	1567.5	3639.429	9.999+	2.322
29	5	S5	0	6.43	3633.556	1701.512	3633.556	9.999+	2.135
30	5	S6	0	242.828	3409.208	1087.777	3409.208	9.999+	3.134
31	6	S1	0	183.873	3307.113	935.99	3307.113	9.999+	3.533
32	6	S2	0	11.817	3539.105	1470.918	3539.105	9.999+	2.406
33	6	S3	0	6.941	3523.336	1348.343	3523.336	9.999+	2.613
34	6	S4	0	6.903	3523.306	1348.316	3523.306	9.999+	2.613
35	6	S5	0	11.883	3539.101	1470.905	3539.101	9.999+	2.406
36	6	S6	0	184	3307.073	935.874	3307.073	9.999+	3.534
37	7	S1	0	96.443	3015.333	414.653	3015.333	9.999+	7.272
38	7	S2	0	9.123	3052.265	490.747	3052.265	9.999+	6.22
39	7	S3	0	7.618	2947.43	246.27	2947.43	9.999+	9.999+
40	7	S4	0	2.327	2931.86	214.8	2931.86	9.999+	9.999+
41	7	S5	0	2.276	2930.125	243.131	2930.125	9.999+	9.999+

Slab Sliding Safety Factors (By Combination) (Continued)

	LC	Slab	Angle[deg]	Va-xx[lb]	Vr-xx[lb]	Va-zz[lb]	Vr-zz[lb]	SR-xx	SR-zz
42	7	S6	0	75.621	2875.471	153.34	2875.471	9.999+	9.999+
43	8	S1	0	23.997	2550.719	414.653	2550.719	9.999+	6.151
44	8	S2	0	6.304	2583.249	490.747	2583.249	9.999+	5.264
45	8	S3	0	7.618	2687.395	246.27	2687.395	9.999+	9.999+
46	8	S4	0	2.327	2702.952	214.8	2702.952	9.999+	9.999+
47	8	S5	0	5.099	2705.398	243.131	2705.398	9.999+	9.999+
48	8	S6	0	3.122	2690.568	153.34	2690.568	9.999+	9.999+
49	9	S1	0	14.662	2641.563	696.869	2641.563	9.999+	3.791
50	9	S2	0	.41	2639.388	1089.929	2639.388	9.999+	2.422
51	9	S3	0	2.26	2634.388	1004.097	2634.388	9.999+	2.624
52	9	S4	0	2.217	2634.384	1004.074	2634.384	9.999+	2.624
53	9	S5	0	.438	2639.402	1089.917	2639.402	9.999+	2.422
54	9	S6	0	14.688	2641.557	696.784	2641.557	9.999+	3.791
55	10	S1	0	20.091	2696.706	577.079	2696.706	9.999+	4.673
56	10	S2	0	5.944	2747.53	895.992	2747.53	9.999+	3.066
57	10	S3	0	.191	2723.653	831.771	2723.653	9.999+	3.275
58	10	S4	0	.133	2723.644	831.75	2723.644	9.999+	3.275
59	10	S5	0	5.904	2747.54	895.978	2747.54	9.999+	3.067
60	10	S6	0	20.144	2696.687	577.01	2696.687	9.999+	4.674
61	11	S1	0	272.354	3512.351	815.933	3512.351	9.999+	4.305
62	11	S2	0	6.425	3773.809	1276.149	3773.809	9.999+	2.957
63	11	S3	0	6.609	3777.492	1175.651	3777.492	9.999+	3.213
64	11	S4	0	6.551	3777.454	1175.625	3777.454	9.999+	3.213
65	11	S5	0	6.54	3773.811	1276.134	3773.811	9.999+	2.957
66	11	S6	0	272.572	3512.308	815.833	3512.308	9.999+	4.305
67	12	S1	0	228.288	3435.755	701.992	3435.755	9.999+	4.894
68	12	S2	0	10.545	3702.968	1103.188	3702.968	9.999+	3.357
69	12	S3	0	7.031	3690.4	1011.257	3690.4	9.999+	3.649
70	12	S4	0	6.999	3690.362	1011.237	3690.362	9.999+	3.649
71	12	S5	0	10.631	3702.969	1103.178	3702.969	9.999+	3.357
72	12	S6	0	228.451	3435.707	701.905	3435.707	9.999+	4.895
73	13	S1	0	162.716	3216.92	310.99	3216.92	9.999+	9.999+
74	13	S2	0	8.524	3337.838	368.06	3337.838	9.999+	9.069
75	13	S3	0	3.888	3258.47	184.702	3258.47	9.999+	9.999+
76	13	S4	0	3.567	3246.777	161.1	3246.777	9.999+	9.999+
77	13	S5	0	.011	3246.238	182.348	3246.238	9.999+	9.999+
78	13	S6	0	147.166	3112.005	115.005	3112.005	9.999+	9.999+
79	14	S1	0	72.386	2868.459	310.99	2868.459	9.999+	9.224
80	14	S2	0	3.046	2986.076	368.06	2986.076	9.999+	8.113
81	14	S3	0	7.539	3063.444	184.702	3063.444	9.999+	9.999+
82	14	S4	0	.077	3075.096	161.1	3075.096	9.999+	9.999+
83	14	S5	0	5.542	3077.693	182.348	3077.693	9.999+	9.999+
84	14	S6	0	88.109	2973.328	115.005	2973.328	9.999+	9.999+
85	15	S1	0	143.684	1969.887	929.159	1969.887	9.999+	2.12
86	15	S2	0	2.929	1839.223	1453.239	1839.223	9.999+	1.266
87	15	S3	0	5.447	1833.579	1338.795	1833.579	9.999+	1.37
88	15	S4	0	5.386	1833.595	1338.766	1833.595	9.999+	1.37
89	15	S5	0	3.015	1839.234	1453.222	1839.234	9.999+	1.266
90	15	S6	0	143.81	1969.904	929.046	1969.904	9.999+	2.12
91	16	S1	0	150.922	2043.411	769.438	2043.411	9.999+	2.656
92	16	S2	0	5.542	1983.412	1194.656	1983.412	9.999+	1.66
93	16	S3	0	2.689	1952.6	1109.028	1952.6	9.999+	1.761
94	16	S4	0	2.606	1952.609	1109	1952.609	9.999+	1.761
95	16	S5	0	5.441	1983.419	1194.638	1983.419	9.999+	1.66
96	16	S6	0	151.084	2043.411	769.347	2043.411	9.999+	2.656
97	17	S1	0	239.005	3130.938	1087.91	3130.938	9.999+	2.878
98	17	S2	0	6.184	3351.784	1701.531	3351.784	9.999+	1.97

Slab Sliding Safety Factors (By Combination) (Continued)

	LC	Slab	Angle[deg]	Va-xx[lb]	Vr-xx[lb]	Va-zz[lb]	Vr-zz[lb]	SR-xx	SR-zz
99	17	S3	0	6.378	3357.719	1567.534	3357.719	9.999+	2.142
100	17	S4	0	6.306	3357.688	1567.5	3357.688	9.999+	2.142
101	17	S5	0	6.288	3351.78	1701.512	3351.78	9.999+	1.97
102	17	S6	0	239.203	3130.906	1087.777	3130.906	9.999+	2.878
103	18	S1	0	180.25	3028.81	935.99	3028.81	9.999+	3.236
104	18	S2	0	11.676	3257.329	1470.918	3257.329	9.999+	2.214
105	18	S3	0	6.941	3241.595	1348.343	3241.595	9.999+	2.404
106	18	S4	0	6.903	3241.566	1348.316	3241.566	9.999+	2.404
107	18	S5	0	11.742	3257.325	1470.905	3257.325	9.999+	2.215
108	18	S6	0	180.375	3028.771	935.874	3028.771	9.999+	3.236
109	19	S1	0	92.821	2737.03	414.653	2737.03	9.999+	6.601
110	19	S2	0	8.982	2770.49	490.747	2770.49	9.999+	5.645
111	19	S3	0	7.618	2665.689	246.27	2665.689	9.999+	9.999+
112	19	S4	0	2.327	2650.119	214.8	2650.119	9.999+	9.999+
113	19	S5	0	2.417	2648.349	243.131	2648.349	9.999+	9.999+
114	19	S6	0	71.996	2597.169	153.34	2597.169	9.999+	9.999+
115	20	S1	0	27.619	2272.416	414.653	2272.416	9.999+	5.48
116	20	S2	0	6.445	2301.473	490.747	2301.473	9.999+	4.69
117	20	S3	0	7.618	2405.654	246.27	2405.654	9.999+	9.768
118	20	S4	0	2.327	2421.212	214.8	2421.212	9.999+	9.999+
119	20	S5	0	4.957	2423.622	243.131	2423.622	9.999+	9.968
120	20	S6	0	6.747	2412.266	153.34	2412.266	9.999+	9.999+

Envelope Slab Soil Pressures

	Label	UC	LC	Soil Pressure[psf]	Allowable Bearing[psf]	Point
1	S1	.426	5	638.606	1500	N170
2	S2	.487	5	730.586	1500	N177
3	S3	.488	5	732.606	1500	N184
4	S4	.488	5	732.595	1500	N191
5	S5	.487	5	730.603	1500	N198
6	S6	.426	5	638.588	1500	N205

1.Project information

Customer company:
Customer contact name:
Customer e-mail:
Comment:

Project description:
Location:
Fastening description:

2. Input Data & Anchor Parameters

General
Design method:ACI 318-08
Units: Imperial units

Anchor Information:
Anchor type: Bonded anchor
Material: F1554 Grade 36
Diameter (inch): 0.375
Effective Embedment depth, h_{ef} (inch): 4.000
Code report: ICC-ES ESR-4057
Anchor category: -
Anchor ductility: Yes
h_{min} (inch): 5.25
c_{ac} (inch): 7.12
C_{min} (inch): 1.75
S_{min} (inch): 3.00

Base Material
Concrete: Normal-weight
Concrete thickness, h (inch): 30.00
State: Cracked
Compressive strength, f'_c (psi): 2500
$\Psi_{c,V}$: 1.0
Reinforcement condition: B tension, B shear
Supplemental reinforcement: Not applicable
Reinforcement provided at corners: No
Ignore concrete breakout in tension: No
Ignore concrete breakout in shear: No
Hole condition: Dry concrete
Inspection: Periodic
Temperature range, Short/Long: 150/110°F
Ignore 6do requirement: Not applicable
Build-up grout pad: No

Base Plate
Length x Width x Thickness (inch): 4.75 x 4.75 x 0.31

Recommended Anchor
Anchor Name: SET-3G - SET-3G w/ 3/8"Ø F1554 Gr. 36
Code Report: ICC-ES ESR-4057

Load and Geometry
Load factor source: ACI 318 Section 9.2
Load combination: not set
Seismic design: No
Anchors subjected to sustained tension: No
Apply entire shear load at front row: No
Anchors only resisting wind and/or seismic loads: No

Strength level loads:

N_{ua} [lb]: 4120
V_{uax} [lb]: 540
V_{uay} [lb]: -2434
M_{ux} [ft-lb]: 0
M_{uy} [ft-lb]: 0
M_{uz} [ft-lb]: 0

<Figure 1>

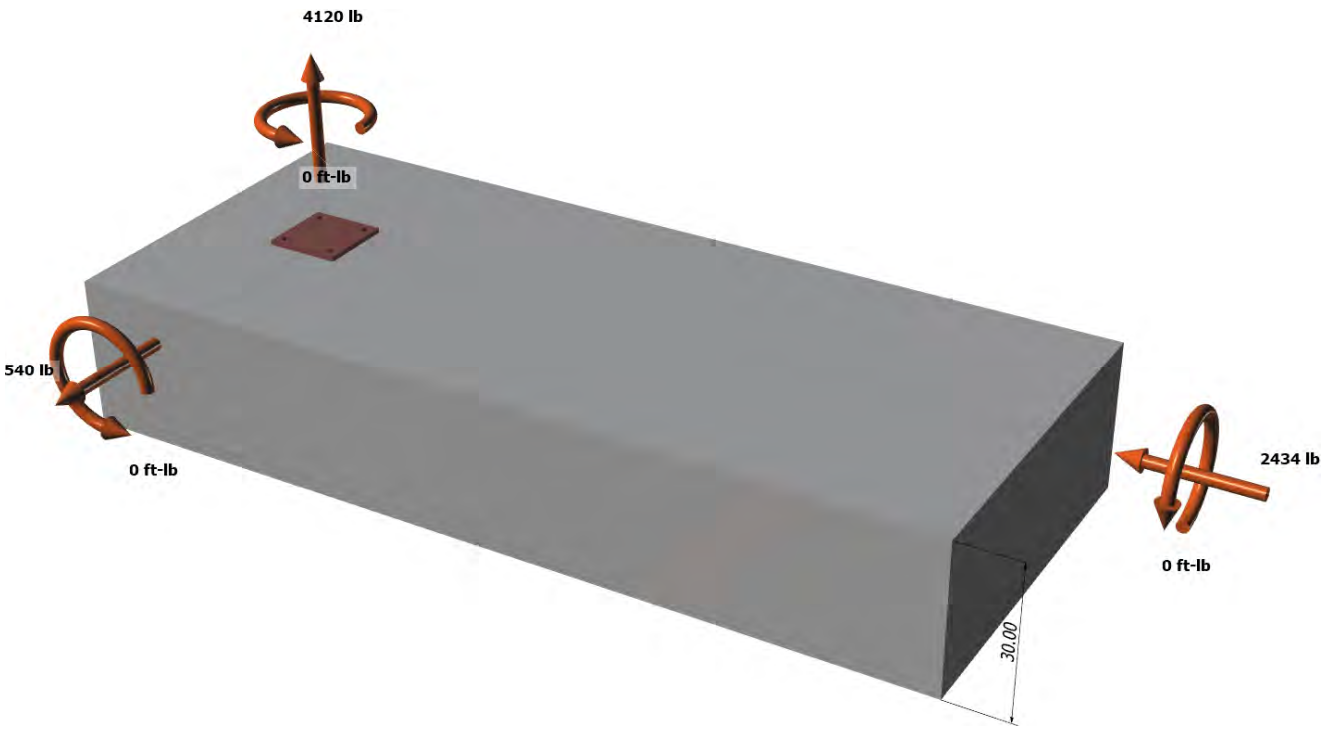

<Figure 2>

3. Resulting Anchor Forces

Anchor	Tension load, N_{ua} (lb)	Shear load x, V_{uax} (lb)	Shear load y, V_{uay} (lb)	Shear load combined, $\sqrt{(V_{uax})^2+(V_{uay})^2}$ (lb)
1	1030.0	135.0	-608.5	623.3
2	1030.0	135.0	-608.5	623.3
3	1030.0	135.0	-608.5	623.3
4	1030.0	135.0	-608.5	623.3
Sum	4120.0	540.0	-2434.0	2493.2

Maximum concrete compression strain (‰): 0.00
Maximum concrete compression stress (psi): 0
Resultant tension force (lb): 4120
Resultant compression force (lb): 0
Eccentricity of resultant tension forces in x-axis, e'_{Nx} (inch): 0.00
Eccentricity of resultant tension forces in y-axis, e'_{Ny} (inch): 0.00
Eccentricity of resultant shear forces in x-axis, e'_{Vx} (inch): 0.00
Eccentricity of resultant shear forces in y-axis, e'_{Vy} (inch): 0.00

<Figure 3>

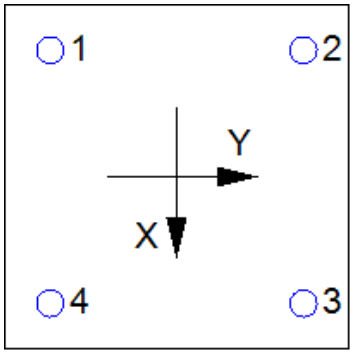

4. Steel Strength of Anchor in Tension (Sec. D.5.1)

N_{sa} (lb)	ϕ	ϕN_{sa} (lb)
4525	0.75	3394

5. Concrete Breakout Strength of Anchor in Tension (Sec. D.5.2)

$N_b = k_c \lambda \sqrt{f'_c} h_{ef}^{1.5}$ (Eq. D-7)

k_c	λ	f'_c (psi)	h_{ef} (in)	N_b (lb)
17.0	1.00	2500	4.000	6800

$\phi N_{cbg} = \phi\,(A_{Nc} / A_{Nco})\,\Psi_{ec,N}\,\Psi_{ed,N}\,\Psi_{c,N}\,\Psi_{cp,N} N_b$ (Sec. D.4.1 & Eq. D-5)

A_{Nc} (in^2)	A_{Nco} (in^2)	$c_{a,min}$ (in)	$\Psi_{ec,N}$	$\Psi_{ed,N}$	$\Psi_{c,N}$	$\Psi_{cp,N}$	N_b (lb)	ϕ	ϕN_{cbg} (lb)
240.25	144.00	7.25	1.000	1.000	1.00	1.000	6800	0.65	7374

6. Adhesive Strength of Anchor in Tension (AC308 Sec. 3.3)

$\tau_{k,cr} = \tau_{k,cr} f_{short\text{-}term} K_{sat} (f'_c / 2{,}500)^n$

$\tau_{k,cr}$ (psi)	$f_{short\text{-}term}$	K_{sat}	f'_c (psi)	n	$\tau_{k,cr}$ (psi)
1346	1.00	1.00	2500	0.24	1346

$N_{a0} = \tau_{k,cr} \pi d_a h_{ef}$ (Eq. D-16f)

$\tau_{k,cr}$ (psi)	d_a (in)	h_{ef} (in)	N_{a0} (lb)
1346	0.38	4.000	6343

$\phi N_{ag} = \phi\,(A_{Na} / A_{Na0})\,\Psi_{ed,Na}\,\Psi_{g,Na}\,\Psi_{ec,Na}\,\Psi_{p,Na} N_{a0}$ (Sec. D.4.1 & Eq. D-16b)

A_{Na} (in^2)	A_{Na0} (in^2)	$\Psi_{ed,Na}$	$\Psi_{g,Na}$	$\Psi_{ec,Na}$	$\Psi_{p,Na}$	N_{a0}(lb)	ϕ	ϕN_{ag} (lb)
161.83	85.03	1.000	1.038	1.000	1.000	6343	0.55	6892

8. Steel Strength of Anchor in Shear (Sec. D.6.1)

V_{sa} (lb)	ϕ_{grout}	ϕ	$\phi_{grout}\phi V_{sa}$ (lb)
2715	1.0	0.65	1765

9. Concrete Breakout Strength of Anchor in Shear (Sec. D.6.2)

Shear perpendicular to edge in x-direction:

$V_{bx} = 7(l_e / d_a)^{0.2}\sqrt{d_a}\lambda\sqrt{f'_c}c_{a1}^{1.5}$ (Eq. D-24)

l_e (in)	d_a (in)	λ	f'_c (psi)	c_{a1} (in)	V_{bx} (lb)
3.00	0.375	1.00	2500	13.75	16564

$\phi V_{cbgx} = \phi\,(A_{Vc} / A_{Vco})\Psi_{ec,V}\Psi_{ed,V}\Psi_{c,V}\Psi_{h,V}V_{bx}$ (Sec. D.4.1 & Eq. D-22)

A_{Vc} (in^2)	A_{Vco} (in^2)	$\Psi_{ec,V}$	$\Psi_{ed,V}$	$\Psi_{c,V}$	$\Psi_{h,V}$	V_{bx} (lb)	ϕ	ϕV_{cbgx} (lb)
647.11	850.78	1.000	0.805	1.000	1.000	16564	0.70	7103

Shear perpendicular to edge in y-direction:

$V_{by} = 7(l_e / d_a)^{0.2}\sqrt{d_a}\lambda\sqrt{f'_c}c_{a1}^{1.5}$ (Eq. D-24)

l_e (in)	d_a (in)	λ	f'_c (psi)	c_{a1} (in)	V_{by} (lb)
3.00	0.375	1.00	2500	10.75	11450

$\phi V_{cbgy} = \phi\,(A_{Vc} / A_{Vco})\Psi_{ec,V}\Psi_{ed,V}\Psi_{c,V}\Psi_{h,V}V_{by}$ (Sec. D.4.1 & Eq. D-22)

A_{Vc} (in^2)	A_{Vco} (in^2)	$\Psi_{ec,V}$	$\Psi_{ed,V}$	$\Psi_{c,V}$	$\Psi_{h,V}$	V_{by} (lb)	ϕ	ϕV_{cbgy} (lb)
387.00	520.03	1.000	0.891	1.000	1.000	11450	0.70	5313

Shear parallel to edge in x-direction:

$V_{by} = 7(l_e / d_a)^{0.2}\sqrt{d_a}\lambda\sqrt{f'_c}c_{a1}^{1.5}$ (Eq. D-24)

l_e (in)	d_a (in)	λ	f'_c (psi)	c_{a1} (in)	V_{by} (lb)
3.00	0.375	1.00	2500	7.25	6342

$\phi V_{cbgx} = \phi\,(2)(A_{Vc} / A_{Vco})\Psi_{ec,V}\Psi_{ed,V}\Psi_{c,V}\Psi_{h,V}V_{by}$ (Sec. D.4.1, D.6.2.1(c) & Eq. D-22)

A_{Vc} (in^2)	A_{Vco} (in^2)	$\Psi_{ec,V}$	$\Psi_{ed,V}$	$\Psi_{c,V}$	$\Psi_{h,V}$	V_{by} (lb)	ϕ	ϕV_{cbgx} (lb)
261.00	236.53	1.000	1.000	1.000	1.000	6342	0.70	9797

Shear parallel to edge in y-direction:

$V_{bx} = 7(l_e / d_a)^{0.2}\sqrt{d_a}\lambda\sqrt{f'_c}c_{a1}^{1.5}$ (Eq. D-24)

l_e (in)	d_a (in)	λ	f'_c (psi)	c_{a1} (in)	V_{bx} (lb)
3.00	0.375	1.00	2500	10.25	10661

$\phi V_{cbgy} = \phi\,(2)(A_{Vc} / A_{Vco})\Psi_{ec,V}\Psi_{ed,V}\Psi_{c,V}\Psi_{h,V}V_{bx}$ (Sec. D.4.1, D.6.2.1(c) & Eq. D-22)

A_{Vc} (in^2)	A_{Vco} (in^2)	$\Psi_{ec,V}$	$\Psi_{ed,V}$	$\Psi_{c,V}$	$\Psi_{h,V}$	V_{bx} (lb)	ϕ	ϕV_{cbgy} (lb)
401.67	472.78	1.000	1.000	1.000	1.000	10661	0.70	12680

10. Concrete Pryout Strength of Anchor in Shear (Sec. D.6.3)

$\phi V_{cpg} = \phi \min|k_{cp}N_{ag}\,;\, k_{cp}N_{cbg}| = \phi \min|k_{cp}(A_{Na} / A_{Na0})\Psi_{ed,Na}\Psi_{g,Na}\Psi_{ec,Na}\Psi_{p,Na}N_{a0}\,;\, k_{cp}(A_{Nc} / A_{Nco})\Psi_{ec,N}\Psi_{ed,N}\Psi_{c,N}\Psi_{cp,N}N_b|$ (Eq. D-30b)

k_{cp}	A_{Na} (in^2)	A_{Na0} (in^2)	$\Psi_{ed,Na}$	$\Psi_{g,Na}$	$\Psi_{ec,Na}$	$\Psi_{p,Na}$	N_{a0} (lb)	N_a (lb)
2.0	161.83	85.03	1.000	1.038	1.000	1.000	6343	12531

A_{Nc} (in^2)	A_{Nco} (in^2)	$\Psi_{ec,N}$	$\Psi_{ed,N}$	$\Psi_{c,N}$	$\Psi_{cp,N}$	N_b (lb)	N_{cb} (lb)	ϕ
240.25	144.00	1.000	1.000	1.000	1.000	6800	11345	0.70

ϕV_{cpg} (lb)
15883

11. Results

Interaction of Tensile and Shear Forces (Sec. RD.7)

Tension	Factored Load, N_{ua} (lb)	Design Strength, ϕN_n (lb)	Ratio	Status
Steel	1030	3394	0.30	Pass
Concrete breakout	4120	7374	0.56	Pass
Adhesive	**4120**	**6892**	**0.60**	**Pass (Governs)**

Shear	Factored Load, V_{ua} (lb)	Design Strength, ϕV_n (lb)	Ratio	Status
Steel	623	1765	0.35	Pass
T Concrete breakout x+	540	7103	0.08	Pass
T Concrete breakout y-	2434	5313	0.46	Pass
|| Concrete breakout y-	270	9797	0.03	Pass
|| Concrete breakout x-	1217	12680	0.10	Pass
Concrete breakout, combined	**-**	**-**	**0.46**	**Pass (Governs)**
Pryout	2493	15883	0.16	Pass

Interaction check	$(N_{ua}/\phi N_{ua})^{5/3}$	$(V_{ua}/\phi V_{ua})^{5/3}$	Combined Ratio	Permissible	Status
Sec. RD.7	0.42	0.28	70.3%	1.0	Pass

SET-3G w/ 3/8"Ø F1554 Gr. 36 with hef = 4.000 inch meets the selected design criteria.

12. Warnings

- Designer must exercise own judgement to determine if this design is suitable.

- Refer to manufacturer's product literature for hole cleaning and installation instructions.

Framing Analysis

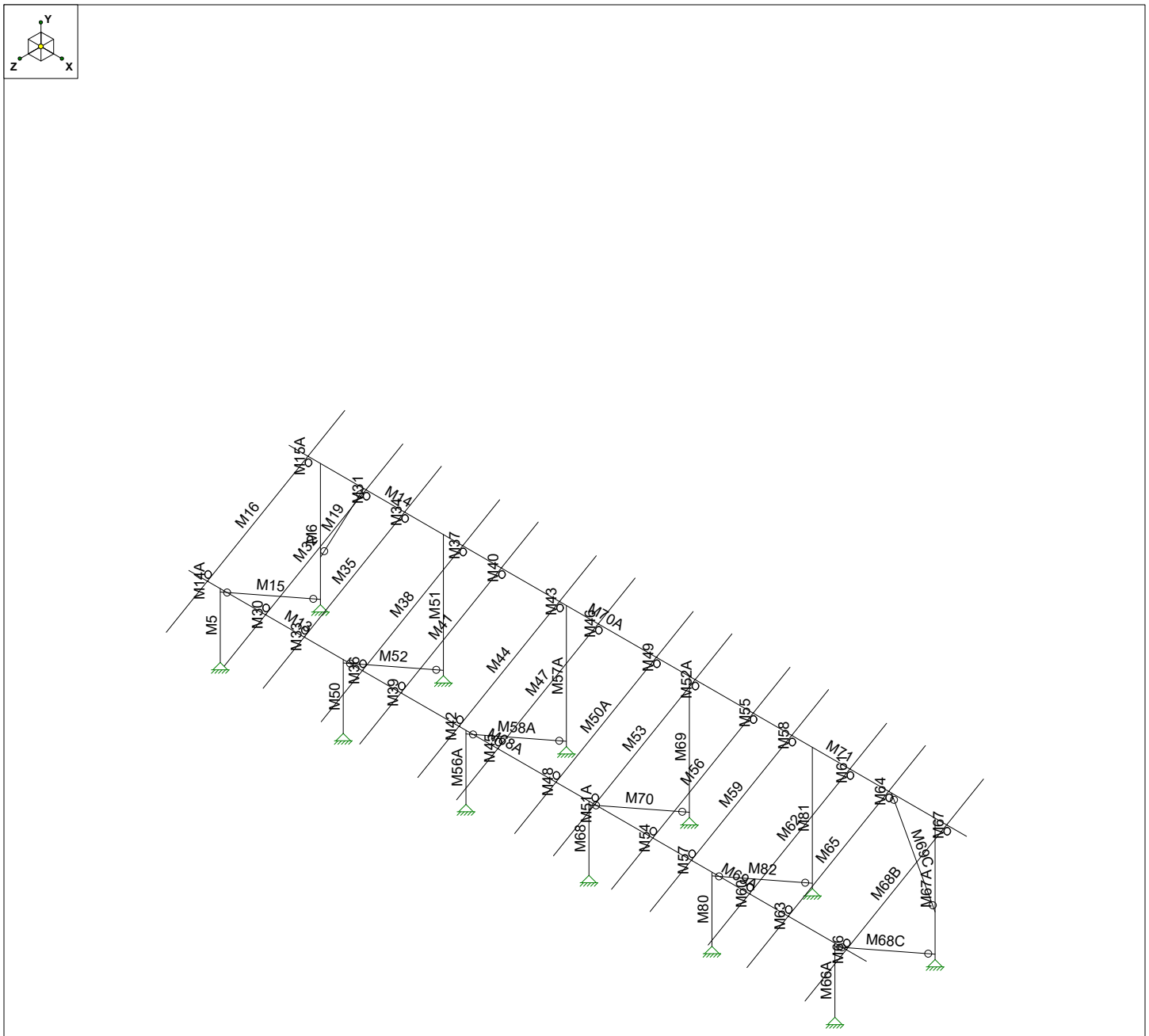

Vector Structural Engineeri...		SK - 3
STB	Ground Mount	Apr 8, 2021 at 9:57 AM
U2716.095.191		Sunmodo Sunturf B2 GM v6 85x45...

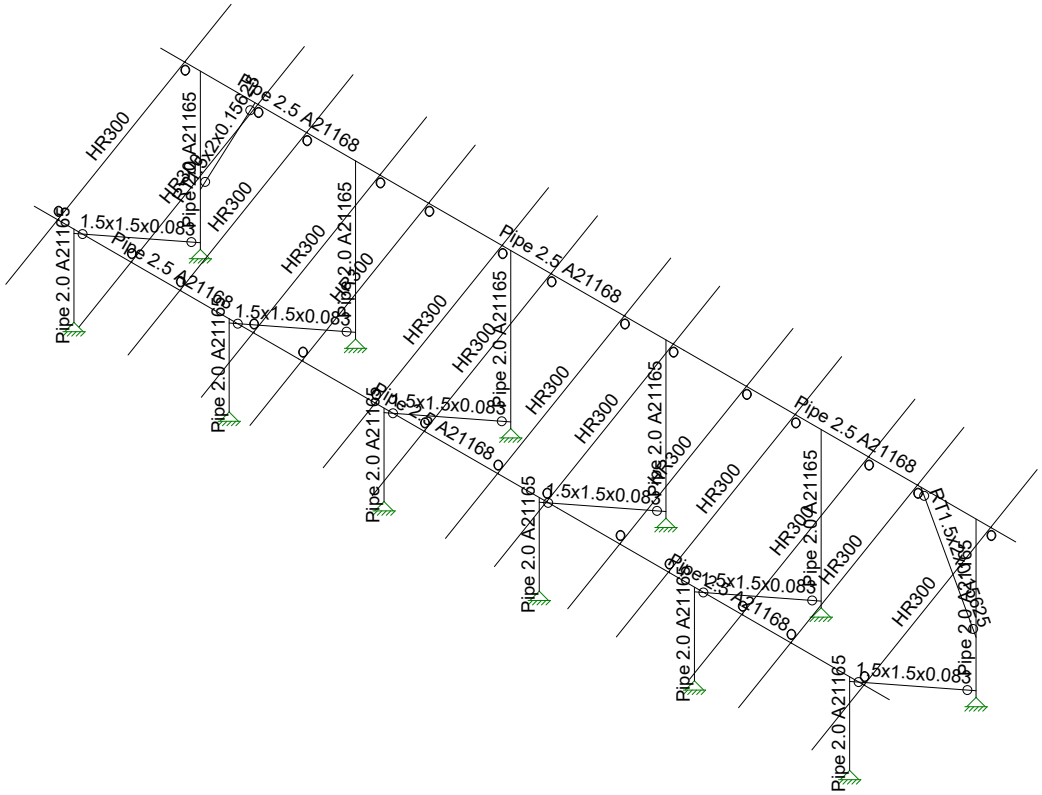

Vector Structural Engineeri...		SK - 4
STB	Ground Mount	Apr 8, 2021 at 9:57 AM
U2716.095.191		Sunmodo Sunturf B2 GM v6 85x45...

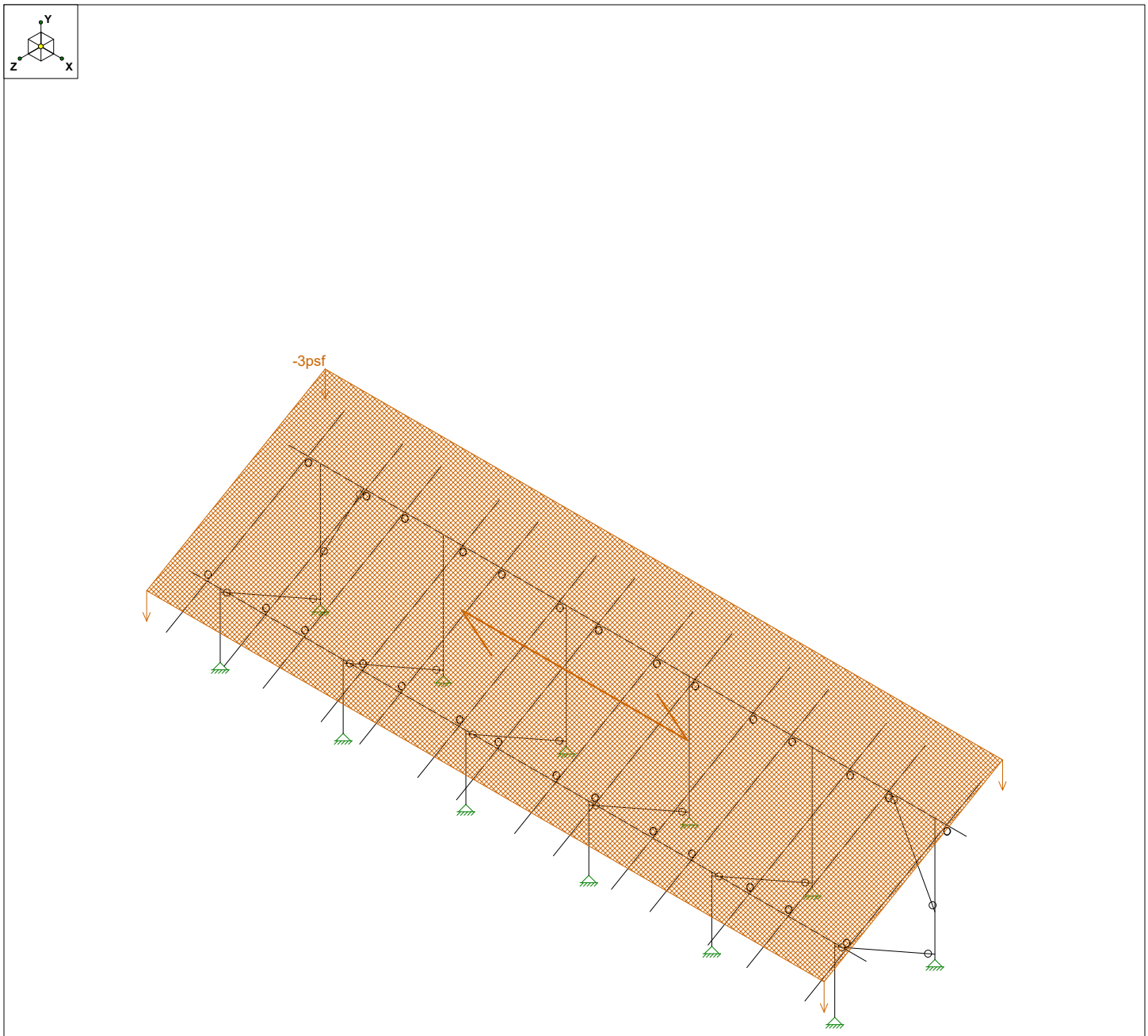

Loads: BLC 2, Solar Panel Weight

Vector Structural Engineeri...	Ground Mount	SK - 5
STB		Apr 8, 2021 at 9:57 AM
U2716.095.191		Sunmodo Sunturf B2 GM v6 85x45...

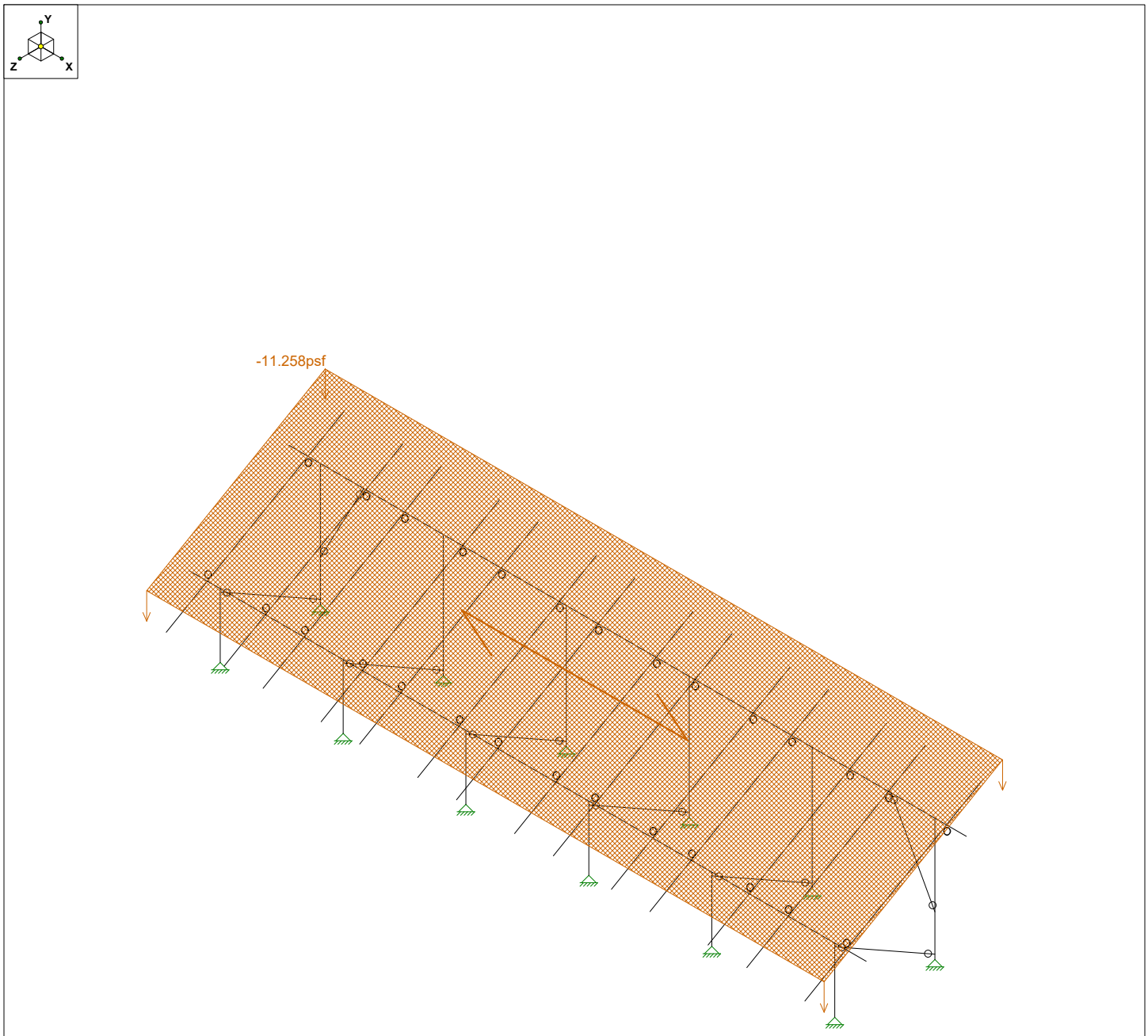

Loads: BLC 3, Roof Live/Snow

Vector Structural Engineeri...		SK - 6
STB	Ground Mount	Apr 8, 2021 at 9:57 AM
U2716.095.191		Sunmodo Sunturf B2 GM v6 85x45...

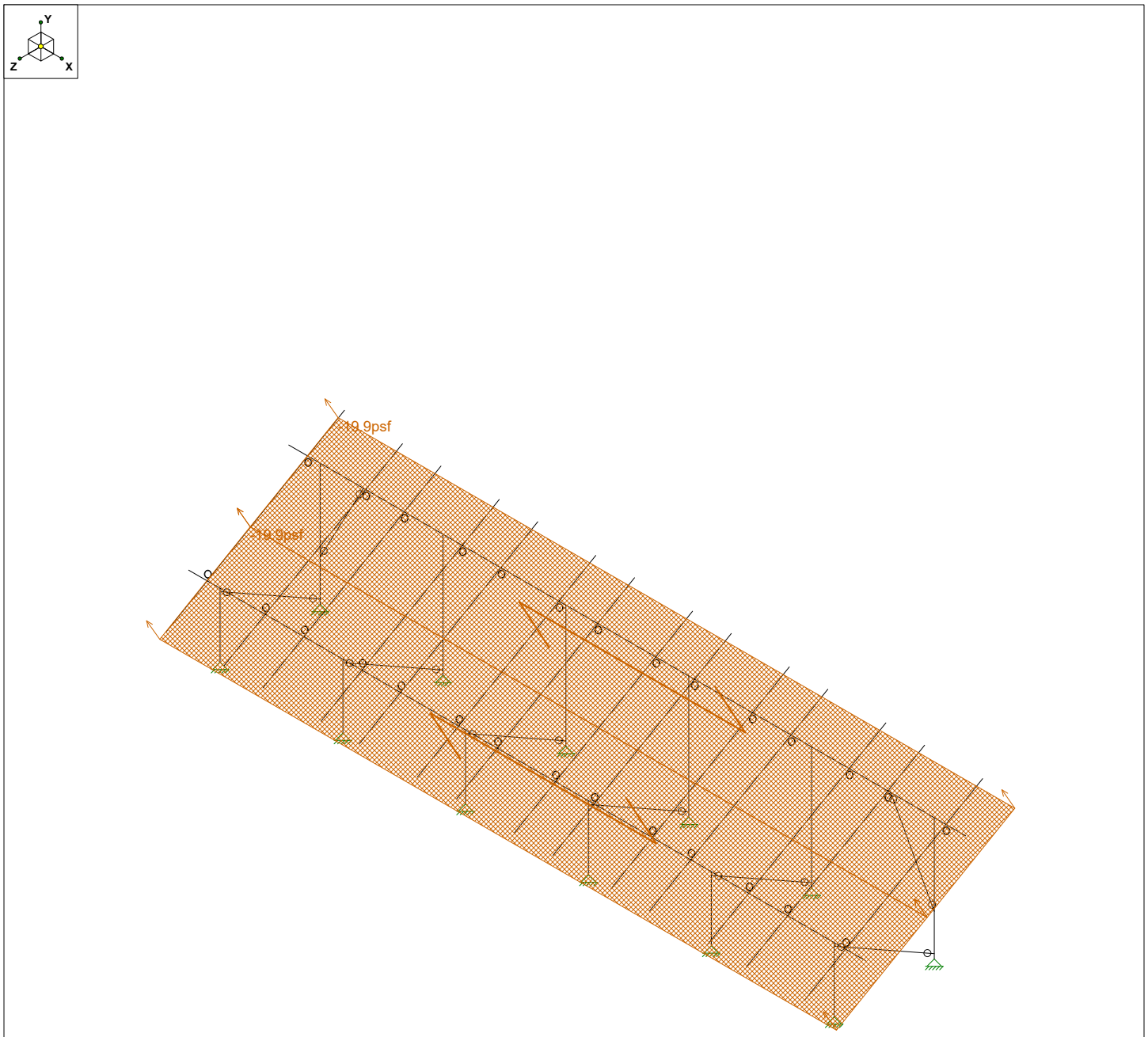

Loads: BLC 4, Wind A 0 deg

Vector Structural Engineeri...		SK - 7
STB	Ground Mount	Apr 8, 2021 at 9:58 AM
U2716.095.191		Sunmodo Sunturf B2 GM v6 85x45...

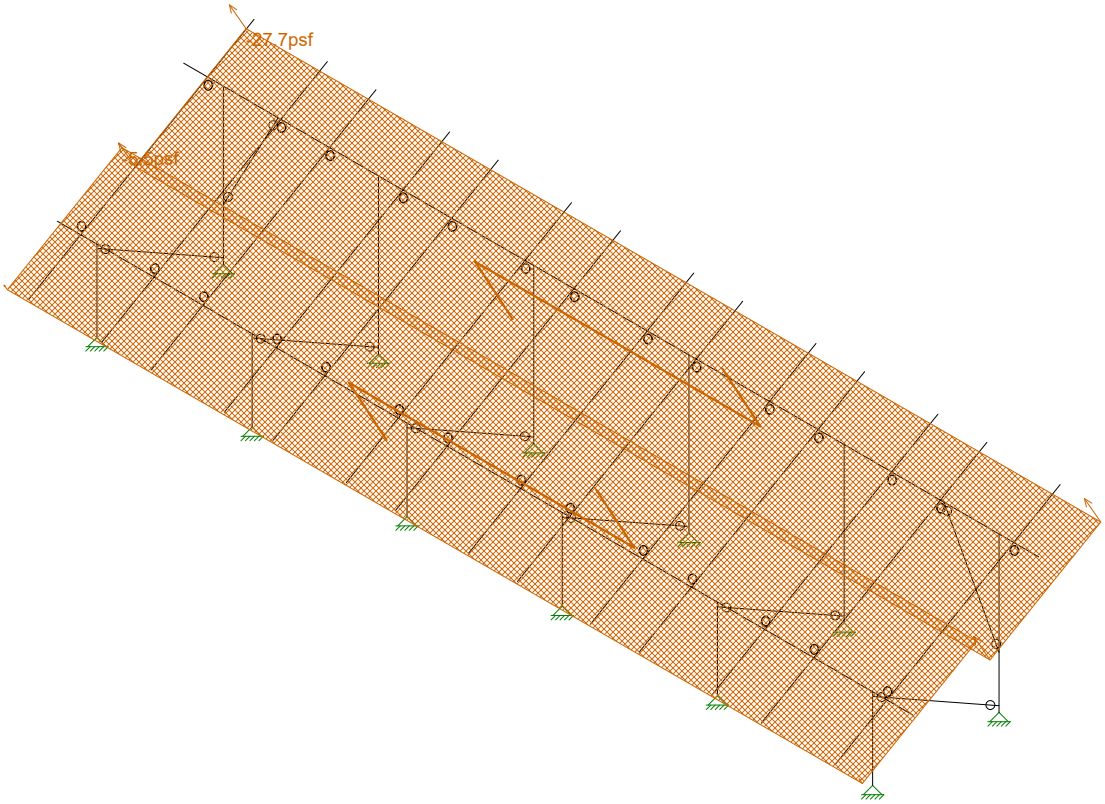

Loads: BLC 5, Wind B 0 deg

Vector Structural Engineeri...		SK - 8
STB	Ground Mount	Apr 8, 2021 at 9:58 AM
U2716.095.191		Sunmodo Sunturf B2 GM v6 85x45...

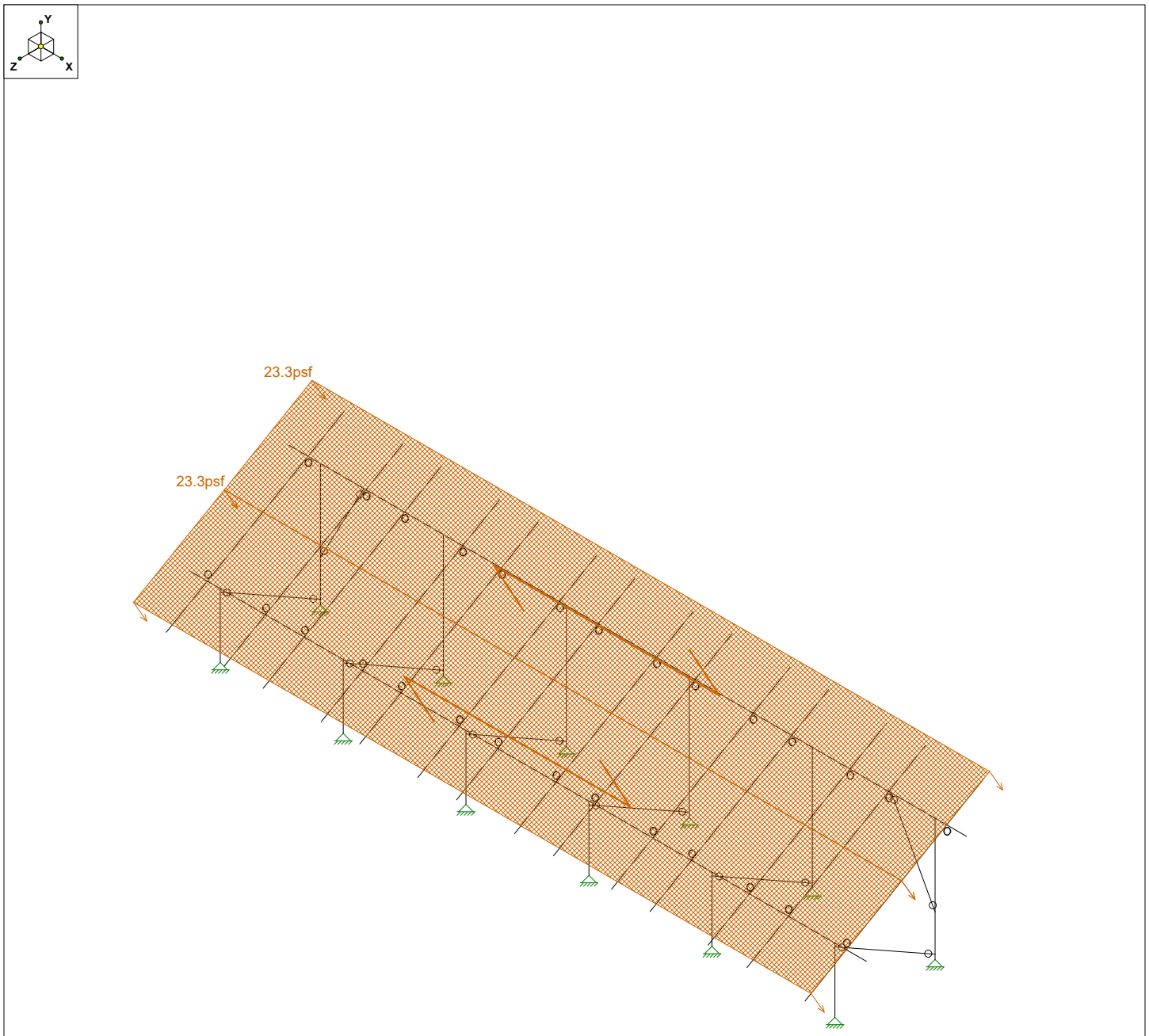

Loads: BLC 6, Wind A 180 deg

Vector Structural Engineeri...		SK - 9
STB	Ground Mount	Apr 8, 2021 at 9:58 AM
U2716.095.191		Sunmodo Sunturf B2 GM v6 85x45...

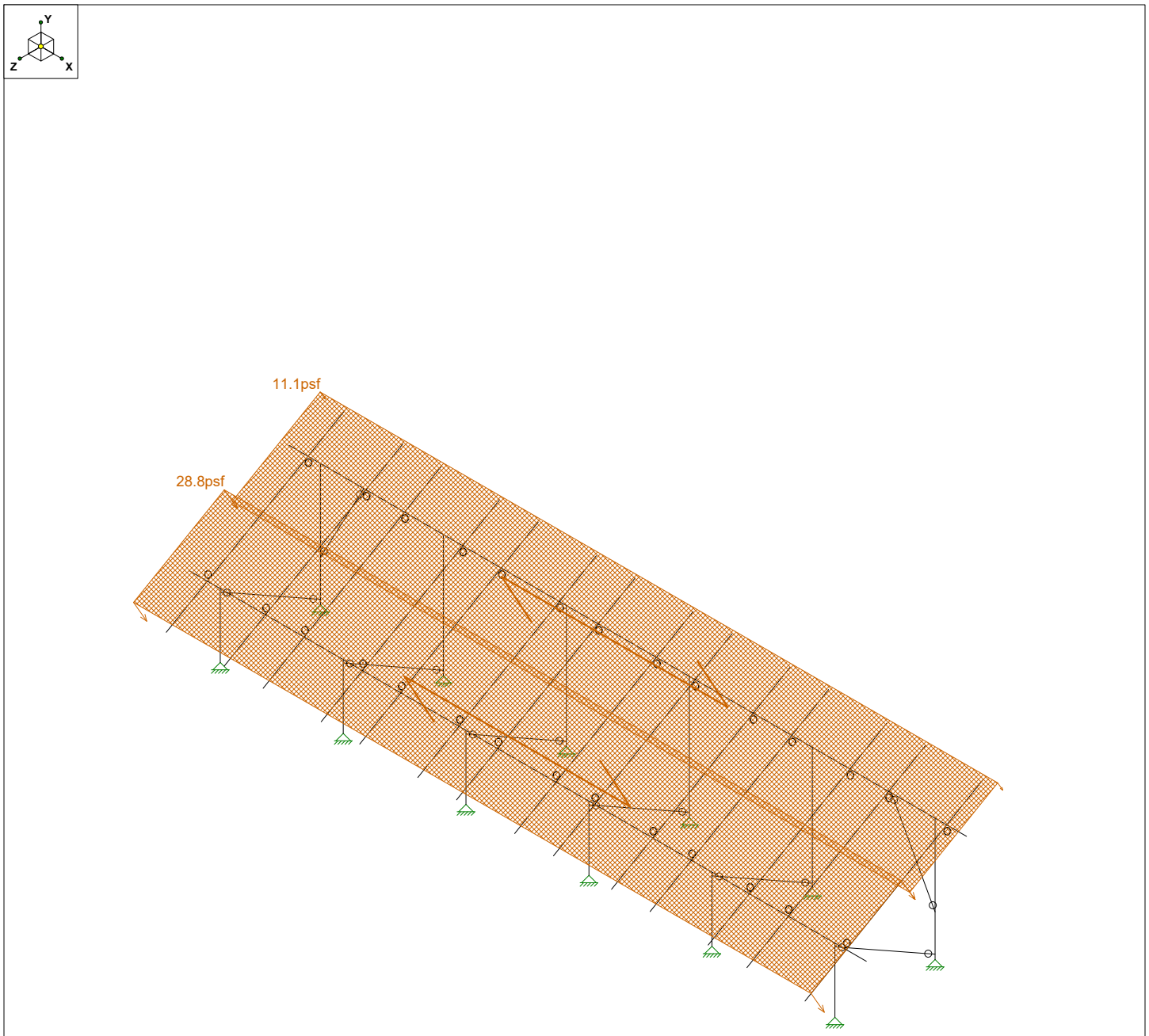

Loads: BLC 7, Wind B 180 deg

Vector Structural Engineeri...		SK - 10
STB	Ground Mount	Apr 8, 2021 at 9:58 AM
U2716.095.191		Sunmodo Sunturf B2 GM v6 85x45...

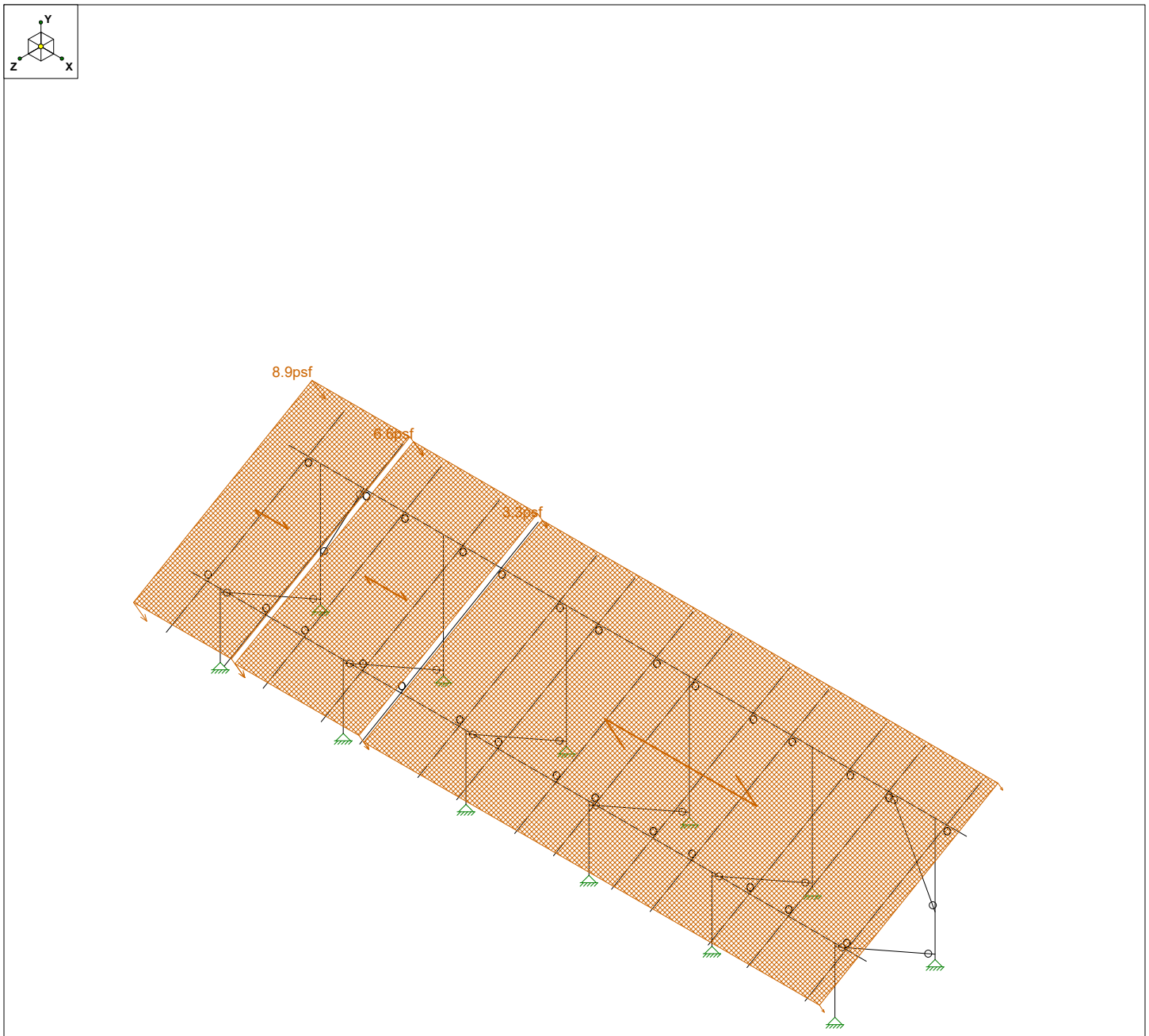

Loads: BLC 8, Wind A 90

Vector Structural Engineeri...	Ground Mount	SK - 11
STB		Apr 8, 2021 at 9:58 AM
U2716.095.191		Sunmodo Sunturf B2 GM v6 85x45...

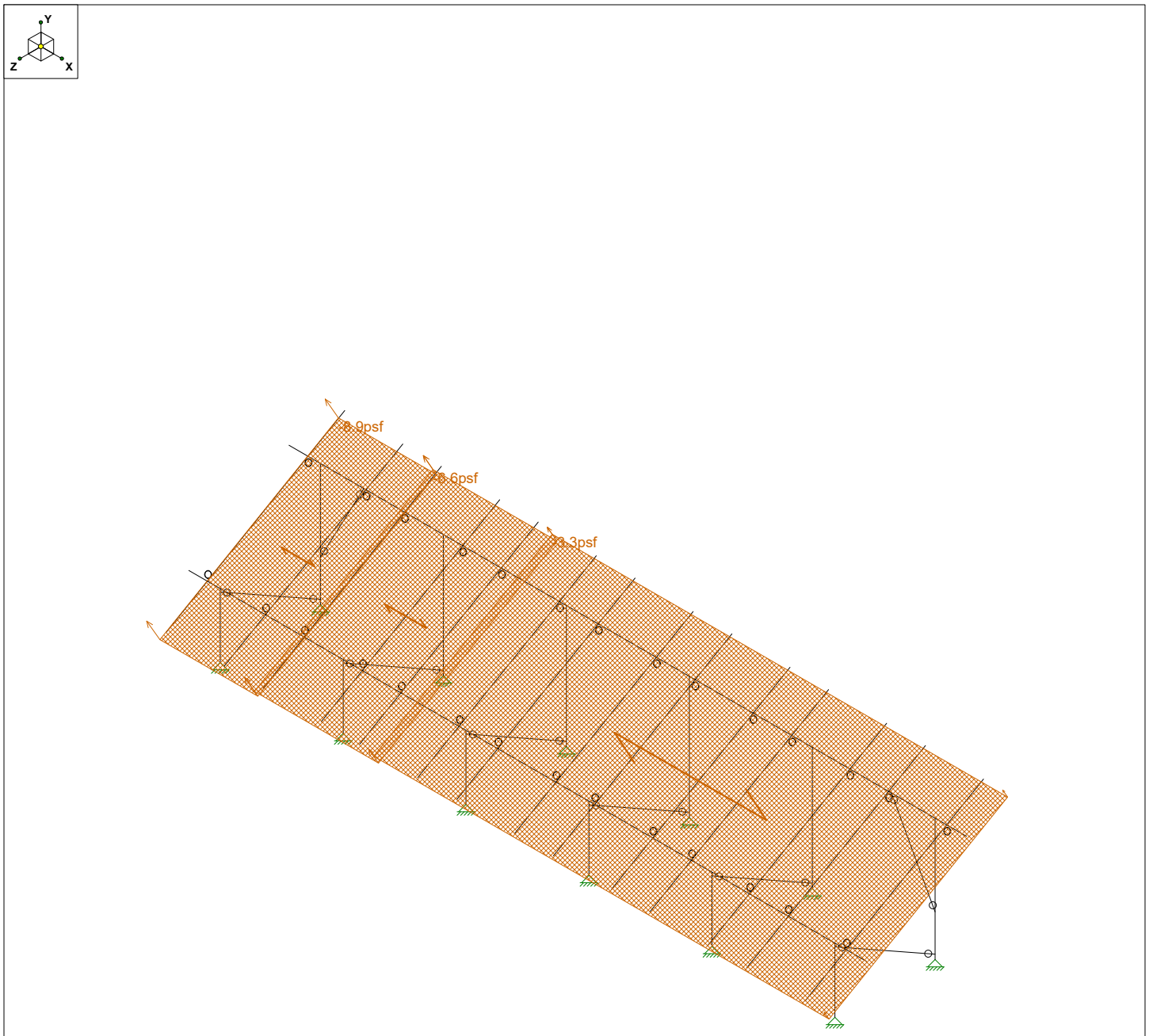

Loads: BLC 9, Wind B 90

Vector Structural Engineeri...		SK - 12
STB	Ground Mount	Apr 8, 2021 at 9:58 AM
U2716.095.191		Sunmodo Sunturf B2 GM v6 85x45...

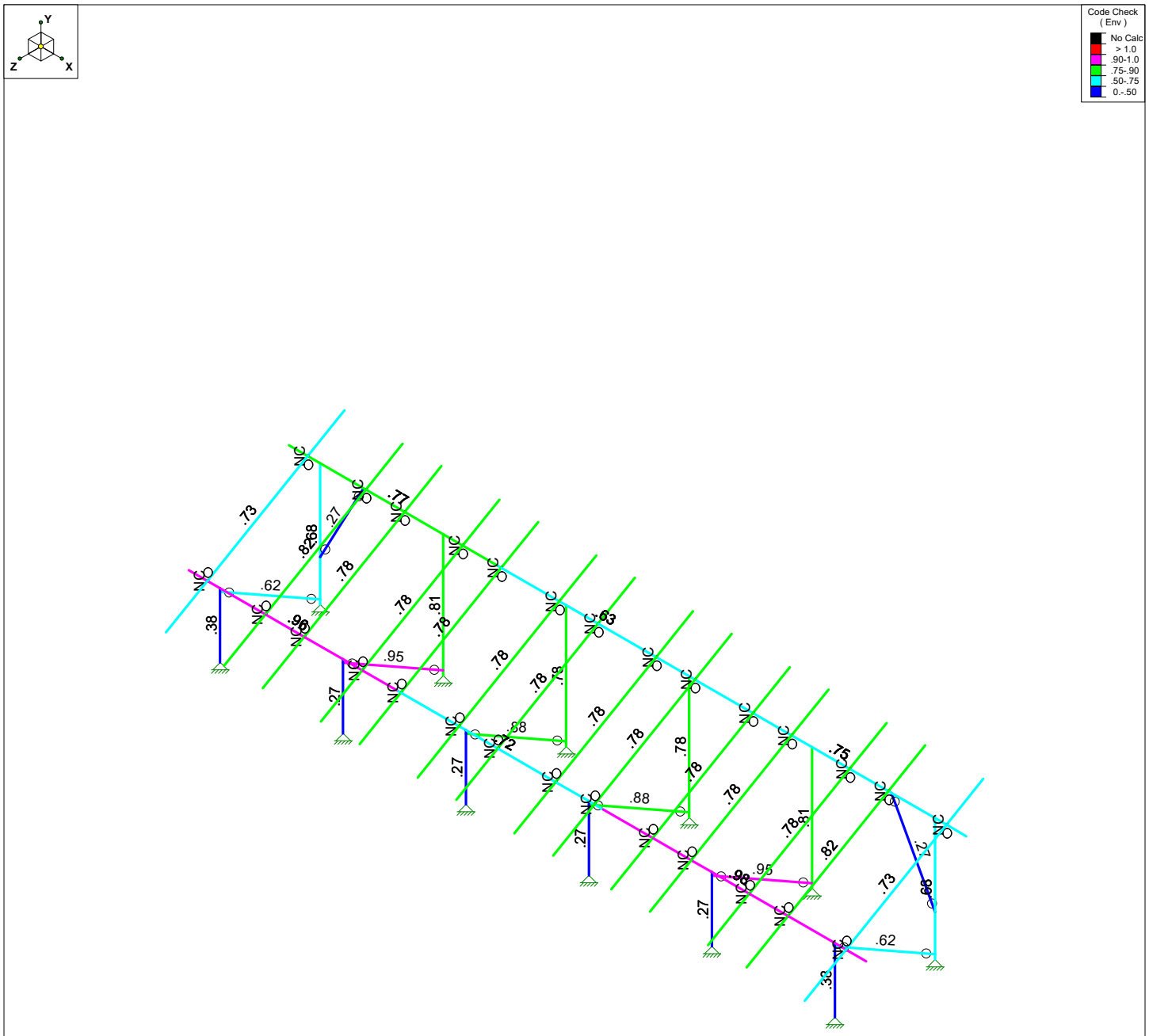

Member Code Checks Displayed (Enveloped)
Envelope Only Solution

Vector Structural Engineeri...		SK - 1
STB	Ground Mount	Apr 8, 2021 at 9:57 AM
U2716.095.191		Sunmodo Sunturf B2 GM v6 85x45...

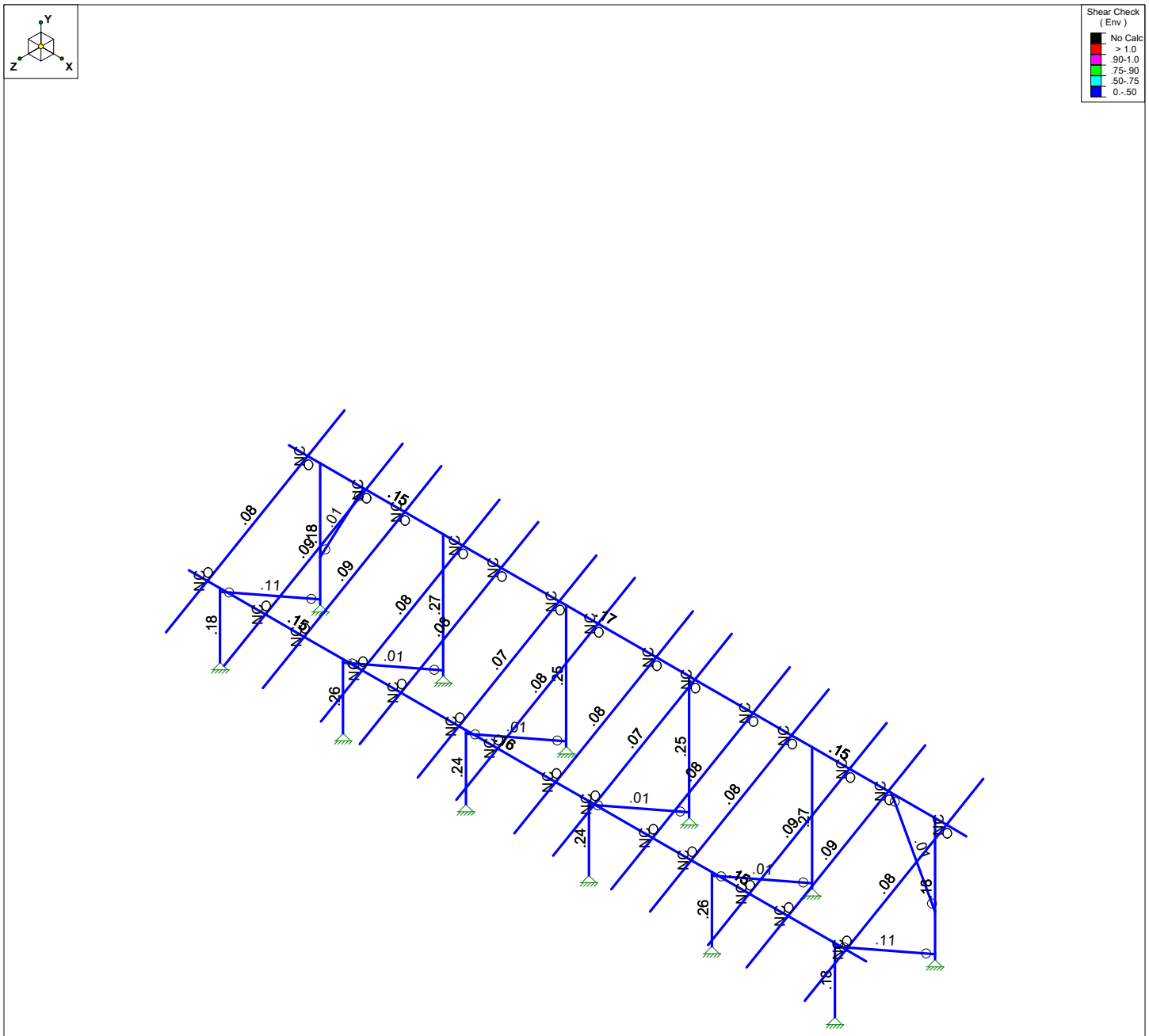

Member Shear Checks Displayed (Enveloped)
Envelope Only Solution

Vector Structural Engineeri...		SK - 2
STB	Ground Mount	Apr 8, 2021 at 9:57 AM
U2716.095.191		Sunmodo Sunturf B2 GM v6 85x45...

(Global) Model Settings

Display Sections for Member Calcs	5
Max Internal Sections for Member Calcs	97
Include Shear Deformation?	Yes
Increase Nailing Capacity for Wind?	Yes
Include Warping?	Yes
Trans Load Btwn Intersecting Wood Wall?	Yes
Area Load Mesh (in^2)	144
Merge Tolerance (in)	.12
P-Delta Analysis Tolerance	0.50%
Include P-Delta for Walls?	Yes
Automatically Iterate Stiffness for Walls?	Yes
Max Iterations for Wall Stiffness	3
Gravity Acceleration (in/sec^2)	386.4
Wall Mesh Size (in)	24
Eigensolution Convergence Tol. (1.E-)	4
Vertical Axis	Y
Global Member Orientation Plane	XZ
Static Solver	Sparse Accelerated
Dynamic Solver	Accelerated Solver

Hot Rolled Steel Code	AISC 13th(360-05): ASD
Adjust Stiffness?	Yes(Iterative)
RISAConnection Code	AISC 13th(360-05): ASD
Cold Formed Steel Code	AISI S100-07: ASD
Wood Code	AWC NDS-15: ASD
Wood Temperature	< 100F
Concrete Code	ACI 318-08
Masonry Code	ACI 530-08: ASD
Aluminum Code	AA ADM1-05: ASD - Building
Stainless Steel Code	AISC 14th(360-10): ASD
Adjust Stiffness?	Yes(Iterative)

Number of Shear Regions	4
Region Spacing Increment (in)	4
Biaxial Column Method	Exact Integration
Parme Beta Factor (PCA)	.65
Concrete Stress Block	Rectangular
Use Cracked Sections?	Yes
Use Cracked Sections Slab?	No
Bad Framing Warnings?	No
Unused Force Warnings?	Yes
Min 1 Bar Diam. Spacing?	No
Concrete Rebar Set	REBAR_SET_ASTMA615
Min % Steel for Column	1
Max % Steel for Column	8

(Global) Model Settings, Continued

Seismic Code	ASCE 7-10
Seismic Base Elevation (in)	15600
Add Base Weight?	Yes
Ct X	.02
Ct Z	.02
T X (sec)	Not Entered
T Z (sec)	Not Entered
R X	3
R Z	3
Ct Exp. X	.75
Ct Exp. Z	.75
SD1	1
SDS	1
S1	1
TL (sec)	5
Risk Cat	I or II
Drift Cat	Other
Om Z	1
Om X	1
Cd Z	4
Cd X	4
Rho Z	1
Rho X	1

Hot Rolled Steel Properties

	Label	E [ksi]	G [ksi]	Nu	Therm (/1E5 F)	Density[lb/ft^3]	Yield[psi]	Ry	Fu[psi]	Rt
1	A992	29000	11154	.3	.65	490	50000	1.1	65000	1.1
2	A36 Gr.36	29000	11154	.3	.65	490	36000	1.5	58000	1.2
3	A572 Gr.50	29000	11154	.3	.65	490	50000	1.1	65000	1.1
4	A500 Gr.B R...	29000	11154	.3	.65	527	42000	1.4	58000	1.3
5	A500 Gr.B Re...	29000	11154	.3	.65	527	46000	1.4	58000	1.3
6	A53 Gr.B	29000	11154	.3	.65	490	35000	1.6	60000	1.2
7	A1085	29000	11154	.3	.65	490	50000	1.4	65000	1.3

Aluminum Properties

	Label	E [ksi]	G [ksi]	Nu	Therm (...	Density[...	Table 3.3	kt	Ftu[psi]	Fty[psi]	Fcy[psi]	Fsu[psi]	Ct
1	3003-H14	10100	3787.5	.33	1.3	172.8	Table 3.3-3	1	19000	16000	13000	12000	141
2	6061-T6	10100	3787.5	.33	1.3	172.8	Table 3.3-4	1	38000	35000	35000	24000	141
3	6063-T5	10100	3787.5	.33	1.3	172.8	Table 3.3-4	1	22000	16000	16000	13000	141
4	6063-T6	10100	3787.5	.33	1.3	172.8	Table 3.3-4	1	30000	25000	25000	19000	141
5	5052-H34	10200	3787.5	.33	1.3	172.8	Table 3.3-3	1	34000	26000	24000	20000	141
6	6061-T6 W	10100	3787.5	.33	1.3	172.8	Table 3.3-3	1	24000	15000	15000	15000	141
7	6005-T5	10100	3787.5	.33	1.3	172.8	Table 3.3-3	1	38000	35000	35000	24000	141

Hot Rolled Steel Section Sets

	Label	Shape	Type	Design List	Material	Design R...	A [in2]	Iyy [in4]	Izz [in4]	J [in4]
1	Post	Pipe 2.0 A21165	Column	Pipe	A572 Gr.50	Typical	.776	.499	.499	.998
2	Cross Beam	Pipe 2.5 A21168	Beam	Wide Flange	A572 Gr.50	Typical	.947	.907	.907	1.814
3	Diagonal Brace	1.5x1.5x0.083	HBrace	SquareTube	A36 Gr.36	Typical	.47	.158	.158	.236

Aluminum Section Sets

	Label	Shape	Type	Design List	Material	Design R...	A [in2]	Iyy [in4]	Izz [in4]	J [in4]
1	AL Posts	2.375ODX0.188	Column	Pipe	6005-T5	Typical	1.29	.778	.778	1.54
2	AL Brace	RT1.5x2x0.15625	VBrace	Rectangular Tubes	6005-T5	Typical	.996	.327	.524	.602
3	AL Rails	HR300	Beam	Rectangular Tubes	6005-T5	Typical	.74	.253	.727	.578
4	AL Cross Beam	Cross Rail	Beam	Rectangular Tubes	6005-T5	Typical	1.909	1.97	4.366	4.017

Member Area Loads (BLC 2 : Solar Panel Weight)

	Joint A	Joint B	Joint C	Joint D	Direction	Distribution	Magnitude[psf]
1	N197	N200	N199	N196	Y	A-B	-3

Member Area Loads (BLC 3 : Roof Live/Snow)

	Joint A	Joint B	Joint C	Joint D	Direction	Distribution	Magnitude[psf]
1	N197	N200	N199	N196	PY	A-B	-13

Member Area Loads (BLC 4 : Wind A 0 deg)

	Joint A	Joint B	Joint C	Joint D	Direction	Distribution	Magnitude[psf]
1	N197	N200	N201	N198	Perp	A-B	-19.9
2	N198	N201	N199	N196	Perp	A-B	-19.9

Member Area Loads (BLC 5 : Wind B 0 deg)

	Joint A	Joint B	Joint C	Joint D	Direction	Distribution	Magnitude[psf]
1	N197	N200	N201	N198	Perp	A-B	-27.7
2	N198	N201	N199	N196	Perp	A-B	-5.5

Member Area Loads (BLC 6 : Wind A 180 deg)

	Joint A	Joint B	Joint C	Joint D	Direction	Distribution	Magnitude[psf]
1	N197	N200	N201	N198	Perp	A-B	23.3
2	N198	N201	N199	N196	Perp	A-B	23.3

Member Area Loads (BLC 7 : Wind B 180 deg)

	Joint A	Joint B	Joint C	Joint D	Direction	Distribution	Magnitude[psf]
1	N197	N200	N201	N198	Perp	A-B	11.1
2	N198	N201	N199	N196	Perp	A-B	28.8

Member Area Loads (BLC 8 : Wind A 90)

	Joint A	Joint B	Joint C	Joint D	Direction	Distribution	Magnitude[psf]
1	N197	N203	N202	N196	Perp	A-B	8.9
2	N203	N209	N208	N202	Perp	A-B	6.6
3	N209	N200	N199	N208	Perp	A-B	3.3

Member Area Loads (BLC 9 : Wind B 90)

	Joint A	Joint B	Joint C	Joint D	Direction	Distribution	Magnitude[psf]
1	N197	N203	N202	N196	Perp	A-B	-8.9
2	N203	N209	N208	N202	Perp	A-B	-6.6
3	N209	N200	N199	N208	Perp	A-B	-3.3

Basic Load Cases

	BLC Description	Category	X Gravity	Y Gravity	Z Gravity	Joint	Point	Distributed	Area(M...	Surface...
1	Self Weight	DL		-1.05						
2	Solar Panel Weight	DL							1	

Basic Load Cases (Continued)

	BLC Description	Category	X Gravity	Y Gravity	Z Gravity	Joint	Point	Distributed	Area(M...	Surface...
3	Roof Live/Snow	RLL							1	
4	Wind A 0 deg	OL1							2	
5	Wind B 0 deg	OL2							2	
6	Wind A 180 deg	OL3							2	
7	Wind B 180 deg	OL4							2	
8	Wind A 90	OL5							3	
9	Wind B 90	OL6							3	
10	BLC 2 Transient Area ...	None						38		
11	BLC 3 Transient Area ...	None						38		
12	BLC 4 Transient Area ...	None						120		
13	BLC 5 Transient Area ...	None						120		
14	BLC 6 Transient Area ...	None						120		
15	BLC 7 Transient Area ...	None						120		
16	BLC 8 Transient Area ...	None						114		
17	BLC 9 Transient Area ...	None						114		

Load Combinations

	Description	S...	PD...	SRSS	BLC	Fa...	BLC	Fa...	BLC	Fa...	B...	Fa...	B...	Fa...	B...	Fa...	B...	Fa...	B...	Fa...	B...	Fa...	B...	Fa...
1	1.0 D	Yes	Y		DL	1																		
2	1.0 D + 1.0 S	Yes	Y		DL	1	RLL	1																
3	1.0 D + 0.6 W1	Yes	Y		DL	1	RLL		OL1	1														
4	1.0 D + 0.6 W2	Yes	Y		DL	1	RLL		OL2	1														
5	1.0 D + 0.6 W3	Yes	Y		DL	1	RLL		OL3	1														
6	1.0 D + 0.6 W4	Yes	Y		DL	1	RLL		OL4	1														
7	1.0 D + 0.6 W5	Yes	Y		DL	1	RLL		OL5	1														
8	1.0 D + 0.6 W6	Yes	Y		DL	1	RLL		OL6	1														
9	1.0 D + 0.45 W1 + 0....	Yes	Y		DL	1	RLL	.75	OL1	.75														
10	1.0 D + 0.45 W2 + 0....	Yes	Y		DL	1	RLL	.75	OL2	.75														
11	1.0 D + 0.45 W3 + 0....	Yes	Y		DL	1	RLL	.75	OL3	.75														
12	1.0 D + 0.45 W4 + 0....	Yes	Y		DL	1	RLL	.75	OL4	.75														
13	1.0 D + 0.45 W5 + 0....	Yes	Y		DL	1	RLL	.75	OL5	.75														
14	1.0 D + 0.45 W6 + 0....	Yes	Y		DL	1	RLL	.75	OL6	.75														
15	0.6 D + 0.6 W1	Yes	Y		DL	.6	RLL		OL1	1														
16	0.6 D + 0.6 W2	Yes	Y		DL	.6	RLL		OL2	1														
17	0.6 D + 0.6 W3	Yes	Y		DL	.6	RLL		OL3	1														
18	0.6 D + 0.6 W4	Yes	Y		DL	.6	RLL		OL4	1														
19	0.6 D + 0.6 W5	Yes	Y		DL	.6	RLL		OL5	1														
20	0.6 D + 0.6 W6	Yes	Y		DL	.6	RLL		OL6	1														

Envelope Joint Reactions

	Joint		X [lb]	LC	Y [lb]	LC	Z [lb]	LC	MX [lb-ft]	LC	MY [lb...	LC	MZ [lb-ft]	LC
1	N2	max	92.198	12	1019.68	10	53.849	3	0	20	0	20	0	20
2		min	-44.998	15	87.272	15	-64.627	5	0	1	0	1	0	1
3	N1	max	180.044	11	2280.498	5	1153.1...	5	0	20	0	20	0	20
4		min	-161.6...	16	-1916.417	16	-982.9...	3	0	1	0	1	0	1
5	N132	max	7.523	16	3043.948	5	1783.3...	5	0	20	0	20	0	20
6		min	-6.818	5	-2513.772	16	-1521....	3	0	1	0	1	0	1
7	N133	max	15.857	6	1570.429	10	68.457	3	0	20	0	20	0	20
8		min	-9.135	15	129.494	17	-82.1	5	0	1	0	1	0	1
9	N109	max	6.832	5	3043.686	5	1783.4...	5	0	20	0	20	0	20
10		min	-7.65	16	-2513.844	16	-1521....	3	0	1	0	1	0	1
11	N110A	max	9.136	15	1570.491	10	68.459	3	0	20	0	20	0	20
12		min	-15.812	6	129.578	17	-82.103	5	0	1	0	1	0	1
13	N121	max	4.025	20	3038.408	5	1650.11	5	0	20	0	20	0	20

Envelope Joint Reactions (Continued)

	Joint		X [lb]	LC	Y [lb]	LC	Z [lb]	LC	MX [lb-ft]	LC	MY [lb...	LC	MZ [lb-ft]	LC
14		min	-3.447	19	-2562.62	16	-1408....	3	0	1	0	1	0	1
15	N122	max	9.001	5	1470.475	10	69.206	3	0	20	0	20	0	20
16		min	-6.438	15	142.36	17	-82.927	5	0	1	0	1	0	1
17	N133B	max	1.655	17	3038.233	5	1650.0...	5	0	20	0	20	0	20
18		min	-1.974	16	-2562.619	16	-1408....	3	0	1	0	1	0	1
19	N134B	max	6.443	15	1470.444	10	69.206	3	0	20	0	20	0	20
20		min	-8.94	5	142.369	17	-82.925	5	0	1	0	1	0	1
21	N137C	max	161.851	16	2280.218	5	1152.9...	5	0	20	0	20	0	20
22		min	-180.1...	11	-1916.395	16	-982.8...	3	0	1	0	1	0	1
23	N138B	max	45.041	15	1019.585	10	53.844	3	0	20	0	20	0	20
24		min	-92.22	12	87.23	15	-64.621	5	0	1	0	1	0	1
25	Totals:	max	.024	7	20741.705	11	8713.7...	5						
26		min	-.022	8	-11027.734	15	-7442....	15						

Envelope AISC 13th(360-05): ASD Steel Code Checks

	Member	Shape	Code Check	Loc[in]	LC	Shear ...	Loc[in]	Dir	LC	Pnc/om [...	Pnt/om [lb]	Mnyy/om...	Mnzz/om...	Cb	Eqn
1	M5	Pipe 2.0 A2...	.381	53.987	12	.179	53.987		5	16197.475	23232.186	1397.505	1397.505	1....	H1-1b
2	M6	Pipe 2.0 A2...	.677	35.818	11	.178	0		5	6498.45	23232.186	1397.505	1397.505	1....	H1-1a
3	M13	Pipe 2.5 A2...	.957	134....	12	.155	136....		6	11641.036	28358.413	2081.747	2081.747	1....	H1-1b
4	M14	Pipe 2.5 A2...	.770	136....	11	.153	136....		11	11641.036	28358.413	2081.747	2081.747	1....	H1-1b
5	M15	1.5x1.5x0.083	.620	51.581	5	.110	101....	y	11	2325.049	10141.308	449.583	449.583	1....	H1-1a
6	M80	Pipe 2.0 A2...	.271	53.987	5	.259	53.987		5	16197.475	23232.186	1397.505	1397.505	1....	H1-1b
7	M81	Pipe 2.0 A2...	.808	3.358	5	.274	0		5	6498.45	23232.186	1397.505	1397.505	1....	H1-1a
8	M82	1.5x1.5x0.083	.946	51.581	5	.009	101....	y	13	2325.049	10141.308	449.583	449.583	1....	H1-1a
9	M50	Pipe 2.0 A2...	.271	53.987	5	.259	53.987		5	16197.475	23232.186	1397.505	1397.505	1....	H1-1b
10	M51	Pipe 2.0 A2...	.808	3.358	5	.274	0		5	6498.45	23232.186	1397.505	1397.505	1....	H1-1a
11	M52	1.5x1.5x0.083	.946	51.581	5	.011	0	y	14	2325.049	10141.308	449.583	449.583	1....	H1-1a
12	M56A	Pipe 2.0 A2...	.272	53.987	5	.238	53.987		5	16197.475	23232.186	1397.505	1397.505	1....	H1-1b
13	M57A	Pipe 2.0 A2...	.781	3.358	5	.253	0		5	6498.45	23232.186	1397.505	1397.505	1....	H1-1a
14	M58A	1.5x1.5x0.083	.876	51.581	5	.009	101....	y	7	2325.049	10141.308	449.583	449.583	1....	H1-1a
15	M68	Pipe 2.0 A2...	.272	53.987	5	.238	53.987		5	16197.475	23232.186	1397.505	1397.505	1....	H1-1b
16	M69	Pipe 2.0 A2...	.781	3.358	5	.253	0		5	6498.45	23232.186	1397.505	1397.505	1....	H1-1a
17	M70	1.5x1.5x0.083	.876	51.581	5	.007	0	y	7	2325.049	10141.308	449.583	449.583	1....	H1-1a
18	M68A	Pipe 2.5 A2...	.715	60	12	.159	58.125		6	11641.036	28358.413	2081.747	2081.747	1....	H1-1b
19	M69A	Pipe 2.5 A2...	.982	96.25	12	.155	93.844		6	11641.036	28358.413	2081.747	2081.747	2....	H1-1b
20	M70A	Pipe 2.5 A2...	.635	60	11	.170	58.125		11	11641.036	28358.413	2081.747	2081.747	2....	H1-1b
21	M71	Pipe 2.5 A2...	.747	96.25	11	.153	93.844		11	11641.036	28358.413	2081.747	2081.747	2....	H1-1b
22	M66A	Pipe 2.0 A2...	.381	53.987	12	.179	53.987		5	16197.475	23232.186	1397.505	1397.505	1....	H1-1b
23	M67A	Pipe 2.0 A2...	.677	35.818	11	.178	0		5	6498.45	23232.186	1397.505	1397.505	1....	H1-1a
24	M68C	1.5x1.5x0.083	.620	51.581	5	.110	101....	y	11	2325.049	10141.308	449.583	449.583	1....	H1-1a

Envelope AA ADM1-05: ASD - Building Aluminum Code Checks

	Member	Shape	Code ...	Loc[in]	LC	Shear ...	Loc[in]	Dir	LC	Fc [psi]	Ft [psi]	Fb y-y ...	Fb z-z ...	Fs y-y ...	Fs z-z ...	Cb	Cmy	Cmz	Eqn
1	M19	RT1.5x2...	.272	51.381	11	.009	80.862	y	12	2566.6...	19487....	21212....	21075....	12246....	12246....	1....	.6	.6	4.1.1-1
2	M16	HR300	.731	41.486	12	.081	43.372	y	12	8433.0...	19487....	19487....	19487....	12246....	12246....	2....	.6	.6	4.1.2-1
3	M69C	RT1.5x2...	.272	51.456	11	.009	0	y	12	2559.1...	19487....	21212....	21072....	12246....	12246....	1....	.6	.6	4.1.1-1
4	M32	HR300	.820	41.486	6	.086	43.372	y	12	8433.0...	19487....	19487....	19487....	12246....	12246....	2....	.6	.6	4.1.2-1
5	M35	HR300	.780	41.486	12	.091	43.372	y	12	8433.0...	19487....	19487....	19487....	12246....	12246....	2....	.6	.6	4.1.2-1
6	M38	HR300	.780	41.486	12	.077	43.372	y	12	8433.0...	19487....	19487....	19487....	12246....	12246....	2....	.6	.6	4.1.2-1
7	M41	HR300	.779	41.486	12	.075	43.372	y	12	8433.0...	19487....	19487....	19487....	12246....	12246....	2....	.6	.6	4.1.2-1
8	M44	HR300	.780	41.486	12	.073	43.372	y	12	8433.0...	19487....	19487....	19487....	12246....	12246....	2....	.6	.6	4.1.2-1
9	M47	HR300	.780	41.486	12	.081	43.372	y	12	8433.0...	19487....	19487....	19487....	12246....	12246....	2....	.6	.6	4.1.2-1
10	M50A	HR300	.780	41.486	12	.081	43.372	y	12	8433.0...	19487....	19487....	19487....	12246....	12246....	2....	.6	.6	4.1.2-1
11	M53	HR300	.780	41.486	12	.073	43.372	y	12	8433.0...	19487....	19487....	19487....	12246....	12246....	2....	.6	.6	4.1.2-1

Envelope AA ADM1-05: ASD - Building Aluminum Code Checks (Continued)

	Member	Shape	Code ...	Loc[in]	LC	Shear ...	Loc[in]	Dir	LC	Fc [psi]	Ft [psi]	Fb y-y ...	Fb z-z ...	Fs y-y ...	Fs z-z ...	Cb	Cmy	Cmz	Eqn
12	M56	HR300	.779	41.486	12	.075	43.372	y	12	8433.0...	19487....	19487....	19487....	12246....	12246....	2....	.6	.6	4.1.2-1
13	M59	HR300	.780	41.486	12	.077	43.372	y	12	8433.0...	19487....	19487....	19487....	12246....	12246....	2....	.6	.6	4.1.2-1
14	M62	HR300	.780	41.486	12	.091	43.372	y	12	8433.0...	19487....	19487....	19487....	12246....	12246....	2....	.6	.6	4.1.2-1
15	M65	HR300	.820	41.486	6	.086	43.372	y	12	8433.0...	19487....	19487....	19487....	12246....	12246....	2....	.6	.6	4.1.2-1
16	M68B	HR300	.731	41.486	12	.081	43.372	y	12	8433.0...	19487....	19487....	19487....	12246....	12246....	2....	.6	.6	4.1.2-1

REVISIONS			
REV	DESCRIPTION	BY	DATE
A	INITIAL RELEASE	LWF	10/20/2016

NOTES: UNLESS OTHERWISE SPECIFIED

1. DIMENSIONS SHOWN ARE INCHES [MILIMETERS].

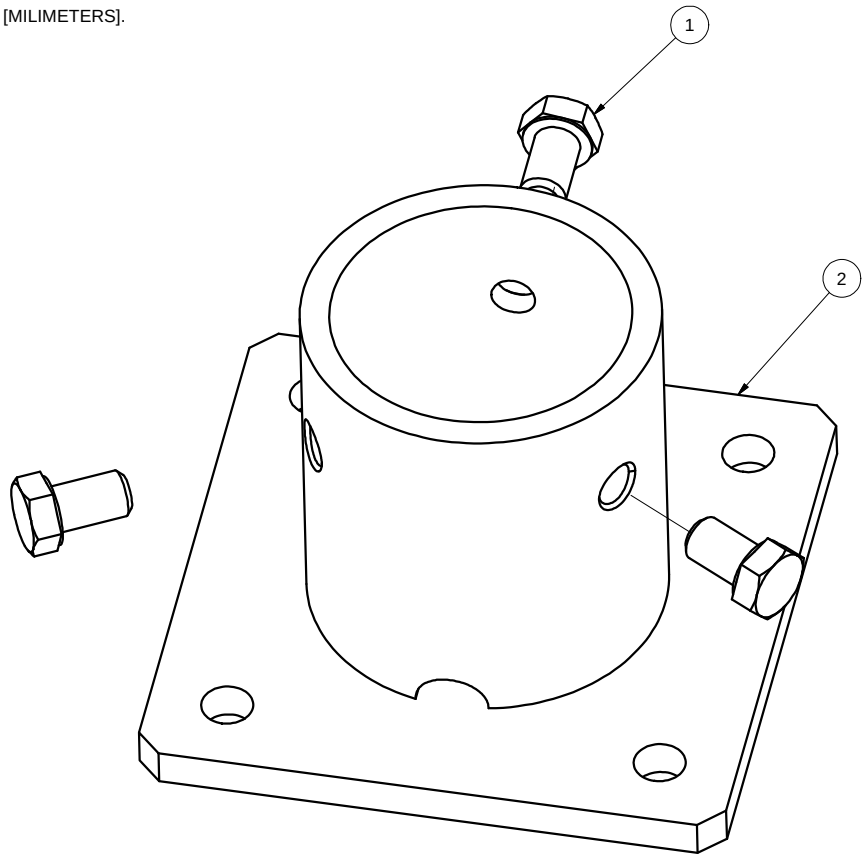

ITEM	PART NUMBER	DESCRIPTION	QTY
2	A21120-001	2" PIPE BASE	1
1	B15018-011	HEX CAP SCREW 3/8-16 X 5/8	3

MATERIAL: SEE NOTES

Third Angle Projection:

GENERAL SPECIFICATIONS
All Dimensions in inches [millimeters]
Tolerances
X.XXX ±0.01 [0.25mm]
X.XX ±0.02 [0.50mm]
X.X ±0.039 [1.0mm]
Unless otherwise spec'd

Break all sharp edges .010-.020 unless otherwise specified.

DRAWN BY: LWF
DATE: 10/20/2016
CHECKED BY:
APPROVALS:

Sunmodo Corp.

1905 E 5TH STREET, STE A, VANCOUVER, WA 98661

TITLE: 2" PIPE BASE KIT

B — DRAWING NUMBER: K10268-001

SCALE: NONE — SHEET 1 of 1

NOTES: UNLESS OTHERWISE SPECIFIED

1. DIMENSIONS SHOWN ARE INCHES [MILIMETERS].
2. MATERAIL: ALUMINUM 6005-T5.
   FINISH: CLEAR ANODIZED 10 µm THICK.
3. THE UNSPECIFIED DIMENSIONS ARE SPECIFIED BY 2D CAD FILE.

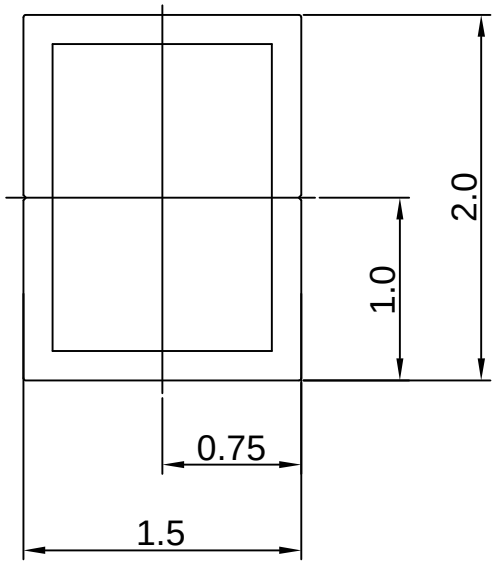

Section properties:

Weight: 1.156 lbs/ft
Area: 0.992 in^2
Perimeter: 12.601 in
Bounding Box: X: -1.000,1.000
Y: -0.750, 0.750
Centroid:(0.000,0.000)
Moments of Inertia(in^4): Ix=0.506,Iy=0.322
Section modulus in bending(in^3): Wx=0.675,Wy=0.322
Radii of Gyration: X: 0.714, Y: 0.570

MATERIAL SEE NOTES		**Sunmodo Corp.**
Third Angle Projection:		1905 E 5TH STREET, SUITE A, VANCOUVER, WA 98661
GENERAL SPECIFICATIONS All Dimensions in inches [millimeters] Tolerances X.XXX ± 0.01 [0.25mm] X.XX ± 0.02 [0.50mm] X.X ± 0.039 [1.0mm] Unless otherwise spec'd	Break all sharp edges .010-.020 unless otherwise specified.	TITLE 1.5X2 AL TUBE BRACE EXTRUSION
DRAWN BY zcg	DATE 03/12/2014	B — DRAWING NUMBER A20164
CHECKED BY		
APPROVALS		SCALE: NONE — SHEET 1 of 1

REVISIONS			
REV	DESCRIPTON	BY	DATE
A	ADDED BOTTOM CHANNEL & CHANGED ONE 3/8 CHANNEL TO 1/4	zcg	02/21/2013

NOTES: UNLESS OTHERWISE SPECIFIED

1. DIMENSIONS SHOWN ARE INCHES [MILIMETERS].
2. MATERAIL: ALUMINUM 6005-T5.
   FINISH: CLEAR ANODIZED 15 µm THICK.
3. THE UNSPECIFIED DIMENSIONS ARE SPECIFIED BY 2D CAD FILE.

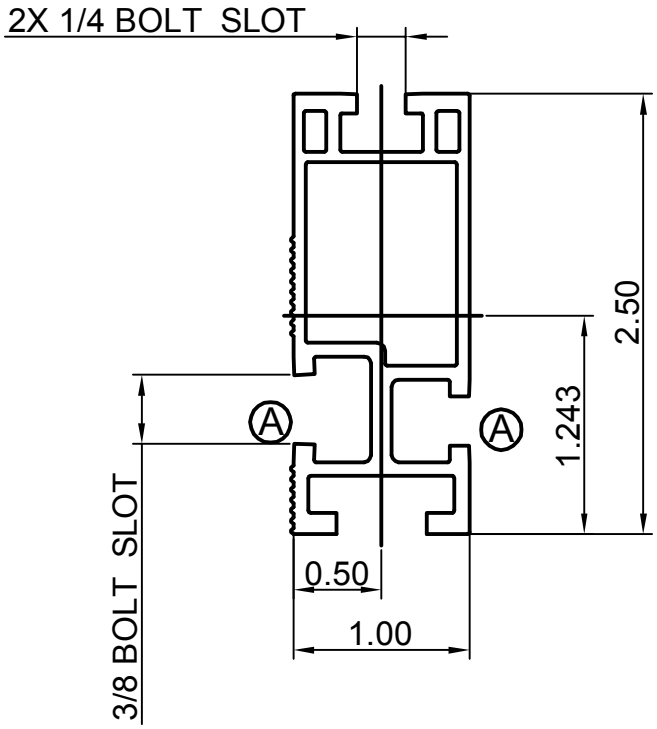

Section properties:

Weight: 0.850 lbs/ft
Area: 0.723 in^2
Perimeter: 17.325 in
Bounding Box: X: -0.500,0.500
Y: -1.243,1.257
Centroid:(0.000,0.000)
Moments of Incertia(in^4): Ix=0.486,Iy=0.095
Section modulus in bending(in^3): Wx=0.387,Wy=0.190
Radii of Gyration: X: 0.820, Y: 0.363

MATERIAL SEE NOTES	**Sunmodo Corp.**	
Third Angle Projection:	1905 E 5TH STREET, SUITE A, VANCOUVER, WA 98661	
GENERAL SPECIFICATIONS All Dimensions in inches [millimeters] Tolerances X.XXX ± 0.01 [0.25mm] X.XX ± 0.02 [0.50mm] X.X ± 0.039 [1.0mm] Unless otherwise spec'd — Break all sharp edges .010-.020 unless otherwise specified.	TITLE HELIO STANDARD RAIL	
DRAWN BY zcg — DATE 02/21/2013	B — DRAWING NUMBER A20144	
CHECKED BY		
APPROVALS	SCALE: NONE	SHEET 1 of 1

NOTES: UNLESS OTHERWISE SPECIFIED

1. DIMENSIONS SHOWN ARE INCHES [MILIMETERS].
2. MATERIAL: 6005-T5.
   FINISH: CLEAR ANODIZED 10um THICK.
3. THE UNSPECIFIED RADII ARE .02" MAX.
4. THE UNSPECIFIED DIMENSIONS ARE SPECIFIED BY 2D CAD FILE.

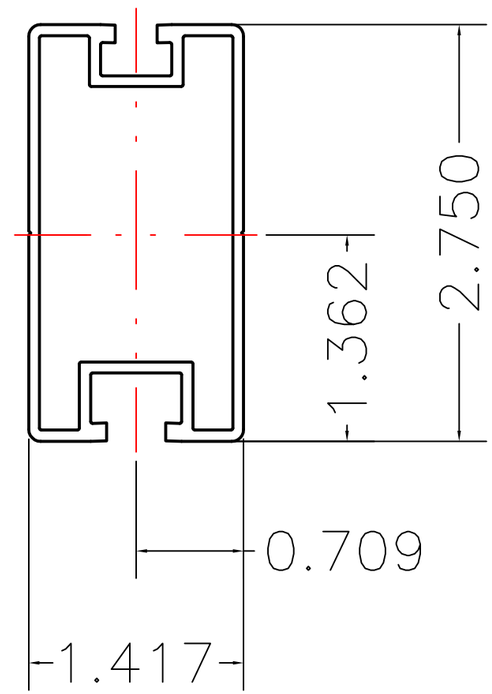

Section properties:

Weight: 0.862 lbs/ft
Area: 0.736 in^2
Perimeter: 19.824 in
Bounding Box: X: -0.709,0.709
Y: -1.362,1.388
Centroid:(0.000,0.000)
Moments of Incertia(in^4): Ix=0.727,Iy=0.214
Section modulus in bending(in^3): Wx=0.524,Wy=0.302
Radii of Gyration: X: 994, Y: 0.539

MATERIAL SEE NOTES		**SunModo Corp.** 14800 NE 65TH STREET, VANCOUVER WA 98682
Third Angle Projection:		
GENERAL SPECIFICATIONS All Dimensions in Inches [millimeters] Tolerances X.XXX ±0.01 [0.25mm] X.XX ±0.02 [0.50mm] X.X ±0.039 [1.0mm] Unless otherwise spec'd	Break all sharp edges .010-.020 unless otherwise specified.	TITLE RAIL, HR300 (SUNRAY), EXTRUSION
DRAWN BY KYY	DATE 01/18/2018	
CHECKED BY		B — DRAWING NUMBER A20288
APPROVALS		SCALE: NONE — SHEET 1 of 1

REV	DESCRIPTON	BY	DATE
A	0.44 WAS 0.41, 0.44 WAS 0.33	LWF	11/30/2015

NOTES: UNLESS OTHERWISE SPECIFIED

1. DIMENSIONS SHOWN ARE INCHES [MILIMETERS].
2. MATERAIL: ALUMINUM 6005-T5.
   FINISH: CLEAR ANODIZED 15 µm THICK.
3. THE UNSPECIFIED DIMENSIONS ARE SPECIFIED BY 2D CAD FILE.

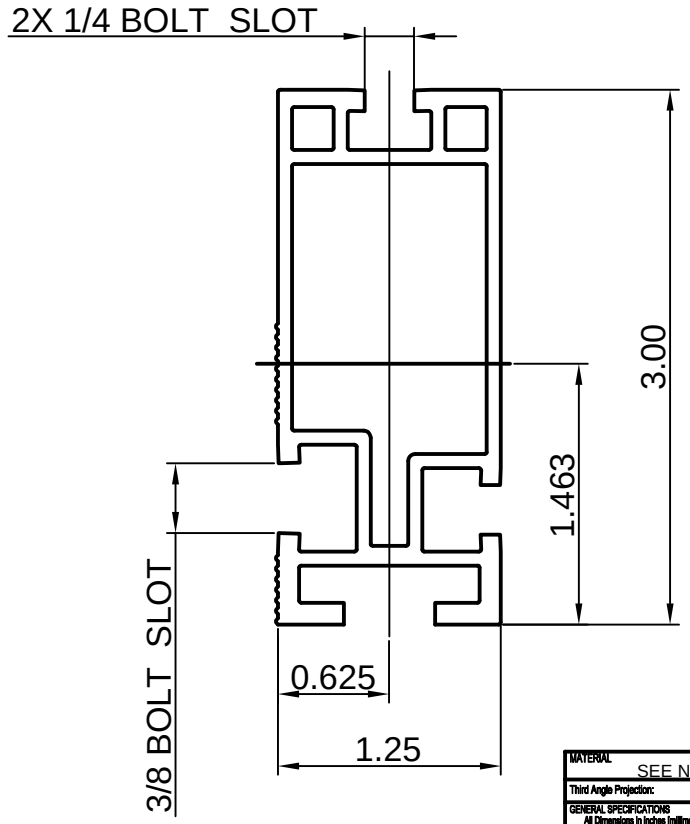

Section properties:

Weight: 1.151 lbs/ft
Area: 0.980 in^2
Perimeter: 22.104 in
Bounding Box: X: -0.625,0.625
Y: -1.463,1.537
Centroid:(0.000,0.000)
Moments of Inertia(in^4): Ix=1.047,Iy=0.207
Section modulus in bending(in^3): Wx=0.681,Wy=0.331
Radii of Gyration: X: 1.034, Y: 0.460

MATERIAL: SEE NOTES
Third Angle Projection:
GENERAL SPECIFICATIONS
All Dimensions in Inches [millimeters]
Tolerances
X.XXX ±0.01 [0.25mm]
X.XX ±0.02 [0.50mm]
X.X ±0.039 [1.0mm]
Unless otherwise specf'd
Break all sharp edges .010-.020 unless otherwise specified.
DRAWN BY: zcg
DATE: 02/21/2013
CHECKED BY
APPROVALS

Sunmodo Corp.
1905 E 5TH STREET, SUITE A, VANCOUVER, WA 98661

TITLE: HELIO HEAVY RAIL
B
DRAWING NUMBER: A20145
SCALE: NONE
SHEET 1 of 1

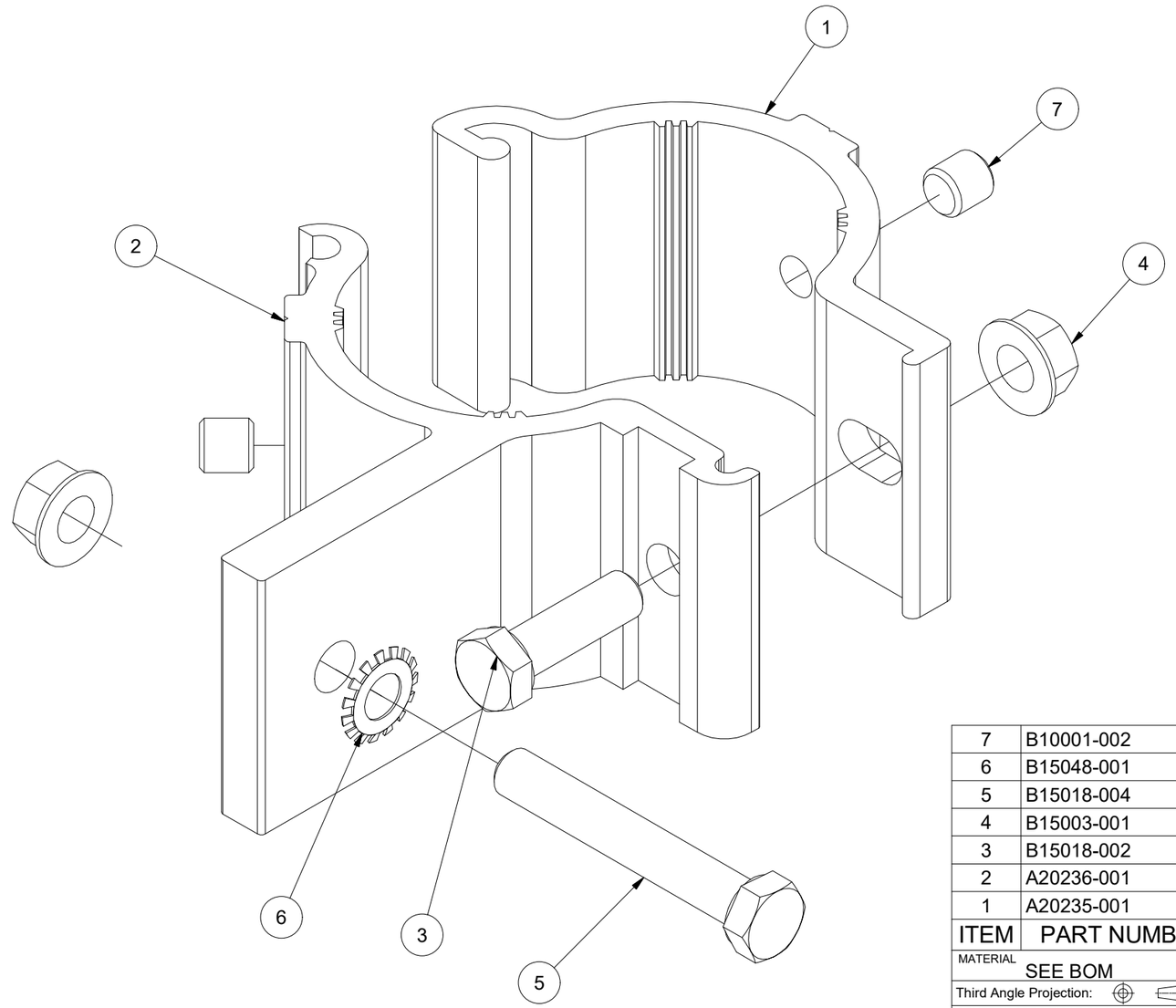

ITEM	PART NUMBER	DESCRIPTION	QTY
7	B10001-002	SET SCREW M10X10	2
6	B15048-001	STAR WASHER FOR 3/8 BOLT	1
5	B15018-004	HEX CAP SCREW 3/8-16 X2.5	1
4	B15003-001	FLANGE NUT 3/8-16	2
3	B15018-002	HEX CAP SCREW 3/8-16 X 1.25	1
2	A20236-001	2 AL PIPE CLAMP, FEMALE	1
1	A20235-001	2 AL PIPE CLAMP, MALE	1

MATERIAL: SEE BOM

Third Angle Projection:

GENERAL SPECIFICATIONS
All Dimensions in inches [millimeters]
Tolerances
X.XXX ±0.01 [0.25mm]
X.XX ±0.02 [0.50mm]
X.X ±0.039 [1.0mm]
Unless otherwise spec'd

Break all sharp edges .010-.020 unless otherwise specified.

DRAWN BY: zcg
DATE: 08/12/2015
CHECKED BY:
APPROVALS:

Sunmodo Corp.

1905 E 5TH STREET, STE A, VANCOUVER, WA 98661

TITLE: 2 AL PIPE CLAMP KIT

B — DRAWING NUMBER: K10219-001

SCALE: NONE — SHEET 1 of 1

REVISIONS			
REV	DESCRIPTION	BY	DATE
A	INITIAL RELEASE	LWF	06/12/2018
B	ADD C10005-006	LWF	06/27/2018

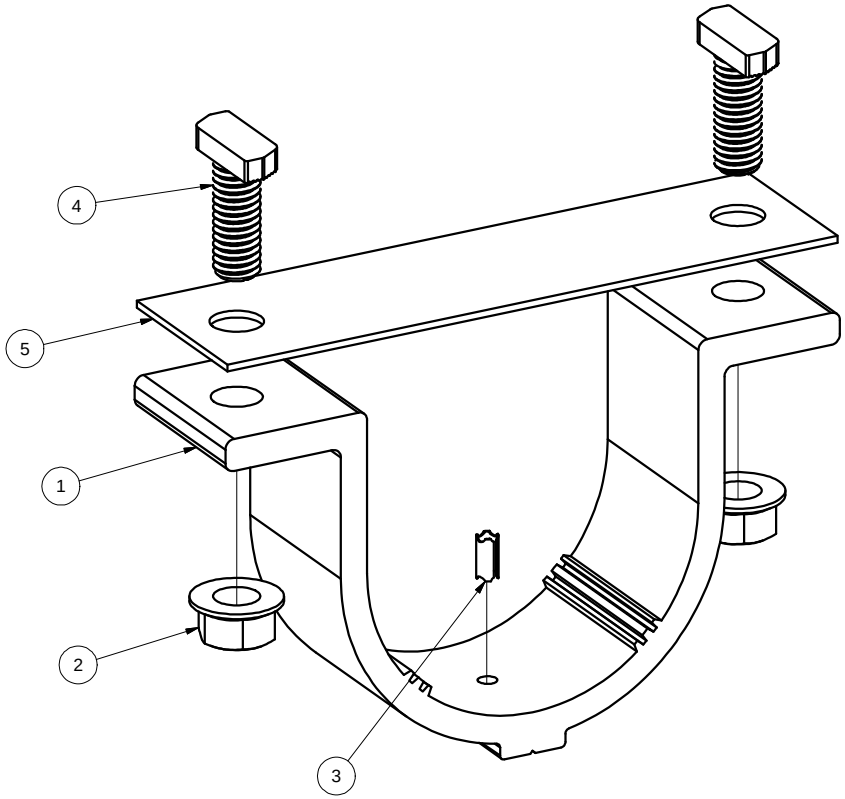

ITEM	PART NUMBER	DESCRIPTION	QTY
5	C10005-006	PVC GASKTE T=1.5mm	1
4	B50033-001	T-BOLT, RAIL BOTTOM SLOT, 3/8-16 X 1"	2
3	B20018-002	GROUNDING PIN	1
2	B15003-001	FLANGE NUT 3/8-16	2
1	A20329-001	2.5" AL PIPE U-BOLT	1

MATERIAL: SEE NOTES

Third Angle Projection:

GENERAL SPECIFICATIONS
All Dimensions in inches [millimeters]
Tolerances
X.XXX ±0.01 [0.25mm]
X.XX ±0.02 [0.50mm]
X.X ±0.039 [1.0mm]
Unless otherwise spec'd

Break all sharp edges .010-.020 unless otherwise specified.

DRAWN BY: KYY
DATE: 06/12/2018
CHECKED BY:
APPROVALS:

SunModo Corp.

14800 NE 65TH STREET, VANCOUVER WA 98682

TITLE: 2.5" AL PIPE U-CLAMP KIT

B

DRAWING NUMBER: K10343-001

SCALE: NONE

SHEET 1 of 1

REVISIONS			
REV	DESCRIPTION	BY	DATE
A	INITIAL RELEASE	zcg	09/25/2015

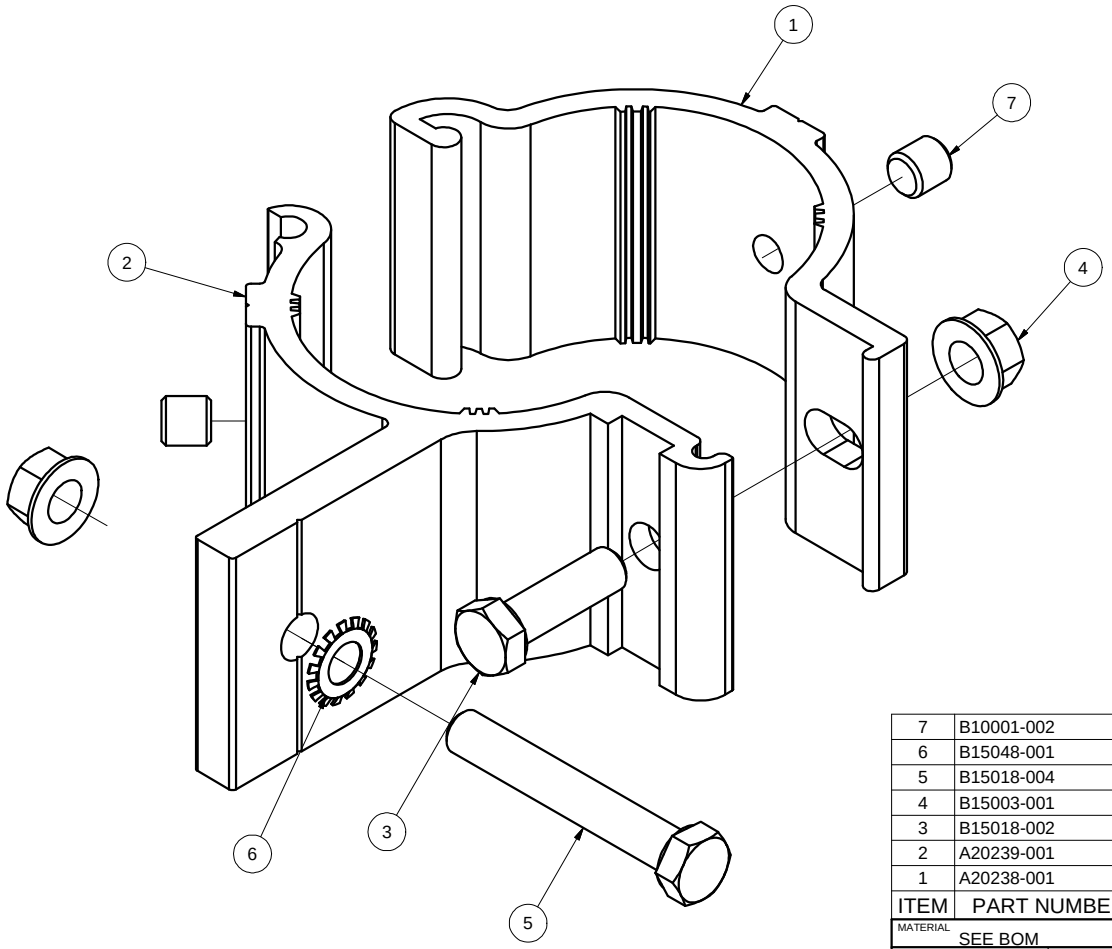

ITEM	PART NUMBER	DESCRIPTION	QTY
7	B10001-002	SET SCREW M10X10	2
6	B15048-001	STAR WASHER FOR 3/8 BOLT	1
5	B15018-004	HEX CAP SCREW 3/8-16 X2.5	1
4	B15003-001	FLANGE NUT 3/8-16	2
3	B15018-002	HEX CAP SCREW 3/8-16 X 1.25	1
2	A20239-001	2.5 AL PIPE CLAMP, FEMALE	1
1	A20238-001	2.5 AL PIPE CLAMP, MALE	1

MATERIAL: SEE BOM

Third Angle Projection:

GENERAL SPECIFICATIONS
All Dimensions in inches [millimeters]
Tolerances
X.XXX ±0.01 [0.25mm]
X.XX ±0.02 [0.50mm]
X.X ±0.039 [1.0mm]
Unless otherwise spec'd

Break all sharp edges .010-.020 unless otherwise specified.

DRAWN BY: LWF
DATE: 08/21/2015
CHECKED BY:
APPROVALS:

Sunmodo Corp.

1905 E 5TH STREET, STE A, VANCOUVER, WA 98661

TITLE: 2.5 AL PIPE CLAMP KIT

B

DRAWING NUMBER: K10222-001

SCALE: NONE

SHEET 1 of 1

REVISIONS			
REV	DESCRIPTION	BY	DATE
A	INITIAL RELEASE	LWF	06/12/2018

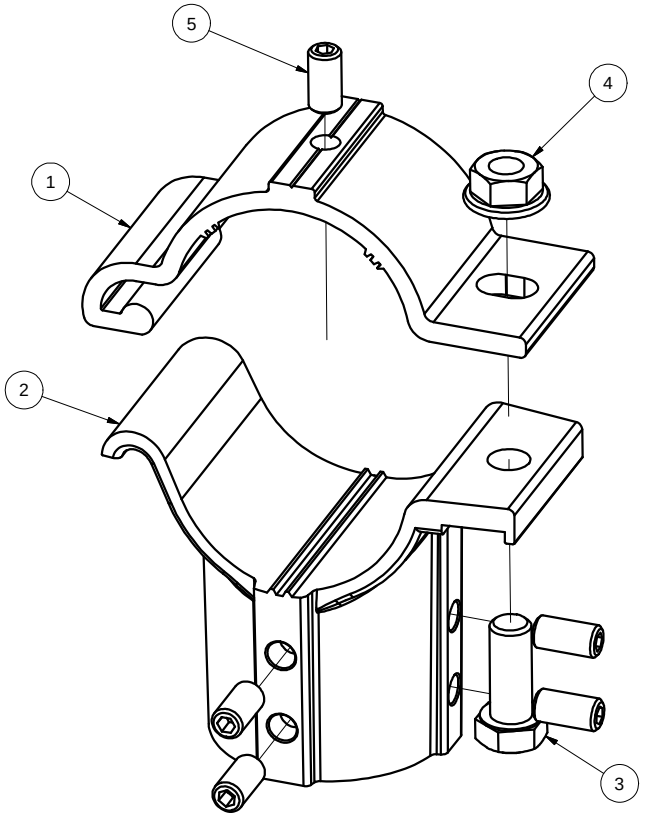

ITEM	PART NUMBER	DESCRIPTION	QTY
5	B10001-001	SET SCREW M10X20	5
4	B15020-001	FLANGE NUT 1/2-13	1
3	B15014-005	HEX CAP SCREW 1/2-13 X 1.25", 304 SS	1
2	A20327-001	2.5" AL PIPE TEE, FEMALE	1
1	A20326-001	2.5" AL PIPE TEE, MALE	1

MATERIAL: SEE NOTES

Third Angle Projection:

GENERAL SPECIFICATIONS
All Dimensions in inches [millimeters]
Tolerances
X.XXX ±0.01 [0.25mm]
X.XX ±0.02 [0.50mm]
X.X ±0.039 [1.0mm]
Unless otherwise spec'd

Break all sharp edges .010-.020 unless otherwise specified.

DRAWN BY: LWF
DATE: 06/12/2018
CHECKED BY:
APPROVALS:

SunModo Corp.

14800 NE 65TH STREET, VANCOUVER WA 98682

TITLE: 2.5" PIPE TEE KIT

B

DRAWING NUMBER: K10341-001

SCALE: NONE

SHEET 1 of 1

REVISIONS			
REV	DESCRIPTION	BY	DATE
A	INITIAL RELEASE	LWF	06/12/2018

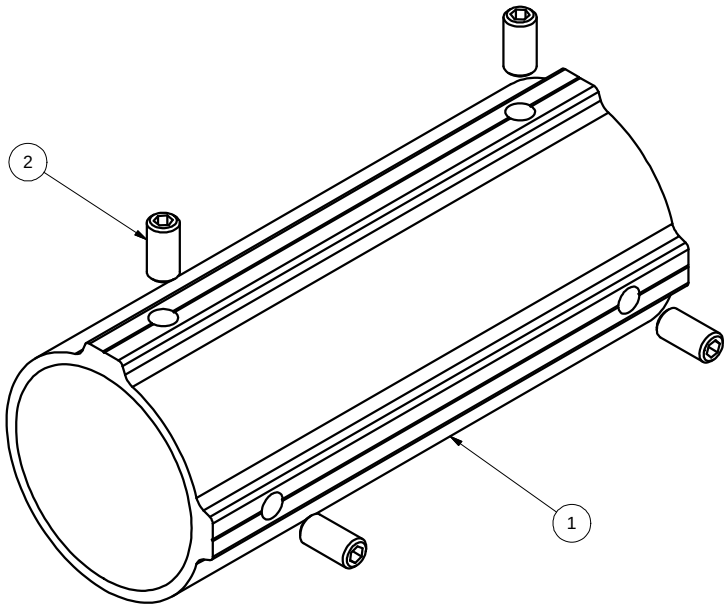

ITEM	PART NUMBER	DESCRIPTION	QTY
2	B10001-001	SET SCREW M10X20	4
1	A20328-001	2.5" PIPE SPLICE	1

MATERIAL: SEE NOTES

Third Angle Projection:

GENERAL SPECIFICATIONS
All Dimensions in inches [millimeters]
Tolerances
X.XXX ±0.01 [0.25mm]
X.XX ±0.02 [0.50mm]
X.X ±0.039 [1.0mm]
Unless otherwise spec'd

Break all sharp edges .010-.020 unless otherwise specified.

DRAWN BY: LWF
DATE: 06/12/2018
CHECKED BY:
APPROVALS:

SunModo Corp.

14800 NE 65TH STREET, VANCOUVER WA 98682

TITLE: 2.5" PIPE SPLICE KIT

B

DRAWING NUMBER: K10342-001

SCALE: NONE

SHEET 1 of 1