Project Number: U2716-0255-201

September 16, 2020

Sunmodo
14800 NE 65th Street
Vancouver, WA 98682

REFERENCE: Sunmodo Sunturf Ground Mount C4
Ground Mount PV Array Installation

To Whom It May Concern:

Per request of Sunmodo, we have been asked to prepare the structural design of a ground-mounted PV solar array system with several foundation options as shown in the attached calculations. The adopted building code in this jurisdiction is the California Building Code, 2019 Edition (2018 IBC). Vector Structural Engineering requires that we review each site specific install, and we are not liable for installs at site specific locations we have not reviewed. The following design parameters are used in our analysis:

- Minimum Design Loads for Buildings and Other Structures (ASCE 7-16)
- Design wind speed for risk category I structures: 110 mph
- Wind exposure: C
- Ground snow load: 0 psf
- The ground screws and helical piers must be tested to 1.5 times uplift and 2.0 times lateral reactions found in the table below. A minimum of one ground screw or helical pier must be tested.

Load (ASD)	Value (lbs)	Factor of Safety	Test Value (lbs)
UPLIFT	1915	1.5	2875
LATERAL	870	2	1740

Foundation concrete shall have a minimum compressive strength of 2500 psi at 28 days. Cement for all concrete shall be Type I or II with a minimum of 6% entrained air with a water/cement ratio of 0.50. Maximum aggregate size shall be 3/4". No special inspection of concrete strength is required.

Footings are designed based on an allowable soil bearing pressure of 1500 psf an allowable skin friction of 250 psf, an allowable lateral bearing pressure of 150 pcf, and a coefficient of friction of 0.3. Vector Structural Engineering strongly recommends independent soils testing be performed by a licensed geotechnical engineer to verify the assumed soil parameters.

All ground mounts are to be installed per manufacturer's recommendations. The use of solar panel support span tables provided by the manufacturer is allowed only where the site conditions and solar panel configuration match the description of the span tables. Electrical engineering is beyond our scope. All work performed must be in accordance with accepted industry-wide methods and applicable safety standards. Vector Structural Engineering assumes no responsibility for improper installation of the solar panels.

Very truly yours,

VECTOR STRUCTURAL ENGINEERING, LLC

REGISTERED PROFESSIONAL ENGINEER
JACOB S. PROCTOR
C 70567
CIVIL
STATE OF CALIFORNIA

Jacob Proctor, P.E.
CA License: 70567 - Expires: 06/30/2021
Project Engineer

Enclosures

JSP/stb

09/16/2020

VECTOR ENGINEERS
651 W GALENA PARK BLVD. #101 (801) 990-1775
DRAPER, UTAH 84020 (801) 990-1776 FAX

JOB NO. U2716-0255-201
PROJECT SUNMODO SUNTURF GROUND MOUNTS C4
SUBJECT ALL OPTIONS

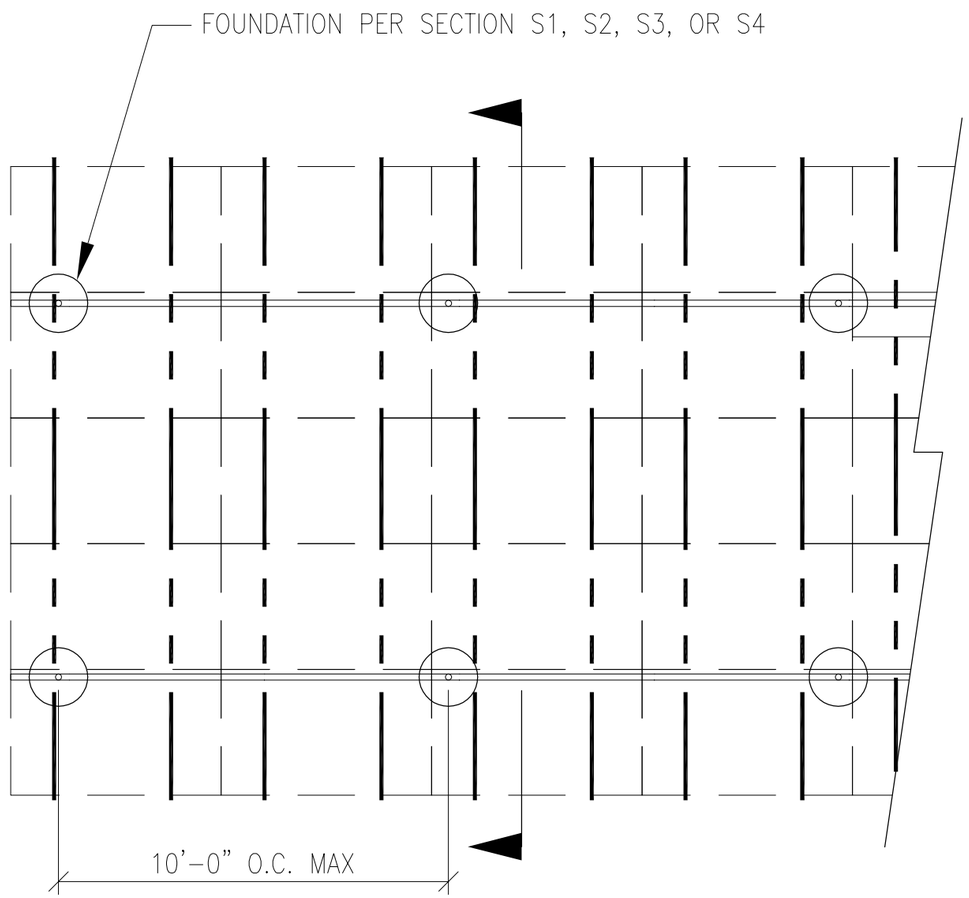

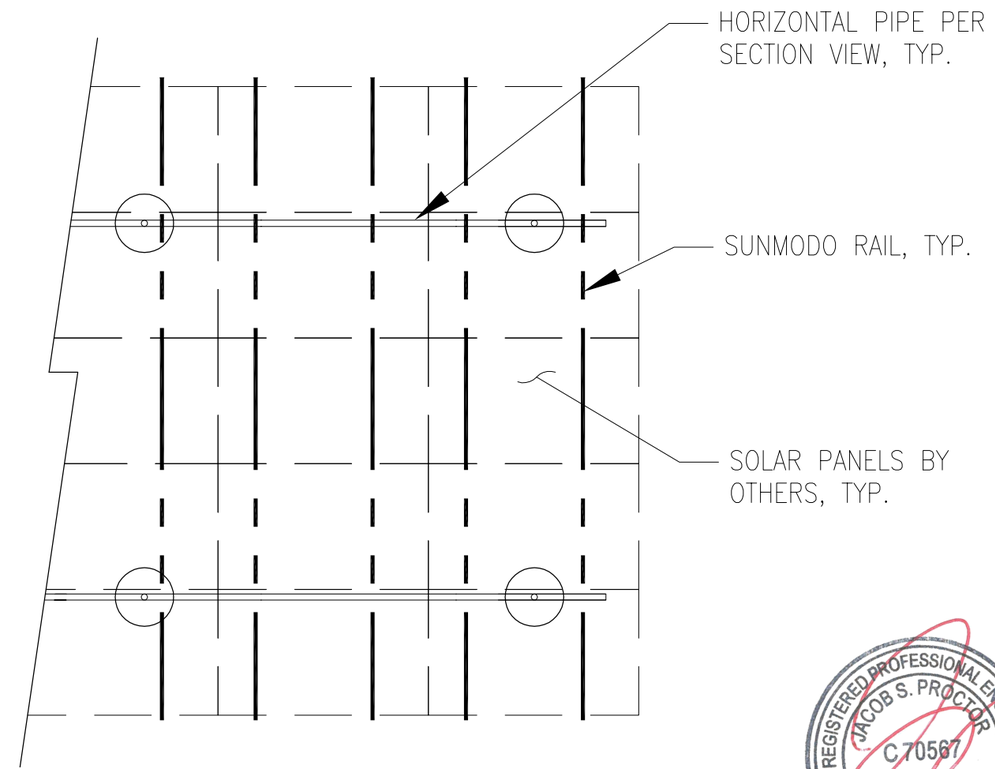

09/16/2020

PV ARRAY PLAN

N.T.S.

P1

Vector Engineers requires that we review each site specific install and is not liable for installs at site specific locations we have not reviewed.

VECTOR ENGINEERS

JOB NO. U2716-0255-201

PROJECT SUNMODO SUNTURF GROUND MOUNTS C4

SUBJECT DRILLED PIER OPTION

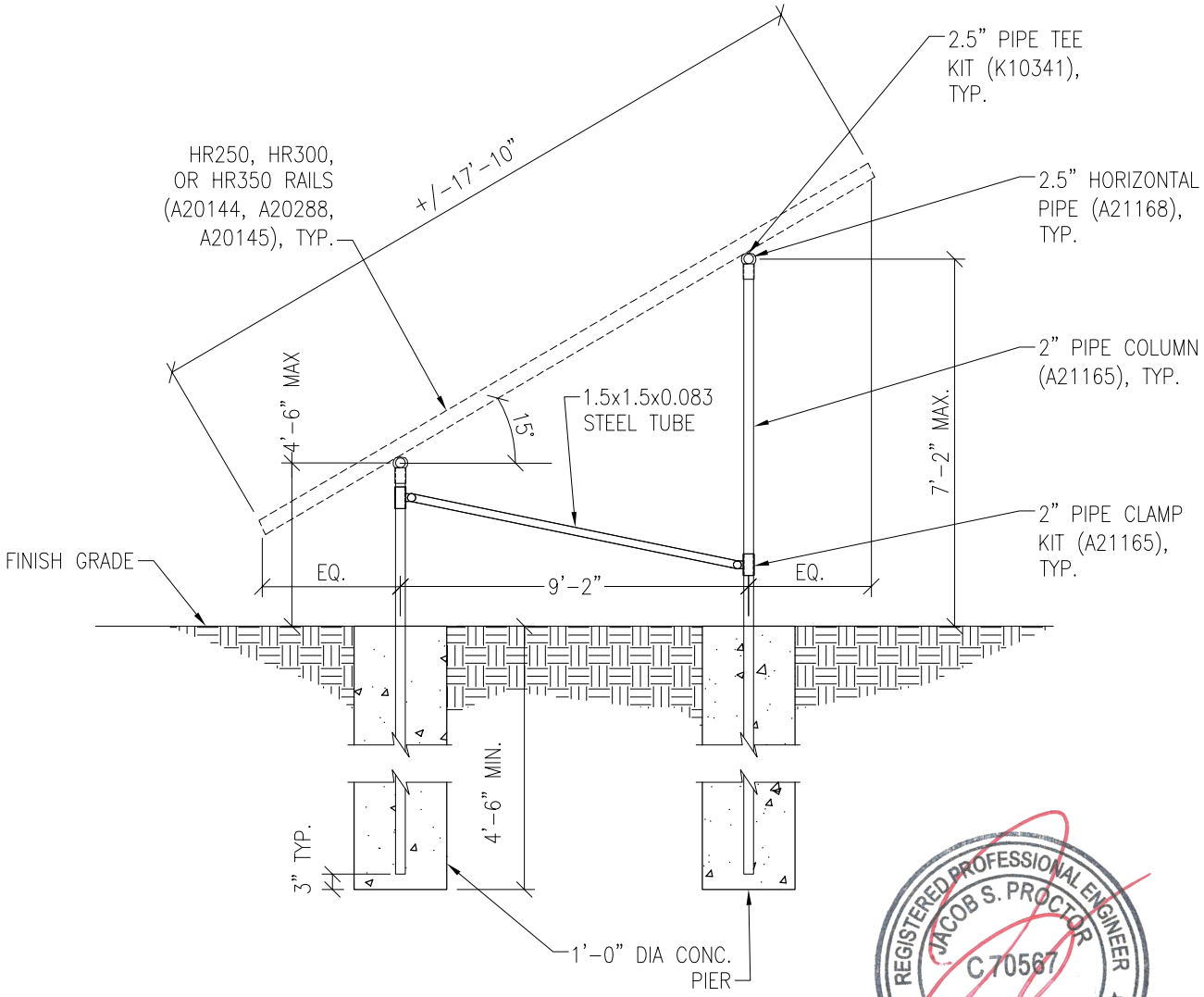

REGISTERED PROFESSIONAL ENGINEER JACOB S. PROCTOR C 70567 CIVIL STATE OF CALIFORNIA

09/16/2020

PV ARRAY SECTION

N.T.S.

S1

651 W GALENA PARK BLVD. #101
DRAPER, UTAH 84020
(801) 990-1775
(801) 990-1776 FAX
WWW.VECTORSE.COM

VECTOR ENGINEERS

JOB NO. U2716-0255-201

PROJECT SUNMODO SUNTURF GROUND MOUNTS C4

SUBJECT HELICAL PIER OPTION

NOTES:

1. For ground mount components see Section S1.
2. A minimum of (1) installed helical pier must be tested as follows:
   - 2.1. Safety factor for uplift to be 1.5
   - 2.2. S.F. for lateral loads to be 2.0
   - 2.3. Upward deflection limit = 1/2"
   - 2.4. Lateral deflection limit = 1"
   - 2.5. The load tests must be performed by an approved contractor

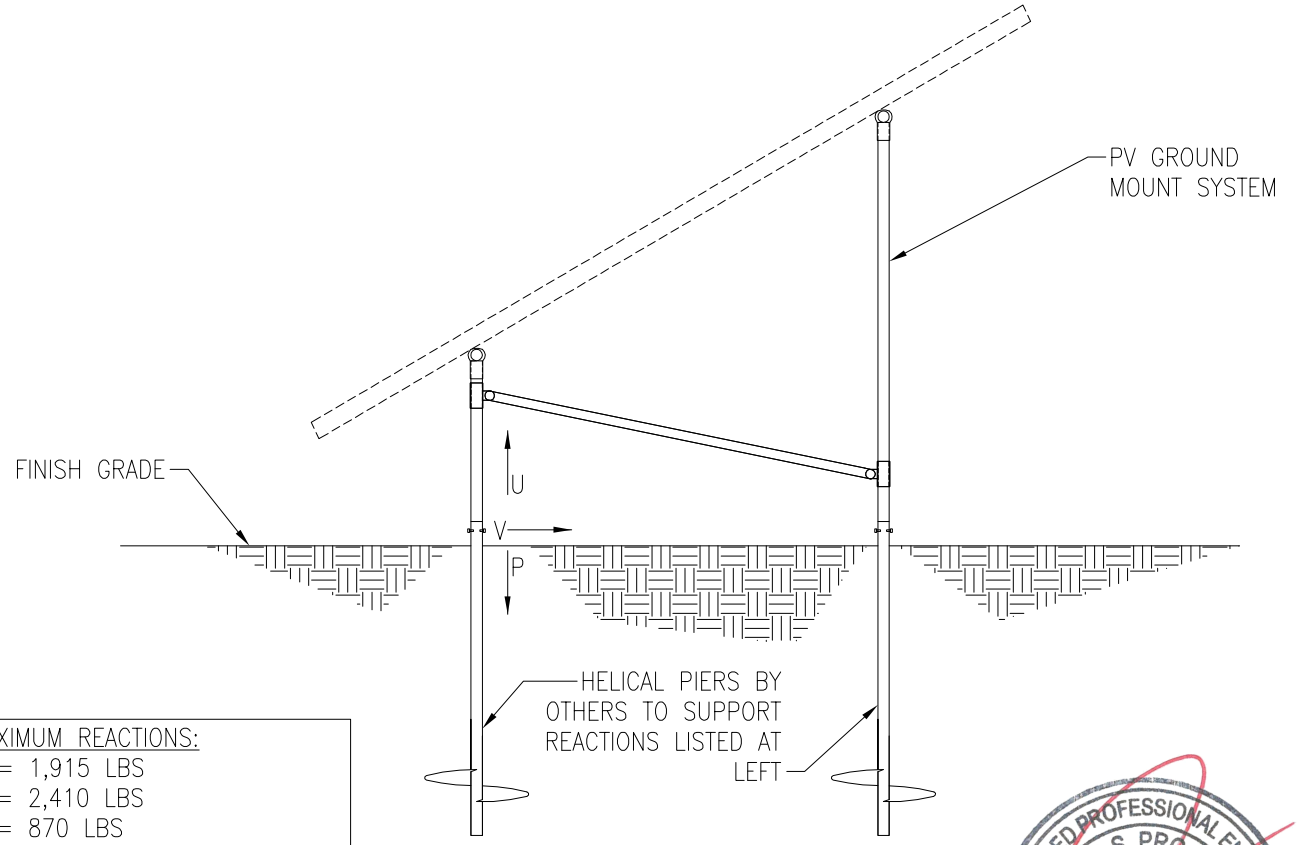

MAXIMUM REACTIONS:
U = 1,915 LBS
P = 2,410 LBS
V = 870 LBS

REGISTERED PROFESSIONAL ENGINEER
JACOB S. PROCTOR
C70567
CIVIL
STATE OF CALIFORNIA

Vector Engineers requires that we review each site specific install and is not liable for installs at site specific locations we have not reviewed.

PV ARRAY SECTION

N.T.S.

09/16/2020

S2

651 W GALENA PARK BLVD. #101
DRAPER, UTAH 84020
(801) 990-1775
(801) 990-1776 FAX
WWW.VECTORSE.COM

VECTOR ENGINEERS

JOB NO. U2716-255-201

PROJECT SUNMODO SUNTURF GROUND MOUNTS C4

SUBJECT GROUND SCREW OPTION

NOTES:

1. For ground mount components see Section S1.
2. A minimum of (1) installed ground screw must be tested as follows:
   - 2.1. Safety factor for uplift to be 1.5
   - 2.2. S.F. for lateral loads to be 2.0
   - 2.3. Upward deflection limit = 1/2"
   - 2.4. Lateral deflection limit = 1"
   - 2.5. The load tests must be performed by an approved contractor

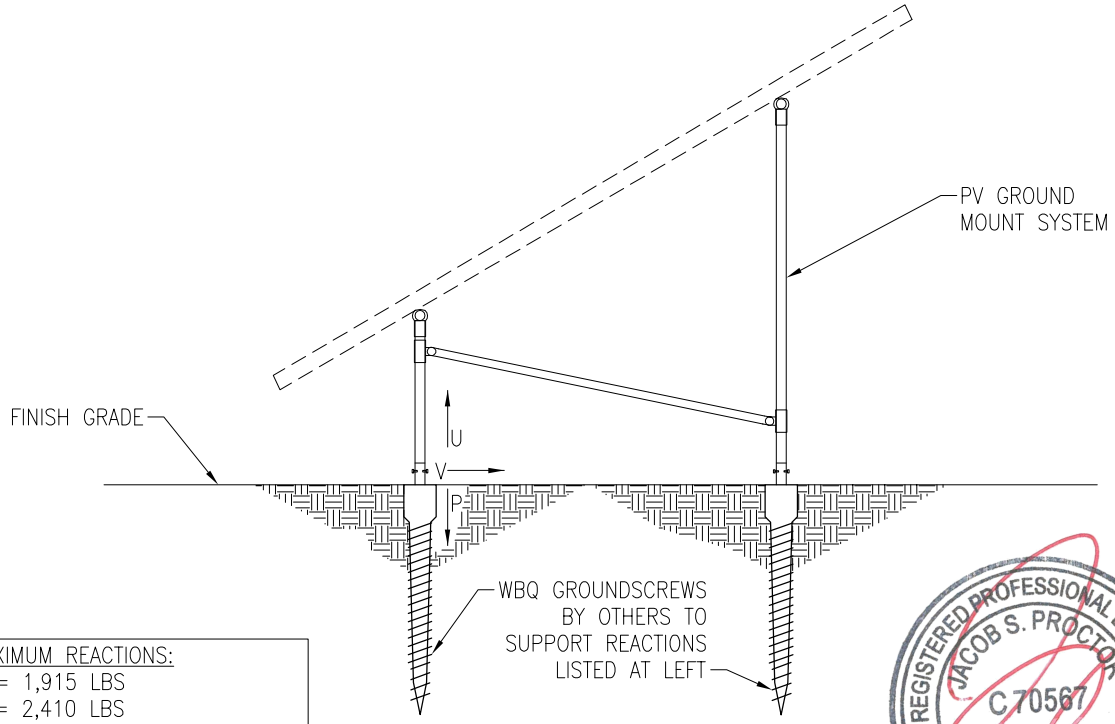

MAXIMUM REACTIONS:
U = 1,915 LBS
P = 2,410 LBS
V = 870 LBS

REGISTERED PROFESSIONAL ENGINEER JACOB S. PROCTOR C 70567 CIVIL STATE OF CALIFORNIA

Vector Engineers requires that we review each site specific install and is not liable for installs at site specific locations we have not reviewed.

PV ARRAY SECTION

N.T.S.

09/16/2020

S3

651 W GALENA PARK BLVD. #101
DRAPER, UTAH 84020
(801) 990-1775
(801) 990-1776 FAX
WWW.VECTORSE.COM

VECTOR ENGINEERS

JOB NO. U2716-0255-201

PROJECT SUNMODO SUNTURF GROUND MOUNTS C4

SUBJECT BALLASTED BLOCK OPTION

NOTES:

1. For ground mount components see Section S1.

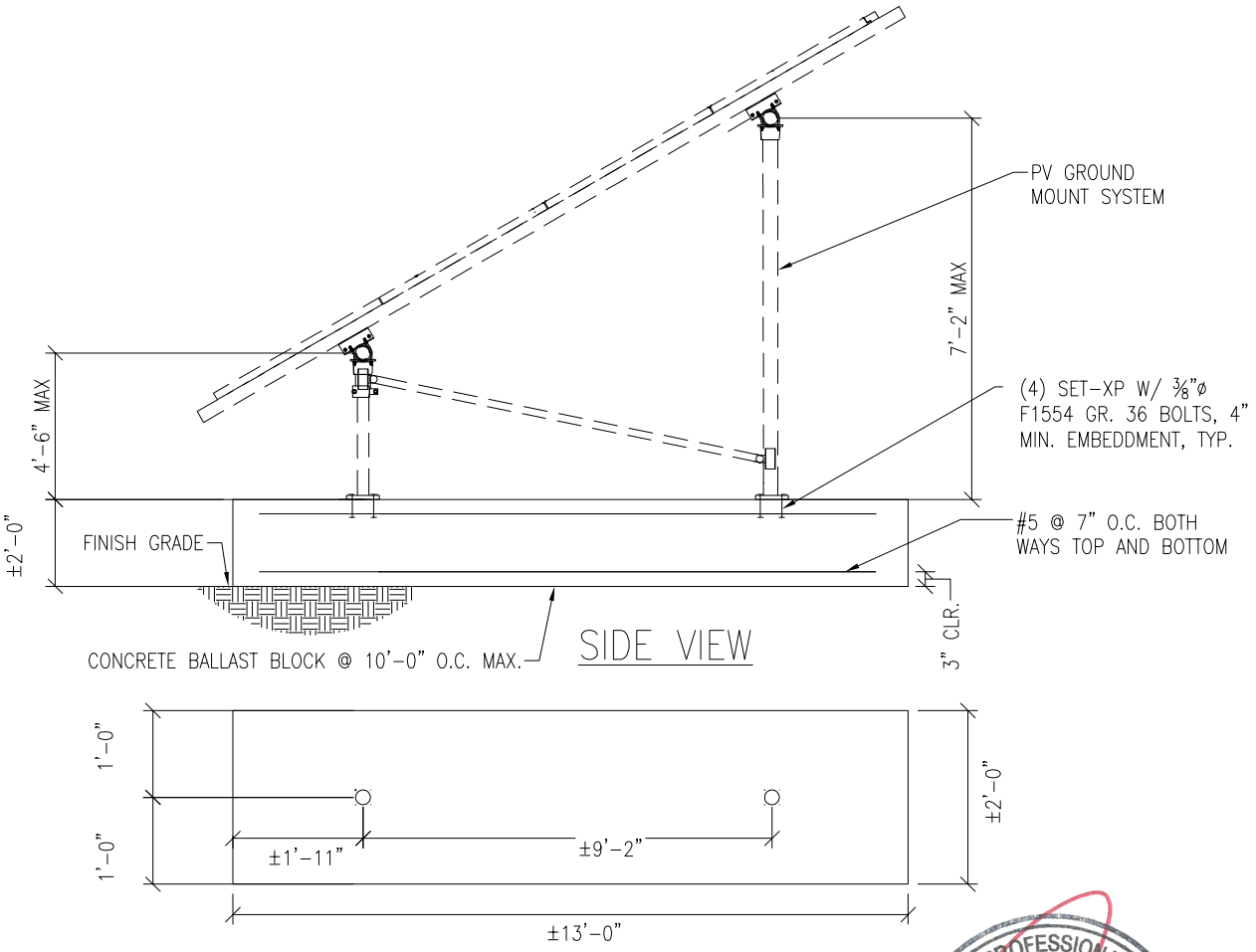

REGISTERED PROFESSIONAL ENGINEER JACOB S. PROCTOR C 70567 CIVIL STATE OF CALIFORNIA

PV ARRAY SECTION

N.T.S.

S4

09/16/2020

651 W GALENA PARK BLVD. #101
DRAPER, UTAH 84020
(801) 990-1775
(801) 990-1776 FAX
WWW.VECTORSE.COM

JOB NO.: U2716.0255.201
SUBJECT: WIND PRESSURES

PROJECT: Sunturf Package C4 Ground Mount

WIND PRESSURES

Calculations per:	ASCE 7-16	
Design Wind Speed, V [mph]:	110	
Risk Category:	I	(Table 1.5-1)
Exposure Category:	C	(Section 26.7)
Elevation [ft]:	837.8	
Ground Elevation Factor, K_e:	1.0	(Table 26.9-1)
α:	9.5	(Table 26.11-1)
z_g [ft]:	900	(Table 26.11-1)
Velocity Pressure Exposure Coefficient, K_h:	0.85	(Table 26.10-1)
Topographic Factor, K_{ht}:	1.0	(Section 26.8)
Wind Directionality Factor, K_d:	0.85	(Table 26.6-1)
Internal Pressure Coefficient, GC_{pi} :	0.00	(Figure 26.13-1)
Velocity Pressure, q_h [psf]:	22.35	(Equation 26.10-1)
Gust Effect Factor, G:	0.85	(Section 26.11.4)
Panel Slope [degrees]:	15.0	
Wind Flow:	Clear	
Roof Configuration:	Monoslope	

Wind Pressures in Transverse (N-S) Direction

Net Pressure Coefficients per Figure 27.3-4

Clear Wind Flow	C_{NW}	C_{NL}
Case 1 (γ = 0°, Load Case A)	-0.9	-1.3
Case 2 (γ = 0°, Load Case B)	-1.9	0.0
Case 3 (γ = 180°, Load Case A)	1.3	1.6
Case 4 (γ = 180°, Load Case B)	1.8	0.6

Design Wind Pressures per Equation 27.3-2 [psf]

Clear Wind Flow	q_hGC_{NW}	q_hGC_{NL}
Case 1 (γ = 0°, Load Case A)	-17.1	-24.7
Case 2 (γ = 0°, Load Case B)	-36.1	0.0
Case 3 (γ = 180°, Load Case A)	24.7	30.4
Case 4 (γ = 180°, Load Case B)	34.2	11.4
Case 5 (γ = 0°, 16 psf Min. Horiz.)	-16.0	-16.0
Case 6 (γ = 180°, 16 psf Min. Horiz)	16.0	16.0

Foundation Option 1: Drilled Concrete Pier

JOB NO.: U2716.0255.201
SUBJECT: CONC. PIER

PROJECT: Sunturf Package C4 Ground Mount

DRILLED CONCRETE PIER DESIGN

Column Reactions:

Max. Shear, V [k]:	0.9	Max. Down, P_d [k]:	2.4
Max. Moment, M [k-ft]:	0.0	Max. Uplift, P_u [k]:	1.9

Pier Properties:

Pier Shape:	Round		
Pier Diameter, b [ft]:	1.0	Volume of Concrete [ft^3]:	4
Top of Pier Elevation [ft]:	0.00	Volume of Concrete [yd^3]:	0.1
Pier Depth, d [ft]:	4.5	Weight of Concrete [k]:	0.5

Soil Properties:

Allow. Bearing Pressure [psf]:	1,500	Optional Parameters for Uplift:	
1/3 increase for short term loads?	No		
		Skin Friction* [psf]:	250
Lateral Bearing, S [pcf]:	150	Top Length to Ignore [ft]:	0
Max. Lateral Bearing (opt'l) [psf]:		1/3 increase for short term loads?	No
Top Depth to Ignore [ft]:	0		
1/3 increase for short term loads?	No	Combine w/ Bearing:	No
1/2" deflection at t/o pier allowed:	Yes		

*per IBC Section 1810.3.3.1.4

Check Bearing:

Bearing Capacity [k]:	3.5	**Bearing capacity OK.**

Check Uplift:

Uplift Capacity [k]:	4.0	**Uplift capacity OK.**

Check Lateral Bearing:

Top of Pier Constrained?:	No	IBC Section1807.3.2.1
Applied Lateral Force, P [lb]:	871	
Point of Application, h [ft]:	0.0	
$S_{\_max}$ [psf]:		
S [psf]:	450	
A = 2.34*P/(Sb):	4.53	
Required Pier Depth, d_{reqd} [ft]:	4.50	IBC Eq. 18-1

Result: **Lateral bearing capacity OK.**

Foundation Option 2: Helical Pier

The ground screws and helical piers must be tested to 1.5 times uplift and 2.0 times lateral reactions found in the table below. A minimum of one ground screw or helical pier must be tested.

Load (ASD)	Value (lbs)	Factor of Safety	Test Value (lbs)
UPLIFT	1915	1.5	2875
LATERAL	870	2	1740

Foundation Option 3: Ground Screw

The ground screws and helical piers must be tested to 1.5 times uplift and 2.0 times lateral reactions found in the table below. A minimum of one ground screw or helical pier must be tested.

Load (ASD)	Value (lbs)	Factor of Safety	Test Value (lbs)
UPLIFT	1915	1.5	2875
LATERAL	870	2	1740

Foundation Option 4: Ballasted Block

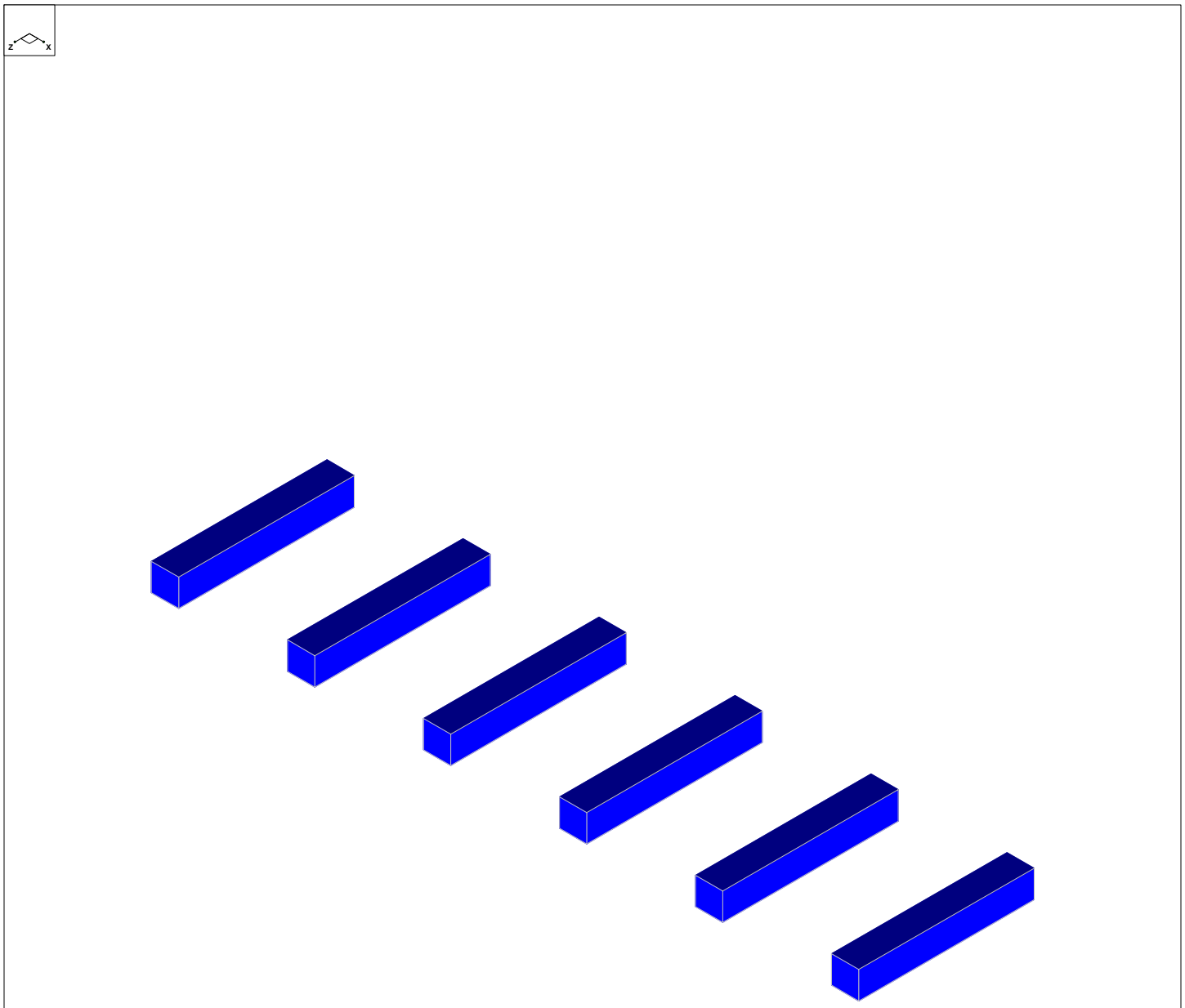

Results for LC 2, 1.0 D

Vector Structural Engineeri...		SK - 1
STB	Ground Mount	Sept 15, 2020 at 3:02 PM
U2716.0255.201		Sunmodo Sunturf C4 v2.r3d

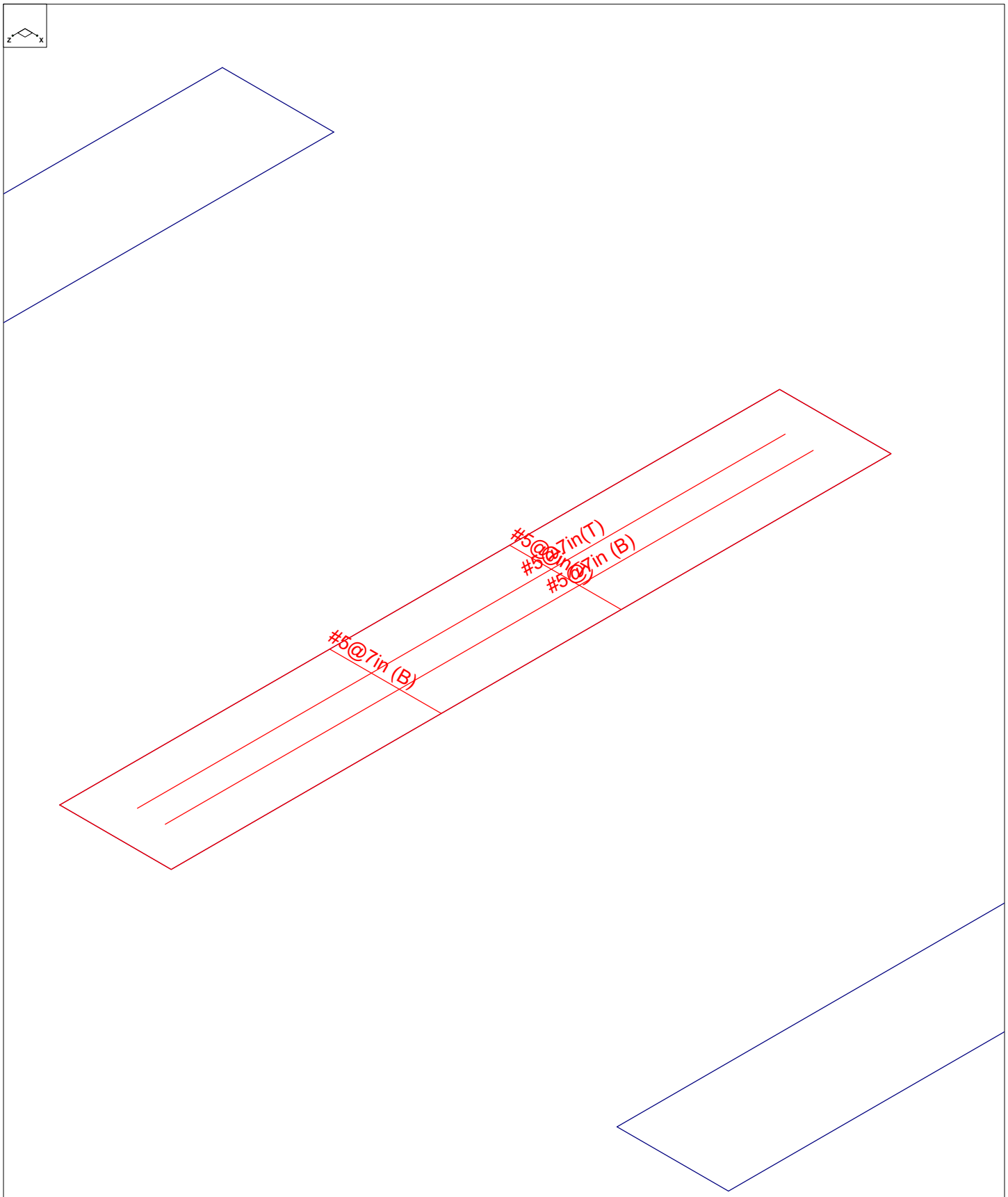

Results for LC 2, 1.0 D

Vector Structural Engineeri...	Ground Mount	SK - 2
STB		Sept 15, 2020 at 3:03 PM
U2716.0255.201		Sunmodo Sunturf C4 v2.r3d

(Global) Model Settings

Display Sections for Member Calcs	5
Max Internal Sections for Member Calcs	100
Mesh Size (in)	12
Max Iterations	10
Merge Tolerance (in)	.12
Solver	Sparse Accelerated
Coefficient of Friction	.3
No. of Shear Regions	4
Shear Region Spacing Increment (in)	4
Min 1 Bar Dia Spacing for Beams?	No
Optimize footings for OTM / Sliding?	Yes
Parme Beta Factor	.65
Pile Safety Factor	3
Concrete Stress Block	0
Concrete Rebar Set	Rectangular
Concrete Code	ASTM A615
HR Steel Pile Code	ACI 318-14
Wood Pile Code	AISC 14th (360-10): ASD AWC NDS-18: ASD

Concrete Properties

	Label	E [ksi]	G [ksi]	Nu	Therm (/...	Density[k/ft^3]	f'c[psi]	Lambda	Flex Stee...	Shear St...
1	Conc3000NW	3156	1372	.15	.6	.145	3000	1	60000	60000
2	Conc3500NW	3409	1482	.15	.6	.145	3500	1	60000	60000
3	Conc4000NW	3644	1584	.15	.6	.145	4000	1	60000	60000
4	Conc3000LW	2085	907	.15	.6	.11	3000	.75	60000	60000
5	Conc3500LW	2252	979	.15	.6	.11	3500	.75	60000	60000
6	Conc4000LW	2408	1047	.15	.6	.11	4000	.75	60000	60000
7	Conc2500NW	3156	1372	.15	.6	.145	2500	1	60000	60000

General Design Parameters

	Label	Max Bending Chk	Max Shear Chk	Top Cover[in]	Bottom Cover[in]
1	Typical	1	1	3	3

Slab Rebar Parameters

	Label	Top Bar	Bottom Bar	Max Top Bar Sp...	Min Top Bar Sp...	Max Bot Bar Sp...	Min Bot Bar Sp...	Spacing Incr...	Rebar Options
1	Typical	#5	#5	7	3	7	3	1	Optimize

Soil Definitions

	Label	Subgrade Modulus[k/ft^3]	Allowable Bearing[psf]	Depth Properties	Default?
1	Default	172.8	1500	None	Yes

Point Loads and Moments (Cat 1 : DL)

	Label	Direction	Magnitude[lb,lb-ft]
1	R3D_N1	X	-36.413
2	R3D_N1	Y	261.529
3	R3D_N2	X	-18.864
4	R3D_N2	Y	225.333
5	R3D_N115_1	X	36.479
6	R3D_N115_1	Y	261.729
7	R3D_N116_1	X	18.85
8	R3D_N116_1	Y	225.172

Point Loads and Moments (Cat 1 : DL) (Continued)

	Label	Direction	Magnitude[lb,lb-ft]
9	R3D_N99_1	Y	347.691
10	R3D_N100_1	X	2.665
11	R3D_N100_1	Y	356.46
12	R3D_N105A_1	Y	345.593
13	R3D_N106A_1	Y	340.798
14	R3D_N111A	Y	345.611
15	R3D_N112A	Y	340.811
16	R3D_N117A	Y	347.6
17	R3D_N118A	X	-2.665
18	R3D_N118A	Y	356.433

Point Loads and Moments (Cat 16 : OL1)

	Label	Direction	Magnitude[lb,lb-ft]
1	R3D_N1	X	157.941
2	R3D_N1	Y	-1349.483
3	R3D_N1	Z	604.997
4	R3D_N2	X	119.76
5	R3D_N2	Y	-958.967
6	R3D_N2	Z	-36.946
7	R3D_N115_1	X	-158.227
8	R3D_N115_1	Y	-1348.868
9	R3D_N115_1	Z	604.917
10	R3D_N116_1	X	-119.835
11	R3D_N116_1	Y	-959.45
12	R3D_N116_1	Z	-36.944
13	R3D_N99_1	Y	-2065.156
14	R3D_N99_1	Z	1076.265
15	R3D_N100_1	X	-15.938
16	R3D_N100_1	Y	-1527.986
17	R3D_N100_1	Z	-51.355
18	R3D_N105A_1	X	-3.327
19	R3D_N105A_1	Y	-2034.556
20	R3D_N105A_1	Z	983.022
21	R3D_N106A_1	X	-3.059
22	R3D_N106A_1	Y	-1484.537
23	R3D_N106A_1	Z	-51.635
24	R3D_N111A	X	3.449
25	R3D_N111A	Y	-2034.595
26	R3D_N111A	Z	982.994
27	R3D_N112A	X	3.111
28	R3D_N112A	Y	-1484.553
29	R3D_N112A	Z	-51.635
30	R3D_N117A	Y	-2065.002
31	R3D_N117A	Z	1076.36
32	R3D_N118A	X	16.051
33	R3D_N118A	Y	-1528.19
34	R3D_N118A	Z	-51.356

Point Loads and Moments (Cat 17 : OL2)

	Label	Direction	Magnitude[lb,lb-ft]
1	R3D_N1	X	304.295
2	R3D_N1	Y	-2351.552
3	R3D_N1	Z	521.395
4	R3D_N2	X	10.27
5	R3D_N2	Y	268.156
6	R3D_N2	Z	-31.473

Point Loads and Moments (Cat 17 : OL2) (Continued)

	Label	Direction	Magnitude[lb,lb-ft]
7	R3D_N115_1	X	-304.884
8	R3D_N115_1	Y	-2351.148
9	R3D_N115_1	Z	521.377
10	R3D_N116_1	X	-10.213
11	R3D_N116_1	Y	267.641
12	R3D_N116_1	Z	-31.473
13	R3D_N99_1	X	1.808
14	R3D_N99_1	Y	-3523.639
15	R3D_N99_1	Z	931.358
16	R3D_N100_1	Y	518.231
17	R3D_N100_1	Z	-44.845
18	R3D_N105A_1	X	-6.141
19	R3D_N105A_1	Y	-3520.432
20	R3D_N105A_1	Z	848.169
21	R3D_N106A_1	X	1.243
22	R3D_N106A_1	Y	472.653
23	R3D_N106A_1	Z	-44.533
24	R3D_N111A	X	6.382
25	R3D_N111A	Y	-3520.513
26	R3D_N111A	Z	848.146
27	R3D_N112A	X	-1.18
28	R3D_N112A	Y	472.653
29	R3D_N112A	Z	-44.533
30	R3D_N117A	X	-1.653
31	R3D_N117A	Y	-3523.331
32	R3D_N117A	Z	931.441
33	R3D_N118A	Y	518.219
34	R3D_N118A	Z	-44.847

Point Loads and Moments (Cat 18 : OL3)

	Label	Direction	Magnitude[lb,lb-ft]
1	R3D_N1	X	-270.05
2	R3D_N1	Y	2215.845
3	R3D_N1	Z	-797.09
4	R3D_N2	X	-123.544
5	R3D_N2	Y	860.173
6	R3D_N2	Z	48.541
7	R3D_N115_1	X	270.553
8	R3D_N115_1	Y	2215.081
9	R3D_N115_1	Z	-797.003
10	R3D_N116_1	X	123.597
11	R3D_N116_1	Y	860.845
12	R3D_N116_1	Z	48.539
13	R3D_N99_1	X	-1.358
14	R3D_N99_1	Y	3363.339
15	R3D_N99_1	Z	-1419.397
16	R3D_N100_1	X	16.123
17	R3D_N100_1	Y	1337.059
18	R3D_N100_1	Z	67.877
19	R3D_N105A_1	X	5.59
20	R3D_N105A_1	Y	3331.557
21	R3D_N105A_1	Z	-1295.506
22	R3D_N106A_1	X	2.601
23	R3D_N106A_1	Y	1310.402
24	R3D_N106A_1	Z	68.042
25	R3D_N111A	X	-5.8

Point Loads and Moments (Cat 18 : OL3) (Continued)

	Label	Direction	Magnitude[lb,lb-ft]
26	R3D_N111A	Y	3331.626
27	R3D_N111A	Z	-1295.469
28	R3D_N112A	X	-2.676
29	R3D_N112A	Y	1310.418
30	R3D_N112A	Z	68.042
31	R3D_N117A	X	1.226
32	R3D_N117A	Y	3363.072
33	R3D_N117A	Z	-1419.522
34	R3D_N118A	X	-16.261
35	R3D_N118A	Y	1337.267
36	R3D_N118A	Z	67.879

Point Loads and Moments (Cat 19 : OL4)

	Label	Direction	Magnitude[lb,lb-ft]
1	R3D_N1	X	-115.203
2	R3D_N1	Y	1068.797
3	R3D_N1	Z	-660.372
4	R3D_N2	X	-162.329
5	R3D_N2	Y	1418.995
6	R3D_N2	Z	40.452
7	R3D_N115_1	X	115.398
8	R3D_N115_1	Y	1068.083
9	R3D_N115_1	Z	-660.267
10	R3D_N116_1	X	162.451
11	R3D_N116_1	Y	1419.489
12	R3D_N116_1	Z	40.449
13	R3D_N99_1	Y	1661.125
14	R3D_N99_1	Z	-1173.476
15	R3D_N100_1	X	21.899
16	R3D_N100_1	Y	2291.914
17	R3D_N100_1	Z	55.856
18	R3D_N105A_1	X	2.519
19	R3D_N105A_1	Y	1619.846
20	R3D_N105A_1	Z	-1072.662
21	R3D_N106A_1	X	4.658
22	R3D_N106A_1	Y	2216.253
23	R3D_N106A_1	Z	56.35
24	R3D_N111A	X	-2.605
25	R3D_N111A	Y	1619.872
26	R3D_N111A	Z	-1072.63
27	R3D_N112A	X	-4.709
28	R3D_N112A	Y	2216.275
29	R3D_N112A	Z	56.35
30	R3D_N117A	Y	1661.016
31	R3D_N117A	Z	-1173.579
32	R3D_N118A	X	-22.029
33	R3D_N118A	Y	2292.191
34	R3D_N118A	Z	55.857

Slabs

	Label	Thickness [in]	Material	Local Axis Angle ...	Analysis Offset [in]	Passive Pressur...	Soil Overburden [psf]
1	S1	24	Conc2500NW	0	0	0	0
2	S2	24	Conc2500NW	0	0	0	0
3	S3	24	Conc2500NW	0	0	0	0
4	S4	24	Conc2500NW	0	0	0	0
5	S5	24	Conc2500NW	0	0	0	0

Slabs (Continued)

	Label	Thickness [in]	Material	Local Axis Angle ...	Analysis Offset [in]	Passive Pressur...	Soil Overburden [psf]
6	S6	24	Conc2500NW	0	0	0	0

Load Combinations

	Label	Solve	Service	A..	SF	Cat..	Fa...	Cat..	Fa...	Cat..	Fa...	Cat..	Fa...	Cat..	Fa...	Cat..	Fa...	Cat..	Fa...	Cat..	Fa...	C...	F...	C...	F...
1	ASD Loads																								
2	1.0 D	Yes	Yes		1.5	DL	1																		
3	1.0 D + 1....	Yes	Yes		1.5	DL	1	RLL	1																
4	1.0 D + 0....	Yes	Yes		1.5	DL	1	RLL		OL1	.6														
5	1.0 D + 0....	Yes	Yes		1.5	DL	1	RLL		OL2	.6														
6	1.0 D + 0....	Yes	Yes		1.5	DL	1	RLL		OL3	.6														
7	1.0 D + 0....	Yes	Yes		1.5	DL	1	RLL		OL4	.6														
8	1.0 D + 0....	Yes	Yes		1.5	DL	1	RLL	.75	OL1	.45														
9	1.0 D + 0....	Yes	Yes		1.5	DL	1	RLL	.75	OL2	.45														
10	1.0 D + 0....	Yes	Yes		1.5	DL	1	RLL	.75	OL3	.45														
11	1.0 D + 0....	Yes	Yes		1.5	DL	1	RLL	.75	OL4	.45														
12	0.6 D + 0....	Yes	Yes			DL	.6	RLL		OL1	.6														
13	0.6 D + 0....	Yes	Yes			DL	.6	RLL		OL2	.6														
14	0.6 D + 0....	Yes	Yes			DL	.6	RLL		OL3	.6														
15	0.6 D + 0....	Yes	Yes			DL	.6	RLL		OL4	.6														
16																									
17	LRFD Loa...																								
18	1.4 D	Yes				DL	1.4	RLL																	
19	1.2 D + 1....	Yes				DL	1.2	RLL	1.6	OL1	.5														
20	1.2 D + 1....	Yes				DL	1.2	RLL	1.6	OL2	.5														
21	1.2 D + 1....	Yes				DL	1.2	RLL	1.6	OL3	.5														
22	1.2 D + 1....	Yes				DL	1.2	RLL	1.6	OL4	.5														
23	1.2 D + 1....	Yes				DL	1.2	RLL		OL1	1														
24	1.2 D + 1....	Yes				DL	1.2	RLL		OL2	1														
25	1.2 D + 1....	Yes				DL	1.2	RLL		OL3	1														
26	1.2 D + 1....	Yes				DL	1.2	RLL		OL4	1														
27	0.9 D + 1....	Yes				DL	.9	RLL		OL1	1														
28	0.9 D + 1....	Yes				DL	.9	RLL		OL2	1														
29	0.9 D + 1....	Yes				DL	.9	RLL		OL3	1														
30	0.9 D + 1....	Yes				DL	.9	RLL		OL4	1														

Design Strips

	Label	Rebar Angle from Pl...	No. of Design Cuts	Design Rule
1	DS1	0	50	Typical
2	DS2	90	50	Typical

Load Categories

	Category	Point Loads	Line Loads	Area Loads
1	DL	18		
2	OL1	34		
3	OL2	34		
4	OL3	36		
5	OL4	34		

Strip Reinforcing

	Label	UC Top	LC	Top Bars	Governing ...	UC Bot	LC	Bot B...	Gover...	UC Shear	LC	Governing De...
1	DS1	.027	25	#5@7in	DS1-X25	.029	28	#5@7in	DS1-...	.051	25	DS1-X13
2	DS2	.001	27	#5@7in	DS2-X26	.002	25	#5@7in	DS2-...	.006	25	DS2-X10

Slab Overturning Safety Factors

	LC	Slab	Angle[deg]	Mo-xx[lb-ft]	Ms-xx[lb-ft]	Mo-zz[lb-ft]	Ms-zz[lb-ft]	Ms-xx/Mo-xx	Ms-zz/Mo-zz
1	2	S1	0	0	51360.714	0	8089.093	9.999+	9.999+
2	2	S2	0	0	52972	0	8190.497	9.999+	9.999+
3	2	S3	0	0	52794.573	0	8178.068	9.999+	9.999+
4	2	S4	0	0	52794.739	0	8178.098	9.999+	9.999+
5	2	S5	0	0	52971.537	0	8201.041	9.999+	9.999+
6	2	S6	0	0	51359.299	0	7867.919	9.999+	9.999+
7	3	S1	0	0	51360.714	0	8089.093	9.999+	9.999+
8	3	S2	0	0	52972	0	8190.497	9.999+	9.999+
9	3	S3	0	0	52794.573	0	8178.068	9.999+	9.999+
10	3	S4	0	0	52794.739	0	8178.098	9.999+	9.999+
11	3	S5	0	0	52971.537	0	8201.041	9.999+	9.999+
12	3	S6	0	0	51359.299	0	7867.919	9.999+	9.999+
13	4	S1	0	10710.618	51695.538	1718.312	8089.093	4.827	4.708
14	4	S2	0	16644.012	52890.903	2175.012	8201.158	3.178	3.771
15	4	S3	0	16280.497	52838.942	2119.12	8178.068	3.246	3.859
16	4	S4	0	16280.742	52839.158	2119.361	8178.098	3.246	3.859
17	4	S5	0	16643.323	52889.85	2175.176	8201.041	3.178	3.77
18	4	S6	0	10706.965	51697.457	1718.664	8089.236	4.828	4.707
19	5	S1	0	15930.785	51695.538	1627.515	8089.093	3.245	4.97
20	5	S2	0	23926	52890.903	1805.414	8190.497	2.211	4.537
21	5	S3	0	23855.354	52838.942	1834.545	8178.068	2.215	4.458
22	5	S4	0	23855.868	52839.158	1834.958	8178.098	2.215	4.457
23	5	S5	0	23924.059	52889.85	1805.051	8190.379	2.211	4.537
24	5	S6	0	15928.643	51697.457	1628.222	8089.236	3.246	4.968
25	6	S1	0	0	58620.025	0	10407.015	9.999+	9.999+
26	6	S2	0	0	63941.281	0	10993.018	9.999+	9.999+
27	6	S3	0	0	63700.489	0	10953.414	9.999+	9.999+
28	6	S4	0	0	63700.883	0	10973.495	9.999+	9.999+
29	6	S5	0	0	63941.759	0	11039.286	9.999+	9.999+
30	6	S6	0	0	58622.343	0	9240.494	9.999+	9.999+
31	7	S1	0	0	61228.799	0	9914.807	9.999+	9.999+
32	7	S2	0	0	68699.31	0	10536.041	9.999+	9.999+
33	7	S3	0	0	68094.903	0	10471.115	9.999+	9.999+
34	7	S4	0	0	68095.283	0	10488.562	9.999+	9.999+
35	7	S5	0	0	68700.452	0	10599.4	9.999+	9.999+
36	7	S6	0	0	61230.002	0	9027.042	9.999+	9.999+
37	8	S1	0	8032.964	51695.538	1288.734	8089.093	6.435	6.277
38	8	S2	0	12483.009	52890.903	1631.259	8201.158	4.237	5.028
39	8	S3	0	12210.373	52838.942	1589.34	8178.068	4.327	5.146
40	8	S4	0	12210.556	52839.158	1589.52	8178.098	4.327	5.145
41	8	S5	0	12482.492	52889.85	1631.382	8201.041	4.237	5.027
42	8	S6	0	8030.223	51697.457	1288.998	8089.236	6.438	6.276
43	9	S1	0	11948.089	51695.538	1220.636	8089.093	4.327	6.627
44	9	S2	0	17944.5	52890.903	1354.061	8190.497	2.947	6.049
45	9	S3	0	17891.516	52838.942	1375.909	8178.068	2.953	5.944
46	9	S4	0	17891.901	52839.158	1376.219	8178.098	2.953	5.942
47	9	S5	0	17943.044	52889.85	1353.788	8190.379	2.948	6.05
48	9	S6	0	11946.482	51697.457	1221.166	8089.236	4.327	6.624
49	10	S1	0	0	56805.197	0	9827.535	9.999+	9.999+
50	10	S2	0	0	61198.961	0	10292.387	9.999+	9.999+
51	10	S3	0	0	60974.01	0	10259.577	9.999+	9.999+
52	10	S4	0	0	60974.347	0	10274.646	9.999+	9.999+
53	10	S5	0	0	61199.203	0	10329.725	9.999+	9.999+
54	10	S6	0	0	56806.582	0	8897.35	9.999+	9.999+
55	11	S1	0	0	58761.778	0	9458.378	9.999+	9.999+
56	11	S2	0	0	64767.483	0	9949.655	9.999+	9.999+
57	11	S3	0	0	64269.82	0	9897.853	9.999+	9.999+

Slab Overturning Safety Factors (Continued)

	LC	Slab	Angle[deg]	Mo-xx[lb-ft]	Ms-xx[lb-ft]	Mo-zz[lb-ft]	Ms-zz[lb-ft]	Ms-xx/Mo-xx	Ms-zz/Mo-zz
58	11	S4	0	0	64270.147	0	9910.946	9.999+	9.999+
59	11	S5	0	0	64768.223	0	9999.81	9.999+	9.999+
60	11	S6	0	0	58762.326	0	8737.261	9.999+	9.999+
61	12	S1	0	10710.618	31017.323	1718.312	4853.456	2.896	2.825
62	12	S2	0	16644.012	31734.542	2175.012	4920.695	1.907	2.262
63	12	S3	0	16280.497	31703.365	2119.12	4906.841	1.947	2.316
64	12	S4	0	16280.742	31703.495	2119.361	4906.859	1.947	2.315
65	12	S5	0	16643.323	31733.91	2175.176	4920.624	1.907	2.262
66	12	S6	0	10706.965	31018.474	1718.664	4853.542	2.897	2.824
67	13	S1	0	15930.785	31017.323	1627.515	4853.456	1.947	2.982
68	13	S2	0	23926	31734.542	1805.414	4914.298	1.326	2.722
69	13	S3	0	23855.354	31703.365	1834.545	4906.841	1.329	2.675
70	13	S4	0	23855.868	31703.495	1834.958	4906.859	1.329	2.674
71	13	S5	0	23924.059	31733.91	1805.051	4914.227	1.326	2.722
72	13	S6	0	15928.643	31018.474	1628.222	4853.542	1.947	2.981
73	14	S1	0	0	38075.739	0	7171.378	9.999+	9.999+
74	14	S2	0	0	42752.481	0	7716.819	9.999+	9.999+
75	14	S3	0	0	42582.66	0	7682.187	9.999+	9.999+
76	14	S4	0	0	42582.987	0	7702.256	9.999+	9.999+
77	14	S5	0	0	42753.144	0	7758.87	9.999+	9.999+
78	14	S6	0	0	38078.624	0	6093.327	9.999+	9.999+
79	15	S1	0	0	40684.514	0	6679.17	9.999+	9.999+
80	15	S2	0	0	47510.51	0	7259.843	9.999+	9.999+
81	15	S3	0	0	46977.074	0	7199.887	9.999+	9.999+
82	15	S4	0	0	46977.388	0	7217.323	9.999+	9.999+
83	15	S5	0	0	47511.837	0	7318.984	9.999+	9.999+
84	15	S6	0	0	40686.282	0	5879.875	9.999+	9.999+

Slab Sliding Safety Factors

	LC	Slab	Angle[deg]	Va-xx[lb]	Vr-xx[lb]	Va-zz[lb]	Vr-zz[lb]	SR-xx	SR-zz
1	2	S1	0	55.277	2393.561	0	2393.561	9.999+	9.999+
2	2	S2	0	2.665	2458.748	0	2458.748	9.999+	9.999+
3	2	S3	0	0	2453.42	0	2453.42	9.999+	9.999+
4	2	S4	0	0	2453.429	0	2453.429	9.999+	9.999+
5	2	S5	0	2.665	2458.713	0	2458.713	9.999+	9.999+
6	2	S6	0	55.329	2393.573	0	2393.573	9.999+	9.999+
7	3	S1	0	55.277	2393.561	0	2393.561	9.999+	9.999+
8	3	S2	0	2.665	2458.748	0	2458.748	9.999+	9.999+
9	3	S3	0	0	2453.42	0	2453.42	9.999+	9.999+
10	3	S4	0	0	2453.429	0	2453.429	9.999+	9.999+
11	3	S5	0	2.665	2458.713	0	2458.713	9.999+	9.999+
12	3	S6	0	55.329	2393.573	0	2393.573	9.999+	9.999+
13	4	S1	0	111.343	1978.04	340.831	1978.04	9.999+	5.804
14	4	S2	0	6.898	1811.982	614.946	1811.982	9.999+	2.947
15	4	S3	0	3.832	1819.984	558.833	1819.984	9.999+	3.257
16	4	S4	0	3.936	1819.983	558.815	1819.983	9.999+	3.257
17	4	S5	0	6.965	1811.938	615.002	1811.938	9.999+	2.946
18	4	S6	0	111.507	1978.076	340.784	1978.076	9.999+	5.804
19	5	S1	0	133.461	2018.55	293.953	2018.55	9.999+	6.867
20	5	S2	0	3.75	1917.775	531.908	1917.775	9.999+	3.605
21	5	S3	0	2.939	1904.82	482.182	1904.82	9.999+	3.95
22	5	S4	0	3.121	1904.814	482.168	1904.814	9.999+	3.951
23	5	S5	0	3.658	1917.793	531.957	1917.793	9.999+	3.605
24	5	S6	0	133.729	2018.542	293.943	2018.542	9.999+	6.867
25	6	S1	0	291.433	2947.245	449.13	2947.245	9.999+	6.562
26	6	S2	0	11.524	3304.82	810.912	3304.82	9.999+	4.075

Slab Sliding Safety Factors (Continued)

	LC	Slab	Angle[deg]	Va-xx[lb]	Vr-xx[lb]	Va-zz[lb]	Vr-zz[lb]	SR-xx	SR-zz
27	6	S3	0	4.915	3288.973	736.478	3288.973	9.999+	4.466
28	6	S4	0	5.086	3288.997	736.456	3288.997	9.999+	4.466
29	6	S5	0	11.687	3304.774	810.986	3304.774	9.999+	4.075
30	6	S6	0	291.819	2947.24	449.079	2947.24	9.999+	6.563
31	7	S1	0	221.797	2841.364	371.952	2841.364	9.999+	7.639
32	7	S2	0	15.804	3170.295	670.572	3170.295	9.999+	4.728
33	7	S3	0	4.306	3143.918	609.787	3143.918	9.999+	5.156
34	7	S4	0	4.388	3143.936	609.768	3143.936	9.999+	5.156
35	7	S5	0	15.883	3170.29	670.633	3170.29	9.999+	4.727
36	7	S6	0	222.039	2841.336	371.891	2841.336	9.999+	7.64
37	8	S1	0	69.688	2081.921	255.623	2081.921	9.999+	8.144
38	8	S2	0	4.507	1973.674	461.21	1973.674	9.999+	4.279
39	8	S3	0	2.874	1978.343	419.124	1978.343	9.999+	4.72
40	8	S4	0	2.952	1978.344	419.111	1978.344	9.999+	4.72
41	8	S5	0	4.557	1973.632	461.251	1973.632	9.999+	4.279
42	8	S6	0	69.798	2081.95	255.588	2081.95	9.999+	8.146
43	9	S1	0	86.277	2112.303	220.465	2112.303	9.999+	9.581
44	9	S2	0	3.479	2053.018	398.931	2053.018	9.999+	5.146
45	9	S3	0	2.204	2041.97	361.636	2041.97	9.999+	5.646
46	9	S4	0	2.341	2041.968	361.626	2041.968	9.999+	5.647
47	9	S5	0	3.41	2053.023	398.967	2053.023	9.999+	5.146
48	9	S6	0	86.465	2112.3	220.457	2112.3	9.999+	9.581
49	10	S1	0	232.394	2808.824	336.847	2808.824	9.999+	8.339
50	10	S2	0	9.31	3093.302	608.184	3093.302	9.999+	5.086
51	10	S3	0	3.686	3080.085	552.359	3080.085	9.999+	5.576
52	10	S4	0	3.814	3080.105	552.342	3080.105	9.999+	5.576
53	10	S5	0	9.431	3093.259	608.24	3093.259	9.999+	5.086
54	10	S6	0	232.697	2808.823	336.809	2808.823	9.999+	8.34
55	11	S1	0	180.167	2729.413	278.964	2729.413	9.999+	9.784
56	11	S2	0	12.52	2992.408	502.929	2992.408	9.999+	5.95
57	11	S3	0	3.23	2971.294	457.34	2971.294	9.999+	6.497
58	11	S4	0	3.291	2971.309	457.326	2971.309	9.999+	6.497
59	11	S5	0	12.579	2992.396	502.975	2992.396	9.999+	5.949
60	11	S6	0	180.362	2729.395	278.918	2729.395	9.999+	9.786
61	12	S1	0	133.454	1020.616	340.831	1020.616	7.648	2.994
62	12	S2	0	7.964	828.483	614.946	828.483	9.999+	1.347
63	12	S3	0	3.832	838.615	558.833	838.615	9.999+	1.501
64	12	S4	0	3.936	838.611	558.815	838.611	9.999+	1.501
65	12	S5	0	8.031	828.453	615.002	828.453	9.999+	1.347
66	12	S6	0	133.639	1020.647	340.784	1020.647	7.637	2.995
67	13	S1	0	155.572	1061.126	293.953	1061.126	6.821	3.61
68	13	S2	0	2.684	934.275	531.908	934.275	9.999+	1.756
69	13	S3	0	2.939	923.452	482.182	923.452	9.999+	1.915
70	13	S4	0	3.121	923.443	482.168	923.443	9.999+	1.915
71	13	S5	0	2.591	934.308	531.957	934.308	9.999+	1.756
72	13	S6	0	155.861	1061.113	293.943	1061.113	6.808	3.61
73	14	S1	0	269.322	1989.82	449.13	1989.82	7.388	4.43
74	14	S2	0	10.458	2321.321	810.912	2321.321	9.999+	2.863
75	14	S3	0	4.915	2307.605	736.478	2307.605	9.999+	3.133
76	14	S4	0	5.086	2307.626	736.456	2307.626	9.999+	3.133
77	14	S5	0	10.62	2321.289	810.986	2321.289	9.999+	2.862
78	14	S6	0	269.688	1989.811	449.079	1989.811	7.378	4.431
79	15	S1	0	199.686	1883.939	371.952	1883.939	9.435	5.065
80	15	S2	0	14.738	2186.796	670.572	2186.796	9.999+	3.261
81	15	S3	0	4.306	2162.55	609.787	2162.55	9.999+	3.546
82	15	S4	0	4.388	2162.564	609.768	2162.564	9.999+	3.547
83	15	S5	0	14.817	2186.805	670.633	2186.805	9.999+	3.261

Slab Sliding Safety Factors (Continued)

	LC	Slab	Angle[deg]	Va-xx[lb]	Vr-xx[lb]	Va-zz[lb]	Vr-zz[lb]	SR-xx	SR-zz
84	15	S6	0	199.907	1883.907	371.891	1883.907	9.424	5.066

Envelope Slab Soil Pressures

	Label	UC	LC	Soil Pressure[psf]	Allowable Bearing[psf]	Point
1	S1	.302	6	453.749	1500	N1
2	S2	.354	6	531.139	1500	N19
3	S3	.353	6	529.866	1500	N23
4	S4	.353	6	529.873	1500	N26
5	S5	.354	6	531.104	1500	N31
6	S6	.302	6	453.708	1500	N34

1.Project information

Customer company:
Customer contact name:
Customer e-mail:
Comment:

Project description:
Location:
Fastening description:

2. Input Data & Anchor Parameters

General
Design method:ACI 318-14
Units: Imperial units

Anchor Information:
Anchor type: Bonded anchor
Material: F1554 Grade 36
Diameter (inch): 0.375
Effective Embedment depth, h_{ef} (inch): 4.000
Code report: ICC-ES ESR-2508
Anchor category: -
Anchor ductility: Yes
h_{min} (inch): 5.88
c_{ac} (inch): 4.82
C_{min} (inch): 1.75
S_{min} (inch): 3.00

Base Material
Concrete: Normal-weight
Concrete thickness, h (inch): 24.00
State: Cracked
Compressive strength, f'_c (psi): 2500
$\Psi_{c,V}$: 1.0
Reinforcement condition: B tension, B shear
Supplemental reinforcement: Not applicable
Reinforcement provided at corners: No
Ignore concrete breakout in tension: No
Ignore concrete breakout in shear: No
Hole condition: Dry concrete
Inspection: Periodic
Temperature range, Short/Long: 150/110°F
Ignore 6do requirement: Not applicable
Build-up grout pad: No

Base Plate
Length x Width x Thickness (inch): 4.75 x 4.75 x 0.31

Recommended Anchor
Anchor Name: SET-XP® - SET-XP w/ 3/8"Ø F1554 Gr. 36
Code Report: ICC-ES ESR-2508

Load and Geometry
Load factor source: ACI 318 Section 5.3
Load combination: not set
Seismic design: No
Anchors subjected to sustained tension: No
Apply entire shear load at front row: No
Anchors only resisting wind and/or seismic loads: No

Strength level loads:

N_{ua} [lb]: 3230
V_{uax} [lb]: 285
V_{uay} [lb]: -1455
M_{ux} [ft-lb]: 0
M_{uy} [ft-lb]: 0
M_{uz} [ft-lb]: 0

<Figure 1>

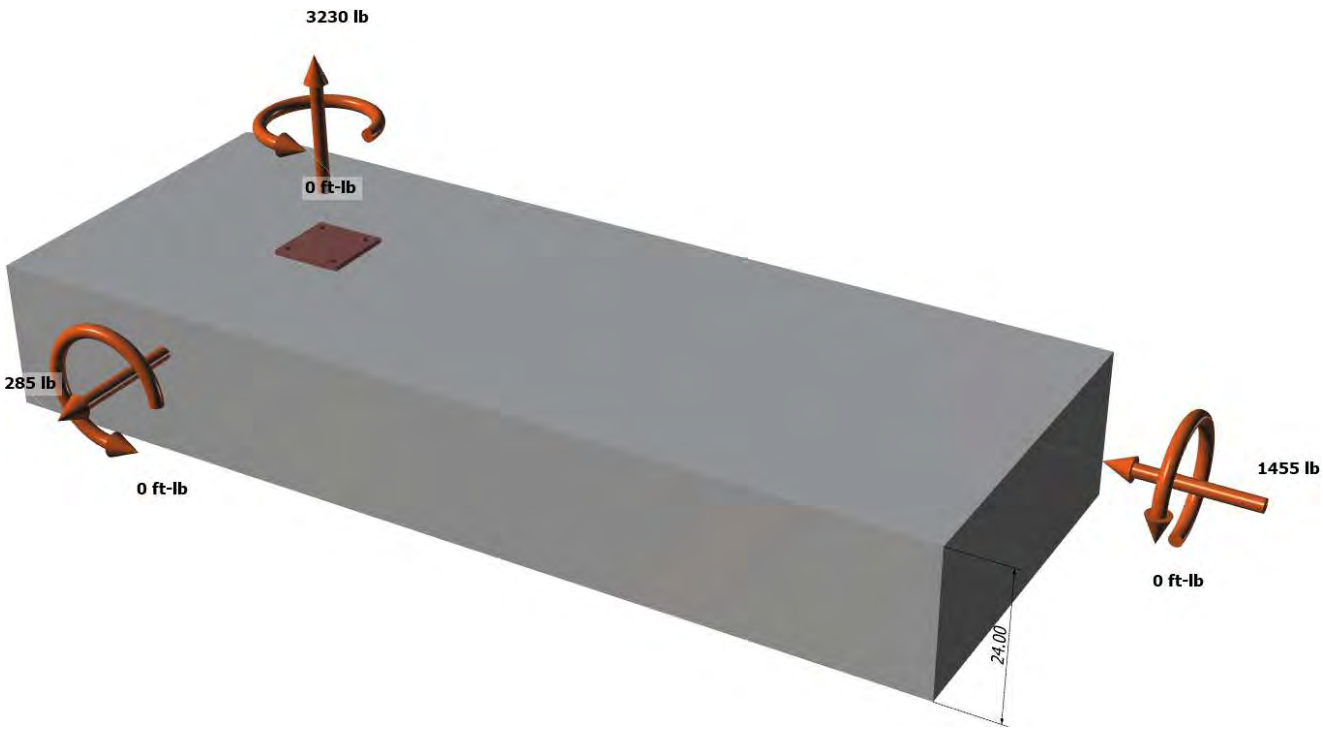

<Figure 2>

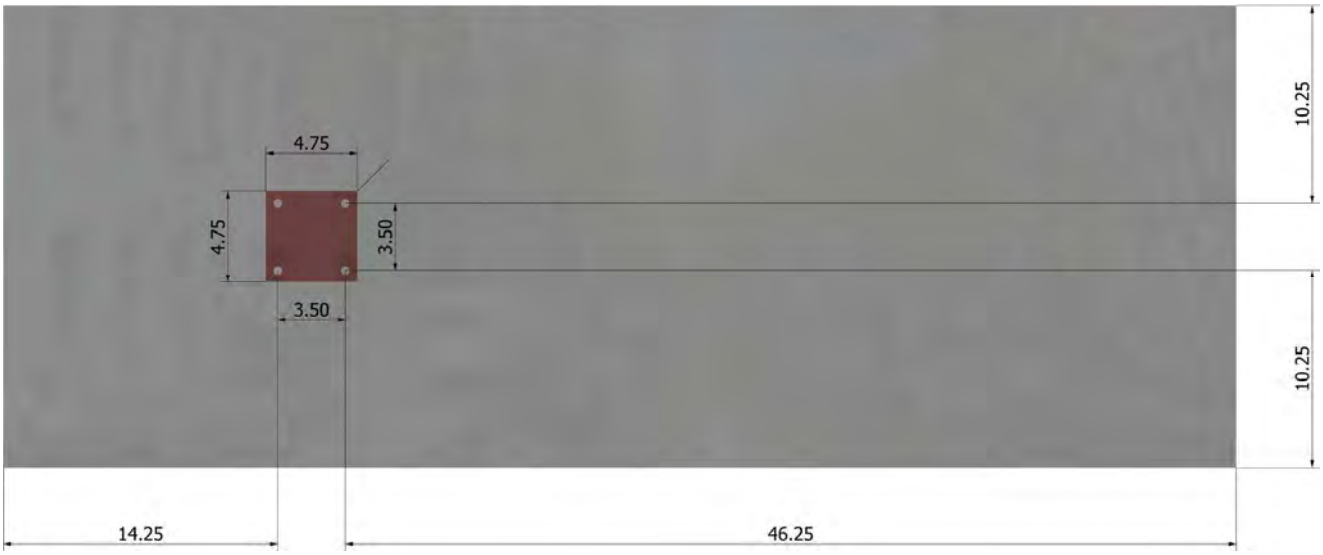

3. Resulting Anchor Forces

Anchor	Tension load, N_{ua} (lb)	Shear load x, V_{uax} (lb)	Shear load y, V_{uay} (lb)	Shear load combined, $\sqrt{(V_{uax})^2+(V_{uay})^2}$ (lb)
1	807.5	71.3	-363.8	370.7
2	807.5	71.3	-363.8	370.7
3	807.5	71.3	-363.8	370.7
4	807.5	71.3	-363.8	370.7
Sum	3230.0	285.0	-1455.0	1482.6

Maximum concrete compression strain (‰): 0.00
Maximum concrete compression stress (psi): 0
Resultant tension force (lb): 3230
Resultant compression force (lb): 0
Eccentricity of resultant tension forces in x-axis, e'_{Nx} (inch): 0.00
Eccentricity of resultant tension forces in y-axis, e'_{Ny} (inch): 0.00
Eccentricity of resultant shear forces in x-axis, e'_{Vx} (inch): 0.00
Eccentricity of resultant shear forces in y-axis, e'_{Vy} (inch): 0.00

<Figure 3>

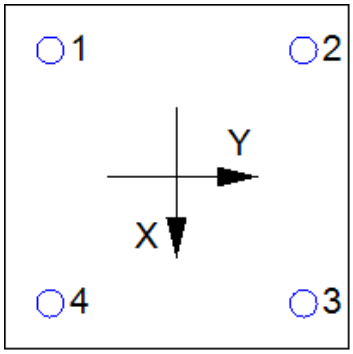

4. Steel Strength of Anchor in Tension (Sec. 17.4.1)

N_{sa} (lb)	ϕ	ϕN_{sa} (lb)
4525	0.75	3394

5. Concrete Breakout Strength of Anchor in Tension (Sec. 17.4.2)

$N_b = k_c \lambda_a \sqrt{f'_c} h_{ef}^{1.5}$ (Eq. 17.4.2.2a)

k_c	λ_a	f'_c (psi)	h_{ef} (in)	N_b (lb)
17.0	1.00	2500	4.000	6800

$\phi N_{cbg} = \phi (A_{Nc} / A_{Nco}) \Psi_{ec,N} \Psi_{ed,N} \Psi_{c,N} \Psi_{cp,N} N_b$ (Sec. 17.3.1 & Eq. 17.4.2.1b)

A_{Nc} (in^2)	A_{Nco} (in^2)	$c_{a,min}$ (in)	$\Psi_{ec,N}$	$\Psi_{ed,N}$	$\Psi_{c,N}$	$\Psi_{cp,N}$	N_b (lb)	ϕ	ϕN_{cbg} (lb)
240.25	144.00	10.25	1.000	1.000	1.00	1.000	6800	0.65	7374

6. Adhesive Strength of Anchor in Tension (Sec. 17.4.5)

$\tau_{k,cr} = \tau_{k,cr} f_{short\text{-}term} K_{sat}$

$\tau_{k,cr}$ (psi)	$f_{short\text{-}term}$	K_{sat}	$\tau_{k,cr}$ (psi)
595	1.00	1.00	595

$N_{ba} = \lambda_a \tau_{cr} \pi d_a h_{ef}$ (Eq. 17.4.5.2)

λ_a	τ_{cr} (psi)	d_a (in)	h_{ef} (in)	N_{ba} (lb)
1.00	595	0.38	4.000	2804

$\phi N_{ag} = \phi (A_{Na} / A_{Na0}) \Psi_{ec,Na} \Psi_{ed,Na} \Psi_{cp,Na} N_{ba}$ (Sec. 17.3.1 & Eq. 17.4.5.1b)

A_{Na} (in^2)	A_{Na0} (in^2)	c_{Na} (in)	$c_{a,min}$ (in)	$\Psi_{ec,Na}$	$\Psi_{ed,Na}$	$\Psi_{cp,Na}$	N_{ba}(lb)	ϕ	ϕN_{ag} (lb)
95.55	39.38	3.14	10.25	1.000	1.000	1.000	2804	0.55	3742

8. Steel Strength of Anchor in Shear (Sec. 17.5.1)

V_{sa} (lb)	ϕ_{grout}	ϕ	$\phi_{grout}\phi V_{sa}$ (lb)
2260	1.0	0.65	1469

9. Concrete Breakout Strength of Anchor in Shear (Sec. 17.5.2)

Shear perpendicular to edge in x-direction:

$V_{bx} = \min|7(l_e / d_a)^{0.2}\sqrt{d_a}\lambda_a\sqrt{f'_c}c_{a1}^{1.5};\ 9\lambda_a\sqrt{f'_c}c_{a1}^{1.5}|$ (Eq. 17.5.2.2a & Eq. 17.5.2.2b)

l_e (in)	d_a (in)	λ_a	f'_c (psi)	c_{a1} (in)	V_{bx} (lb)
3.00	0.375	1.00	2500	13.75	16564

$\phi V_{cbgx} = \phi\,(A_{Vc} / A_{Vco})\Psi_{ec,V}\Psi_{ed,V}\Psi_{c,V}\Psi_{h,V}V_{bx}$ (Sec. 17.3.1 & Eq. 17.5.2.1b)

A_{Vc} (in^2)	A_{Vco} (in^2)	$\Psi_{ec,V}$	$\Psi_{ed,V}$	$\Psi_{c,V}$	$\Psi_{h,V}$	V_{bx} (lb)	ϕ	ϕV_{cbgx} (lb)
791.48	850.78	1.000	0.907	1.000	1.000	16564	0.70	9786

Shear perpendicular to edge in y-direction:

$V_{by} = \min|7(l_e / d_a)^{0.2}\sqrt{d_a}\lambda_a\sqrt{f'_c}c_{a1}^{1.5};\ 9\lambda_a\sqrt{f'_c}c_{a1}^{1.5}|$ (Eq. 17.5.2.2a & Eq. 17.5.2.2b)

l_e (in)	d_a (in)	λ_a	f'_c (psi)	c_{a1} (in)	V_{by} (lb)
3.00	0.375	1.00	2500	16.00	20791

$\phi V_{cbgy} = \phi\,(A_{Vc} / A_{Vco})\Psi_{ec,V}\Psi_{ed,V}\Psi_{c,V}\Psi_{h,V}V_{by}$ (Sec. 17.3.1 & Eq. 17.5.2.1b)

A_{Vc} (in^2)	A_{Vco} (in^2)	$\Psi_{ec,V}$	$\Psi_{ed,V}$	$\Psi_{c,V}$	$\Psi_{h,V}$	V_{by} (lb)	ϕ	ϕV_{cbgy} (lb)
576.00	1152.00	1.000	0.828	1.000	1.000	20791	0.70	6026

Shear parallel to edge in x-direction:

$V_{by} = \min|7(l_e / d_a)^{0.2}\sqrt{d_a}\lambda_a\sqrt{f'_c}c_{a1}^{1.5};\ 9\lambda_a\sqrt{f'_c}c_{a1}^{1.5}|$ (Eq. 17.5.2.2a & Eq. 17.5.2.2b)

l_e (in)	d_a (in)	λ_a	f'_c (psi)	c_{a1} (in)	V_{by} (lb)
3.00	0.375	1.00	2500	14.25	17475

$\phi V_{cbgx} = \phi\,(2)(A_{Vc} / A_{Vco})\Psi_{ec,V}\Psi_{ed,V}\Psi_{c,V}\Psi_{h,V}V_{by}$ (Sec. 17.3.1, 17.5.2.1(c) & Eq. 17.5.2.1b)

A_{Vc} (in^2)	A_{Vco} (in^2)	$\Psi_{ec,V}$	$\Psi_{ed,V}$	$\Psi_{c,V}$	$\Psi_{h,V}$	V_{by} (lb)	ϕ	ϕV_{cbgx} (lb)
513.00	913.78	1.000	1.000	1.000	1.000	17475	0.70	13735

Shear parallel to edge in y-direction:

$V_{bx} = \min|7(l_e / d_a)^{0.2}\sqrt{d_a}\lambda_a\sqrt{f'_c}c_{a1}^{1.5};\ 9\lambda_a\sqrt{f'_c}c_{a1}^{1.5}|$ (Eq. 17.5.2.2a & Eq. 17.5.2.2b)

l_e (in)	d_a (in)	λ_a	f'_c (psi)	c_{a1} (in)	V_{bx} (lb)
3.00	0.375	1.00	2500	10.25	10661

$\phi V_{cbgy} = \phi\,(2)(A_{Vc} / A_{Vco})\Psi_{ec,V}\Psi_{ed,V}\Psi_{c,V}\Psi_{h,V}V_{bx}$ (Sec. 17.3.1, 17.5.2.1(c) & Eq. 17.5.2.1b)

A_{Vc} (in^2)	A_{Vco} (in^2)	$\Psi_{ec,V}$	$\Psi_{ed,V}$	$\Psi_{c,V}$	$\Psi_{h,V}$	V_{bx} (lb)	ϕ	ϕV_{cbgy} (lb)
509.30	472.78	1.000	1.000	1.000	1.000	10661	0.70	16078

10. Concrete Pryout Strength of Anchor in Shear (Sec. 17.5.3)

$\phi V_{cpg} = \phi \min|k_{cp}N_{ag}\ ;\ k_{cp}N_{cbg}| = \phi \min|k_{cp}(A_{Na} / A_{Na0})\Psi_{ec,Na}\Psi_{ed,Na}\Psi_{cp,Na}N_{ba}\ ;\ k_{cp}(A_{Nc} / A_{Nco})\Psi_{ec,N}\Psi_{ed,N}\Psi_{c,N}\Psi_{cp,N}N_b|$ (Sec. 17.3.1 & Eq. 17.5.3.1b)

k_{cp}	A_{Na} (in^2)	A_{Na0} (in^2)	$\Psi_{ed,Na}$	$\Psi_{ec,Na}$	$\Psi_{cp,Na}$	N_{ba} (lb)	N_a (lb)
2.0	95.55	39.38	1.000	1.000	1.000	2804	6804

A_{Nc} (in^2)	A_{Nco} (in^2)	$\Psi_{ec,N}$	$\Psi_{ed,N}$	$\Psi_{c,N}$	$\Psi_{cp,N}$	N_b (lb)	N_{cb} (lb)	ϕ
240.25	144.00	1.000	1.000	1.000	1.000	6800	11345	0.70

ϕV_{cpg} (lb)
9526

11. Results

Interaction of Tensile and Shear Forces (Sec. R17.6)

Tension	Factored Load, N_{ua} (lb)	Design Strength, ϕN_n (lb)	Ratio	Status
Steel	808	3394	0.24	Pass
Concrete breakout	3230	7374	0.44	Pass
Adhesive	**3230**	**3742**	**0.86**	**Pass (Governs)**

Shear	Factored Load, V_{ua} (lb)	Design Strength, ϕV_n (lb)	Ratio	Status
Steel	**371**	**1469**	**0.25**	**Pass (Governs)**
T Concrete breakout x+	285	9786	0.03	Pass
T Concrete breakout y-	1455	6026	0.24	Pass
|| Concrete breakout y-	143	13735	0.01	Pass
|| Concrete breakout x-	728	16078	0.05	Pass
Concrete breakout, combined	-	-	0.24	Pass
Pryout	1483	9526	0.16	Pass

Interaction check	$(N_{ua}/\phi N_{ua})^{5/3}$	$(V_{ua}/\phi V_{ua})^{5/3}$	Combined Ratio	Permissible	Status
Sec. R17.6	0.78	0.10	88.3%	1.0	Pass

SET-XP w/ 3/8"Ø F1554 Gr. 36 with hef = 4.000 inch meets the selected design criteria.

12. Warnings

- When cracked concrete is selected, concrete compressive strength used in concrete breakout strength in tension, adhesive strength in tension and concrete pryout strength in shear for SET-XP adhesive anchor is limited to 2,500 psi per ICC-ES ESR-2508 Section 5.3.

- Designer must exercise own judgement to determine if this design is suitable.

- Refer to manufacturer's product literature for hole cleaning and installation instructions.

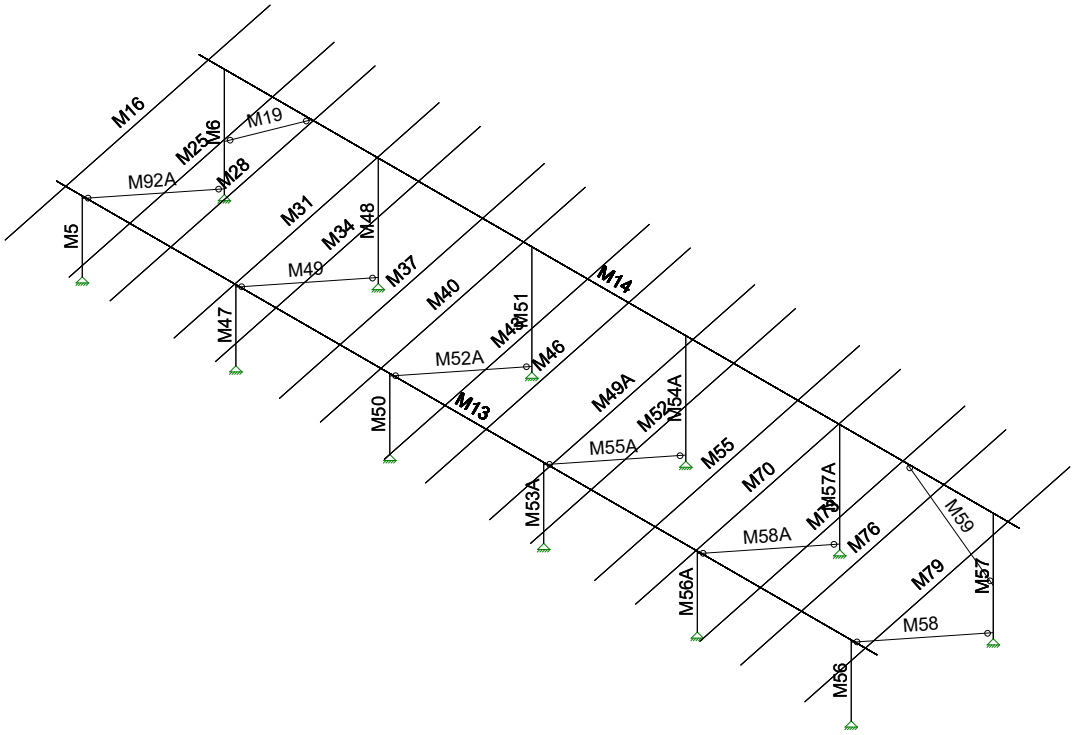

Vector Structural Engineeri...		SK - 3
STB	Ground Mount	Sept 16, 2020 at 1:16 PM
U2716-0255-201		Sunmodo Sunturf C4 v2.r3d

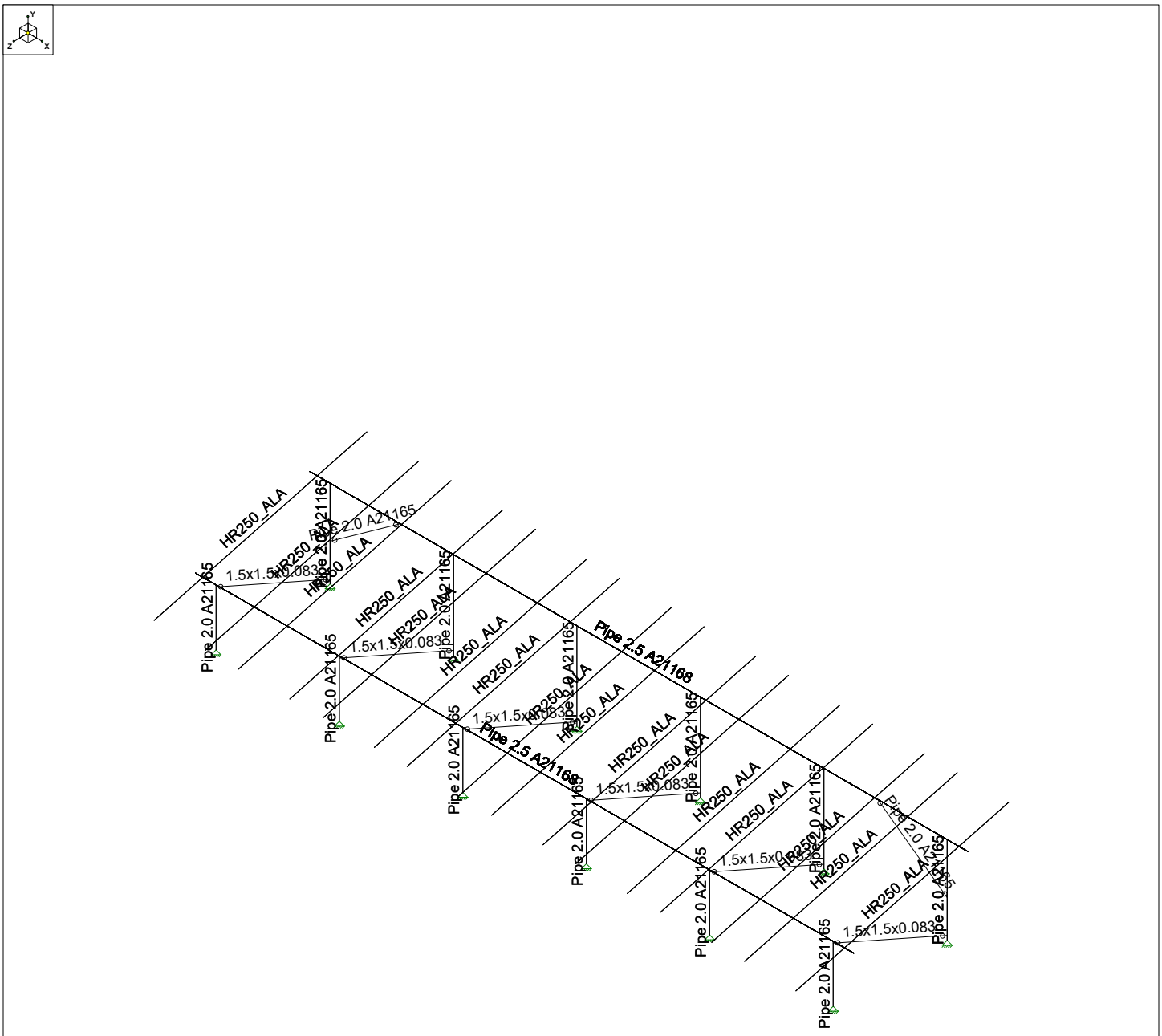

Vector Structural Engineeri...		SK - 4
STB	Ground Mount	Sept 16, 2020 at 1:16 PM
U2716-0255-201		Sunmodo Sunturf C4 v2.r3d

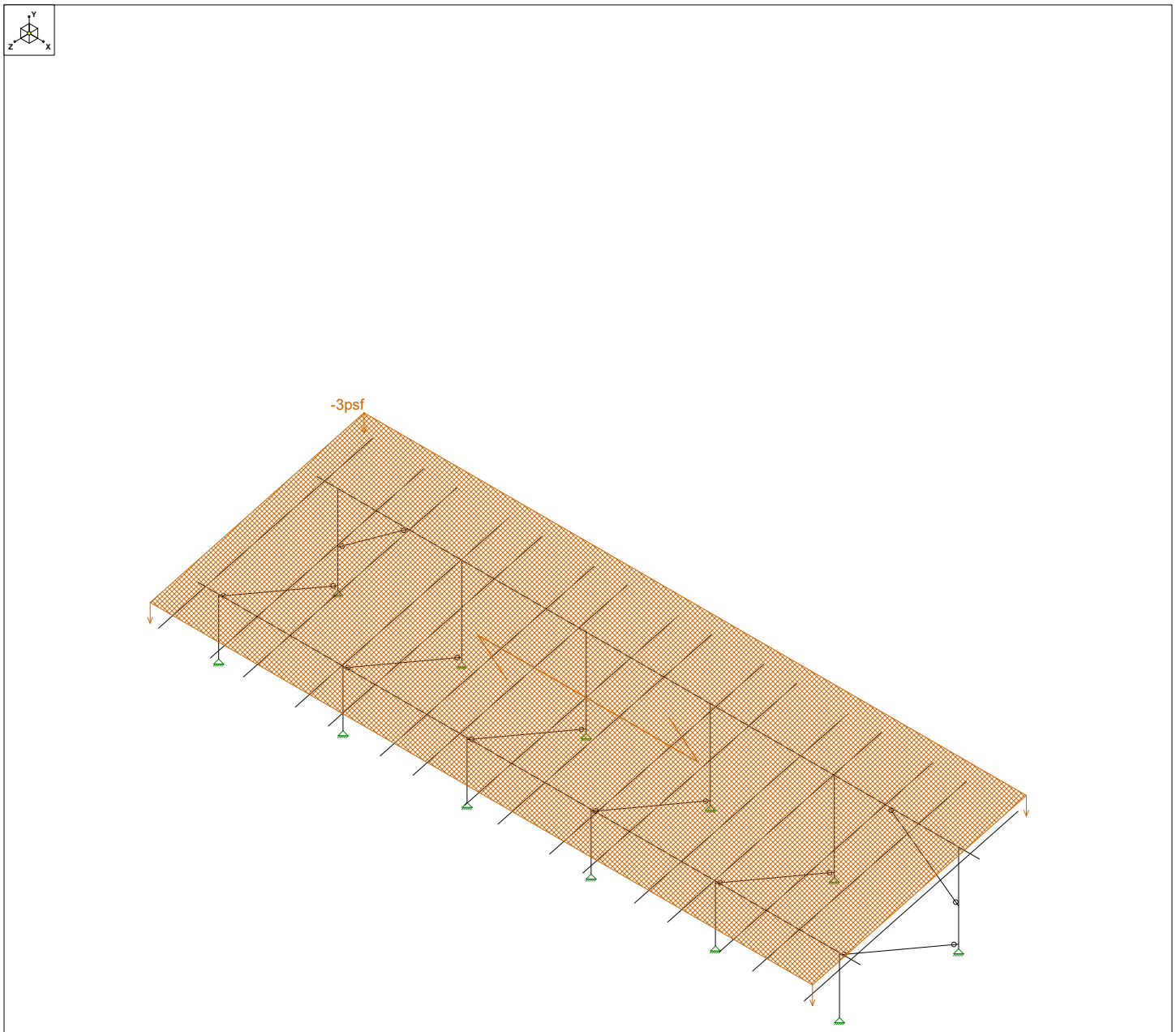

Loads: BLC 2, Solar Panel Weight

Vector Structural Engineeri...		SK - 5
STB	Ground Mount	Sept 15, 2020 at 3:15 PM
U2716-0255-201		Sunmodo Sunturf C4 v2.r3d

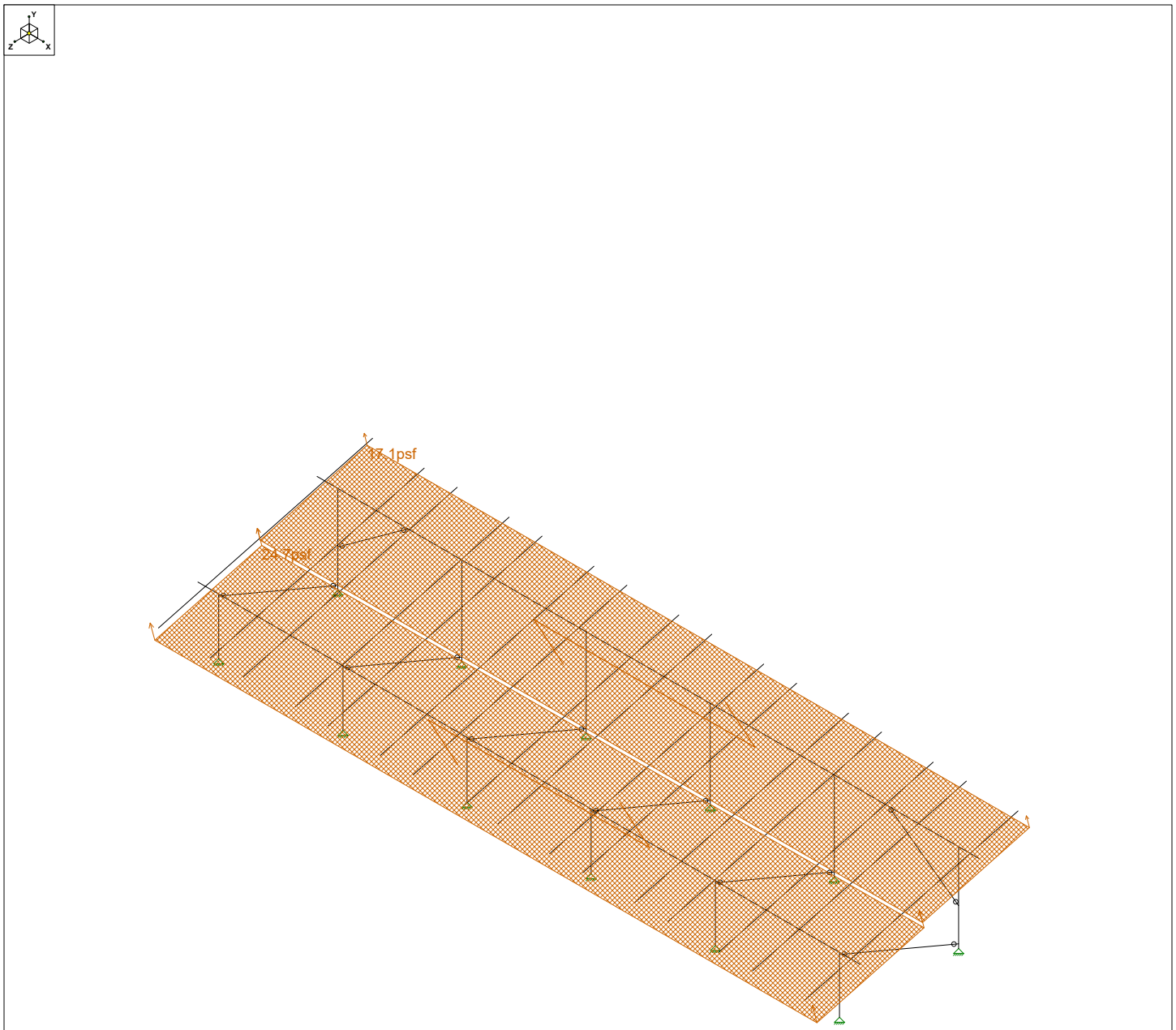

Loads: BLC 4, Wind 1

Vector Structural Engineeri...		SK - 6
STB	Ground Mount	Sept 15, 2020 at 3:15 PM
U2716-0255-201		Sunmodo Sunturf C4 v2.r3d

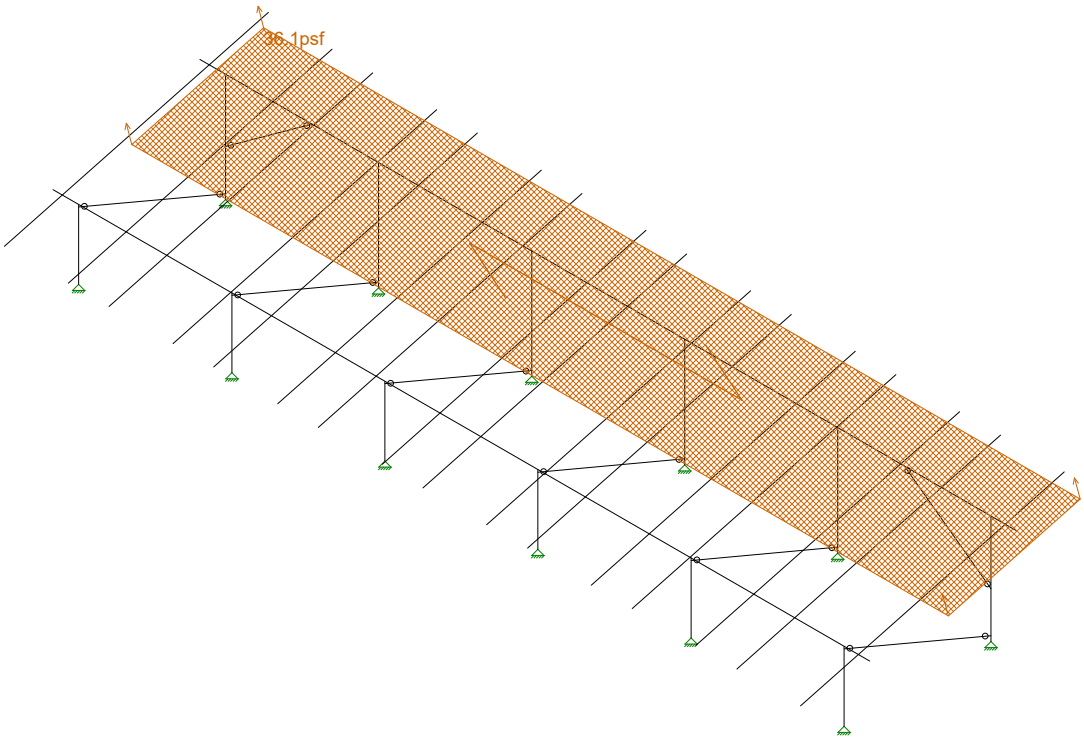

Loads: BLC 5, Wind 2

Vector Structural Engineeri...		SK - 7
STB	Ground Mount	Sept 15, 2020 at 3:16 PM
U2716-0255-201		Sunmodo Sunturf C4 v2.r3d

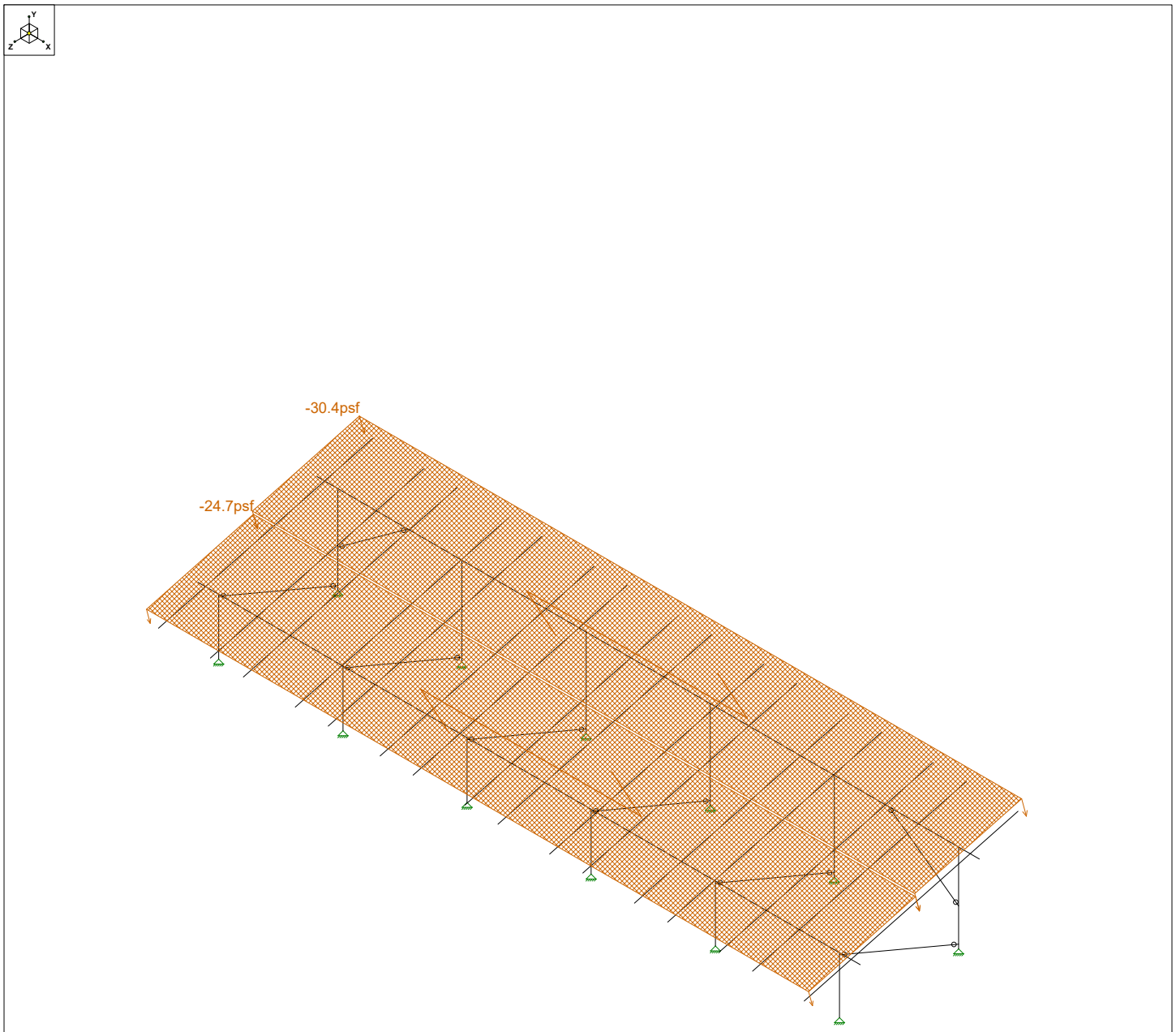

Loads: BLC 6, Wind 3

Vector Structural Engineeri...		SK - 8
STB	Ground Mount	Sept 15, 2020 at 3:16 PM
U2716-0255-201		Sunmodo Sunturf C4 v2.r3d

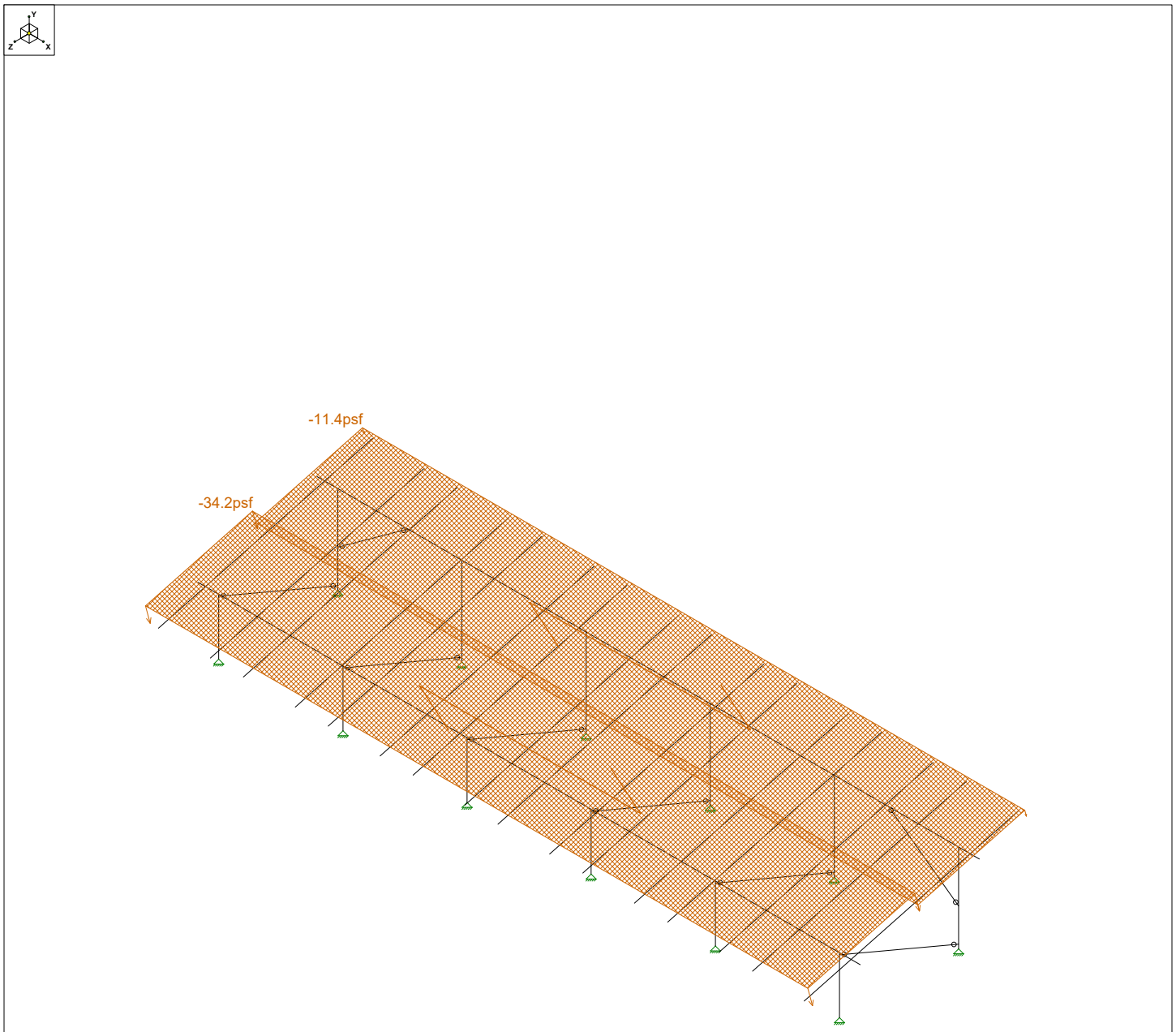

Loads: BLC 7, Wind 4

Vector Structural Engineeri...		SK - 9
STB	Ground Mount	Sept 15, 2020 at 3:16 PM
U2716-0255-201		Sunmodo Sunturf C4 v2.r3d

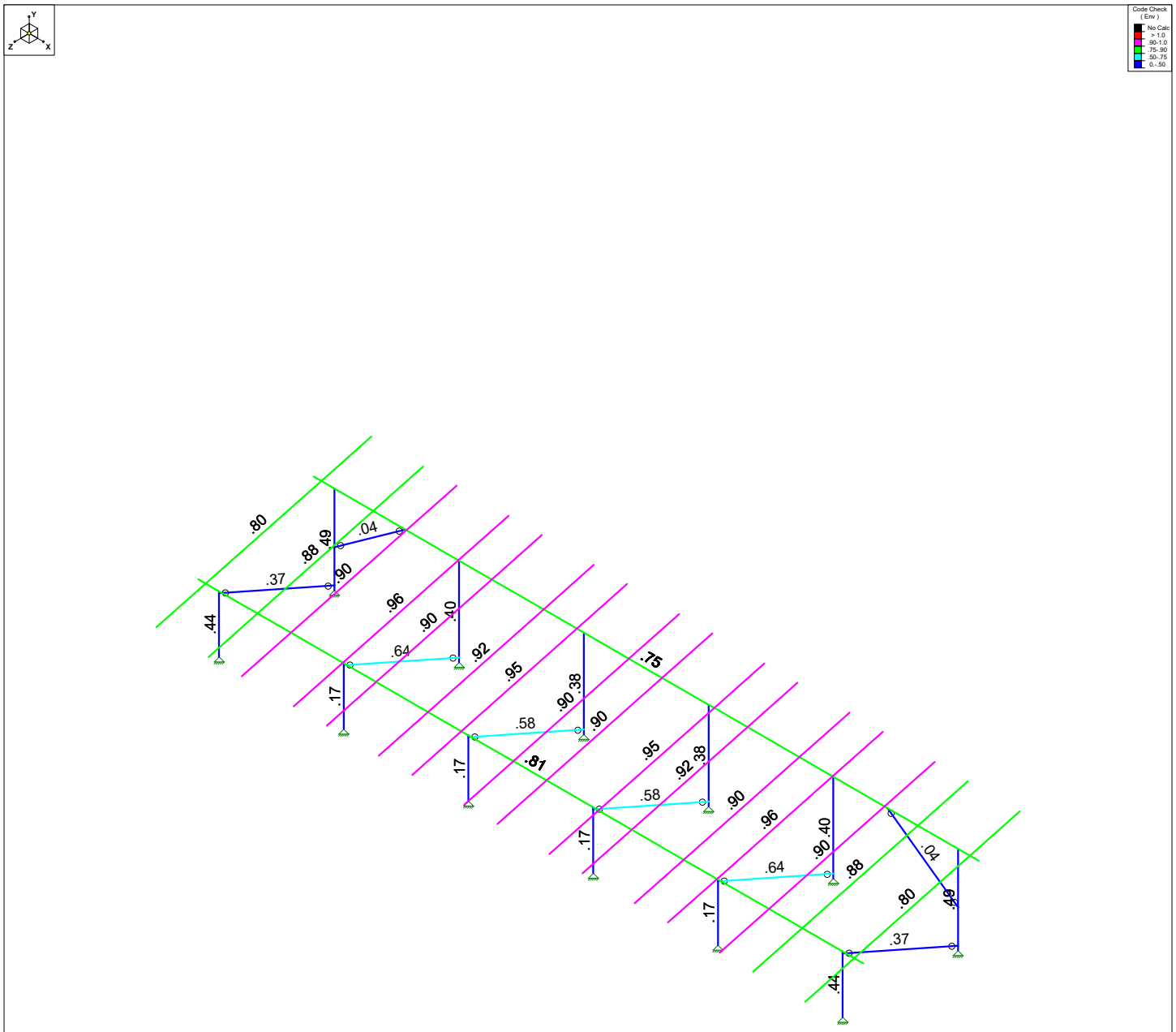

Member Code Checks Displayed (Enveloped)
Envelope Only Solution

Vector Structural Engineeri...		SK - 1
STB	Ground Mount	Sept 16, 2020 at 1:15 PM
U2716-0255-201		Sunmodo Sunturf C4 v2.r3d

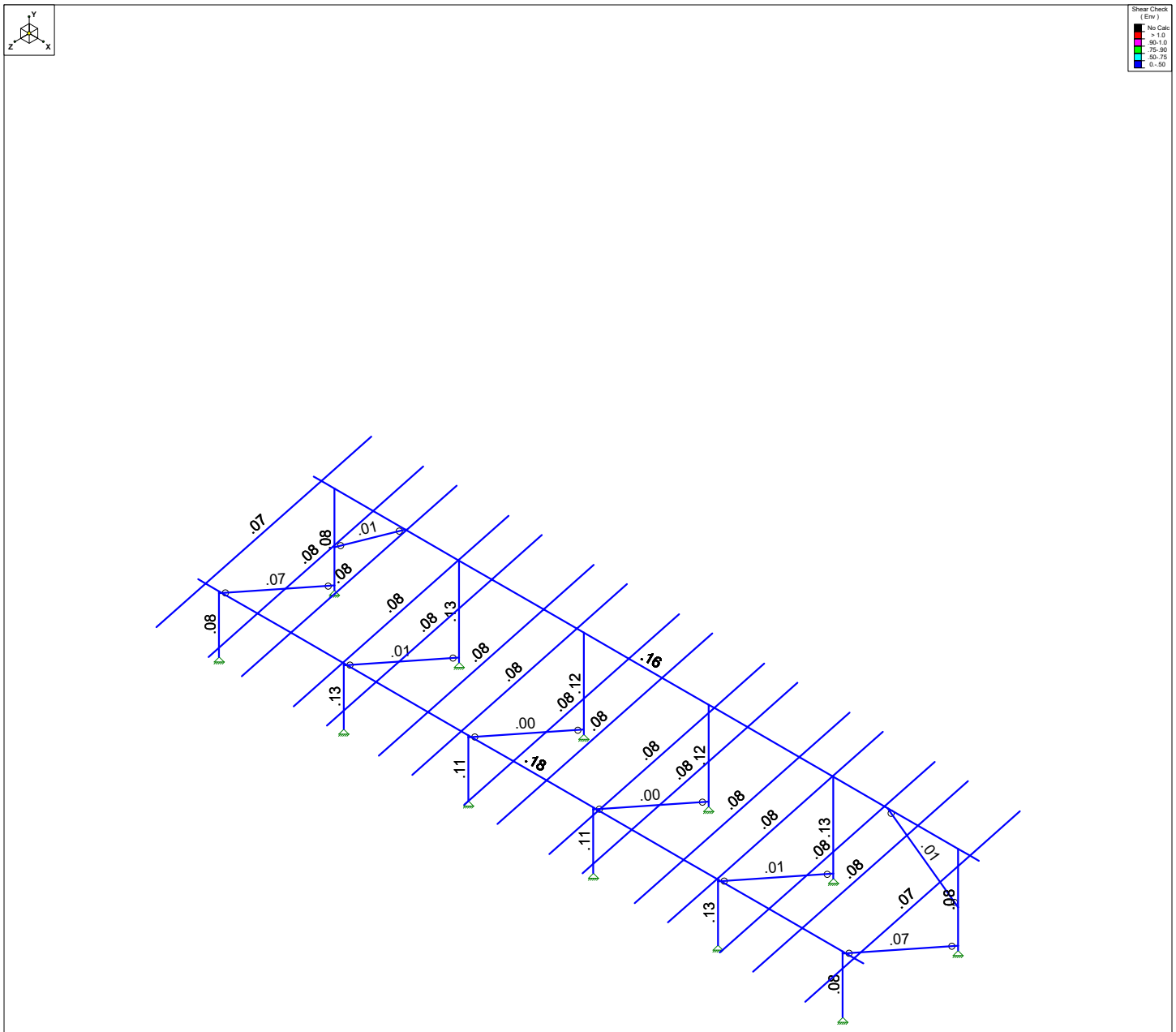

Member Shear Checks Displayed (Enveloped)
Envelope Only Solution

Vector Structural Engineeri...		SK - 2
STB	Ground Mount	Sept 16, 2020 at 1:16 PM
U2716-0255-201		Sunmodo Sunturf C4 v2.r3d

(Global) Model Settings

Display Sections for Member Calcs	5
Max Internal Sections for Member Calcs	97
Include Shear Deformation?	Yes
Increase Nailing Capacity for Wind?	Yes
Include Warping?	Yes
Trans Load Btwn Intersecting Wood Wall?	Yes
Area Load Mesh (in^2)	144
Merge Tolerance (in)	.12
P-Delta Analysis Tolerance	0.50%
Include P-Delta for Walls?	Yes
Automatically Iterate Stiffness for Walls?	Yes
Max Iterations for Wall Stiffness	3
Gravity Acceleration (in/sec^2)	386.4
Wall Mesh Size (in)	24
Eigensolution Convergence Tol. (1.E-)	4
Vertical Axis	Y
Global Member Orientation Plane	XZ
Static Solver	Sparse Accelerated
Dynamic Solver	Accelerated Solver

Hot Rolled Steel Code	AISC 15th(360-16): ASD
Adjust Stiffness?	Yes(Iterative)
RISAConnection Code	AISC 15th(360-16): ASD
Cold Formed Steel Code	AISI S100-16: ASD
Wood Code	AWC NDS-18: ASD
Wood Temperature	< 100F
Concrete Code	ACI 318-14
Masonry Code	None
Aluminum Code	AA ADM1-15: ASD - Building
Stainless Steel Code	AISC 14th(360-10): ASD
Adjust Stiffness?	Yes(Iterative)

Number of Shear Regions	4
Region Spacing Increment (in)	4
Biaxial Column Method	Exact Integration
Parme Beta Factor (PCA)	.65
Concrete Stress Block	Rectangular
Use Cracked Sections?	Yes
Use Cracked Sections Slab?	No
Bad Framing Warnings?	No
Unused Force Warnings?	Yes
Min 1 Bar Diam. Spacing?	No
Concrete Rebar Set	REBAR_SET_ASTMA615
Min % Steel for Column	1
Max % Steel for Column	8

(Global) Model Settings, Continued

Seismic Code	ASCE 7-16
Seismic Base Elevation (in)	15600
Add Base Weight?	Yes
Ct X	.02
Ct Z	.02
T X (sec)	Not Entered
T Z (sec)	Not Entered
R X	3
R Z	3
Ct Exp. X	.75
Ct Exp. Z	.75
SD1	1
SDS	1
S1	1
TL (sec)	5
Risk Cat	I or II
Drift Cat	Other
Om Z	1
Om X	1
Cd Z	4
Cd X	4
Rho Z	1
Rho X	1

Hot Rolled Steel Properties

	Label	E [ksi]	G [ksi]	Nu	Therm (/1E5 F)	Density[k/ft^3]	Yield[psi]	Ry	Fu[psi]	Rt
1	A992	29000	11154	.3	.65	.49	50000	1.1	65000	1.1
2	A36 Gr.36	29000	11154	.3	.65	.49	36000	1.5	58000	1.2
3	A572 Gr.50	29000	11154	.3	.65	.49	50000	1.1	65000	1.1
4	A500 Gr.B R...	29000	11154	.3	.65	.527	42000	1.4	58000	1.3
5	A500 Gr.B Re...	29000	11154	.3	.65	.527	46000	1.4	58000	1.3
6	A53 Gr.B	29000	11154	.3	.65	.49	35000	1.6	60000	1.2
7	A1085	29000	11154	.3	.65	.49	50000	1.4	65000	1.3

Aluminum Properties

	Label	E [ksi]	G [ksi]	Nu	Therm (...	Density[...	Table B.4	kt	Ftu[psi]	Fty[psi]	Fcy[psi]	Fsu[psi]	Ct
1	3003-H14	10100	3787.5	.33	1.3	.173	Table B.4-1	1	19000	16000	13000	12000	141
2	6061-T6	10100	3787.5	.33	1.3	.173	Table B.4-2	1	38000	35000	35000	24000	141
3	6063-T5	10100	3787.5	.33	1.3	.173	Table B.4-2	1	22000	16000	16000	13000	141
4	6063-T6	10100	3787.5	.33	1.3	.173	Table B.4-2	1	30000	25000	25000	19000	141
5	5052-H34	10200	3787.5	.33	1.3	.173	Table B.4-1	1	34000	26000	24000	20000	141
6	6061-T6 W	10100	3787.5	.33	1.3	.173	Table B.4-1	1	24000	15000	15000	15000	141
7	6005-T5	10100	3787.5	.33	1.3	.173	Table B.4-1	1	38000	35000	35000	24000	141

Hot Rolled Steel Section Sets

	Label	Shape	Type	Design List	Material	Design R...	A [in2]	Iyy [in4]	Izz [in4]	J [in4]
1	Post	Pipe 2.0 A21165	Column	Pipe	A572 Gr.50	Typical	.776	.499	.499	.998
2	Cross Beam	Pipe 2.5 A21168	Beam	Wide Flange	A572 Gr.50	Typical	.947	.907	.907	1.814
3	Diagonal Brace	1.5x1.5x0.083	HBrace	SquareTube	A572 Gr.50	Typical	.47	.158	.158	.236

Aluminum Section Sets

	Label	Shape	Type	Design List	Material	Design R...	A [in2]	Iyy [in4]	Izz [in4]	J [in4]
1	AL Posts	2.375ODX0.188	Column	Pipe	6005-T5	Typical	1.29	.778	.778	1.54
2	AL Brace	RT1.5x2x0.15625	VBrace	Rectangular Tubes	6005-T5	Typical	.996	.327	.524	.602
3	AL Rails	HR250 ALA	Beam	Rectangular Tubes	6005-T5	Typical	.723	.095	.486	.261
4	AL Cross Beam	Cross Rail	Beam	Rectangular Tubes	6005-T5	Typical	1.909	1.97	4.366	4.017

Member Area Loads (BLC 2 : Solar Panel Weight)

	Joint A	Joint B	Joint C	Joint D	Direction	Distribution	Magnitude[psf]
1	N197	N200	N199	N196	Y	A-B	-3

Member Area Loads (BLC 3 : Roof Live/Snow)

	Joint A	Joint B	Joint C	Joint D	Direction	Distribution	Magnitude[psf]
1	N197	N200	N199	N196	PY	A-B	0

Member Area Loads (BLC 4 : Wind 1)

	Joint A	Joint B	Joint C	Joint D	Direction	Distribution	Magnitude[psf]
1	N197	N119B	N120B	N200	Perp	B-C	17.1
2	N119B	N196	N199	N120B	Perp	B-C	24.7

Member Area Loads (BLC 5 : Wind 2)

	Joint A	Joint B	Joint C	Joint D	Direction	Distribution	Magnitude[psf]
1	N197	N119B	N120B	N200	Perp	B-C	36.1
2	N119B	N196	N199	N120B	Perp	B-C	0

Member Area Loads (BLC 6 : Wind 3)

	Joint A	Joint B	Joint C	Joint D	Direction	Distribution	Magnitude[psf]
1	N197	N119B	N120B	N200	Perp	B-C	-30.4
2	N119B	N196	N199	N120B	Perp	B-C	-24.7

Member Area Loads (BLC 7 : Wind 4)

	Joint A	Joint B	Joint C	Joint D	Direction	Distribution	Magnitude[psf]
1	N197	N119B	N120B	N200	Perp	B-C	-11.4
2	N119B	N196	N199	N120B	Perp	B-C	-34.2

Basic Load Cases

	BLC Description	Category	X Gravity	Y Gravity	Z Gravity	Joint	Point	Distributed	Area(M...	Surface...
1	Self Weight	DL		-1.05						
2	Solar Panel Weight	DL							1	
3	Roof Live/Snow	RLL							1	
4	Wind 1	OL1							2	
5	Wind 2	OL2							2	
6	Wind 3	OL3							2	
7	Wind 4	OL4							2	
8	BLC 2 Transient Area ...	None						44		
9	BLC 3 Transient Area ...	None								
10	BLC 4 Transient Area ...	None						192		
11	BLC 5 Transient Area ...	None						96		
12	BLC 6 Transient Area ...	None						192		
13	BLC 7 Transient Area ...	None						192		

Load Combinations

	Description	S...	PD...	SRSS	BLC	Fa...	BLC	Fa...	BLC	Fa...	B...	Fa...	B...	Fa...	B...	Fa...	B...	Fa...	B...	Fa...	B...	Fa...	B...	Fa...
1	ASD Loads		Y																					
2	1.0 D	Yes	Y		DL	1																		
3	1.0 D + 1.0 S	Yes	Y		DL	1	RLL	1																
4	1.0 D + 0.6 W1	Yes	Y		DL	1	RLL		OL1	.6														
5	1.0 D + 0.6 W2	Yes	Y		DL	1	RLL		OL2	.6														
6	1.0 D + 0.6 W3	Yes	Y		DL	1	RLL		OL3	.6														
7	1.0 D + 0.6 W4	Yes	Y		DL	1	RLL		OL4	.6														
8	1.0 D + 0.45 W1 + 0....	Yes	Y		DL	1	RLL	.75	OL1	.45														
9	1.0 D + 0.45 W2 + 0....	Yes	Y		DL	1	RLL	.75	OL2	.45														
10	1.0 D + 0.45 W3 + 0....	Yes	Y		DL	1	RLL	.75	OL3	.45														
11	1.0 D + 0.45 W4 + 0....	Yes	Y		DL	1	RLL	.75	OL4	.45														
12	0.6 D + 0.6 W1	Yes	Y		DL	.6	RLL		OL1	.6														
13	0.6 D + 0.6 W2	Yes	Y		DL	.6	RLL		OL2	.6														
14	0.6 D + 0.6 W3	Yes	Y		DL	.6	RLL		OL3	.6														
15	0.6 D + 0.6 W4	Yes	Y		DL	.6	RLL		OL4	.6														
16			Y																					
17	LRFD Loads		Y																					
18	1.4 D		Y		DL	1.4	RLL																	
19	1.2 D + 1.6 S + 0.5 W1		Y		DL	1.2	RLL	1.6	OL1	.5														
20	1.2 D + 1.6 S + 0.5 W2		Y		DL	1.2	RLL	1.6	OL2	.5														
21	1.2 D + 1.6 S + 0.5 W3		Y		DL	1.2	RLL	1.6	OL3	.5														
22	1.2 D + 1.6 S + 0.5 W4		Y		DL	1.2	RLL	1.6	OL4	.5														
23	1.2 D + 1.0 W1		Y		DL	1.2	RLL		OL1	1														
24	1.2 D + 1.0 W2		Y		DL	1.2	RLL		OL2	1														
25	1.2 D + 1.0 W3		Y		DL	1.2	RLL		OL3	1														
26	1.2 D + 1.0 W4		Y		DL	1.2	RLL		OL4	1														
27	0.9 D + 1.0 W1		Y		DL	.9	RLL		OL1	1														
28	0.9 D + 1.0 W2		Y		DL	.9	RLL		OL2	1														
29	0.9 D + 1.0 W3		Y		DL	.9	RLL		OL3	1														
30	0.9 D + 1.0 W4		Y		DL	.9	RLL		OL4	1														

Envelope Joint Reactions

	Joint		X [lb]	LC	Y [lb]	LC	Z [lb]	LC	MX [lb-ft]	LC	MY [lb...	LC	MZ [lb-ft]	LC
1	N2	max	116.896	7	1074.978	7	21.781	4	0	15	0	15	0	15
2		min	-60.341	12	-440.865	12	-30.232	6	0	2	0	2	0	2
3	N1	max	184.886	6	1581.236	6	478.917	14	0	15	0	15	0	15
4		min	-169.3...	13	-1261.146	13	-363.0...	4	0	2	0	2	0	2
5	N115	max	169.725	13	1580.808	6	478.882	14	0	15	0	15	0	15
6		min	-185.1...	6	-1260.847	13	-363.0...	4	0	2	0	2	0	2
7	N116	max	60.397	12	1075.091	7	21.779	4	0	15	0	15	0	15
8		min	-116.9...	7	-441.257	12	-30.232	6	0	2	0	2	0	2
9	N99	max	-.343	15	2383.891	6	854.81	6	0	15	0	15	0	15
10		min	-2.266	5	-1895.499	13	-644.2...	12	0	2	0	2	0	2
11	N100	max	7.885	12	1729.512	7	29.942	4	0	15	0	15	0	15
12		min	-16.086	7	-703.777	12	-43.097	6	0	2	0	2	0	2
13	N105A	max	3.647	13	2346.411	6	779.244	6	0	15	0	15	0	15
14		min	-3.407	6	-1905.212	13	-589.1...	4	0	2	0	2	0	2
15	N106A	max	1.588	12	1667.844	7	30.154	4	0	15	0	15	0	15
16		min	-3.116	7	-687.237	12	-43.058	6	0	2	0	2	0	2
17	N111A	max	3.46	6	2346.434	6	779.222	6	0	15	0	15	0	15
18		min	-3.818	13	-1905.267	13	-589.1...	4	0	2	0	2	0	2
19	N112A	max	3.162	7	1667.868	7	30.154	4	0	15	0	15	0	15
20		min	-1.61	12	-687.24	12	-43.058	6	0	2	0	2	0	2
21	N117A	max	2.159	5	2383.813	6	854.88	6	0	15	0	15	0	15

Envelope Joint Reactions (Continued)

	Joint		X [lb]	LC	Y [lb]	LC	Z [lb]	LC	MX [lb-ft]	LC	MY [lb...	LC	MZ [lb-ft]	LC
22		min	.368	15	-1895.298	13	-644.3...	12	0	2	0	2	0	2
23	N118A	max	16.173	7	1729.657	7	29.943	4	0	15	0	15	0	15
24		min	-7.947	12	-703.914	12	-43.099	6	0	2	0	2	0	2
25	Totals:	max	.001	13	18656.766	6	3993.0...	6						
26		min	-.002	6	-9051.952	12	-3029....	12						

Envelope AISC 15th(360-16): ASD Steel Code Checks

	Member	Shape	Code Check	Loc[in]	LC	Shear ...	Loc[in]	Dir	LC	Pnc/om [...	Pnt/om [lb]	Mnyy/om...	Mnzz/om...	Cb	Eqn
1	M5	Pipe 2.0 A2...	.437	54.71	7	.081	53.57		6	16532.882	23232.186	1397.505	1397.505	1....	H1-1b
2	M6	Pipe 2.0 A2...	.486	35.304	6	.078	0		6	10273.864	23232.186	1397.505	1397.505	1....	H1-1b
3	M13	Pipe 2.5 A2...	.815	500	7	.181	380		7	14032.946	28358.413	2081.747	2081.747	1	H1-1b
4	M14	Pipe 2.5 A2...	.753	380	6	.161	380		6	14032.946	28358.413	2081.747	2081.747	1	H1-1b
5	M19	Pipe 2.0 A2...	.037	83.792	6	.011	83.792		5	10459.974	23232.186	1397.505	1397.505	1....	H1-1b*
6	M92A	1.5x1.5x0.083	.369	63.197	6	.071	0	y	6	1612.755	14085.15	624.421	624.421	1....	H1-1a
7	M56	Pipe 2.0 A2...	.437	54.71	7	.081	53.57		6	16532.882	23232.186	1397.505	1397.505	1....	H1-1b
8	M57	Pipe 2.0 A2...	.487	35.304	6	.078	0		6	10273.864	23232.186	1397.505	1397.505	1....	H1-1b
9	M58	1.5x1.5x0.083	.369	63.197	6	.071	121....	y	6	1612.755	14085.15	624.421	624.421	1....	H1-1a
10	M59	Pipe 2.0 A2...	.037	83.589	6	.011	83.589		5	10500.398	23232.186	1397.505	1397.505	1....	H1-1b*
11	M47	Pipe 2.0 A2...	.172	53	7	.125	53.57		6	16532.882	23232.186	1397.505	1397.505	1....	H1-1b
12	M48	Pipe 2.0 A2...	.399	3.53	6	.128	0		6	10273.864	23232.186	1397.505	1397.505	1....	H1-1a
13	M49	1.5x1.5x0.083	.639	63.197	6	.006	0	y	7	1612.755	14085.15	624.421	624.421	1....	H1-1a
14	M50	Pipe 2.0 A2...	.165	53	6	.113	53.57		6	16532.882	23232.186	1397.505	1397.505	1....	H1-1b
15	M51	Pipe 2.0 A2...	.380	3.53	6	.117	0		6	10273.864	23232.186	1397.505	1397.505	1....	H1-1a
16	M52A	1.5x1.5x0.083	.584	63.197	6	.003	0	y	5	1612.755	14085.15	624.421	624.421	1....	H1-1a
17	M53A	Pipe 2.0 A2...	.165	53	6	.113	53.57		6	16532.882	23232.186	1397.505	1397.505	1....	H1-1b
18	M54A	Pipe 2.0 A2...	.380	3.53	6	.117	0		6	10273.864	23232.186	1397.505	1397.505	1....	H1-1a
19	M55A	1.5x1.5x0.083	.584	63.197	6	.003	0	y	5	1612.755	14085.15	624.421	624.421	1....	H1-1a
20	M56A	Pipe 2.0 A2...	.172	53	7	.125	53.57		6	16532.882	23232.186	1397.505	1397.505	1....	H1-1b
21	M57A	Pipe 2.0 A2...	.399	3.53	6	.128	0		6	10273.864	23232.186	1397.505	1397.505	1....	H1-1a
22	M58A	1.5x1.5x0.083	.639	63.197	6	.006	0	y	7	1612.755	14085.15	624.421	624.421	1....	H1-1a

Envelope AA ADM1-15: ASD - Building Aluminum Code Checks

	Member	Shape	Code C...	Loc[in]	LC	Shear ...	Loc[in]	Dir	LC	Pnc/O...	Pnt/Om...	Mny/O...	Mnz/O...	Vny/O...	Vnz/O...	Cb	Eqn
1	M16	HR250_A...	.796	51.271	7	.067	51.271	y	7	1889.879	14089....	309.506	670.115	4940.308	1617.231	3....	H.1-1
2	M25	HR250_A...	.876	51.271	7	.084	51.271	y	7	1889.879	14089....	309.506	656.751	4940.308	1617.231	2....	H.1-1
3	M28	HR250_A...	.903	49.042	7	.082	51.271	y	7	3207.381	14089....	309.506	687.273	4940.308	1617.231	2....	H.1-1
4	M31	HR250_A...	.963	162.7...	13	.076	51.271	y	7	1889.879	14089....	309.506	687.273	4940.308	1617.231	2....	H.1-1
5	M34	HR250_A...	.903	49.042	7	.082	51.271	y	7	3207.381	14089....	309.506	687.273	4940.308	1617.231	2....	H.1-1
6	M37	HR250_A...	.920	51.271	7	.080	51.271	y	7	1889.879	14089....	309.506	666.989	4940.308	1617.231	2....	H.1-1
7	M40	HR250_A...	.953	162.7...	13	.078	51.271	y	7	1889.879	14089....	309.506	687.273	4940.308	1617.231	2....	H.1-1
8	M43	HR250_A...	.903	49.042	7	.082	51.271	y	7	3207.381	14089....	309.506	687.273	4940.308	1617.231	2....	H.1-1
9	M46	HR250_A...	.903	49.042	7	.082	51.271	y	7	3207.381	14089....	309.506	687.273	4940.308	1617.231	2....	H.1-1
10	M49A	HR250_A...	.954	162.7...	13	.078	51.271	y	7	1889.879	14089....	309.506	687.273	4940.308	1617.231	2....	H.1-1
11	M52	HR250_A...	.921	51.271	7	.080	51.271	y	7	1889.879	14089....	309.506	666.989	4940.308	1617.231	2....	H.1-1
12	M55	HR250_A...	.903	49.042	7	.082	51.271	y	7	3207.381	14089....	309.506	687.273	4940.308	1617.231	2....	H.1-1
13	M70	HR250_A...	.963	162.7...	13	.076	51.271	y	7	1889.879	14089....	309.506	687.273	4940.308	1617.231	2....	H.1-1
14	M73	HR250_A...	.903	49.042	7	.082	51.271	y	7	3207.381	14089....	309.506	687.273	4940.308	1617.231	2....	H.1-1
15	M76	HR250_A...	.877	51.271	7	.084	51.271	y	7	1889.879	14089....	309.506	656.88	4940.308	1617.231	2....	H.1-1
16	M79	HR250_A...	.797	51.271	7	.067	51.271	y	7	1889.879	14089....	309.506	670.202	4940.308	1617.231	3....	H.1-1