SunModo PV Rack Mounting System

UL2703 Compliant

Please read carefully before installing

Product is tested to and recognized to UL 2703 standards for safety grounding and bonding equipment and meets UL 1703 fire standards.

SunModo PV Rack Mount System can be used to mount photovoltaic (PV) panels in a wide variety of locations. All installations shall be in accordance with NEC requirements in the USA. The self-bonding system is for use with PV modules that have a maximum series fuse rating of 30A. Mechanical design loads per UL 2703: Downward Pressure: 33.42 psf (1600.2 Pa), Upward Pressure: 33.42 psf (1600.2 Pa), Down-Slope: 5 psf (239.4 Pa). Mechanical test loads per LTR AE 2012: Downward Pressure: 50.125 psf (2400 Pa), Upward Pressure: 50.125 psf (2400 Pa).

TABLE OF CONTENTS

Installer Responsibility 4
Safety 4
SunModo Racking Self-Bonding System 5
SMR Tilt-Up System Components 6
List of Compliant PV Modules 11
Fault Current Path Diagram 15
Tools Required for Installation 16
Torque Values 17
Lag Pull-Out Capacities: 18
SMR Tilt-Up System Overview 19
Alternative Construction 19
Penetration Sealing Options: 20
Sealant System 20
SMR Tilt-Up General Assembly 21
- SMR Tilt-Up Tilt Angle Selection 22
- Roof Attachment 23
- Sealant Installation 23
- Gasket Compression 23
- Rail to L-Foot Connection 24
- Front Rail Attachment 24
- Rear Rail Attachment 24

Rail Splice Installation Instructions: 25
- SMR Splice 25

SMR Splice to First Rail 25
SMR Splice to Second Rail 25
Thermal Break Installation Instructions: 26
SMR Splice 26
Gap Between Rails 26
Bonding 26
Panel Clamp Installation Instructions: 27
SMR End Clamp 27
End Clamp Location 27
SMR Mid Clamp 28
SMR Mid Clamp Attachment 28
Additional Attachments: 29
Ground Wire Attachment 29
Ground Lug Installation 29
Ground Lug Alternate Installation 29
Top Mount Cable Clip Installation 30
Top Mount Cable Clip Installation 30
Side Mount Cable Clip Installation 30
Rail End Cap Attachment 31
Microinverter Mounting Kit Installation 31
UL 2703 Label Placement 31

SunModo Corporation:
Vancouver, Washington
www.SunModo.com
Ph: 360-844-0048
info@sunmodo.com

Document Number D10061-V008
©2021 – SunModo Corp.

Installer Responsibility

Before ordering and installing materials, all system layout dimensions should be confirmed by field measurements. SunModo reserves the right to alter, without notice, any details, proposals or plans. Any inquiries that you may have concerning installation of the PV system should be directed to your SunModo Sales representative. Consult SunModo Sales for any information not contained in this manual. This manual is intended to be used as a guide when installing SunModo's racking system. It is the responsibility of the installer to ensure the safe installation of this product as outline herein.

- Installer shall employ only SunModo products detail herein. The use of non SunModo components can void the warranty and cancel the letters of UL compliance.
- Installer shall guarantee that screws and anchors have adequate pullout strength and shear capacities.
- Installer shall adhere to the torque values specified in this Instruction Manual.
- Installer shall use anti-seize compound, such as Permatex anti-seize, lubricant is recommended for all threaded parts.
- Installer is responsible to install solar panels over a Fire Resistant roof covering rated for the application.
- Installer is responsible to determine that the roof, its rafters, connections, and other architectural support components can sustain the array under all code level loading conditions.
- Installer shall adhere to all relevant local or national building codes. This takes account of those that supplant this document's requirements.
- Installer shall guarantee the safe placement of all electrical details of the PV array.
- Installer shall comply with all applicable local, state and national building codes, including periodic re-inspection of the installation for loose components, loose fasteners and any corrosion, such that if found, the affected components are to be immediately replaced.
- Installer to ensure the structural support members or footings for mounting the array can withstand all code loading conditions. Consult with licensed professional engineer for the appropriate loading conditions.
- Installer to follow all regional safety requirements during installation.
- This racking system may be used to ground and/or mount a PV module complying with UL 1703 only when the specific module has been evaluated for grounding and/or mounting in compliance with the included instructions.
- Installer shall ensure bare copper grounding wire does not contact aluminum and zinc-plated steel components to prevent risk of galvanic corrosion.
- If loose components or loose fasteners are found during periodic inspection, re-tighten immediately. If corrosion is found, replace affected components immediately.

Safety

Review relevant OSHA and other safety standards before following these instructions. The installation of solar PV systems is a dangerous procedure and should be supervised by trained and experienced personnel.

It is not possible for SunModo to be aware of all the possible job site situations that could cause an unsafe condition to exist. The installer of the ground system is responsible for reading these instructions and determining the safest way to install the ground system. These instructions are provided only as a guide to show a knowledgeable, trained erector the correct part placement one to another. If following any of the installation steps would endanger a worker, the erector should stop work and decide upon a corrective action.

SunModo Racking Self-Bonding System

SunModo's SMR system meets the stringent requirements of UL 2703 and CSA C22.2 No. 61730-2 which covers rack mounting systems, mounting grounding/bonding components, and clamping/retention devices for photovoltaic (PV) modules. The SMR system is intended for, but not limited to, PV module installations on residential roof tops, commercial buildings and freestanding ground mount structures.

The SMR system components are designed in accordance with the National Electrical Code, ANSI/NFPA 70 and Model Building Codes. These code requirements cover rack mounting systems and clamping devices intended for use with PV module systems with a maximum system voltage of 1000V.

The patented SMR self-bonding system is for use with PV modules that have a maximum series fuse rating of 30A. This means the maximum number of PV modules in the SMR system is limited by the system voltage, so if a system has multiple inverters, the SunModo racking system can theoretically go on forever.

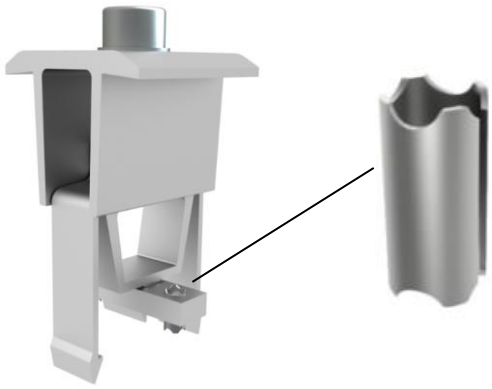

Mid Clamp with Bonding Pins

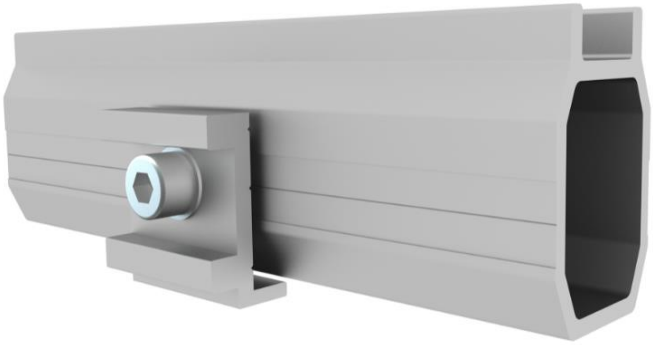

Structural Rail Splice with Bonding Pins

SMR Tilt-Up System Components

	Nano Rafter Mount	K50053-BK1 With lag screw
	Nano Deck Mount	K50053-BK3 With Self-tapping screws
	Aluminum L-Foot available in clear and black. M8 Flange Nut and Bolt included.	K10066-064 Standard L-Foot Kit K10096-XXX Tall L-Foot Kit
	3” Tall Open L-Foot Hardware not included	A50223-XX2
	Direct Attach L-Foot Kit (Metal Purlin Option) ***Self-tapping screws are not provided***	K10004-XXX

	Top Mount Standoff available 4”, 6” and 8” heights	A20055-004 A20055-006 A20055-008
	Side Mount Standoff available 5”, 7” and 9” heights	A20056-005 A20056-007 A20056-009
	Tilt-Up Legs: 8” (front leg), and 14” or 25” (rear leg). Last 3 digits denote rail length. A 120” full length Tilt-Up Rail is available for on-site cutting.	A20276-008 A20276-014 A20276-025
	Tilt-Up Kit with hardware is available in standard lengths	K10284-XXX

	SMR End Clamp	K10418-XXX
	SMR Mid Clamp	K10417-XXX For single-use only
	Shared Rail SMR End Clamp	K10420-XXX
	Shared Rail SMR Mid Clamp	K10419-XXX For single-use only

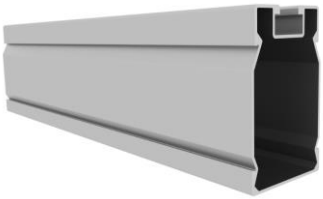	SMR100 Rail	A20422-XXX
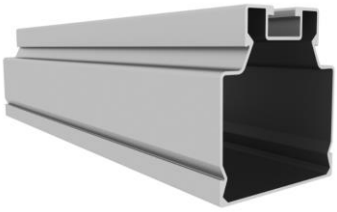	SMR200 Rail	A20453-XXX
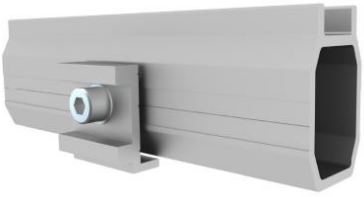	SMR100 Structural Rail Splice	K10421-XXX For single-use only
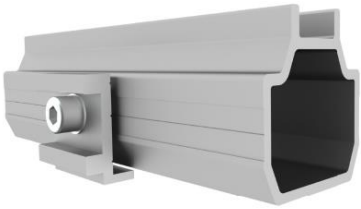	SMR200 Structural Rail Splice	K10427-XXX For single-use only
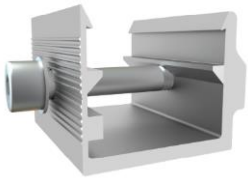	SMR100 L-Foot Adaptor	K10433-XXX
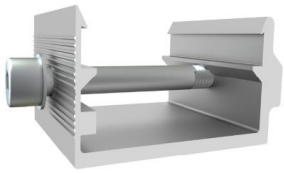	SMR200 L-Foot Adaptor	K10434-XXX

	Top Mount Cable Clip	A20162-001
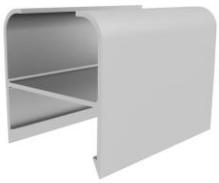	Top Mount Cable Clip	A20408-XXX
	Side Mount Cable Clip	A20427-XXX SMR100 A20434-XXX SMR200
	Rail End Cover	A20440-XX1 SMR100 A20440-XX2 SMR200
	Microinverter Mounting Kit	K50052-001
	Grounding Lug Kit May be repositioned until torqued to final value.	K10179-XXX For single-use only

List of Compliant PV Modules

UL 2703 Qualified Modules for use with SunModo PV Racking Systems

Evaluated PV Modules	
Module manufacturer	**Model numbers**
Boviet Solar	BVM6610M-250, BVM6610M-255, BVM6610M-260, BVM6610M-265, BVM6610M-270, BVM6610M-275, BVM6610M-280, BVM6610-305, BVM6610-310, BVM6610-315, BVM6610-320, BVM6612M-325, BVM6612M-330, BVM6612M-335, BVM6612M-340, BVM6612M-345, BVM6612M-350, BVM6610P-250, BVM6610P-255, BVM6610P-260, BVM6610P-265, BVM6610P-270, BVM6610P-275, BVM6612P-310, BVM6612P-315, BVM6612P-320, BVM6612P-325, BVM6612P-330, BVM6612P-335, BVM6612P-340, BVM6612P-345, BVM6612P-350, BVM6612P-355
C-Sun	CSUN290-72P, CSUN295-72P, CSUN300-72P, CSUN305-72P, CSUN310-72P, CSUN285-72M, CSUN290-72M, CSUN295-72M, CSUN300-72M, CSUN305-72M, CSUN310-72M, CSUN315-72M, CSUN320-72M, CSUN235-60M, CSUN240-60M, CSUN245-60M, CSUN240-60P, CSUN245-60P, CSUN250-60P, CSUN255-60P, CSUN260-60P
Canadian Solar	CS6X-300P, CS6X-305P, CS6X-310P, CS6X-315P, CS6X-320P, CS6P-255P, CS6P-260P, CS6P-265P, CS6P-260M, CS6P-265M, CS6V-210P, CS6V-215P, CS6V-220M, CS6V-225M, CS6K-265M, CS6K-270M, CS6K-290MS, CS6K-295MS, CS6K-300MS, CS6K-305MS
ET Solar	ET-P672300WW, ET-P672305WW, ET-P672310WW, ET-P672315WW
Hansol	HS300SE-V01, HS305SE-V01, HS310SE-V01, HS315SE-V01, HS320SE-V01, HS325SE-V01, HS330SE-V01, HS335SE-V01, HS340SE-V01
Hanwha Q Cells	Q.PEAK DUO-L-G4.2 365W, Q.PEAK DUO-L-G4.2 370W, Q.PEAK DUO L-G5.2 380W, Q.PEAK DUO L-G5.2 385W, Q.PEAK DUO L-G5.2 390W, Q.PEAK DUO L-G5.2 395W, Q.PEAK DUO-G5-BLK 305W, Q.PEAK DUO-G5-BLK 310W, Q.PEAK DUO-G5-BLK 315W, Q.PEAK DUO-G5-BLK 320W, Q.PEAK DUO-G5 315W, Q.PEAK DUO-G5 320W, Q.PEAK DUO-G5 325W, Q.PEAK DUO-G5 330W, Q.PEAK DUO-G5 305W, Q.PEAK DUO-G5 310W, Q.PEAK DUO-G5 315W, Q.PEAK DUO-G5 320W, Q.PRO L-G2 305, Q.PRO L-G2 310, Q.PRO L-G2 315
Hareon	HR-280P-24/Ba, HR-285P-24/Ba, HR-290P-24/Ba, HR-295P-24/Ba, HR-300P-24/Ba, HR-305P-24/Ba, HR-310P-24/Ba
Heliene	72P-285, 72P-290, 72P-295, 72P-300, 72P-310, 72P-320, 72P-325, 72P-330, 72P-335, 72P-340, 72M-345, 72M-350, 72M-360, 72M-365, 72M-370, 72M-BLK-345, 72M-BLK-350, 72M-BLK-360, 72M-BLK-365, 72M-BLK-370
Hyundai	HiS-M300TI, HiS-M305TI, HiS-M310TI, HiS-M315TI, HiS-M320TI, HiS-M325TI HiS-S325TI, HiS-S330TI, HiS-S335TI, HiS-S340TI, HiS-S345TI, HiS-S350TI

Itek Energy	IT250HE, IT255HE, IT260HE, IT265HE, IT270HE, IT275HE, IT280HE, IT285HE, IT290HE, IT295HE, IT300HE, IT305HE, IT310HE, IT315HE, IT295SE, IT300SE, IT305SE, IT310SE, IT315SE, IT350SE, IT355SE, IT360SE, IT365SE, IT370SE
JA Solar	JAM60D00-300/BP, JAM60D00-305/BP, JAM60D00-310/BP, JAM60D00-315/BP, JAM60D00-320/BP, JAM72D00-355/BP, JAM72D00-360/BP, JAM72D00-365/BP, JAM72D00-370/BP, JAM72D00-375/BP, JAM72S09-375/PR, JAM72S09-380/PR, JAM72S09-385/PR, JAM72S09-390/PR, JAM72S09-395/PR, JAM72S10-390/PR, JAM72S10-395/PR, JAM72S10-400/PR, JAM72S10-405/PR, JAM72S10-410/PR, JAM72S01-365/PR, JAM72S01-370/PR, JAM72S01-375/PR, JAM72S01-380/PR, JAM72S01-385/PR, JAP6 72-280/3BB, JAP6 72-285/3BB, JAP6 72-290/3BB, JAP6 72-295/3BB, JAP6 72-300/3BB, JAP6 72-305/3BB, JAP6 72-310/3BB, JAP6 72-315/3BB, JAP6 72-320/3BB
Jinko	JKM315M-60HL, JKM320M-60HL, JKM325M-60HL, JKM330M-60HL, JKM335M-60HL, JKM340M-60HL, JKM345M-60HL, JKM305M-60L, JKM310M-60L, JKM315M-60L, JKM325M-60L, JKM370-72L-V, JKM375-72L-V, JKM380-72L-V, JKM385-72L-V, JKM390-72L-V, JKM380-72HL-V, JKM385-72HL-V, JKM390-72HL-V, JKM395-72HL-V, JKM400-72HL-V
Kyocera	KD315GX-LFB, KU260-6MCA, KU265-6MCA, KD255GX-LFB2, KD260GX-LFB2
LG	LG275S1C-G4, LG280S1C-G4, LG285S1C-G4, LG300N1C-G4, LG300N1K-G4, LG300N1T-G4, LG305N1C-G4, LG305N1K-G4, LG310N1C-G4, LG310N1K-G4, LG310N1T-G4, LG315N1C-G4, LG320N1C-G4, LG335S2W-G4, LG340S2W-G4, LG360N2W-B3, LG365N2W-B3, LG365N2W-G4, LG370N2W-G4, LG375N2W-G4, LG380N2W-G4, LG385N2W-G4, LG390N2W-A5, LG395N2W-A5, LG400N2W-A5, LG405N2W-A5, LG410N2W-A5, LG415N2W-A5, LG420N2W-A5, LG425N2W-A5
LONGi	LR6-60PE-BOW-310W, LR6-60HPH-BOB-310W, LR672HPH-SOW-380W
Mission Solar	MSE290SQ5T, MSE295SQ5T, MSE300SQ5T, MSE300SQ8T, MSE305SQ8T, MSE310SQ8T, MSE340SO9J, MSE345SO9J, MSE350SO9J, MSE365SQ9S, MSE370SQ9S, MSE375SQ9S
Mitsubishi	PV-MLE270HD, PV-MLE275HD, PV-MLE280HD
Panasonic	VBHN325SA16, VBHN330SA16
Phono Solar Tech	PS255M-20/U, PS260M-20/U, PS265M-20/U, PS270M-20/U, PS275M-20/U, PS280M-20/U, PS300P-24T, PS305P-24T, PS310P-24T, PS315P-24T, PS320P-24T, PS325P-24T
REC Solar	REC310NP, REC315NP, REC320NP, REC325NP, REC330NP, REC275TP2, REC280TP2, REC285TP2, REC290TP2, REC295TP2, REC300TP2, REC275TP2 BLK2, REC280TP2 BLK2, REC285TP2 BLK2, REC330TP2S 72, REC335TP2S 72, REC340TP2S 72, REC345TP2S 72, REC350TP2S 72, REC355TP2S 72

Renesola	JC 255 M-24/Bbs, JC 260 M-24/Bbs, JC 265 M-24/Bbs, JC 270 M-24/Bbs, JC 250 M-24/Bb, JC 255 M-24/Bb, JC 260 M-24/Bb, JC 305 M-24/Abs, JC 310 M-24/Abs, JC 315 M-24/Abs, JC 320 M-24/Abs, JC 325 M-24/Abs, JC 330 M-24/Abs, JC 335 M-24/Abs, JC 330 S-24/Abs, JC 335 S-24/Abs, JC 340 S-24/Abs, JC 345 S-24/Abs, JC 270 S-24/Bbs, JC 280 S-24/Bbs, JC 285 S-24/Bbs
Sanyo	HIP-190BA3, HIP-195BA3, HIP-200BA3, HIP-205BA3, HIT-N215A01, HIT-N220A01, HIT-N225A01
Seraphim	SRP-335-6MA, SRP-340-6MA, SRP-345-6MA, SRP-350-6MA, SRP-360-6MA, SRP-365-6MA, SRP-370-6MA, SRP-375-6MA, SRP-330-6MA-DG, SRP-335-6MA-DG, SRP-340-6MA-DG, SRP-345-6MA-DG, SRP-355-6MA-DG, SRP-360-6MA-DG, SRP-365-6MA-DG, SRP-370-6MA-DG, SRP-280-6MB, SRP-285-6MB, SRP-290-6MB, SRP-295-6MB, SRP-300-6MB, SRP-305-6MB, SRP-310-6MB, SRP-315-6MB, SRP-275-6MB-DG, SRP-280-6MB-DG, SRP-285-6MB-DG, SRP-290-6MB-DG, SRP-295-6MB-DG, SRP-300-6MB-DG, SRP-305-6MB-DG, SRP-310-6MB-DG, SRP-315-6MB-DG, SRP-280-6MB-HV, SRP-285- SRP-280-6MB, SRP-285-6MB, SRP-290-6MB, SRP-295-6MB 6MB-HV, SRP-290-6MB-HV, SRP-295-6MB-HV, SRP-300-6MB-HV, SRP-305-6MB-HV, SRP-310-6MB-HV, SRP-315-6MB-HV, SRP-325-6PA, SRP-330-6PA, SRP-335-6PA, SRP-340-6PA, SRP-320-6PA-DG, SRP-330-6PA-DG, SRP-335-6PA-DG, SRP-340-6PA-DG, SRP-325-6PA-HV, SRP-330-6PA-HV, SRP-335-6PA-HV, SRP-340-6PA-HV, SRP-270-6PB, SRP-275-6PB, SRP-280-6PB, SRP-285-6PB, SRP-265-6PB-DG, SRP-270-6PB-DG, SRP-275-6PB-DG, SRP-280-6PB-DG, SRP-270-6PB-HV, SRP-275-6PB-HV, SRP-280-6PB-HV, SRP-285-6PB-HV
Silfab	SLA280M, SLA285M, SLA290M, SLA295M, SLA300M, SLA310M, SLA315M, SLA320M, SLG335M, SLG340M, SLG345M, SLG350M, SLG355M, SLG360M, SLG370M, SLG380M, SLA320MCH, SLA320MWT
Solaria	PowerXT-350R-AC, PowerXT-355R-AC, PowerXT-360R-AC, PowerXT-320R-BX, PowerXT-325R-BX, PowerXT-325R-PX, PowerXT-330R-PX, PowerXT-340R-BD, PowerXT-345R-BD, PowerXT-345R-PD, PowerXT-350R-PD, PowerXT-355R-PD, PowerXT-360R-PD, PowerXT-410C-PD, PowerXT-420C-PD, PowerXT-430C-PD
SolarWorld (V2.5 frame)	Sunmodule SW series: SW 220 mono and poly, SW 225 poly, SW 230 poly, SW 235 poly, SW 240 mono and poly, SW 245 mono and poly, SW 250 mono, SW 255 mono, SW 260 mono, SW 265 mono, SW 270 mono Sunmodule Plus series: 285W mono, 280W mono, 275W mono, 270W mono, 265W mono, 260W mono, 255W mono, 250W mono, Sunmodule Protect 275W mono, Sunmodule Protect 270W mono, Sunmodule Protect 265W mono, Sunmodule SW 245 - 255 poly / Pro-Series
SolarWorld (33mm frame)	Sunmodule Pro-Series: 250W poly, 255W poly, 260W poly, 315W XL mono, 320W XL mono, 325W XL mono, 330W XL mono, 335W XL mono, 340W XL mono, 345W XL mono, 350W XL mono

	Sunmodule Plus: 260W mono, 270W mono, 275W mono, 280W mono, 285W mono
Stion	STO-135A, STO-140A, STO-145A, STO-150A
SunEdison	F310EzD, F315EzD, F320EzD, F325EzD, F330EzD, F335EzD, F310EzC, F315EzC, F320EzC, F325EzC, F330EzC, F335EzC, R330EzC, R335EzC, R340EzC, R345EzC, R350EzC, R355EzC
SunPower	SPR-318E-WHT-D, SPR-A400, SPR-A415, SPR-A425, SPR-E19-235, SPR-E19-310-COM, SPR-E19-320, SPR-E20-245, SPR-E20-327, SPR-E20-320-COM, SPR-E20-327-COM, SPR-E20-435-COM, SPR-E20-327-D-AC, SPR-P17-330-COM, SPR-P17-335-COM. SPR-P17-340-COM, SPR-P17-345-COM, SPR-P17-350-COM, SPR-P17-355-COM, SPR-P17-360-COM, SPR-X20-250-BLK, SPR-X20-250-BLK-B-AC, SPR-X20-327-C-AC, SPR-X21-335-BLK, SPR-X21-335-BLK-D-AC, SPR-X21-335-D-AC, SPR-X21-345, SPR-X21-345-COM, SPR-X21-345-D-AC, SPR-X21-350-BLK, SPR-X21-350-BLK-D-AC, SPR-X21-355-BLK, SPR-X21-445-COM, SPR-X21-460-COM, SPR-X21-460-COM, SPR-X21-470-COM, SPR-X22-360, SPR-X22-370, SPR-X22-360-COM, SPR-X22-360-D-AC, SPR-X22-370-D-AC
Trina	TSM-225 PC/PA05, TSM-230 PC/PA05, TSM-235 PC/PA05, TSM-240 PC/PA05, TSM-245 PC/PA05
Yingli	YL230P-29b, YL235P-29b, YL240P-29b, YL245P-29b

Fault Current Path Diagram

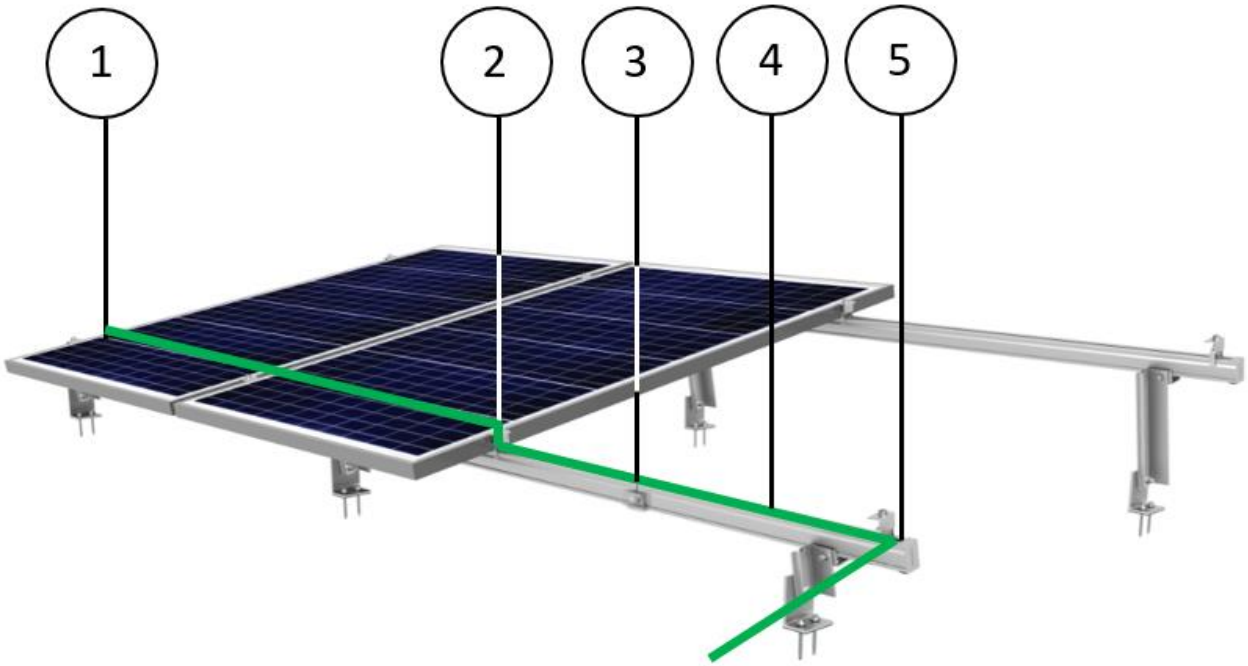

Items are listed in the fault current path in order from the PV Panel to the Grounding Lug:

1. PV Panel
2. Mid Clamp Kit
3. SMR Rail Splice
4. SMR Rail
5. Ground Lug

Fault Current Path

Tools Required for Installation

Electric Drill or Impact Driver. *Note that the use of an impact driver is strongly discouraged for all stainless nut and bolt hardware. Set impact driver to its lowest torque setting.*	
6mm Hex Drive Bit	
Adjustable Torque Wrench, 0 – 35 Nm	
Anti-seize compound (Permatex 80071 or equivalent).	
Tape measure	
Chalk line or laser	
Saws for cutting aluminum posts and rails as necessary	

Torque Values

These values must be adhered to, both for mechanical strength and to insure the performance of the integral grounding and bonding features. It is required that a torque wrench be used to measure the bolt torque during final assembly, and it is recommended that anti-seize compound be applied to the screw threads.

Hardware	Torque
Ground Lug, Screw to secure Ground Wire	5.6 Nm (4.2 ft.-lbs)
SMR End/Mid Clamps	9.4 Nm to 10.2 Nm (6.9 ft-lbs to 7.5 ft-lbs)
SMR L-Foot Adaptor	13 Nm to 15 Nm (10 ft-lbs to 11 ft-lbs)
Lag Screw	As required

Lag Pull-Out Capacities:

Sources: American Wood Council, NDS 2005, Table 11.2 A, 11.3.2 A

Lag pull-out (withdrawal) capacities (lbs.) in typical lumber:	Specific Gravity	5/16" Shaft per 1" thrd depth	5/16" Shaft per 2-1/2" thrd depth
Douglas Fir, Larch	.50	266	665
Douglas Fir, South	.46	235	588
Engelmann Spruce, Lodgepole Pine (MSR 1650 f & higher)	.46	235	588
Hem, Fir	.43	212	530
Hem, Fir (North)	.46	235	588
Southern Pine	.55	307	768
Spruce, Pine, Fir	.42	205	513
Spruce, Pine, Fir (E of 2 million psi and higher grades of MSR and MEL)	.50	266	665

Notes:

1) Thread must be embedded in a rafter or other structural roof member.

2) See NDS Table 11.5.1 C for required edge distances.

3) Figures in this table do not address L-Feet, brackets, or any other footing/attachment product through which the lag fastens the racking system to the roof. Refer to manufacturer product data for more information on your footing/attachment of choice.

SMR Tilt-Up System Overview

The SMR Tilt-Up System is an adjustable single module row and low point load system that is ideal for light roof structure application. The design has an adjustable tilt leg that offers maximum flexibility and tilt degree options that maximize power output production. The installation is easy and quick which saves labor cost.

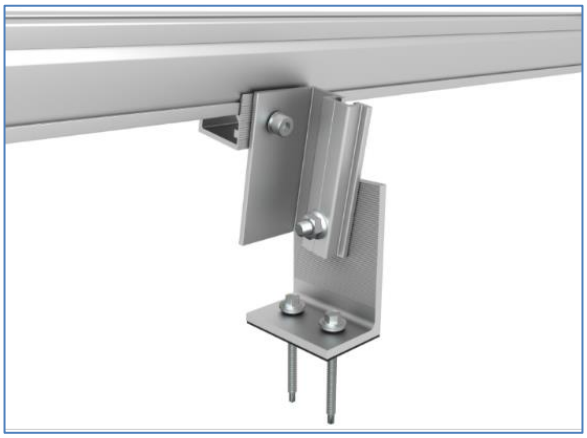

Flat Roof Mounting L-Foot combined with a Tilt-Up Rail can give the system any pitch required.

SunModo offers three standard Tilt-Up Rail lengths 8 inch (front leg), and 14 or 25 inch (rear legs) in order to achieve tilt angles of 10 and 20 degrees. A 9-foot full length Tilt-Up Rail is available for on-site cutting.

Alternative Construction

The L-Foot, Front and Rear Tilt-Legs can be fabricated from 2 X 2 X 1/8 inch thick aluminum angle channel. After fabricating these parts follow the instructions below to complete the assembly.

Penetration Sealing Options:

Sealant System

There are a variety of penetration sealing options, your roof installer should specify the type of penetration sealant to be used.

A structural engineer should specify the type of fastener to be used. Follow the manufacturer's recommendation on the installation and torque to be used with a particular fastener type.

SMR Tilt-Up General Assembly

The SMR Tilt-Up shown below is just one example of the many ways the system can be configured. Consult your project drawings for specific dimensions, attachment configurations and assembly options.

SMR Tilt-Up Tilt Angle Selection
The SMR Tilt-Up chart shown below has been provided to help you selected your desired tilt angle.

Leg Selection Chart

XX CELL PANEL	K10284-XXX	A20276-XXX	FRONT LEG	REAR LEG	a°
60/72 CELL PANEL	K10284-008	A20276-008	8in		10°
	K10284-014	A20276-014		14in	
	K10284-008	A20276-008	8in		20°
	K10284-025	A20276-025		25in	

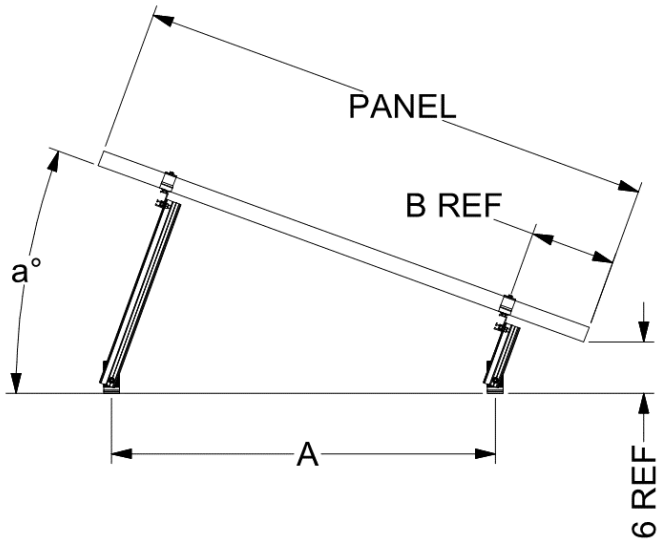

As viewed from E-W
Dimensions are reference only

Roof Attachment

Use either lag screws or self-tapping screws to attach the roof attachment in the desired location. Consult your project drawings for specific dimensions, attachment configuration and assembly options.	

Sealant Installation

Best practice tip: Apply a rectangular bead of sealant to the bottom of the roof attachment for additional waterproofing. Apply additional sealant to the roof if needed to seal gaps or to smooth uneven surfaces.	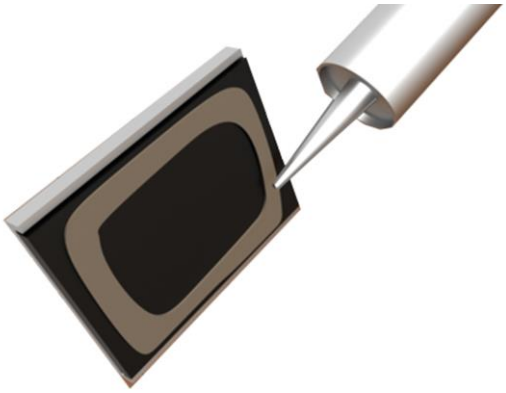

Gasket Compression

Care should be taken to avoid under and over compression of the EPDM sealing washers.	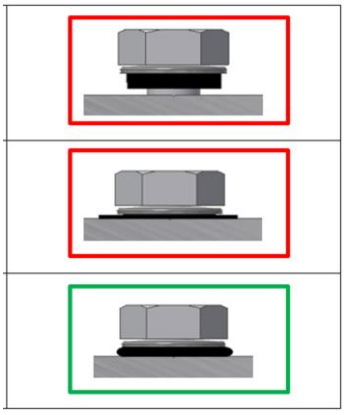

Rail to L-Foot Connection

Attach the Tilt-Up Leg to the L-Foot using the M8 Bolt and Flange Nut. Torque to 15 ft. lbs. Loosely install the L-Foot Adaptor to the L-Foot using the M8 Bolt provided.	

Front Rail Attachment

Install the Rail onto the L-Foot Adaptor. Confirm that the hooks on the L-Foot Adaptor are fully engaged with the hooks on the side of the Rail. Adjust the Rail to the desired location and then secure the Rail to the L-Foot Adaptor using the M8 Bolt; use a 6mm hex driver and torque to 13Nm (10 ft-lbs).	

Rear Rail Attachment

Use the Front Leg assembly instructions to complete the Rear Leg assemly.	

Rail Splice Installation Instructions:

SMR Splice

The SMR Rail Splice has been designed to be both a structural and bonding rail splice.	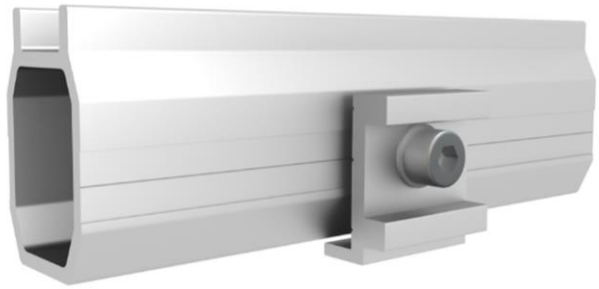

SMR Splice to First Rail

Insert the SMR Splice into the first Rail.	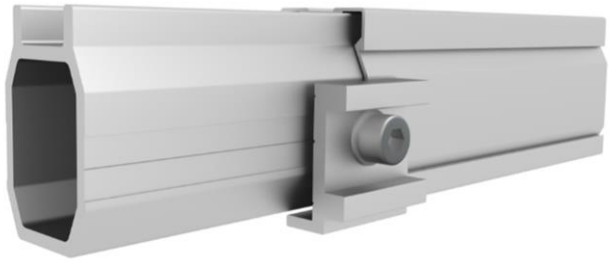

SMR Splice to Second Rail

Insert the SMR Splice into the second Rail until both Rails are stopped by the M8 Bolt. Secure the SMR Rail Splice by tightening the M8 Bolt; use a 6mm hex driver and torque to 13Nm (10 ft-lbs). **Warning:** Spliced Rail must be support by at least one roof attachment per Rail segment regardless of Rail length. **Avertissement:** Le rail épissé doit être supporté par au moins une fixation de toit par segment de rail, quelle que soit la longueur du rail.	

Thermal Break Installation Instructions:

SMR Splice

The maximum permissible continuous Rail run before a thermal break is 60 feet. In cases where a thermal break is necessary it is recommended to use an SMR Splice in conjunction with the Wiley Bonding Jumper (WEEBBNDJMP8.0) to insure continuous bonding across the thermal break.	

Gap Between Rails

Insert the SMR Splice into the Rails with a 1-1/4 inch gap between Rails. Modules cannot be installed over a thermal break. The row of continuous modules must end before the thermal break and a new row must start after the thermal break.	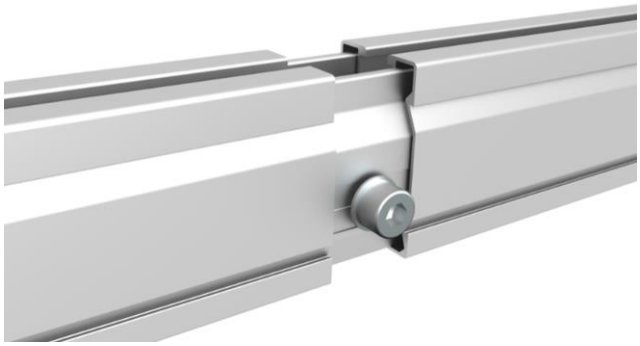

Bonding

Secure the Wiley Bonding Jumper to the Rails using either the SMR Microinverter Mounting Kit (shown) or by using M8 Nuts and Bolts. Insure a loop is left in the Bonding Jumper to allow for thermal expansion and torque to 13Nm (10 ft-lbs).	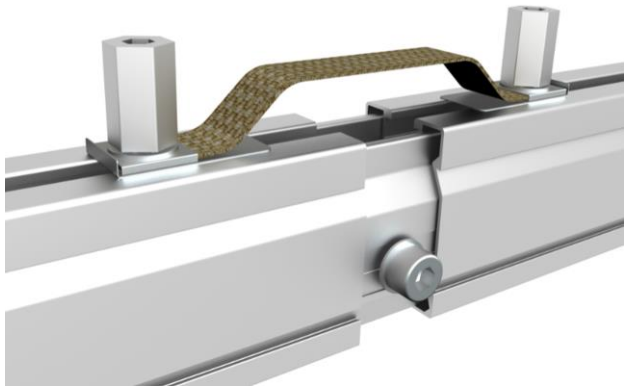

Panel Clamp Installation Instructions:

SMR End Clamp

Install the End Clamp on the Rail at the ends of the PV panel array. Confirm that the hooks on the End Clamp are fully engaged with the hooks on the side of the Rail. Secure the PV panel frame to the Rail using the End Clamp; use a 6mm hex driver and torque to 9.4 Nm (6.9 ft-lbs). Note: For a single panel configuration install bonding pins into the Bonding Pin Holder of the End Clamp.	

End Clamp Location

There must be a minimum of 1.5” [38.1mm] of Rail extending beyond the PV panel frame. Secure the PV panel frame to the Rail using the End Clamp; use a 6mm hex driver and torque to 9.4 Nm (6.9 ft-lbs).	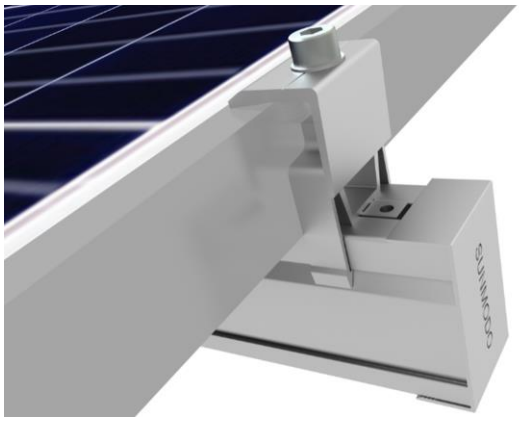

SMR Mid Clamp

The patented SMR self-bonding system is for use with PV modules that have a maximum series fuse rating of 30A.	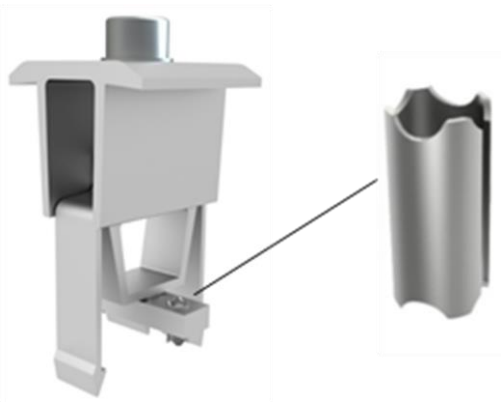

SMR Mid Clamp Attachment

Install the Mid Clamp on the Rail between PV panels. Confirm that the hooks on the Mid Clamp are fully engaged with the hooks on the side of the Rail. Secure the PV panel frame to the Rail using the Mid Clamp; use a 6mm hex driver and torque to 9.4 Nm (6.9 ft-lbs).	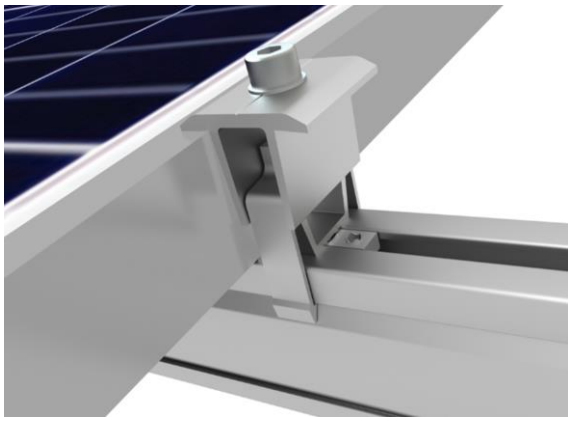

Additional Attachments:

Ground Wire Attachment

The Ground Lug is intended for a single use after final torque values are reached and is designed to terminate or pass thru: #6 thru #12 AWG cable, either solid or stranded, including #6 thru #12 THHN or THWN jacketed cable. See PV module's installation instructions when mounting the Ground Lug to the PV module.	

Ground Lug Installation

The picture shows a Ground Lug mounted on one Rail per row of panels. Ground Lug K10179-001 and detailed installation document D10003 are available from SunModo separately.	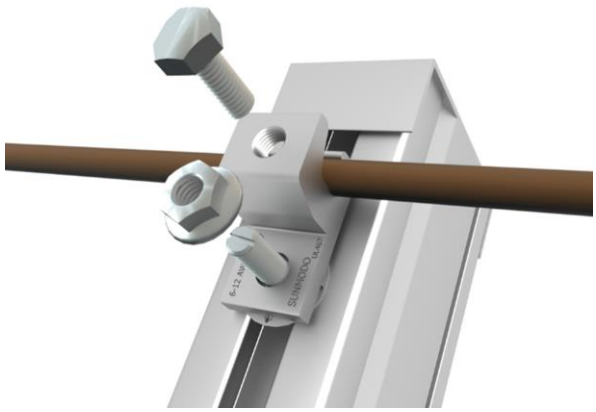

Ground Lug Alternate Installation

Drill a hole on the side of the Rail large enough to accommodate the 6mm (1/4") T-Bolt. Install the Ground Lug to the Rail as shown.	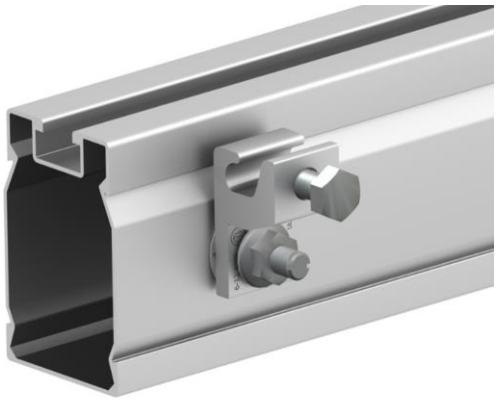

Top Mount Cable Clip Installation

Attach the Top Mount Cable Clip to the top of the Rail and space as needed.	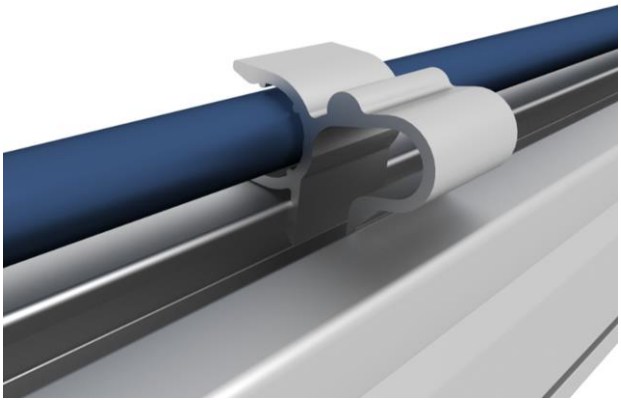

Top Mount Cable Clip Installation

Attach the Top Mount Cable Clip to the top of the Rail and space as needed.	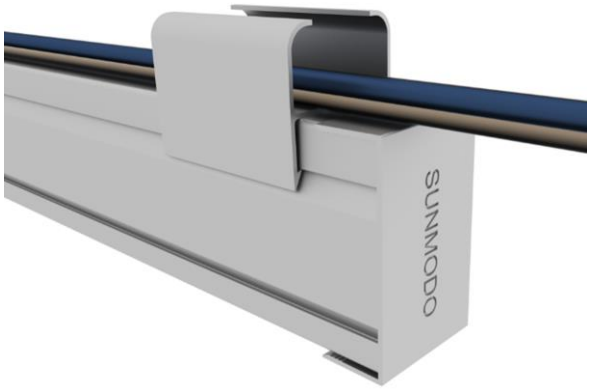

Side Mount Cable Clip Installation

Attach the Side Mount Cable Clip to the side of the Rail and space as needed.	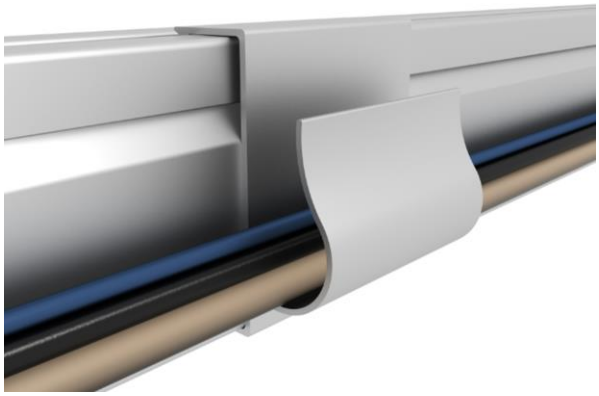

Rail End Cap Attachment

End Caps can be attached to the end of the Rail as shown.	

Microinverter Mounting Kit Installation

Install the T-Bolt into the Rail in the desired location. Add a lock washer between the Rail and microinverter mounting bracket. Add a lock washer on top of the microinverter mounting bracket and secure using the hex nut. Use a 6mm hex driver and torque to 13Nm (10 ft-lbs).	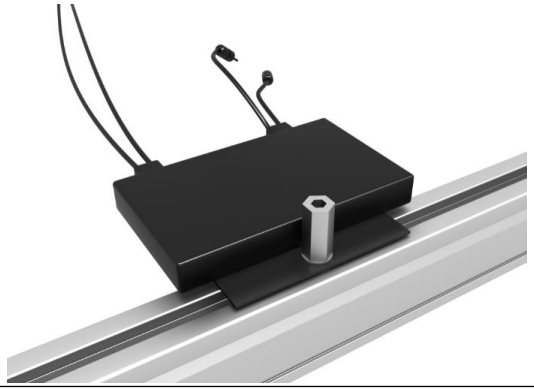

UL 2703 Label Placement

When requested the UL 2703 Label can be located on the Rail.	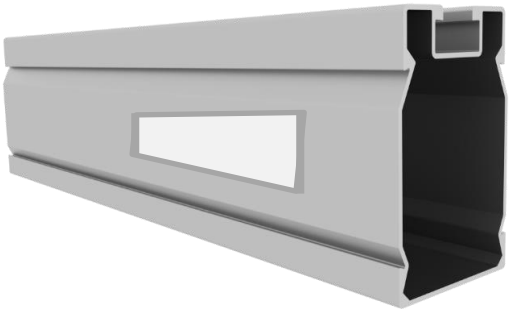

See www.sunmodo.com for current warranty documents and information.

SunModo Corporation
Ph: 360-844-0048