November 2, 2020

Attn: Mr. Peter Abou Chacra
SunModo
14800 NE 65th St.
Vancouver, WA 98682

RE: SunModo – SMR200 Rail
PV Panel Racking System
State of Washington Certification Letter

SEI Project No.: 19498.00

Dear Mr. Abou Chacra:

Structural Enginuity Inc. (SEI) has completed its review of the SunModo – SMR200 Rail System for typical installations of solar PV panels in the state of Washington. The SMR200 Rail is compliant with the sections of the following design references and codes when installed per the conditions and design criteria delineated herein.

Design References and Codes:

- ASCE 7-16 – Minimum Design Loads for Buildings and Other Structures
- 2015 Aluminum Design Manual, by the Aluminum Association
- Materials information and section and details provided by SunModo as appendages to this letter
- 2018 International Building Code
- AC428, Acceptance Criteria for Modular Framing Systems Used to Support Photovoltaic (PV) Modules, November 2012 by ICC-ES

General Mounting System and Analysis Overview:

The SMR200 Rail consists of 6005-T5 (acceptable alternative materials include 6005A-T61 and 6061-T6) extruded aluminum per ASTM B221-08. The rails are used in pairs to support photovoltaic solar panels in order to span between points of attachment to the existing roof structure. The following tables and information summarize the structural analysis performed by SEI in order to certify the SMR200 Rail for the state noted above.

The analysis for certification included the following parameters for each rail system.

SMR200 Rail:

- Risk Category II
- Roof Slopes up to 45 degrees
- Portrait & Landscape orientation of photovoltaic panels
- Max Module Dimensions = Varies, see tables
- Max Mean Roof Height = Varies, see tables (If roof slope < 10°, use eave height)

- Wind Analysis:
  - Wind Category: B, C, and D
  - Roof Zones varies based on roof slope (See Tables)
  - Wind Directionality Factor (Kd) = 0.85
  - Topographic Factor (Kzt) = 1
  - Ground Elevation Factor (Ke): See table below
- Snow Analysis:
  - Snow Exposure Factor (Ce) = 1.0
  - Thermal Factor (Ct) = 1.0
  - Slope Factor (Cs) per ASCE 7-16, Figure 7.4-1
  - Importance Factor (Is) = 1
- Seismic Analysis:
  - Seismic Design Category E or less (Sds = 2.0 max)
  - Importance Factor (Ip) = 1
  - Amplification Factor (ap) = 1.0 per ICC-AC428
  - Component Response Modification Factor (Rp) = 1.5 per ICC-AC 428

Per ASCE 7-16, for locations above sea level, an additional Ground Elevation Factor may be accounted for. The provided tables take this into account by allowing the Wind Speed to be adjusted by a Wind Speed Velocity Multiplier as follows:

Wind Speed Velocity Multiplier based on Ground Elevation Factor (ASCE 7-16, Table 26.9-1)

Ground Elevation above Sea Level (ft), Z_g	**Ground Elevation Factor, K_e**	**Wind Speed Velocity Multiplier, Sqrt(K_e)**
0	1.00	**1.00**
1,000	0.96	**0.98**
2,000	0.93	**0.96**
3,000	0.90	**0.95**
4,000	0.86	**0.93**
5,000	0.83	**0.91**
6,000	0.80	**0.89**

Notes:

1. The Wind Speed Velocity Multiplier shall be determined from the above table using interpolation or from the following formula for all elevations:
   $$\text{Sqrt}(K_e) = \text{Sqrt}(e^{-0.0000362*Z_g})$$
2. The Wind Speed Velocity Multiplier is permitted to be taken as 1.00 in all cases.
3. The wind speed in the project's region shall be multiplied by Wind Speed Velocity Multiplier. The resulting wind speed shall be rounded up to the nearest value provided in the span tables.
4. No interpolation between wind speeds is permitted.
5. Refer to ASCE 7-16 for additional information about the ground elevation factor and its use in determining velocity pressure per Equation 26.10-1.

ASCE 7-16 has several additional roof zones than previous codes. The zones are outlined in the code and diagrams have been provided below to show wind zone locations

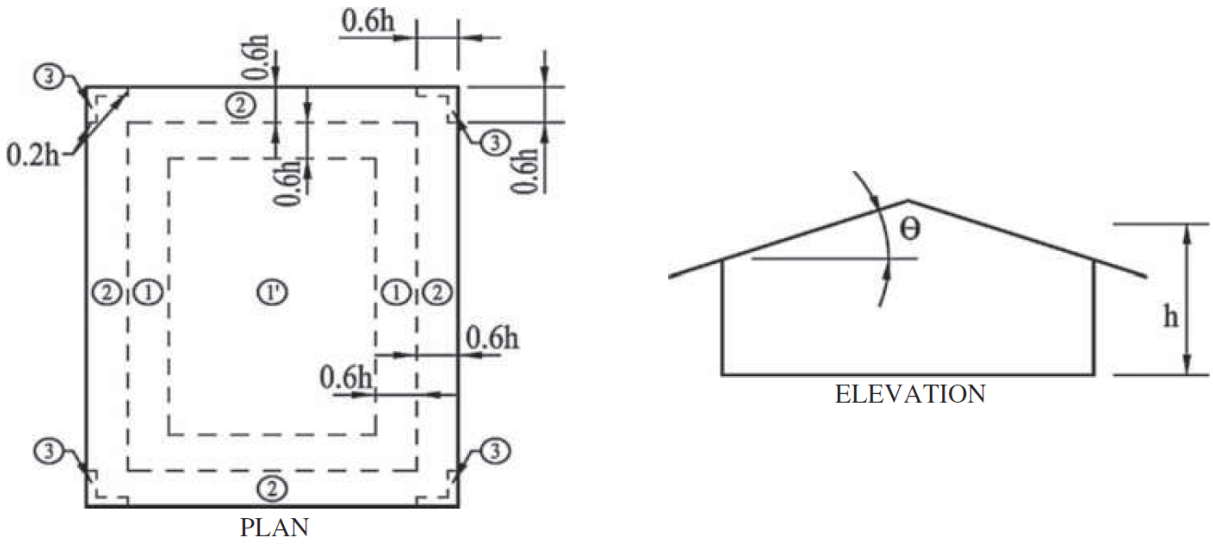

Figure 1: Roof Zones for Gable Roof Slopes Between 0 and 7 degrees

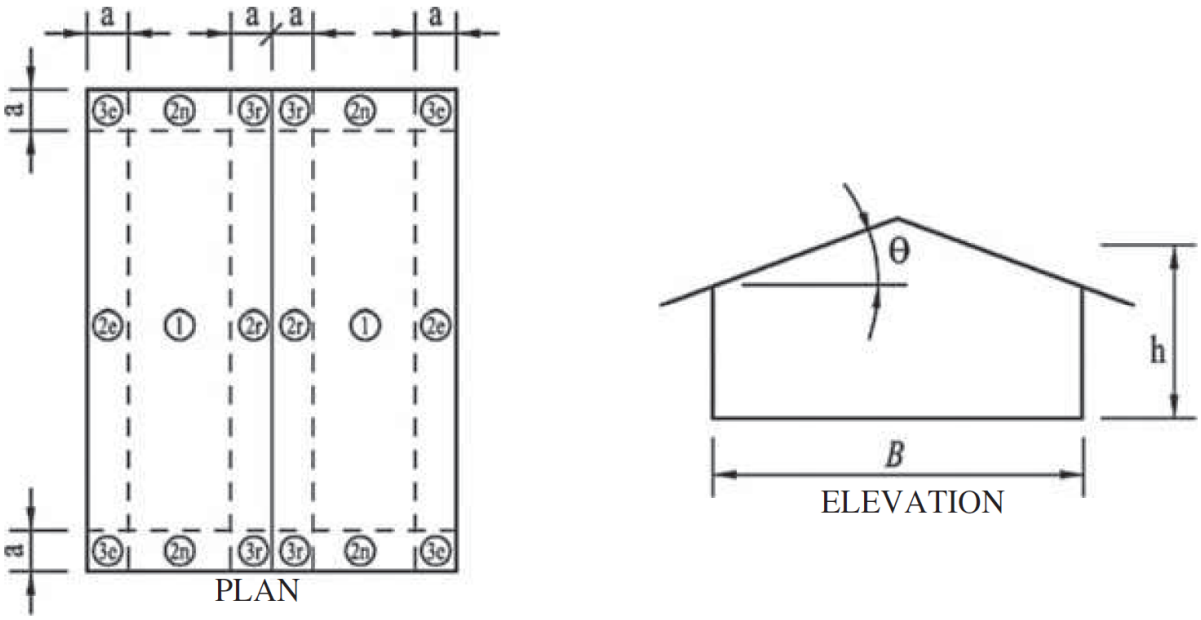

Figure 2: Roof Zones for Gable Roof Slopes Between 7 and 45 degrees

a = 10% of least horizontal dimension or 0.4h, whichever is smaller, but not less than either 4% of least horizontal dimension or 3 ft. If an overhang exists, the edge distance shall be measured from the outside edge of the overhang. The horizontal dimensions used to compute the edge distance shall not include the overhang distance.

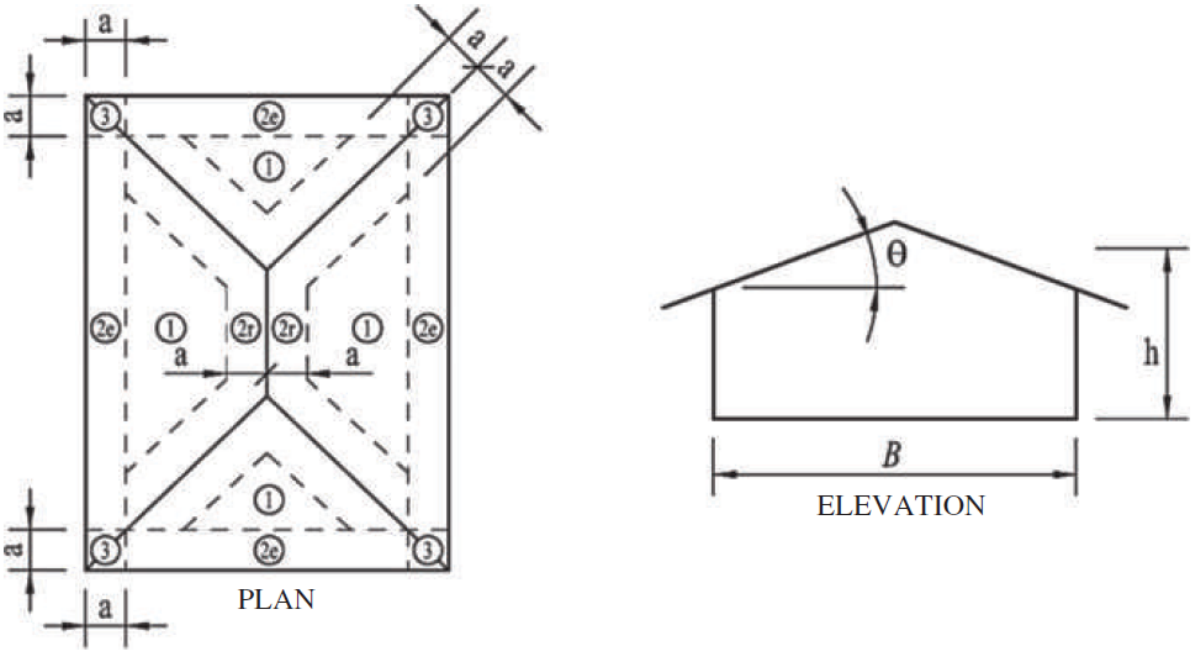

Figure 3: Roof Zones for Hip Roof Slopes Between 7 and 45 degrees

a = 10% of least horizontal dimension or 0.4h, whichever is smaller, but not less than either 4% of least horizontal dimension or 3 ft. If an overhang exists, the edge distance shall be measured from the outside edge of the overhang. The horizontal dimensions used to compute the edge distance shall not include the overhang distance.

For Hip Roofs with a roof slope between 7 and 20 degrees, tables are broken up between buildings with a height to width ratio (h/B) greater than 0.8 or less than 0.5. If the building the array is being mounted on falls between these values, compare both tables and choose the higher value.

Panels can be categorized as exposed or non-exposed based on their location within an array with exposed panels requiring the design wind load acting on them to be multiplied by an additional edge factor. Exposed panels are defined as panels within a distance of 1.5 times the panel chord length when the distance from the edge of the array to the roof edge is greater than 0.5 times the mean roof height and if either d_1 to an adjacent array is greater than 4 ft or d_2 to the next adjacent panel is greater than 4 ft as shown in Figure 4.

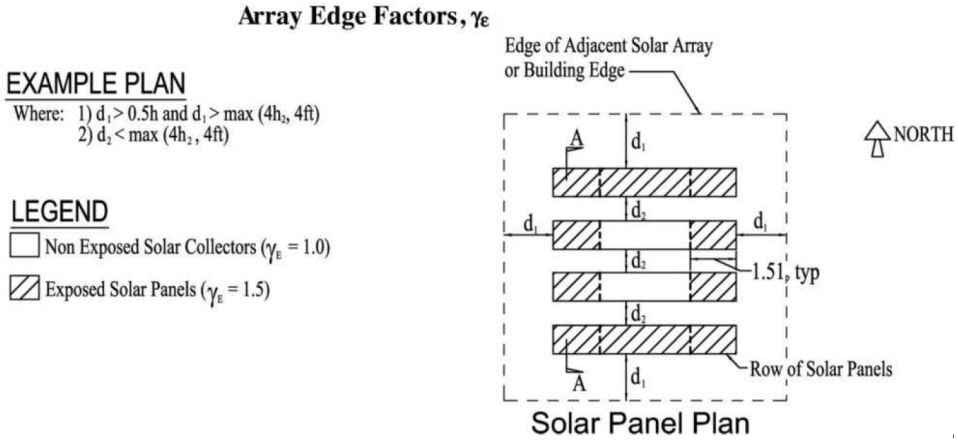

Figure 4: Array Edge Factors

Structural ENGINUITY INC
Ingenuity in Engineering

Applicable loading combinations consisting of dead, wind, snow, and seismic loads in accordance with the governing code requirements were used to determine allowable rail span lengths, based on bending stress capacity, shear capacity, axial capacity, and an assumption of a single-span condition with an allowable deflection of L/60. Design wind pressures were determined using Components and Cladding calculations per ASCE 7-16, Chapters 26-30 in conjunction with the loading parameters noted above. Applicable roof snow load shall be based on ground snow load maps, equations, and factors of ASCE 7-16, Chapter 7 and applicable sections of the 2018 International Building Code for the location of the project in combination with the loading parameters noted above.

It should be noted that the analysis was limited to the capacity of the SMR200 Rail. Attachments of the rail to the roof structure and analysis of the roof structure itself shall be the responsibility of the installer and should be reviewed and approved by a registered design professional where required by the local authority having jurisdiction.

Installation Notes:

The SMR200 Rail shall be installed with the following guidelines to be in compliance with attached span tables:

- Tables noted below assume two support rails are being used per each row of photovoltaic modules in a roof solar array.
- Rails shall be continuous and not spliced over a minimum of 2 supports except for span lengths shaded with In these cases it is acceptable to use a minimum of 1 support per rail section as long as all supports are located at a maximum of 48” on center and the first and last rail sections have a minimum of 2 supports. Splices shall be made with SunModo’s structural splice.
- System shall be mounted parallel to roof surface with a 2” to 10” gap between roof surface and bottom of module.
- Installation over roof overhangs or within 10” of any roof edge is not recommended
- Maximum end cantilever of aluminum support rail shall not exceed 1/3 of allowable span in the roof wind pressure zone of the cantilever.
- Tables attached are limited to structural capability of the support rails only; therefore, observe all local jurisdiction requirements regarding roof setback requirements when laying out support rails and solar array.
- Actual span lengths used must be within capacity of roof attachment and structural capacity of roof member supporting solar array.

Structural ENGINUITY INC
Ingenuity in Engineering

Conclusion and Certification Summary:

Based on the structural analysis performed by SEI in regard to the loading parameters specified above for SMR200 Rail, the following Span Tables for the SunModo SMR200 Rail System were determined. The various span information is controlled by the applicable wind and snow loads to the structure to which the array is being mounted on the roof and based on the roof zone to which the array is installed on the roof. The tables allow for multiple panel sizes and orientations as outlined in the table of contents and on the headers of each table. The tables are organized as follows for each loading condition:

Table A: Non-exposed panels
Table B: Exposed panels

This letter is to certify that the loading criteria and design basis used for the structural analysis of the SMR200 Rail PV Panel Racking System for the span tables attached is validated and performed in compliance with the applicable design codes noted previously.

Please contact our office if you have any further questions relating to this matter.

Sincerely,

Peter Martin
Engineer III
pmartin@structuralenginuityinc.com

Allan T. Myket, P.E.
President/Founder
amyket@structuralenginuityinc.com

Structural Enginuity Inc.

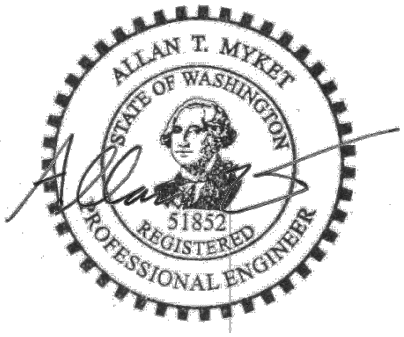

11/19/20

Structural ENGINUITY INC
Ingenuity in Engineering

Table of Contents

60 Cell Module (Portrait Orientation, Max Length 67.5”)_____C1-C96
- Mean Roof Height Less Than 15 Feet
  - -Gable Roof, Roof Slope Between 0 and 7 degrees_____C1-C6
  - -Gable Roof, Roof Slope Between 7 and 20 degrees_____C7-C12
  - -Gable Roof, Roof Slope Between 20 and 27 degrees_____C13-C18
  - -Gable Roof, Roof Slope Between 27 and 45 degrees_____C19-C24
  - -Hip Roof, Roof Slope Between 7 and 20 degrees (h/B ≥ 0.8)_____C25-C30
  - -Hip Roof, Roof Slope Between 7 and 20 degrees (h/B ≤ 0.5)_____C31-C36
  - -Hip Roof, Roof Slope Between 20 and 27 degrees_____C37-C42
  - -Hip Roof, Roof Slope Between 27 and 45 degrees_____C43-C48
- Mean Roof Height Between 15 and 30 Feet
  - -Gable Roof, Roof Slope Between 0 and 7 degrees_____C49-C54
  - -Gable Roof, Roof Slope Between 7 and 20 degrees_____C55-C60
  - -Gable Roof, Roof Slope Between 20 and 27 degrees_____C61-C66
  - -Gable Roof, Roof Slope Between 27 and 45 degrees_____C67-C72
  - -Hip Roof, Roof Slope Between 7 and 20 degrees (h/B ≥ 0.8)_____C73-C78
  - -Hip Roof, Roof Slope Between 7 and 20 degrees (h/B ≤ 0.5)_____C79-C84
  - -Hip Roof, Roof Slope Between 20 and 27 degrees_____C85-C90
  - -Hip Roof, Roof Slope Between 27 and 45 degrees _____C91-C96

72 Cell Module (Portrait Orientation, Max Length 82”)_____C97-C192
- Mean Roof Height Less Than 15 Feet
  - -Gable Roof, Roof Slope Between 0 and 7 degrees_____C97-C102
  - -Gable Roof, Roof Slope Between 7 and 20 degrees_____C103-C108
  - -Gable Roof, Roof Slope Between 20 and 27 degrees_____C109-C114
  - -Gable Roof, Roof Slope Between 27 and 45 degrees_____C115-C120
  - -Hip Roof, Roof Slope Between 7 and 20 degrees (h/B ≥ 0.8)_____C121-C126
  - -Hip Roof, Roof Slope Between 7 and 20 degrees (h/B ≤ 0.5)_____C127-C132
  - -Hip Roof, Roof Slope Between 20 and 27 degrees_____C133-C138
  - -Hip Roof, Roof Slope Between 27 and 45 degrees _____C139-C144
- Mean Roof Height Between 15 and 30 Feet
  - -Gable Roof, Roof Slope Between 0 and 7 degrees_____C145-C150
  - -Gable Roof, Roof Slope Between 7 and 20 degrees_____C151-C156
  - -Gable Roof, Roof Slope Between 20 and 27 degrees_____C157-C162
  - -Gable Roof, Roof Slope Between 27 and 45 degrees_____C163-C168
  - -Hip Roof, Roof Slope Between 7 and 20 degrees (h/B ≥ 0.8)_____C169-C174
  - -Hip Roof, Roof Slope Between 7 and 20 degrees (h/B ≤ 0.5)_____C175-C180
  - -Hip Roof, Roof Slope Between 20 and 27 degrees_____C181-C186
  - -Hip Roof, Roof Slope Between 27 and 45 degrees_____C187-C192

1815 W. Diehl Rd, Suite 100, Naperville, IL 60563
630-219-1997 (P)
www.structuralenginuityinc.com

Structural ENGINUITY INC
Ingenuity in Engineering

Table of Contents Continued

Module in Landscape Orientation (Max Width 42”)_____C193-C288
Mean Roof Height Less Than 15 Feet
-Gable Roof, Roof Slope Between 0 and 7 degrees_____C193-C198
-Gable Roof, Roof Slope Between 7 and 20 degrees_____C199-C204
-Gable Roof, Roof Slope Between 20 and 27 degrees_____C205-C210
-Gable Roof, Roof Slope Between 27 and 45 degrees_____C211-C216
-Hip Roof, Roof Slope Between 7 and 20 degrees (h/B ≥ 0.8)_____C217-C222
-Hip Roof, Roof Slope Between 7 and 20 degrees (h/B ≤ 0.5)_____C223-C228
-Hip Roof, Roof Slope Between 20 and 27 degrees_____C229-C234
-Hip Roof, Roof Slope Between 27 and 45 degrees_____C235-C240
Mean Roof Height Between 15 and 30 Feet
-Gable Roof, Roof Slope Between 0 and 7 degrees_____C241-C246
-Gable Roof, Roof Slope Between 7 and 20 degrees_____C247-C252
-Gable Roof, Roof Slope Between 20 and 27 degrees_____C253-C258
-Gable Roof, Roof Slope Between 27 and 45 degrees_____C259-C264
-Hip Roof, Roof Slope Between 7 and 20 degrees (h/B ≥ 0.8)_____C265-C270
-Hip Roof, Roof Slope Between 7 and 20 degrees (h/B ≤ 0.5)_____C271-C276
-Hip Roof, Roof Slope Between 20 and 27 degrees_____C277-C282
-Hip Roof, Roof Slope Between 27 and 45 degrees_____C283-C288

1815 W. Diehl Rd, Suite 100, Naperville, IL 60563
630-219-1997 (P)
www.structuralenginuityinc.com

Structural ENGINUITY INC
Ingenuity in Engineering

SUNMODO®

Max Rail Spans for SunModo SMR200 Rail System

Table 1a

Mean Roof Height: h ≤ 15 ft
Roof Angle: 0 < θ ≤ 7 degrees
Exposure Category: B
Panel Orientation: Portrait
North/South Support Y_E = 1
Roof Type : Gable

Roof Wind Zone	Ground Snow Load (psf)	Wind Speed (mph)												
		90	95	100	105	110	115	120	130	140	150	160	170	180
Zone 1'	0	119	119	119	119	119	119	119	119	119	119	119	119	119
	10	113	113	113	113	113	113	113	113	113	113	113	112	111
	20	89	89	89	89	89	89	89	89	89	89	89	89	89
	30	87	87	87	87	87	87	87	87	87	87	87	87	87
	40	77	77	77	77	77	77	77	77	77	77	77	77	77
	50	70	70	70	70	70	70	70	70	70	70	70	70	70
	60	64	64	64	64	64	64	64	64	64	64	64	64	64
	70	60	60	60	60	60	60	60	60	60	60	60	60	60
	80	56	56	56	56	56	56	56	56	56	56	56	56	56
	90	53	53	53	53	53	53	53	53	53	53	53	53	53
Zone 1	0	119	119	119	119	119	119	119	119	119	113	107	101	96
	10	113	113	113	113	113	113	113	113	113	113	107	101	96
	20	89	89	89	89	89	89	89	89	89	89	89	89	89
	30	87	87	87	87	87	87	87	87	87	87	87	87	87
	40	77	77	77	77	77	77	77	77	77	77	77	77	77
	50	70	70	70	70	70	70	70	70	70	70	70	70	70
	60	64	64	64	64	64	64	64	64	64	64	64	64	64
	70	60	60	60	60	60	60	60	60	60	60	60	60	60
	80	56	56	56	56	56	56	56	56	56	56	56	56	56
	90	53	53	53	53	53	53	53	53	53	53	53	53	53
Zone 2	0	119	119	119	119	119	119	119	112	105	99	94	87	80
	10	113	113	113	113	113	113	113	112	105	99	94	87	80
	20	89	89	89	89	89	89	89	89	89	89	89	87	80
	30	87	87	87	87	87	87	87	87	87	87	87	87	80
	40	77	77	77	77	77	77	77	77	77	77	77	77	77
	50	70	70	70	70	70	70	70	70	70	70	70	70	70
	60	64	64	64	64	64	64	64	64	64	64	64	64	64
	70	60	60	60	60	60	60	60	60	60	60	60	60	60
	80	56	56	56	56	56	56	56	56	56	56	56	56	56
	90	53	53	53	53	53	53	53	53	53	53	53	53	53
Zone 3	0	119	119	119	119	115	110	106	99	92	84	77	71	66
	10	113	113	113	113	113	110	106	99	92	84	77	71	66
	20	89	89	89	89	89	89	89	89	89	84	77	71	66
	30	87	87	87	87	87	87	87	87	87	84	77	71	66
	40	77	77	77	77	77	77	77	77	77	77	77	71	66
	50	70	70	70	70	70	70	70	70	70	70	70	70	66
	60	64	64	64	64	64	64	64	64	64	64	64	64	64
	70	60	60	60	60	60	60	60	60	60	60	60	60	60
	80	56	56	56	56	56	56	56	56	56	56	56	56	56
	90	53	53	53	53	53	53	53	53	53	53	53	53	53

Notes:

1. Tables are based on critical rail span for load combinations as specified in chapter 2 of the ASCE 7-16 and allowable design loads per the 2015 Aluminum Design Manual.
2. Panels are assumed to be in portrait orientation with a maximum length of 67.5"

Structural ENGINUITY INC
Ingenuity in Engineering

SUNMODO®

Max Rail Spans for SunModo SMR200 Rail System

Table 1b

Mean Roof Height: h ≤ 15 ft
Roof Angle: 0 < θ ≤ 7 degrees
Exposure Category: B
Panel Orientation: Portrait
North/South Support γ_E = 1.5
Roof Type : Gable

Roof Wind Zone	Ground Snow Load (psf)	Wind Speed (mph)												
		90	95	100	105	110	115	120	130	140	150	160	170	180
Zone 1'	0	119	119	119	119	119	119	119	119	119	119	113	107	102
	10	113	113	113	113	113	113	113	113	113	113	113	107	102
	20	89	89	89	89	89	89	89	89	89	89	89	89	89
	30	87	87	87	87	87	87	87	87	87	87	87	87	87
	40	77	77	77	77	77	77	77	77	77	77	77	77	77
	50	70	70	70	70	70	70	70	70	70	70	70	70	70
	60	64	64	64	64	64	64	64	64	64	64	64	64	64
	70	60	60	60	60	60	60	60	60	60	60	60	60	60
	80	56	56	56	56	56	56	56	56	56	56	56	56	56
	90	53	53	53	53	53	53	53	53	53	53	53	53	53
Zone 1	0	119	119	119	119	119	119	116	107	101	95	88	81	75
	10	113	113	113	113	113	113	113	107	101	95	88	81	75
	20	89	89	89	89	89	89	89	89	89	89	88	81	75
	30	87	87	87	87	87	87	87	87	87	87	87	81	75
	40	77	77	77	77	77	77	77	77	77	77	77	77	75
	50	70	70	70	70	70	70	70	70	70	70	70	70	70
	60	64	64	64	64	64	64	64	64	64	64	64	64	64
	70	60	60	60	60	60	60	60	60	60	60	60	60	60
	80	56	56	56	56	56	56	56	56	56	56	56	56	56
	90	53	53	53	53	53	53	53	53	53	53	53	53	53
Zone 2	0	119	119	119	113	109	104	101	94	86	78	72	66	62
	10	113	113	113	113	109	104	101	94	86	78	72	66	62
	20	89	89	89	89	89	89	89	89	86	78	72	66	62
	30	87	87	87	87	87	87	87	87	86	78	72	66	62
	40	77	77	77	77	77	77	77	77	77	77	72	66	62
	50	70	70	70	70	70	70	70	70	70	70	70	66	62
	60	64	64	64	64	64	64	64	64	64	64	64	64	62
	70	60	60	60	60	60	60	60	60	60	60	60	60	60
	80	56	56	56	56	56	56	56	56	56	56	56	56	56
	90	53	53	53	53	53	53	53	53	53	53	53	53	53
Zone 3	0	115	109	104	100	96	91	86	77	70	64	59	54	50
	10	113	109	104	100	96	91	86	77	70	64	59	54	50
	20	89	89	89	89	89	89	86	77	70	64	59	54	50
	30	87	87	87	87	87	87	86	77	70	64	59	54	50
	40	77	77	77	77	77	77	77	77	70	64	59	54	50
	50	70	70	70	70	70	70	70	70	70	64	59	54	50
	60	64	64	64	64	64	64	64	64	64	64	59	54	50
	70	60	60	60	60	60	60	60	60	60	60	59	54	50
	80	56	56	56	56	56	56	56	56	56	56	56	54	50
	90	53	53	53	53	53	53	53	53	53	53	53	53	50

Notes:

1. Tables are based on critical rail span for load combinations as specified in chapter 2 of the ASCE 7-16 and allowable design loads per the 2015 Aluminum Design Manual.
2. Panels are assumed to be in portrait orientation with a maximum length of 67.5"

Structural ENGINUITY INC
Ingenuity in Engineering

SUNMODO®

Max Rail Spans for SunModo SMR200 Rail System

Table 2a

Mean Roof Height: h ≤ 15 ft
Roof Angle: 0 < θ ≤ 7 degrees
Exposure Category: C
Panel Orientation: Portrait
North/South Support γ_E = 1
Roof Type : Gable

Roof Wind Zone	Ground Snow Load (psf)	Wind Speed (mph)												
		90	95	100	105	110	115	120	130	140	150	160	170	180
Zone 1'	0	119	119	119	119	119	119	119	119	119	119	113	108	102
	10	113	113	113	113	113	113	113	113	112	111	110	108	102
	20	89	89	89	89	89	89	89	89	89	89	89	89	89
	30	87	87	87	87	87	87	87	87	87	87	87	87	87
	40	77	77	77	77	77	77	77	77	77	77	77	77	77
	50	70	70	70	70	70	70	70	70	70	70	70	70	70
	60	64	64	64	64	64	64	64	64	64	64	64	64	64
	70	60	60	60	60	60	60	60	60	60	60	60	60	60
	80	56	56	56	56	56	56	56	56	56	56	56	56	56
	90	53	53	53	53	53	53	53	53	53	53	53	53	53
Zone 1	0	119	119	119	119	119	119	116	108	101	95	88	81	75
	10	113	113	113	113	113	113	113	108	101	95	88	81	75
	20	89	89	89	89	89	89	89	89	89	89	88	81	75
	30	87	87	87	87	87	87	87	87	87	87	87	81	75
	40	77	77	77	77	77	77	77	77	77	77	77	77	75
	50	70	70	70	70	70	70	70	70	70	70	70	70	70
	60	64	64	64	64	64	64	64	64	64	64	64	64	64
	70	60	60	60	60	60	60	60	60	60	60	60	60	60
	80	56	56	56	56	56	56	56	56	56	56	56	56	56
	90	53	53	53	53	53	53	53	53	53	53	53	53	53
Zone 2	0	119	119	119	114	109	105	101	94	86	78	72	67	62
	10	113	113	113	113	109	105	101	94	86	78	72	67	62
	20	89	89	89	89	89	89	89	89	86	78	72	67	62
	30	87	87	87	87	87	87	87	87	86	78	72	67	62
	40	77	77	77	77	77	77	77	77	77	77	72	67	62
	50	70	70	70	70	70	70	70	70	70	70	70	67	62
	60	64	64	64	64	64	64	64	64	64	64	64	64	62
	70	60	60	60	60	60	60	60	60	60	60	60	60	60
	80	56	56	56	56	56	56	56	56	56	56	56	56	56
	90	53	53	53	53	53	53	53	53	53	53	53	53	53
Zone 3	0	115	109	104	100	96	92	87	78	70	64	59	54	51
	10	113	109	104	100	96	92	87	78	70	64	59	54	51
	20	89	89	89	89	89	89	87	78	70	64	59	54	51
	30	87	87	87	87	87	87	87	78	70	64	59	54	51
	40	77	77	77	77	77	77	77	77	70	64	59	54	51
	50	70	70	70	70	70	70	70	70	70	64	59	54	51
	60	64	64	64	64	64	64	64	64	64	64	59	54	51
	70	60	60	60	60	60	60	60	60	60	60	59	54	51
	80	56	56	56	56	56	56	56	56	56	56	56	54	51
	90	53	53	53	53	53	53	53	53	53	53	53	53	51

Notes:

1. Tables are based on critical rail span for load combinations as specified in chapter 2 of the ASCE 7-16 and allowable design loads per the 2015 Aluminum Design Manual.
2. Panels are assumed to be in portrait orientation with a maximum length of 67.5"

Structural ENGINUITY INC
Ingenuity in Engineering

SUNMODO®

Max Rail Spans for SunModo SMR200 Rail System

Table 2b

Mean Roof Height: h ≤ 15 ft
Roof Angle: 0 < θ ≤ 7 degrees
Exposure Category: C
Panel Orientation: Portrait
North/South Support γ_E = 1.5
Roof Type : Gable

Roof Wind Zone	Ground Snow Load (psf)	Wind Speed (mph)												
		90	95	100	105	110	115	120	130	140	150	160	170	180
Zone 1'	0	119	119	119	119	119	119	119	114	107	101	95	90	84
	10	113	113	113	113	113	113	113	113	107	101	95	90	84
	20	89	89	89	89	89	89	89	89	89	89	89	89	84
	30	87	87	87	87	87	87	87	87	87	87	87	87	84
	40	77	77	77	77	77	77	77	77	77	77	77	77	77
	50	70	70	70	70	70	70	70	70	70	70	70	70	70
	60	64	64	64	64	64	64	64	64	64	64	64	64	64
	70	60	60	60	60	60	60	60	60	60	60	60	60	60
	80	56	56	56	56	56	56	56	56	56	56	56	56	56
	90	53	53	53	53	53	53	53	53	53	53	53	53	53
Zone 1	0	119	119	114	109	104	100	97	89	80	73	68	62	58
	10	113	113	113	109	104	100	97	89	80	73	68	62	58
	20	89	89	89	89	89	89	89	89	80	73	68	62	58
	30	87	87	87	87	87	87	87	87	80	73	68	62	58
	40	77	77	77	77	77	77	77	77	77	73	68	62	58
	50	70	70	70	70	70	70	70	70	70	70	68	62	58
	60	64	64	64	64	64	64	64	64	64	64	64	62	58
	70	60	60	60	60	60	60	60	60	60	60	60	60	58
	80	56	56	56	56	56	56	56	56	56	56	56	56	56
	90	53	53	53	53	53	53	53	53	53	53	53	53	53
Zone 2	0	109	104	99	95	90	85	80	73	66	60	56	52	48
	10	109	104	99	95	90	85	80	73	66	60	56	52	48
	20	89	89	89	89	89	85	80	73	66	60	56	52	48
	30	87	87	87	87	87	85	80	73	66	60	56	52	48
	40	77	77	77	77	77	77	77	73	66	60	56	52	48
	50	70	70	70	70	70	70	70	70	66	60	56	52	48
	60	64	64	64	64	64	64	64	64	64	60	56	52	48
	70	60	60	60	60	60	60	60	60	60	60	56	52	48
	80	56	56	56	56	56	56	56	56	56	56	56	52	48
	90	53	53	53	53	53	53	53	53	53	53	53	52	48
Zone 3	0	96	90	84	79	74	70	66	59	54	49	45	42	40
	10	96	90	84	79	74	70	66	59	54	49	45	42	40
	20	89	89	84	79	74	70	66	59	54	49	45	42	40
	30	87	87	84	79	74	70	66	59	54	49	45	42	40
	40	77	77	77	77	74	70	66	59	54	49	45	42	40
	50	70	70	70	70	70	70	66	59	54	49	45	42	40
	60	64	64	64	64	64	64	64	59	54	49	45	42	40
	70	60	60	60	60	60	60	60	59	54	49	45	42	40
	80	56	56	56	56	56	56	56	56	54	49	45	42	40
	90	53	53	53	53	53	53	53	53	53	49	45	42	40

Notes:

1. Tables are based on critical rail span for load combinations as specified in chapter 2 of the ASCE 7-16 and allowable design loads per the 2015 Aluminum Design Manual.
2. Panels are assumed to be in portrait orientation with a maximum length of 67.5"

Structural ENGINUITY INC
Ingenuity in Engineering

SUNMODO®

Max Rail Spans for SunModo SMR200 Rail System

Table 3a

Mean Roof Height: h ≤ 15 ft
Roof Angle: 0 < θ ≤ 7 degrees
Exposure Category: D
Panel Orientation: Portrait
North/South Support Y_E = 1
Roof Type : Gable

Roof Wind Zone	Ground Snow Load (psf)	Wind Speed (mph)												
		90	95	100	105	110	115	120	130	140	150	160	170	180
Zone 1'	0	119	119	119	119	119	119	119	119	117	110	104	99	95
	10	113	113	113	113	113	113	113	112	111	109	104	99	95
	20	89	89	89	89	89	89	89	89	89	89	89	89	89
	30	87	87	87	87	87	87	87	87	87	87	87	87	87
	40	77	77	77	77	77	77	77	77	77	77	77	77	77
	50	70	70	70	70	70	70	70	70	70	70	70	70	70
	60	64	64	64	64	64	64	64	64	64	64	64	64	64
	70	60	60	60	60	60	60	60	60	60	60	60	60	60
	80	56	56	56	56	56	56	56	56	56	56	56	56	56
	90	53	53	53	53	53	53	53	53	53	53	53	53	53
Zone 1	0	119	119	119	119	115	110	106	99	93	85	78	72	67
	10	113	113	113	113	113	110	106	99	93	85	78	72	67
	20	89	89	89	89	89	89	89	89	89	85	78	72	67
	30	87	87	87	87	87	87	87	87	87	85	78	72	67
	40	77	77	77	77	77	77	77	77	77	77	77	72	67
	50	70	70	70	70	70	70	70	70	70	70	70	70	67
	60	64	64	64	64	64	64	64	64	64	64	64	64	64
	70	60	60	60	60	60	60	60	60	60	60	60	60	60
	80	56	56	56	56	56	56	56	56	56	56	56	56	56
	90	53	53	53	53	53	53	53	53	53	53	53	53	53
Zone 2	0	119	114	109	104	100	96	93	83	76	69	64	59	55
	10	113	113	109	104	100	96	93	83	76	69	64	59	55
	20	89	89	89	89	89	89	89	83	76	69	64	59	55
	30	87	87	87	87	87	87	87	83	76	69	64	59	55
	40	77	77	77	77	77	77	77	77	76	69	64	59	55
	50	70	70	70	70	70	70	70	70	70	69	64	59	55
	60	64	64	64	64	64	64	64	64	64	64	64	59	55
	70	60	60	60	60	60	60	60	60	60	60	60	59	55
	80	56	56	56	56	56	56	56	56	56	56	56	56	55
	90	53	53	53	53	53	53	53	53	53	53	53	53	53
Zone 3	0	105	100	96	91	85	80	76	68	62	57	52	48	45
	10	105	100	96	91	85	80	76	68	62	57	52	48	45
	20	89	89	89	89	85	80	76	68	62	57	52	48	45
	30	87	87	87	87	85	80	76	68	62	57	52	48	45
	40	77	77	77	77	77	77	76	68	62	57	52	48	45
	50	70	70	70	70	70	70	70	68	62	57	52	48	45
	60	64	64	64	64	64	64	64	64	62	57	52	48	45
	70	60	60	60	60	60	60	60	60	60	57	52	48	45
	80	56	56	56	56	56	56	56	56	56	56	52	48	45
	90	53	53	53	53	53	53	53	53	53	53	52	48	45

Notes:

1. Tables are based on critical rail span for load combinations as specified in chapter 2 of the ASCE 7-16 and allowable design loads per the 2015 Aluminum Design Manual.
2. Panels are assumed to be in portrait orientation with a maximum length of 67.5"

Structural ENGINUITY INC
Ingenuity in Engineering

SUNMODO®

Max Rail Spans for SunModo SMR200 Rail System

Table 3b

Mean Roof Height: h ≤ 15 ft
Roof Angle: 0 < θ ≤ 7 degrees
Exposure Category: D
Panel Orientation: Portrait
North/South Support γ_E = 1.5
Roof Type : Gable

Roof Wind Zone	Ground Snow Load (psf)	Wind Speed (mph)												
		90	95	100	105	110	115	120	130	140	150	160	170	180
Zone 1'	0	119	119	119	119	119	117	112	105	98	93	86	80	74
	10	113	113	113	113	113	113	112	105	98	93	86	80	74
	20	89	89	89	89	89	89	89	89	89	89	86	80	74
	30	87	87	87	87	87	87	87	87	87	87	86	80	74
	40	77	77	77	77	77	77	77	77	77	77	77	77	74
	50	70	70	70	70	70	70	70	70	70	70	70	70	70
	60	64	64	64	64	64	64	64	64	64	64	64	64	64
	70	60	60	60	60	60	60	60	60	60	60	60	60	60
	80	56	56	56	56	56	56	56	56	56	56	56	56	56
	90	53	53	53	53	53	53	53	53	53	53	53	53	53
Zone 1	0	115	109	104	100	96	92	87	78	71	65	60	55	52
	10	113	109	104	100	96	92	87	78	71	65	60	55	52
	20	89	89	89	89	89	89	87	78	71	65	60	55	52
	30	87	87	87	87	87	87	87	78	71	65	60	55	52
	40	77	77	77	77	77	77	77	77	71	65	60	55	52
	50	70	70	70	70	70	70	70	70	70	65	60	55	52
	60	64	64	64	64	64	64	64	64	64	64	60	55	52
	70	60	60	60	60	60	60	60	60	60	60	60	55	52
	80	56	56	56	56	56	56	56	56	56	56	56	55	52
	90	53	53	53	53	53	53	53	53	53	53	53	53	52
Zone 2	0	100	95	90	85	80	75	71	64	58	54	49	46	43
	10	100	95	90	85	80	75	71	64	58	54	49	46	43
	20	89	89	89	85	80	75	71	64	58	54	49	46	43
	30	87	87	87	85	80	75	71	64	58	54	49	46	43
	40	77	77	77	77	77	75	71	64	58	54	49	46	43
	50	70	70	70	70	70	70	70	64	58	54	49	46	43
	60	64	64	64	64	64	64	64	64	58	54	49	46	43
	70	60	60	60	60	60	60	60	60	58	54	49	46	43
	80	56	56	56	56	56	56	56	56	56	54	49	46	43
	90	53	53	53	53	53	53	53	53	53	53	49	46	43
Zone 3	0	85	79	74	69	65	61	58	52	48	44	41	38	36
	10	85	79	74	69	65	61	58	52	48	44	41	38	36
	20	85	79	74	69	65	61	58	52	48	44	41	38	36
	30	85	79	74	69	65	61	58	52	48	44	41	38	36
	40	77	77	74	69	65	61	58	52	48	44	41	38	36
	50	70	70	70	69	65	61	58	52	48	44	41	38	36
	60	64	64	64	64	64	61	58	52	48	44	41	38	36
	70	60	60	60	60	60	60	58	52	48	44	41	38	36
	80	56	56	56	56	56	56	56	52	48	44	41	38	36
	90	53	53	53	53	53	53	53	52	48	44	41	38	36

Notes:

1. Tables are based on critical rail span for load combinations as specified in chapter 2 of the ASCE 7-16 and allowable design loads per the 2015 Aluminum Design Manual.
2. Panels are assumed to be in portrait orientation with a maximum length of 67.5"

Structural ENGINUITY INC
Ingenuity in Engineering

SUNMODO®

Max Rail Spans for SunModo SMR200 Rail System

Table 4a

Mean Roof Height: h ≤ 15 ft
Roof Angle: 7 < θ ≤ 20 degrees
Exposure Category: B
Panel Orientation: Portrait
North/South Support Y_E = 1
Roof Type : Gable

Roof Wind Zone	Ground Snow Load (psf)	Wind Speed (mph)												
		90	95	100	105	110	115	120	130	140	150	160	170	180
Zones 1 & 2e	0	119	119	119	119	119	119	119	119	114	105	98	90	83
	10	107	107	107	107	107	107	107	107	107	105	98	90	83
	20	82	82	82	82	82	82	82	82	82	82	82	82	82
	30	82	82	82	82	82	82	82	82	82	82	82	82	82
	40	73	73	73	73	73	73	73	73	73	73	73	73	73
	50	66	66	66	66	66	66	66	66	66	66	66	66	66
	60	60	60	60	60	60	60	60	60	60	60	60	60	60
	70	56	56	56	56	56	56	56	56	56	56	56	56	56
	80	53	53	53	53	53	53	53	53	53	53	53	53	53
	90	50	50	50	50	50	50	50	50	50	50	50	50	50
Zones 2n, 2r, & 3e	0	119	119	119	119	119	118	113	104	98	89	82	75	69
	10	107	107	107	107	107	107	107	104	98	89	82	75	69
	20	82	82	82	82	82	82	82	82	82	82	82	75	69
	30	82	82	82	82	82	82	82	82	82	82	82	75	69
	40	73	73	73	73	73	73	73	73	73	73	73	73	69
	50	66	66	66	66	66	66	66	66	66	66	66	66	66
	60	60	60	60	60	60	60	60	60	60	60	60	60	60
	70	56	56	56	56	56	56	56	56	56	56	56	56	56
	80	53	53	53	53	53	53	53	53	53	53	53	53	53
	90	50	50	50	50	50	50	50	50	50	50	50	50	50
Zone 3r	0	119	119	119	118	113	108	104	96	87	79	72	66	61
	10	107	107	107	107	107	107	104	96	87	79	72	66	61
	20	82	82	82	82	82	82	82	82	82	79	72	66	61
	30	82	82	82	82	82	82	82	82	82	79	72	66	61
	40	73	73	73	73	73	73	73	73	73	73	72	66	61
	50	66	66	66	66	66	66	66	66	66	66	66	66	61
	60	60	60	60	60	60	60	60	60	60	60	60	60	60
	70	56	56	56	56	56	56	56	56	56	56	56	56	56
	80	53	53	53	53	53	53	53	53	53	53	53	53	53
	90	50	50	50	50	50	50	50	50	50	50	50	50	50

Notes:

1. Tables are based on critical rail span for load combinations as specified in chapter 2 of the ASCE 7-16 and allowable design loads per the 2015 Aluminum Design Manual.
2. Panels are assumed to be in portrait orientation with a maximum length of 67.5"

Structural ENGINUITY INC
Ingenuity in Engineering

SUNMODO®

Max Rail Spans for SunModo SMR200 Rail System

Table 4b

Mean Roof Height: h ≤ 15 ft
Roof Angle: 7 < θ ≤ 20 degrees
Exposure Category: B
Panel Orientation: Portrait
North/South Support γ_E = 1.5
Roof Type : Gable

Roof Wind Zone	Ground Snow Load (psf)	Wind Speed (mph)												
		90	95	100	105	110	115	120	130	140	150	160	170	180
Zones 1 & 2e	0	119	119	119	119	119	113	108	99	89	81	75	70	65
	10	107	107	107	107	107	107	107	99	89	81	75	70	65
	20	82	82	82	82	82	82	82	82	82	81	75	70	65
	30	82	82	82	82	82	82	82	82	82	81	75	70	65
	40	73	73	73	73	73	73	73	73	73	73	73	70	65
	50	66	66	66	66	66	66	66	66	66	66	66	66	65
	60	60	60	60	60	60	60	60	60	60	60	60	60	60
	70	56	56	56	56	56	56	56	56	56	56	56	56	56
	80	53	53	53	53	53	53	53	53	53	53	53	53	53
	90	50	50	50	50	50	50	50	50	50	50	50	50	50
Zones 2n, 2r, & 3e	0	119	116	111	106	101	97	92	82	74	67	62	57	53
	10	107	107	107	106	101	97	92	82	74	67	62	57	53
	20	82	82	82	82	82	82	82	82	74	67	62	57	53
	30	82	82	82	82	82	82	82	82	74	67	62	57	53
	40	73	73	73	73	73	73	73	73	73	67	62	57	53
	50	66	66	66	66	66	66	66	66	66	66	62	57	53
	60	60	60	60	60	60	60	60	60	60	60	60	57	53
	70	56	56	56	56	56	56	56	56	56	56	56	56	53
	80	53	53	53	53	53	53	53	53	53	53	53	53	53
	90	50	50	50	50	50	50	50	50	50	50	50	50	50
Zone 3r	0	113	107	102	97	92	86	81	73	66	60	55	50	47
	10	107	107	102	97	92	86	81	73	66	60	55	50	47
	20	82	82	82	82	82	82	81	73	66	60	55	50	47
	30	82	82	82	82	82	82	81	73	66	60	55	50	47
	40	73	73	73	73	73	73	73	73	66	60	55	50	47
	50	66	66	66	66	66	66	66	66	66	60	55	50	47
	60	60	60	60	60	60	60	60	60	60	60	55	50	47
	70	56	56	56	56	56	56	56	56	56	56	55	50	47
	80	53	53	53	53	53	53	53	53	53	53	53	50	47
	90	50	50	50	50	50	50	50	50	50	50	50	50	47

Notes:

1. Tables are based on critical rail span for load combinations as specified in chapter 2 of the ASCE 7-16 and allowable design loads per the 2015 Aluminum Design Manual.
2. Panels are assumed to be in portrait orientation with a maximum length of 67.5"

Max Rail Spans for SunModo SMR200 Rail System

Table 5a

Mean Roof Height: h ≤ 15 ft
Roof Angle: 7 < θ ≤ 20 degrees
Exposure Category: C
Panel Orientation: Portrait
North/South Support Y_E = 1
Roof Type : Gable

Roof Wind Zone	Ground Snow Load (psf)	Wind Speed (mph)												
		90	95	100	105	110	115	120	130	140	150	160	170	180
Zones 1 & 2e	0	119	119	119	119	119	113	108	99	89	81	75	70	65
	10	107	107	107	107	107	107	107	99	89	81	75	70	65
	20	82	82	82	82	82	82	82	82	82	81	75	70	65
	30	82	82	82	82	82	82	82	82	82	81	75	70	65
	40	73	73	73	73	73	73	73	73	73	73	73	70	65
	50	66	66	66	66	66	66	66	66	66	66	66	66	65
	60	60	60	60	60	60	60	60	60	60	60	60	60	60
	70	56	56	56	56	56	56	56	56	56	56	56	56	56
	80	53	53	53	53	53	53	53	53	53	53	53	53	53
	90	50	50	50	50	50	50	50	50	50	50	50	50	50
Zones 2n, 2r, & 3e	0	119	117	111	106	101	97	92	82	74	68	62	57	53
	10	107	107	107	106	101	97	92	82	74	68	62	57	53
	20	82	82	82	82	82	82	82	82	74	68	62	57	53
	30	82	82	82	82	82	82	82	82	74	68	62	57	53
	40	73	73	73	73	73	73	73	73	73	68	62	57	53
	50	66	66	66	66	66	66	66	66	66	66	62	57	53
	60	60	60	60	60	60	60	60	60	60	60	60	57	53
	70	56	56	56	56	56	56	56	56	56	56	56	56	53
	80	53	53	53	53	53	53	53	53	53	53	53	53	53
	90	50	50	50	50	50	50	50	50	50	50	50	50	50
Zone 3r	0	113	107	102	98	92	87	82	73	66	60	55	51	47
	10	107	107	102	98	92	87	82	73	66	60	55	51	47
	20	82	82	82	82	82	82	82	73	66	60	55	51	47
	30	82	82	82	82	82	82	82	73	66	60	55	51	47
	40	73	73	73	73	73	73	73	73	66	60	55	51	47
	50	66	66	66	66	66	66	66	66	66	60	55	51	47
	60	60	60	60	60	60	60	60	60	60	60	55	51	47
	70	56	56	56	56	56	56	56	56	56	56	55	51	47
	80	53	53	53	53	53	53	53	53	53	53	53	51	47
	90	50	50	50	50	50	50	50	50	50	50	50	50	47

Notes:

1. Tables are based on critical rail span for load combinations as specified in chapter 2 of the ASCE 7-16 and allowable design loads per the 2015 Aluminum Design Manual.
2. Panels are assumed to be in portrait orientation with a maximum length of 67.5"

Max Rail Spans for SunModo SMR200 Rail System

Table 5b

Mean Roof Height: h ≤ 15 ft
Roof Angle: 7 < θ ≤ 20 degrees
Exposure Category: C
Panel Orientation: Portrait
North/South Support γ_E = 1.5
Roof Type : Gable

Roof Wind Zone	Ground Snow Load (psf)	Wind Speed (mph)												
		90	95	100	105	110	115	120	130	140	150	160	170	180
Zones 1 & 2e	0	119	112	106	100	96	89	83	75	69	64	59	55	51
	10	107	107	106	100	96	89	83	75	69	64	59	55	51
	20	82	82	82	82	82	82	82	75	69	64	59	55	51
	30	82	82	82	82	82	82	82	75	69	64	59	55	51
	40	73	73	73	73	73	73	73	73	69	64	59	55	51
	50	66	66	66	66	66	66	66	66	66	64	59	55	51
	60	60	60	60	60	60	60	60	60	60	60	59	55	51
	70	56	56	56	56	56	56	56	56	56	56	56	55	51
	80	53	53	53	53	53	53	53	53	53	53	53	53	51
	90	50	50	50	50	50	50	50	50	50	50	50	50	50
Zones 2n, 2r, & 3e	0	101	96	90	84	78	74	70	62	56	52	47	44	41
	10	101	96	90	84	78	74	70	62	56	52	47	44	41
	20	82	82	82	82	78	74	70	62	56	52	47	44	41
	30	82	82	82	82	78	74	70	62	56	52	47	44	41
	40	73	73	73	73	73	73	70	62	56	52	47	44	41
	50	66	66	66	66	66	66	66	62	56	52	47	44	41
	60	60	60	60	60	60	60	60	60	56	52	47	44	41
	70	56	56	56	56	56	56	56	56	56	52	47	44	41
	80	53	53	53	53	53	53	53	53	53	52	47	44	41
	90	50	50	50	50	50	50	50	50	50	50	47	44	41
Zone 3r	0	92	85	79	74	69	65	62	55	50	46	42	40	37
	10	92	85	79	74	69	65	62	55	50	46	42	40	37
	20	82	82	79	74	69	65	62	55	50	46	42	40	37
	30	82	82	79	74	69	65	62	55	50	46	42	40	37
	40	73	73	73	73	69	65	62	55	50	46	42	40	37
	50	66	66	66	66	66	65	62	55	50	46	42	40	37
	60	60	60	60	60	60	60	60	55	50	46	42	40	37
	70	56	56	56	56	56	56	56	55	50	46	42	40	37
	80	53	53	53	53	53	53	53	53	50	46	42	40	37
	90	50	50	50	50	50	50	50	50	50	46	42	40	37

Notes:

1. Tables are based on critical rail span for load combinations as specified in chapter 2 of the ASCE 7-16 and allowable design loads per the 2015 Aluminum Design Manual.
2. Panels are assumed to be in portrait orientation with a maximum length of 67.5"

Structural ENGINUITY INC
Ingenuity in Engineering

SUNMODO®

Max Rail Spans for SunModo SMR200 Rail System

Table 6a

Mean Roof Height: h ≤ 15 ft
Roof Angle: 7 < θ ≤ 20 degrees
Exposure Category: D
Panel Orientation: Portrait
North/South Support Y_E = 1
Roof Type : Gable

Roof Wind Zone	Ground Snow Load (psf)	Wind Speed (mph)												
		90	95	100	105	110	115	120	130	140	150	160	170	180
Zones 1 & 2e	0	119	119	119	113	107	102	98	86	78	72	67	62	58
	10	107	107	107	107	107	102	98	86	78	72	67	62	58
	20	82	82	82	82	82	82	82	82	78	72	67	62	58
	30	82	82	82	82	82	82	82	82	78	72	67	62	58
	40	73	73	73	73	73	73	73	73	73	72	67	62	58
	50	66	66	66	66	66	66	66	66	66	66	66	62	58
	60	60	60	60	60	60	60	60	60	60	60	60	60	58
	70	56	56	56	56	56	56	56	56	56	56	56	56	56
	80	53	53	53	53	53	53	53	53	53	53	53	53	53
	90	50	50	50	50	50	50	50	50	50	50	50	50	50
Zones 2n, 2r, & 3e	0	112	106	101	97	91	86	81	72	65	59	54	50	47
	10	107	106	101	97	91	86	81	72	65	59	54	50	47
	20	82	82	82	82	82	82	81	72	65	59	54	50	47
	30	82	82	82	82	82	82	81	72	65	59	54	50	47
	40	73	73	73	73	73	73	73	72	65	59	54	50	47
	50	66	66	66	66	66	66	66	66	65	59	54	50	47
	60	60	60	60	60	60	60	60	60	60	59	54	50	47
	70	56	56	56	56	56	56	56	56	56	56	54	50	47
	80	53	53	53	53	53	53	53	53	53	53	53	50	47
	90	50	50	50	50	50	50	50	50	50	50	50	50	47
Zone 3r	0	103	98	92	86	81	76	71	64	58	53	48	45	42
	10	103	98	92	86	81	76	71	64	58	53	48	45	42
	20	82	82	82	82	81	76	71	64	58	53	48	45	42
	30	82	82	82	82	81	76	71	64	58	53	48	45	42
	40	73	73	73	73	73	73	71	64	58	53	48	45	42
	50	66	66	66	66	66	66	66	64	58	53	48	45	42
	60	60	60	60	60	60	60	60	60	58	53	48	45	42
	70	56	56	56	56	56	56	56	56	56	53	48	45	42
	80	53	53	53	53	53	53	53	53	53	53	48	45	42
	90	50	50	50	50	50	50	50	50	50	50	48	45	42

Notes:

1. Tables are based on critical rail span for load combinations as specified in chapter 2 of the ASCE 7-16 and allowable design loads per the 2015 Aluminum Design Manual.
2. Panels are assumed to be in portrait orientation with a maximum length of 67.5"

Structural ENGINUITY INC
Ingenuity in Engineering

SUNMODO®

Max Rail Spans for SunModo SMR200 Rail System

Table 6b

Mean Roof Height: h ≤ 15 ft
Roof Angle: 7 < θ ≤ 20 degrees
Exposure Category: D
Panel Orientation: Portrait
North/South Support γ_E = 1.5
Roof Type : Gable

Roof Wind Zone	Ground Snow Load (psf)	Wind Speed (mph)												
		90	95	100	105	110	115	120	130	140	150	160	170	180
Zones 1 & 2e	0	107	101	95	88	82	78	74	67	62	57	53	49	46
	10	107	101	95	88	82	78	74	67	62	57	53	49	46
	20	82	82	82	82	82	78	74	67	62	57	53	49	46
	30	82	82	82	82	82	78	74	67	62	57	53	49	46
	40	73	73	73	73	73	73	73	67	62	57	53	49	46
	50	66	66	66	66	66	66	66	66	62	57	53	49	46
	60	60	60	60	60	60	60	60	60	60	57	53	49	46
	70	56	56	56	56	56	56	56	56	56	56	53	49	46
	80	53	53	53	53	53	53	53	53	53	53	53	49	46
	90	50	50	50	50	50	50	50	50	50	50	50	49	46
Zones 2n, 2r, & 3e	0	91	84	78	73	69	65	61	55	50	45	42	39	37
	10	91	84	78	73	69	65	61	55	50	45	42	39	37
	20	82	82	78	73	69	65	61	55	50	45	42	39	37
	30	82	82	78	73	69	65	61	55	50	45	42	39	37
	40	73	73	73	73	69	65	61	55	50	45	42	39	37
	50	66	66	66	66	66	65	61	55	50	45	42	39	37
	60	60	60	60	60	60	60	60	55	50	45	42	39	37
	70	56	56	56	56	56	56	56	55	50	45	42	39	37
	80	53	53	53	53	53	53	53	53	50	45	42	39	37
	90	50	50	50	50	50	50	50	50	50	45	42	39	37
Zone 3r	0	80	74	69	65	61	57	54	49	44	41	38	36	34
	10	80	74	69	65	61	57	54	49	44	41	38	36	34
	20	80	74	69	65	61	57	54	49	44	41	38	36	34
	30	80	74	69	65	61	57	54	49	44	41	38	36	34
	40	73	73	69	65	61	57	54	49	44	41	38	36	34
	50	66	66	66	65	61	57	54	49	44	41	38	36	34
	60	60	60	60	60	60	57	54	49	44	41	38	36	34
	70	56	56	56	56	56	56	54	49	44	41	38	36	34
	80	53	53	53	53	53	53	53	49	44	41	38	36	34
	90	50	50	50	50	50	50	50	49	44	41	38	36	34

Notes:

1. Tables are based on critical rail span for load combinations as specified in chapter 2 of the ASCE 7-16 and allowable design loads per the 2015 Aluminum Design Manual.
2. Panels are assumed to be in portrait orientation with a maximum length of 67.5"

Max Rail Spans for SunModo SMR200 Rail System

Table 7a

Mean Roof Height: h ≤ 15 ft
Roof Angle: 20 < θ ≤ 27 degrees
Exposure Category: B
Panel Orientation: Portrait
North/South Support Y_E = 1
Roof Type : Gable

Roof Wind Zone	Ground Snow Load (psf)	Wind Speed (mph)												
		90	95	100	105	110	115	120	130	140	150	160	170	180
Zones 1 & 2e	0	119	119	119	119	119	119	119	119	119	116	109	104	98
	10	116	116	116	116	116	116	116	116	116	116	109	104	98
	20	97	97	97	97	97	97	97	97	97	97	97	96	95
	30	83	83	83	83	83	83	83	83	83	83	83	83	83
	40	73	73	73	73	73	73	73	73	73	73	73	73	73
	50	66	66	66	66	66	66	66	66	66	66	66	66	66
	60	61	61	61	61	61	61	61	61	61	61	61	61	61
	70	57	57	57	57	57	57	57	57	57	57	57	57	57
	80	53	53	53	53	53	53	53	53	53	53	53	53	53
	90	51	51	51	51	51	51	51	51	51	51	51	51	51
Zones 2n, 2r, & 3e	0	119	119	119	119	119	119	119	113	105	99	91	84	77
	10	116	116	116	116	116	116	116	113	105	99	91	84	77
	20	97	97	97	97	97	97	97	97	97	97	91	84	77
	30	83	83	83	83	83	83	83	83	83	83	83	83	77
	40	73	73	73	73	73	73	73	73	73	73	73	73	73
	50	66	66	66	66	66	66	66	66	66	66	66	66	66
	60	61	61	61	61	61	61	61	61	61	61	61	61	61
	70	57	57	57	57	57	57	57	57	57	57	57	57	57
	80	53	53	53	53	53	53	53	53	53	53	53	53	53
	90	51	51	51	51	51	51	51	51	51	51	51	51	51
Zone 3r	0	119	119	119	119	119	119	116	107	100	92	83	77	71
	10	116	116	116	116	116	116	116	107	100	92	83	77	71
	20	97	97	97	97	97	97	97	97	97	92	83	77	71
	30	83	83	83	83	83	83	83	83	83	83	83	77	71
	40	73	73	73	73	73	73	73	73	73	73	73	73	71
	50	66	66	66	66	66	66	66	66	66	66	66	66	66
	60	61	61	61	61	61	61	61	61	61	61	61	61	61
	70	57	57	57	57	57	57	57	57	57	57	57	57	57
	80	53	53	53	53	53	53	53	53	53	53	53	53	53
	90	51	51	51	51	51	51	51	51	51	51	51	51	51

Notes:

1. Tables are based on critical rail span for load combinations as specified in chapter 2 of the ASCE 7-16 and allowable design loads per the 2015 Aluminum Design Manual.
2. Panels are assumed to be in portrait orientation with a maximum length of 67.5"

Structural ENGINUITY INC
Ingenuity in Engineering

SUNMODO®

Max Rail Spans for SunModo SMR200 Rail System

Table 7b

Mean Roof Height: h ≤ 15 ft
Roof Angle: 20 < θ ≤ 27 degrees
Exposure Category: B
Panel Orientation: Portrait
North/South Support Y_E = 1.5
Roof Type : Gable

Roof Wind Zone	Ground Snow Load (psf)	Wind Speed (mph)												
		90	95	100	105	110	115	120	130	140	150	160	170	180
Zones 1 & 2e	0	119	119	119	119	119	119	119	110	103	96	88	82	77
	10	116	116	116	116	116	116	116	110	103	96	88	82	77
	20	97	97	97	97	97	97	97	97	97	96	88	82	77
	30	83	83	83	83	83	83	83	83	83	83	83	82	77
	40	73	73	73	73	73	73	73	73	73	73	73	73	73
	50	66	66	66	66	66	66	66	66	66	66	66	66	66
	60	61	61	61	61	61	61	61	61	61	61	61	61	61
	70	57	57	57	57	57	57	57	57	57	57	57	57	57
	80	53	53	53	53	53	53	53	53	53	53	53	53	53
	90	51	51	51	51	51	51	51	51	51	51	51	51	51
Zones 2n, 2r, & 3e	0	119	119	119	114	109	104	100	92	83	75	69	64	59
	10	116	116	116	114	109	104	100	92	83	75	69	64	59
	20	97	97	97	97	97	97	97	92	83	75	69	64	59
	30	83	83	83	83	83	83	83	83	83	75	69	64	59
	40	73	73	73	73	73	73	73	73	73	73	69	64	59
	50	66	66	66	66	66	66	66	66	66	66	66	64	59
	60	61	61	61	61	61	61	61	61	61	61	61	61	59
	70	57	57	57	57	57	57	57	57	57	57	57	57	57
	80	53	53	53	53	53	53	53	53	53	53	53	53	53
	90	51	51	51	51	51	51	51	51	51	51	51	51	51
Zone 3r	0	119	119	114	108	103	99	94	84	76	69	63	58	53
	10	116	116	114	108	103	99	94	84	76	69	63	58	53
	20	97	97	97	97	97	97	94	84	76	69	63	58	53
	30	83	83	83	83	83	83	83	83	76	69	63	58	53
	40	73	73	73	73	73	73	73	73	73	69	63	58	53
	50	66	66	66	66	66	66	66	66	66	66	63	58	53
	60	61	61	61	61	61	61	61	61	61	61	61	58	53
	70	57	57	57	57	57	57	57	57	57	57	57	57	53
	80	53	53	53	53	53	53	53	53	53	53	53	53	53
	90	51	51	51	51	51	51	51	51	51	51	51	51	51

Notes:

1. Tables are based on critical rail span for load combinations as specified in chapter 2 of the ASCE 7-16 and allowable design loads per the 2015 Aluminum Design Manual.
2. Panels are assumed to be in portrait orientation with a maximum length of 67.5"

Max Rail Spans for SunModo SMR200 Rail System

Table 8a

Mean Roof Height: h ≤ 15 ft
Roof Angle: 20 < θ ≤ 27 degrees
Exposure Category: C
Panel Orientation: Portrait
North/South Support Y_E = 1
Roof Type : Gable

Roof Wind Zone	Ground Snow Load (psf)	Wind Speed (mph)												
		90	95	100	105	110	115	120	130	140	150	160	170	180
Zones 1 & 2e	0	119	119	119	119	119	119	119	110	103	97	89	82	77
	10	116	116	116	116	116	116	116	110	103	97	89	82	77
	20	97	97	97	97	97	97	97	97	96	94	89	82	77
	30	83	83	83	83	83	83	83	83	83	83	82	81	77
	40	73	73	73	73	73	73	73	73	73	73	73	73	73
	50	66	66	66	66	66	66	66	66	66	66	66	66	66
	60	61	61	61	61	61	61	61	61	61	61	61	61	61
	70	57	57	57	57	57	57	57	57	57	57	57	57	57
	80	53	53	53	53	53	53	53	53	53	53	53	53	53
	90	51	51	51	51	51	51	51	51	51	51	51	51	51
Zones 2n, 2r, & 3e	0	119	119	119	114	109	105	101	92	83	76	69	64	59
	10	116	116	116	114	109	105	101	92	83	76	69	64	59
	20	97	97	97	97	97	97	97	92	83	76	69	64	59
	30	83	83	83	83	83	83	83	83	83	76	69	64	59
	40	73	73	73	73	73	73	73	73	73	73	69	64	59
	50	66	66	66	66	66	66	66	66	66	66	66	64	59
	60	61	61	61	61	61	61	61	61	61	61	61	61	59
	70	57	57	57	57	57	57	57	57	57	57	57	57	57
	80	53	53	53	53	53	53	53	53	53	53	53	53	53
	90	51	51	51	51	51	51	51	51	51	51	51	51	51
Zone 3r	0	119	119	114	109	104	99	95	84	76	69	63	58	54
	10	116	116	114	109	104	99	95	84	76	69	63	58	54
	20	97	97	97	97	97	97	95	84	76	69	63	58	54
	30	83	83	83	83	83	83	83	83	76	69	63	58	54
	40	73	73	73	73	73	73	73	73	73	69	63	58	54
	50	66	66	66	66	66	66	66	66	66	66	63	58	54
	60	61	61	61	61	61	61	61	61	61	61	61	58	54
	70	57	57	57	57	57	57	57	57	57	57	57	57	54
	80	53	53	53	53	53	53	53	53	53	53	53	53	53
	90	51	51	51	51	51	51	51	51	51	51	51	51	51

Notes:

1. Tables are based on critical rail span for load combinations as specified in chapter 2 of the ASCE 7-16 and allowable design loads per the 2015 Aluminum Design Manual.
2. Panels are assumed to be in portrait orientation with a maximum length of 67.5"

Structural ENGINUITY INC
Ingenuity in Engineering

SUNMODO®

Max Rail Spans for SunModo SMR200 Rail System

Table 8b

Mean Roof Height: h ≤ 15 ft
Roof Angle: 20 < θ ≤ 27 degrees
Exposure Category: C
Panel Orientation: Portrait
North/South Support γ_E = 1.5
Roof Type : Gable

Roof Wind Zone	Ground Snow Load (psf)	Wind Speed (mph)												
		90	95	100	105	110	115	120	130	140	150	160	170	180
Zones 1 & 2e	0	119	119	117	111	107	102	99	89	81	75	70	65	61
	10	116	116	116	111	107	102	99	89	81	75	70	65	61
	20	97	97	97	97	97	97	97	89	81	75	70	65	61
	30	83	83	83	83	83	83	83	83	81	75	70	65	61
	40	73	73	73	73	73	73	73	73	73	73	70	65	61
	50	66	66	66	66	66	66	66	66	66	66	66	65	61
	60	61	61	61	61	61	61	61	61	61	61	61	61	61
	70	57	57	57	57	57	57	57	57	57	57	57	57	57
	80	53	53	53	53	53	53	53	53	53	53	53	53	53
	90	51	51	51	51	51	51	51	51	51	51	51	51	51
Zones 2n, 2r, & 3e	0	109	104	99	93	87	82	78	70	63	58	53	49	46
	10	109	104	99	93	87	82	78	70	63	58	53	49	46
	20	97	97	97	93	87	82	78	70	63	58	53	49	46
	30	83	83	83	83	83	82	78	70	63	58	53	49	46
	40	73	73	73	73	73	73	73	70	63	58	53	49	46
	50	66	66	66	66	66	66	66	66	63	58	53	49	46
	60	61	61	61	61	61	61	61	61	61	58	53	49	46
	70	57	57	57	57	57	57	57	57	57	57	53	49	46
	80	53	53	53	53	53	53	53	53	53	53	53	49	46
	90	51	51	51	51	51	51	51	51	51	51	51	49	46
Zone 3r	0	104	98	92	86	80	75	71	63	57	52	48	44	41
	10	104	98	92	86	80	75	71	63	57	52	48	44	41
	20	97	97	92	86	80	75	71	63	57	52	48	44	41
	30	83	83	83	83	80	75	71	63	57	52	48	44	41
	40	73	73	73	73	73	73	71	63	57	52	48	44	41
	50	66	66	66	66	66	66	66	63	57	52	48	44	41
	60	61	61	61	61	61	61	61	61	57	52	48	44	41
	70	57	57	57	57	57	57	57	57	57	52	48	44	41
	80	53	53	53	53	53	53	53	53	53	52	48	44	41
	90	51	51	51	51	51	51	51	51	51	51	48	44	41

Notes:

1. Tables are based on critical rail span for load combinations as specified in chapter 2 of the ASCE 7-16 and allowable design loads per the 2015 Aluminum Design Manual.
2. Panels are assumed to be in portrait orientation with a maximum length of 67.5"

Max Rail Spans for SunModo SMR200 Rail System

Table 9a

Mean Roof Height: h ≤ 15 ft
Roof Angle: 20 < θ ≤ 27 degrees
Exposure Category: D
Panel Orientation: Portrait
North/South Support Y_E = 1
Roof Type : Gable

Roof Wind Zone	Ground Snow Load (psf)	Wind Speed (mph)												
		90	95	100	105	110	115	120	130	140	150	160	170	180
Zones 1 & 2e	0	119	119	119	119	118	113	109	101	93	85	79	73	69
	10	116	116	116	116	116	113	109	101	93	85	79	73	69
	20	97	97	97	97	97	97	97	95	93	85	79	73	69
	30	83	83	83	83	83	83	83	83	83	82	79	73	69
	40	73	73	73	73	73	73	73	73	73	73	73	72	69
	50	66	66	66	66	66	66	66	66	66	66	66	66	66
	60	61	61	61	61	61	61	61	61	61	61	61	61	61
	70	57	57	57	57	57	57	57	57	57	57	57	57	57
	80	53	53	53	53	53	53	53	53	53	53	53	53	53
	90	51	51	51	51	51	51	51	51	51	51	51	51	51
Zones 2n, 2r, & 3e	0	119	115	109	104	100	95	90	81	73	66	61	56	52
	10	116	115	109	104	100	95	90	81	73	66	61	56	52
	20	97	97	97	97	97	95	90	81	73	66	61	56	52
	30	83	83	83	83	83	83	83	81	73	66	61	56	52
	40	73	73	73	73	73	73	73	73	73	66	61	56	52
	50	66	66	66	66	66	66	66	66	66	66	61	56	52
	60	61	61	61	61	61	61	61	61	61	61	61	56	52
	70	57	57	57	57	57	57	57	57	57	57	57	56	52
	80	53	53	53	53	53	53	53	53	53	53	53	53	52
	90	51	51	51	51	51	51	51	51	51	51	51	51	51
Zone 3r	0	115	109	104	99	94	88	82	74	66	60	55	51	47
	10	115	109	104	99	94	88	82	74	66	60	55	51	47
	20	97	97	97	97	94	88	82	74	66	60	55	51	47
	30	83	83	83	83	83	83	82	74	66	60	55	51	47
	40	73	73	73	73	73	73	73	73	66	60	55	51	47
	50	66	66	66	66	66	66	66	66	66	60	55	51	47
	60	61	61	61	61	61	61	61	61	61	60	55	51	47
	70	57	57	57	57	57	57	57	57	57	57	55	51	47
	80	53	53	53	53	53	53	53	53	53	53	53	51	47
	90	51	51	51	51	51	51	51	51	51	51	51	51	47

Notes:

1. Tables are based on critical rail span for load combinations as specified in chapter 2 of the ASCE 7-16 and allowable design loads per the 2015 Aluminum Design Manual.
2. Panels are assumed to be in portrait orientation with a maximum length of 67.5"

Structural ENGINUITY INC
Ingenuity in Engineering

SUNMODO®

Max Rail Spans for SunModo SMR200 Rail System

Table 9b

Mean Roof Height: h ≤ 15 ft
Roof Angle: 20 < θ ≤ 27 degrees
Exposure Category: D
Panel Orientation: Portrait
North/South Support γ_E = 1.5
Roof Type : Gable

Roof Wind Zone	Ground Snow Load (psf)	Wind Speed (mph)												
		90	95	100	105	110	115	120	130	140	150	160	170	180
Zones 1 & 2e	0	118	112	107	102	98	93	88	79	73	67	62	58	54
	10	116	112	107	102	98	93	88	79	73	67	62	58	54
	20	97	97	97	97	97	93	88	79	73	67	62	58	54
	30	83	83	83	83	83	83	83	79	73	67	62	58	54
	40	73	73	73	73	73	73	73	73	73	67	62	58	54
	50	66	66	66	66	66	66	66	66	66	66	62	58	54
	60	61	61	61	61	61	61	61	61	61	61	61	58	54
	70	57	57	57	57	57	57	57	57	57	57	57	57	54
	80	53	53	53	53	53	53	53	53	53	53	53	53	53
	90	51	51	51	51	51	51	51	51	51	51	51	51	51
Zones 2n, 2r, & 3e	0	100	94	87	82	77	72	68	61	56	51	47	43	41
	10	100	94	87	82	77	72	68	61	56	51	47	43	41
	20	97	94	87	82	77	72	68	61	56	51	47	43	41
	30	83	83	83	82	77	72	68	61	56	51	47	43	41
	40	73	73	73	73	73	72	68	61	56	51	47	43	41
	50	66	66	66	66	66	66	66	61	56	51	47	43	41
	60	61	61	61	61	61	61	61	61	56	51	47	43	41
	70	57	57	57	57	57	57	57	57	56	51	47	43	41
	80	53	53	53	53	53	53	53	53	53	51	47	43	41
	90	51	51	51	51	51	51	51	51	51	51	47	43	41
Zone 3r	0	93	86	80	75	70	66	62	56	50	46	42	39	37
	10	93	86	80	75	70	66	62	56	50	46	42	39	37
	20	93	86	80	75	70	66	62	56	50	46	42	39	37
	30	83	83	80	75	70	66	62	56	50	46	42	39	37
	40	73	73	73	73	70	66	62	56	50	46	42	39	37
	50	66	66	66	66	66	66	62	56	50	46	42	39	37
	60	61	61	61	61	61	61	61	56	50	46	42	39	37
	70	57	57	57	57	57	57	57	56	50	46	42	39	37
	80	53	53	53	53	53	53	53	53	50	46	42	39	37
	90	51	51	51	51	51	51	51	51	50	46	42	39	37

Notes:

1. Tables are based on critical rail span for load combinations as specified in chapter 2 of the ASCE 7-16 and allowable design loads per the 2015 Aluminum Design Manual.
2. Panels are assumed to be in portrait orientation with a maximum length of 67.5"

Structural ENGINUITY INC
Ingenuity in Engineering

SUNMODO®

Max Rail Spans for SunModo SMR200 Rail System

Table 10a

Mean Roof Height: h ≤ 15 ft
Roof Angle: 27 < θ ≤ 45 degrees
Exposure Category: B
Panel Orientation: Portrait
North/South Support Y_E = 1
Roof Type : Gable

Roof Wind Zone	Ground Snow Load (psf)	Wind Speed (mph)												
		90	95	100	105	110	115	120	130	140	150	160	170	180
Zones 1, 2e, & 2r	0	119	119	119	119	119	119	119	119	119	117	110	104	97
	10	117	117	117	117	117	117	117	116	114	111	108	104	97
	20	101	101	101	101	101	101	101	99	97	96	94	92	90
	30	87	87	87	87	87	87	87	87	87	85	84	83	81
	40	77	77	77	77	77	77	77	77	77	77	77	76	74
	50	70	70	70	70	70	70	70	70	70	70	70	70	69
	60	65	65	65	65	65	65	65	65	65	65	65	65	65
	70	60	60	60	60	60	60	60	60	60	60	60	60	60
	80	57	57	57	57	57	57	57	57	57	57	57	57	57
	90	54	54	54	54	54	54	54	54	54	54	54	54	54
Zones 2n & 3r	0	119	119	119	119	119	119	119	119	114	107	101	93	86
	10	117	117	117	117	117	117	117	116	114	107	101	93	86
	20	101	101	101	101	101	101	101	99	97	96	94	92	86
	30	87	87	87	87	87	87	87	87	87	85	84	83	81
	40	77	77	77	77	77	77	77	77	77	77	77	76	74
	50	70	70	70	70	70	70	70	70	70	70	70	70	69
	60	65	65	65	65	65	65	65	65	65	65	65	65	65
	70	60	60	60	60	60	60	60	60	60	60	60	60	60
	80	57	57	57	57	57	57	57	57	57	57	57	57	57
	90	54	54	54	54	54	54	54	54	54	54	54	54	54
Zone 3e	0	119	119	119	119	119	119	119	110	103	95	88	81	75
	10	117	117	117	117	117	117	117	110	103	95	88	81	75
	20	101	101	101	101	101	101	101	99	97	95	88	81	75
	30	87	87	87	87	87	87	87	87	87	85	84	81	75
	40	77	77	77	77	77	77	77	77	77	77	77	76	74
	50	70	70	70	70	70	70	70	70	70	70	70	70	69
	60	65	65	65	65	65	65	65	65	65	65	65	65	65
	70	60	60	60	60	60	60	60	60	60	60	60	60	60
	80	57	57	57	57	57	57	57	57	57	57	57	57	57
	90	54	54	54	54	54	54	54	54	54	54	54	54	54

Notes:

1. Tables are based on critical rail span for load combinations as specified in chapter 2 of the ASCE 7-16 and allowable design loads per the 2015 Aluminum Design Manual.
2. Panels are assumed to be in portrait orientation with a maximum length of 67.5"

Structural ENGINUITY INC
Ingenuity in Engineering

SUNMODO®

Max Rail Spans for SunModo SMR200 Rail System

Table 10b

Mean Roof Height: h ≤ 15 ft
Roof Angle: 27 < θ ≤ 45 degrees
Exposure Category: B
Panel Orientation: Portrait
North/South Support γ_E = 1.5
Roof Type : Gable

Roof Wind Zone	Ground Snow Load (psf)	Wind Speed (mph)												
		90	95	100	105	110	115	120	130	140	150	160	170	180
Zones 1, 2e, & 2r	0	119	119	119	119	119	119	119	110	103	94	86	79	74
	10	117	117	117	117	117	117	117	110	103	94	86	79	74
	20	101	101	101	101	101	101	101	99	97	94	86	79	74
	30	87	87	87	87	87	87	87	87	87	85	84	79	74
	40	77	77	77	77	77	77	77	77	77	77	77	76	74
	50	70	70	70	70	70	70	70	70	70	70	70	70	69
	60	65	65	65	65	65	65	65	65	65	65	65	65	65
	70	60	60	60	60	60	60	60	60	60	60	60	60	60
	80	57	57	57	57	57	57	57	57	57	57	57	57	57
	90	54	54	54	54	54	54	54	54	54	54	54	54	54
Zones 2n & 3r	0	119	119	119	119	118	113	109	101	92	84	78	72	67
	10	117	117	117	117	117	113	109	101	92	84	78	72	67
	20	101	101	101	101	101	101	101	99	92	84	78	72	67
	30	87	87	87	87	87	87	87	87	87	84	78	72	67
	40	77	77	77	77	77	77	77	77	77	77	77	72	67
	50	70	70	70	70	70	70	70	70	70	70	70	70	67
	60	65	65	65	65	65	65	65	65	65	65	65	65	65
	70	60	60	60	60	60	60	60	60	60	60	60	60	60
	80	57	57	57	57	57	57	57	57	57	57	57	57	57
	90	54	54	54	54	54	54	54	54	54	54	54	54	54
Zone 3e	0	119	119	117	111	107	103	98	88	80	73	68	63	58
	10	117	117	117	111	107	103	98	88	80	73	68	63	58
	20	101	101	101	101	101	101	98	88	80	73	68	63	58
	30	87	87	87	87	87	87	87	87	80	73	68	63	58
	40	77	77	77	77	77	77	77	77	77	73	68	63	58
	50	70	70	70	70	70	70	70	70	70	70	68	63	58
	60	65	65	65	65	65	65	65	65	65	65	65	63	58
	70	60	60	60	60	60	60	60	60	60	60	60	60	58
	80	57	57	57	57	57	57	57	57	57	57	57	57	57
	90	54	54	54	54	54	54	54	54	54	54	54	54	54

Notes:

1. Tables are based on critical rail span for load combinations as specified in chapter 2 of the ASCE 7-16 and allowable design loads per the 2015 Aluminum Design Manual.
2. Panels are assumed to be in portrait orientation with a maximum length of 67.5"

Structural ENGINUITY INC
Ingenuity in Engineering

SUNMODO®

Max Rail Spans for SunModo SMR200 Rail System

Table 11a

Mean Roof Height: h ≤ 15 ft
Roof Angle: 27 < θ ≤ 45 degrees
Exposure Category: C
Panel Orientation: Portrait
North/South Support Y_E = 1
Roof Type : Gable

Roof Wind Zone	Ground Snow Load (psf)	Wind Speed (mph)												
		90	95	100	105	110	115	120	130	140	150	160	170	180
Zones 1, 2e, & 2r	0	119	119	119	119	119	119	119	111	103	95	87	80	74
	10	117	117	117	117	115	113	112	109	103	95	87	80	74
	20	101	101	100	99	98	97	96	94	92	89	87	80	74
	30	87	87	87	87	87	87	86	84	82	81	79	77	74
	40	77	77	77	77	77	77	77	77	76	74	73	71	70
	50	70	70	70	70	70	70	70	70	70	69	68	67	65
	60	65	65	65	65	65	65	65	65	65	65	64	63	62
	70	60	60	60	60	60	60	60	60	60	60	60	60	59
	80	57	57	57	57	57	57	57	57	57	57	57	57	56
	90	54	54	54	54	54	54	54	54	54	54	54	54	54
Zones 2n & 3r	0	119	119	119	119	118	113	109	101	92	85	78	72	67
	10	117	117	117	117	115	113	109	101	92	85	78	72	67
	20	101	101	100	99	98	97	96	94	92	85	78	72	67
	30	87	87	87	87	87	87	86	84	82	81	78	72	67
	40	77	77	77	77	77	77	77	77	76	74	73	71	67
	50	70	70	70	70	70	70	70	70	70	69	68	67	65
	60	65	65	65	65	65	65	65	65	65	65	64	63	62
	70	60	60	60	60	60	60	60	60	60	60	60	60	59
	80	57	57	57	57	57	57	57	57	57	57	57	57	56
	90	54	54	54	54	54	54	54	54	54	54	54	54	54
Zone 3e	0	119	119	117	112	107	103	98	89	81	74	68	63	58
	10	117	117	117	112	107	103	98	89	81	74	68	63	58
	20	101	101	100	99	98	97	96	89	81	74	68	63	58
	30	87	87	87	87	87	87	86	84	81	74	68	63	58
	40	77	77	77	77	77	77	77	77	76	74	68	63	58
	50	70	70	70	70	70	70	70	70	70	69	68	63	58
	60	65	65	65	65	65	65	65	65	65	65	64	63	58
	70	60	60	60	60	60	60	60	60	60	60	60	60	58
	80	57	57	57	57	57	57	57	57	57	57	57	57	56
	90	54	54	54	54	54	54	54	54	54	54	54	54	54

Notes:

1. Tables are based on critical rail span for load combinations as specified in chapter 2 of the ASCE 7-16 and allowable design loads per the 2015 Aluminum Design Manual.
2. Panels are assumed to be in portrait orientation with a maximum length of 67.5"

Structural ENGINUITY INC
Ingenuity in Engineering

SUNMODO®

Max Rail Spans for SunModo SMR200 Rail System

Table 11b

Mean Roof Height: h ≤ 15 ft
Roof Angle: 27 < θ ≤ 45 degrees
Exposure Category: C
Panel Orientation: Portrait
North/South Support γ_E = 1.5
Roof Type : Gable

Roof Wind Zone	Ground Snow Load (psf)	Wind Speed (mph)												
		90	95	100	105	110	115	120	130	140	150	160	170	180
Zones 1, 2e, & 2r	0	119	119	117	112	107	103	97	87	79	72	66	61	56
	10	117	117	117	112	107	103	97	87	79	72	66	61	56
	20	101	101	100	99	98	97	96	87	79	72	66	61	56
	30	87	87	87	87	87	87	86	84	79	72	66	61	56
	40	77	77	77	77	77	77	77	77	76	72	66	61	56
	50	70	70	70	70	70	70	70	70	70	69	66	61	56
	60	65	65	65	65	65	65	65	65	65	65	64	61	56
	70	60	60	60	60	60	60	60	60	60	60	60	60	56
	80	57	57	57	57	57	57	57	57	57	57	57	57	56
	90	54	54	54	54	54	54	54	54	54	54	54	54	54
Zones 2n & 3r	0	118	112	107	102	97	92	87	78	71	65	60	56	52
	10	117	112	107	102	97	92	87	78	71	65	60	56	52
	20	101	101	100	99	97	92	87	78	71	65	60	56	52
	30	87	87	87	87	87	87	86	78	71	65	60	56	52
	40	77	77	77	77	77	77	77	77	71	65	60	56	52
	50	70	70	70	70	70	70	70	70	70	65	60	56	52
	60	65	65	65	65	65	65	65	65	65	65	60	56	52
	70	60	60	60	60	60	60	60	60	60	60	60	56	52
	80	57	57	57	57	57	57	57	57	57	57	57	56	52
	90	54	54	54	54	54	54	54	54	54	54	54	54	52
Zone 3e	0	107	102	96	90	85	80	76	68	62	57	53	49	45
	10	107	102	96	90	85	80	76	68	62	57	53	49	45
	20	101	101	96	90	85	80	76	68	62	57	53	49	45
	30	87	87	87	87	85	80	76	68	62	57	53	49	45
	40	77	77	77	77	77	77	76	68	62	57	53	49	45
	50	70	70	70	70	70	70	70	68	62	57	53	49	45
	60	65	65	65	65	65	65	65	65	62	57	53	49	45
	70	60	60	60	60	60	60	60	60	60	57	53	49	45
	80	57	57	57	57	57	57	57	57	57	57	53	49	45
	90	54	54	54	54	54	54	54	54	54	54	53	49	45

Notes:

1. Tables are based on critical rail span for load combinations as specified in chapter 2 of the ASCE 7-16 and allowable design loads per the 2015 Aluminum Design Manual.
2. Panels are assumed to be in portrait orientation with a maximum length of 67.5"

Structural ENGINUITY INC
Ingenuity in Engineering

SUNMODO®

Max Rail Spans for SunModo SMR200 Rail System

Table 12a

Mean Roof Height: h ≤ 15 ft
Roof Angle: 27 < θ ≤ 45 degrees
Exposure Category: D
Panel Orientation: Portrait
North/South Support Y_E = 1
Roof Type : Gable

Roof Wind Zone	Ground Snow Load (psf)	Wind Speed (mph)												
		90	95	100	105	110	115	120	130	140	150	160	170	180
Zones 1, 2e, & 2r	0	119	119	119	119	119	113	109	101	91	83	76	70	65
	10	117	117	115	113	112	110	108	101	91	83	76	70	65
	20	101	99	98	97	96	95	93	91	88	83	76	70	65
	30	87	87	87	86	86	85	84	82	80	78	76	70	65
	40	77	77	77	77	77	77	77	75	74	72	70	69	65
	50	70	70	70	70	70	70	70	70	68	67	66	64	63
	60	65	65	65	65	65	65	65	65	64	63	62	61	60
	70	60	60	60	60	60	60	60	60	60	60	59	58	57
	80	57	57	57	57	57	57	57	57	57	57	56	55	54
	90	54	54	54	54	54	54	54	54	54	54	54	53	52
Zones 2n & 3r	0	119	119	118	113	108	104	99	90	82	75	69	64	59
	10	117	117	115	113	108	104	99	90	82	75	69	64	59
	20	101	99	98	97	96	95	93	90	82	75	69	64	59
	30	87	87	87	86	86	85	84	82	80	75	69	64	59
	40	77	77	77	77	77	77	77	75	74	72	69	64	59
	50	70	70	70	70	70	70	70	70	68	67	66	64	59
	60	65	65	65	65	65	65	65	65	64	63	62	61	59
	70	60	60	60	60	60	60	60	60	60	60	59	58	57
	80	57	57	57	57	57	57	57	57	57	57	56	55	54
	90	54	54	54	54	54	54	54	54	54	54	54	53	52
Zone 3e	0	118	112	107	103	97	92	87	78	71	65	60	56	52
	10	117	112	107	103	97	92	87	78	71	65	60	56	52
	20	101	99	98	97	96	92	87	78	71	65	60	56	52
	30	87	87	87	86	86	85	84	78	71	65	60	56	52
	40	77	77	77	77	77	77	77	75	71	65	60	56	52
	50	70	70	70	70	70	70	70	70	68	65	60	56	52
	60	65	65	65	65	65	65	65	65	64	63	60	56	52
	70	60	60	60	60	60	60	60	60	60	60	59	56	52
	80	57	57	57	57	57	57	57	57	57	57	56	55	52
	90	54	54	54	54	54	54	54	54	54	54	54	53	52

Notes:

1. Tables are based on critical rail span for load combinations as specified in chapter 2 of the ASCE 7-16 and allowable design loads per the 2015 Aluminum Design Manual.
2. Panels are assumed to be in portrait orientation with a maximum length of 67.5"

Structural ENGINUITY INC
Ingenuity in Engineering

SUNMODO®

Max Rail Spans for SunModo SMR200 Rail System

Table 12b

Mean Roof Height: h ≤ 15 ft
Roof Angle: 27 < θ ≤ 45 degrees
Exposure Category: D
Panel Orientation: Portrait
North/South Support Y_E = 1.5
Roof Type : Gable

Roof Wind Zone	Ground Snow Load (psf)	Wind Speed (mph)												
		90	95	100	105	110	115	120	130	140	150	160	170	180
Zones 1, 2e, & 2r	0	118	112	107	102	96	90	85	77	69	63	58	53	50
	10	117	112	107	102	96	90	85	77	69	63	58	53	50
	20	101	99	98	97	96	90	85	77	69	63	58	53	50
	30	87	87	87	86	86	85	84	77	69	63	58	53	50
	40	77	77	77	77	77	77	77	75	69	63	58	53	50
	50	70	70	70	70	70	70	70	70	68	63	58	53	50
	60	65	65	65	65	65	65	65	65	64	63	58	53	50
	70	60	60	60	60	60	60	60	60	60	60	58	53	50
	80	57	57	57	57	57	57	57	57	57	57	56	53	50
	90	54	54	54	54	54	54	54	54	54	54	54	53	50
Zones 2n & 3r	0	108	103	97	91	86	81	77	69	63	58	53	49	46
	10	108	103	97	91	86	81	77	69	63	58	53	49	46
	20	101	99	97	91	86	81	77	69	63	58	53	49	46
	30	87	87	87	86	86	81	77	69	63	58	53	49	46
	40	77	77	77	77	77	77	77	69	63	58	53	49	46
	50	70	70	70	70	70	70	70	69	63	58	53	49	46
	60	65	65	65	65	65	65	65	65	63	58	53	49	46
	70	60	60	60	60	60	60	60	60	60	58	53	49	46
	80	57	57	57	57	57	57	57	57	57	57	53	49	46
	90	54	54	54	54	54	54	54	54	54	54	53	49	46
Zone 3e	0	97	90	85	79	75	71	67	60	55	50	47	43	40
	10	97	90	85	79	75	71	67	60	55	50	47	43	40
	20	97	90	85	79	75	71	67	60	55	50	47	43	40
	30	87	87	85	79	75	71	67	60	55	50	47	43	40
	40	77	77	77	77	75	71	67	60	55	50	47	43	40
	50	70	70	70	70	70	70	67	60	55	50	47	43	40
	60	65	65	65	65	65	65	65	60	55	50	47	43	40
	70	60	60	60	60	60	60	60	60	55	50	47	43	40
	80	57	57	57	57	57	57	57	57	55	50	47	43	40
	90	54	54	54	54	54	54	54	54	54	50	47	43	40

Notes:

1. Tables are based on critical rail span for load combinations as specified in chapter 2 of the ASCE 7-16 and allowable design loads per the 2015 Aluminum Design Manual.
2. Panels are assumed to be in portrait orientation with a maximum length of 67.5"

Max Rail Spans for SunModo SMR200 Rail System

Table 13a

Mean Roof Height: h ≤ 15 ft
Roof Angle: 7 < θ ≤ 20 degrees
Exposure Category: B
Panel Orientation: Portrait
North/South Support Y_E = 1
Roof Type : Hip h/B = ≥ 0.8

Roof Wind Zone	Ground Snow Load (psf)	Wind Speed (mph)												
		90	95	100	105	110	115	120	130	140	150	160	170	180
Zone 1	0	119	119	119	119	119	119	119	119	116	108	102	96	89
	10	107	107	107	107	107	107	107	107	106	105	102	96	89
	20	82	82	82	82	82	82	82	82	82	82	82	82	81
	30	82	82	82	82	82	82	82	82	82	82	82	82	81
	40	73	73	73	73	73	73	73	73	73	73	73	73	73
	50	66	66	66	66	66	66	66	66	66	66	66	66	66
	60	60	60	60	60	60	60	60	60	60	60	60	60	60
	70	56	56	56	56	56	56	56	56	56	56	56	56	56
	80	53	53	53	53	53	53	53	53	53	53	53	53	53
	90	50	50	50	50	50	50	50	50	50	50	50	50	50
Zone 2r	0	119	119	119	119	119	119	119	113	105	99	92	85	79
	10	107	107	107	107	107	107	107	107	105	99	92	85	79
	20	82	82	82	82	82	82	82	82	82	82	82	82	79
	30	82	82	82	82	82	82	82	82	82	82	82	82	79
	40	73	73	73	73	73	73	73	73	73	73	73	73	73
	50	66	66	66	66	66	66	66	66	66	66	66	66	66
	60	60	60	60	60	60	60	60	60	60	60	60	60	60
	70	56	56	56	56	56	56	56	56	56	56	56	56	56
	80	53	53	53	53	53	53	53	53	53	53	53	53	53
	90	50	50	50	50	50	50	50	50	50	50	50	50	50
Zones 2e & 3	0	119	119	119	119	119	119	117	109	102	96	87	81	75
	10	107	107	107	107	107	107	107	107	102	96	87	81	75
	20	82	82	82	82	82	82	82	82	82	82	82	81	75
	30	82	82	82	82	82	82	82	82	82	82	82	81	75
	40	73	73	73	73	73	73	73	73	73	73	73	73	73
	50	66	66	66	66	66	66	66	66	66	66	66	66	66
	60	60	60	60	60	60	60	60	60	60	60	60	60	60
	70	56	56	56	56	56	56	56	56	56	56	56	56	56
	80	53	53	53	53	53	53	53	53	53	53	53	53	53
	90	50	50	50	50	50	50	50	50	50	50	50	50	50

Notes:

1. Tables are based on critical rail span for load combinations as specified in chapter 2 of the ASCE 7-16 and allowable design loads per the 2015 Aluminum Design Manual.
2. Panels are assumed to be in portrait orientation with a maximum length of 67.5"

Max Rail Spans for SunModo SMR200 Rail System

Table 13b

Mean Roof Height: h ≤ 15 ft
Roof Angle: 7 < θ ≤ 20 degrees
Exposure Category: B

Panel Orientation: Portrait
North/South Support γ_E = 1.5
Roof Type : Hip h/B = ≥ 0.8

Roof Wind Zone	Ground Snow Load (psf)	Wind Speed (mph)												
		90	95	100	105	110	115	120	130	140	150	160	170	180
Zone 1	0	119	119	119	119	119	115	111	102	96	86	80	74	69
	10	107	107	107	107	107	107	107	102	96	86	80	74	69
	20	82	82	82	82	82	82	82	82	82	82	80	74	69
	30	82	82	82	82	82	82	82	82	82	82	80	74	69
	40	73	73	73	73	73	73	73	73	73	73	73	73	69
	50	66	66	66	66	66	66	66	66	66	66	66	66	66
	60	60	60	60	60	60	60	60	60	60	60	60	60	60
	70	56	56	56	56	56	56	56	56	56	56	56	56	56
	80	53	53	53	53	53	53	53	53	53	53	53	53	53
	90	50	50	50	50	50	50	50	50	50	50	50	50	50
Zone 2r	0	119	119	119	114	109	105	101	93	84	77	70	65	60
	10	107	107	107	107	107	105	101	93	84	77	70	65	60
	20	82	82	82	82	82	82	82	82	82	77	70	65	60
	30	82	82	82	82	82	82	82	82	82	77	70	65	60
	40	73	73	73	73	73	73	73	73	73	73	70	65	60
	50	66	66	66	66	66	66	66	66	66	66	66	65	60
	60	60	60	60	60	60	60	60	60	60	60	60	60	60
	70	56	56	56	56	56	56	56	56	56	56	56	56	56
	80	53	53	53	53	53	53	53	53	53	53	53	53	53
	90	50	50	50	50	50	50	50	50	50	50	50	50	50
Zones 2e & 3	0	119	119	115	110	105	101	97	88	80	73	67	62	57
	10	107	107	107	107	105	101	97	88	80	73	67	62	57
	20	82	82	82	82	82	82	82	82	80	73	67	62	57
	30	82	82	82	82	82	82	82	82	80	73	67	62	57
	40	73	73	73	73	73	73	73	73	73	73	67	62	57
	50	66	66	66	66	66	66	66	66	66	66	66	62	57
	60	60	60	60	60	60	60	60	60	60	60	60	60	57
	70	56	56	56	56	56	56	56	56	56	56	56	56	56
	80	53	53	53	53	53	53	53	53	53	53	53	53	53
	90	50	50	50	50	50	50	50	50	50	50	50	50	50

Notes:

1. Tables are based on critical rail span for load combinations as specified in chapter 2 of the ASCE 7-16 and allowable design loads per the 2015 Aluminum Design Manual.
2. Panels are assumed to be in portrait orientation with a maximum length of 67.5"

Max Rail Spans for SunModo SMR200 Rail System

Table 14a

Mean Roof Height: h ≤ 15 ft
Roof Angle: 7 < θ ≤ 20 degrees
Exposure Category: C
Panel Orientation: Portrait
North/South Support Y_E = 1
Roof Type : Hip h/B = ≥ 0.8

Roof Wind Zone	Ground Snow Load (psf)	Wind Speed (mph)												
		90	95	100	105	110	115	120	130	140	150	160	170	180
Zone 1	0	119	119	119	119	119	116	111	103	96	87	80	74	69
	10	107	107	107	107	107	106	105	103	96	87	80	74	69
	20	82	82	82	82	82	82	82	82	82	81	80	74	69
	30	82	82	82	82	82	82	82	82	82	81	80	74	69
	40	73	73	73	73	73	73	73	73	73	73	72	71	69
	50	66	66	66	66	66	66	66	66	66	66	66	66	65
	60	60	60	60	60	60	60	60	60	60	60	60	60	60
	70	56	56	56	56	56	56	56	56	56	56	56	56	56
	80	53	53	53	53	53	53	53	53	53	53	53	53	53
	90	50	50	50	50	50	50	50	50	50	50	50	50	50
Zone 2r	0	119	119	119	114	109	105	101	93	84	77	71	65	61
	10	107	107	107	107	107	105	101	93	84	77	71	65	61
	20	82	82	82	82	82	82	82	82	82	77	71	65	61
	30	82	82	82	82	82	82	82	82	82	77	71	65	61
	40	73	73	73	73	73	73	73	73	73	73	71	65	61
	50	66	66	66	66	66	66	66	66	66	66	66	65	61
	60	60	60	60	60	60	60	60	60	60	60	60	60	60
	70	56	56	56	56	56	56	56	56	56	56	56	56	56
	80	53	53	53	53	53	53	53	53	53	53	53	53	53
	90	50	50	50	50	50	50	50	50	50	50	50	50	50
Zones 2e & 3	0	119	119	115	110	105	101	98	88	80	73	67	62	58
	10	107	107	107	107	105	101	98	88	80	73	67	62	58
	20	82	82	82	82	82	82	82	82	80	73	67	62	58
	30	82	82	82	82	82	82	82	82	80	73	67	62	58
	40	73	73	73	73	73	73	73	73	73	73	67	62	58
	50	66	66	66	66	66	66	66	66	66	66	66	62	58
	60	60	60	60	60	60	60	60	60	60	60	60	60	58
	70	56	56	56	56	56	56	56	56	56	56	56	56	56
	80	53	53	53	53	53	53	53	53	53	53	53	53	53
	90	50	50	50	50	50	50	50	50	50	50	50	50	50

Notes:

1. Tables are based on critical rail span for load combinations as specified in chapter 2 of the ASCE 7-16 and allowable design loads per the 2015 Aluminum Design Manual.
2. Panels are assumed to be in portrait orientation with a maximum length of 67.5"

Max Rail Spans for SunModo SMR200 Rail System

Table 14b

Mean Roof Height: h ≤ 15 ft
Roof Angle: 7 < θ ≤ 20 degrees
Exposure Category: C
Panel Orientation: Portrait
North/South Support γ_E = 1.5
Roof Type : Hip h/B = ≥ 0.8

Roof Wind Zone	Ground Snow Load (psf)	Wind Speed (mph)												
		90	95	100	105	110	115	120	130	140	150	160	170	180
Zone 1	0	119	114	109	104	99	95	89	80	74	68	63	59	55
	10	107	107	107	104	99	95	89	80	74	68	63	59	55
	20	82	82	82	82	82	82	82	80	74	68	63	59	55
	30	82	82	82	82	82	82	82	80	74	68	63	59	55
	40	73	73	73	73	73	73	73	73	73	68	63	59	55
	50	66	66	66	66	66	66	66	66	66	66	63	59	55
	60	60	60	60	60	60	60	60	60	60	60	60	59	55
	70	56	56	56	56	56	56	56	56	56	56	56	56	55
	80	53	53	53	53	53	53	53	53	53	53	53	53	53
	90	50	50	50	50	50	50	50	50	50	50	50	50	50
Zone 2r	0	109	104	99	95	89	84	79	71	65	59	54	50	47
	10	107	104	99	95	89	84	79	71	65	59	54	50	47
	20	82	82	82	82	82	82	79	71	65	59	54	50	47
	30	82	82	82	82	82	82	79	71	65	59	54	50	47
	40	73	73	73	73	73	73	73	71	65	59	54	50	47
	50	66	66	66	66	66	66	66	66	65	59	54	50	47
	60	60	60	60	60	60	60	60	60	60	59	54	50	47
	70	56	56	56	56	56	56	56	56	56	56	54	50	47
	80	53	53	53	53	53	53	53	53	53	53	53	50	47
	90	50	50	50	50	50	50	50	50	50	50	50	50	47
Zones 2e & 3	0	105	100	96	90	84	79	75	67	61	56	52	48	44
	10	105	100	96	90	84	79	75	67	61	56	52	48	44
	20	82	82	82	82	82	79	75	67	61	56	52	48	44
	30	82	82	82	82	82	79	75	67	61	56	52	48	44
	40	73	73	73	73	73	73	73	67	61	56	52	48	44
	50	66	66	66	66	66	66	66	66	61	56	52	48	44
	60	60	60	60	60	60	60	60	60	60	56	52	48	44
	70	56	56	56	56	56	56	56	56	56	56	52	48	44
	80	53	53	53	53	53	53	53	53	53	53	52	48	44
	90	50	50	50	50	50	50	50	50	50	50	50	48	44

Notes:

1. Tables are based on critical rail span for load combinations as specified in chapter 2 of the ASCE 7-16 and allowable design loads per the 2015 Aluminum Design Manual.
2. Panels are assumed to be in portrait orientation with a maximum length of 67.5"

Max Rail Spans for SunModo SMR200 Rail System

Table 15a

Mean Roof Height: h ≤ 15 ft
Roof Angle: 7 < θ ≤ 20 degrees
Exposure Category: D
Panel Orientation: Portrait
North/South Support Y_E = 1
Roof Type : Hip h/B = ≥ 0.8

Roof Wind Zone	Ground Snow Load (psf)	Wind Speed (mph)												
		90	95	100	105	110	115	120	130	140	150	160	170	180
Zone 1	0	119	119	119	115	110	105	101	93	84	77	71	66	62
	10	107	107	107	106	105	104	101	93	84	77	71	66	62
	20	82	82	82	82	82	82	82	82	80	77	71	66	62
	30	82	82	82	82	82	82	82	82	80	77	71	66	62
	40	73	73	73	73	73	73	73	73	73	72	71	66	62
	50	66	66	66	66	66	66	66	66	66	66	65	64	62
	60	60	60	60	60	60	60	60	60	60	60	60	60	59
	70	56	56	56	56	56	56	56	56	56	56	56	56	56
	80	53	53	53	53	53	53	53	53	53	53	53	53	53
	90	50	50	50	50	50	50	50	50	50	50	50	50	50
Zone 2r	0	119	115	109	104	100	96	91	82	74	68	62	58	54
	10	107	107	107	104	100	96	91	82	74	68	62	58	54
	20	82	82	82	82	82	82	82	82	74	68	62	58	54
	30	82	82	82	82	82	82	82	82	74	68	62	58	54
	40	73	73	73	73	73	73	73	73	73	68	62	58	54
	50	66	66	66	66	66	66	66	66	66	66	62	58	54
	60	60	60	60	60	60	60	60	60	60	60	60	58	54
	70	56	56	56	56	56	56	56	56	56	56	56	56	54
	80	53	53	53	53	53	53	53	53	53	53	53	53	53
	90	50	50	50	50	50	50	50	50	50	50	50	50	50
Zones 2e & 3	0	116	111	105	101	97	92	87	78	70	64	59	55	51
	10	107	107	105	101	97	92	87	78	70	64	59	55	51
	20	82	82	82	82	82	82	82	78	70	64	59	55	51
	30	82	82	82	82	82	82	82	78	70	64	59	55	51
	40	73	73	73	73	73	73	73	73	70	64	59	55	51
	50	66	66	66	66	66	66	66	66	66	64	59	55	51
	60	60	60	60	60	60	60	60	60	60	60	59	55	51
	70	56	56	56	56	56	56	56	56	56	56	56	55	51
	80	53	53	53	53	53	53	53	53	53	53	53	53	51
	90	50	50	50	50	50	50	50	50	50	50	50	50	50

Notes:

1. Tables are based on critical rail span for load combinations as specified in chapter 2 of the ASCE 7-16 and allowable design loads per the 2015 Aluminum Design Manual.
2. Panels are assumed to be in portrait orientation with a maximum length of 67.5"

Max Rail Spans for SunModo SMR200 Rail System

Table 15b

Mean Roof Height: h ≤ 15 ft
Roof Angle: 7 < θ ≤ 20 degrees
Exposure Category: D
Panel Orientation: Portrait
North/South Support γ_E = 1.5
Roof Type : Hip h/B = ≥ 0.8

Roof Wind Zone	Ground Snow Load (psf)	Wind Speed (mph)												
		90	95	100	105	110	115	120	130	140	150	160	170	180
Zone 1	0	110	104	99	94	88	83	79	72	66	61	56	52	49
	10	107	104	99	94	88	83	79	72	66	61	56	52	49
	20	82	82	82	82	82	82	79	72	66	61	56	52	49
	30	82	82	82	82	82	82	79	72	66	61	56	52	49
	40	73	73	73	73	73	73	73	72	66	61	56	52	49
	50	66	66	66	66	66	66	66	66	66	61	56	52	49
	60	60	60	60	60	60	60	60	60	60	60	56	52	49
	70	56	56	56	56	56	56	56	56	56	56	56	52	49
	80	53	53	53	53	53	53	53	53	53	53	53	52	49
	90	50	50	50	50	50	50	50	50	50	50	50	50	49
Zone 2r	0	100	95	89	83	78	74	70	63	57	52	48	45	42
	10	100	95	89	83	78	74	70	63	57	52	48	45	42
	20	82	82	82	82	78	74	70	63	57	52	48	45	42
	30	82	82	82	82	78	74	70	63	57	52	48	45	42
	40	73	73	73	73	73	73	70	63	57	52	48	45	42
	50	66	66	66	66	66	66	66	63	57	52	48	45	42
	60	60	60	60	60	60	60	60	60	57	52	48	45	42
	70	56	56	56	56	56	56	56	56	56	52	48	45	42
	80	53	53	53	53	53	53	53	53	53	52	48	45	42
	90	50	50	50	50	50	50	50	50	50	50	48	45	42
Zones 2e & 3	0	97	90	84	79	74	70	66	60	54	50	46	42	40
	10	97	90	84	79	74	70	66	60	54	50	46	42	40
	20	82	82	82	79	74	70	66	60	54	50	46	42	40
	30	82	82	82	79	74	70	66	60	54	50	46	42	40
	40	73	73	73	73	73	70	66	60	54	50	46	42	40
	50	66	66	66	66	66	66	66	60	54	50	46	42	40
	60	60	60	60	60	60	60	60	60	54	50	46	42	40
	70	56	56	56	56	56	56	56	56	54	50	46	42	40
	80	53	53	53	53	53	53	53	53	53	50	46	42	40
	90	50	50	50	50	50	50	50	50	50	50	46	42	40

Notes:

1. Tables are based on critical rail span for load combinations as specified in chapter 2 of the ASCE 7-16 and allowable design loads per the 2015 Aluminum Design Manual.
2. Panels are assumed to be in portrait orientation with a maximum length of 67.5"

Max Rail Spans for SunModo SMR200 Rail System

Table 16a

Mean Roof Height: h ≤ 15 ft
Roof Angle: 7 < θ ≤ 20 degrees
Exposure Category: B
Panel Orientation: Portrait
North/South Support Y_E = 1
Roof Type : Hip h/B = ≤ 0.5

Roof Wind Zone	Ground Snow Load (psf)	Wind Speed (mph)												
		90	95	100	105	110	115	120	130	140	150	160	170	180
Zone 1	0	119	119	119	119	119	119	119	119	119	119	117	111	105
	10	107	107	107	107	107	107	107	107	106	105	103	101	99
	20	82	82	82	82	82	82	82	82	82	82	82	81	80
	30	82	82	82	82	82	82	82	82	82	82	82	81	80
	40	73	73	73	73	73	73	73	73	73	73	73	73	73
	50	66	66	66	66	66	66	66	66	66	66	66	66	66
	60	60	60	60	60	60	60	60	60	60	60	60	60	60
	70	56	56	56	56	56	56	56	56	56	56	56	56	56
	80	53	53	53	53	53	53	53	53	53	53	53	53	53
	90	50	50	50	50	50	50	50	50	50	50	50	50	50
Zone 2r	0	119	119	119	119	119	119	119	113	105	99	92	85	79
	10	107	107	107	107	107	107	107	107	105	99	92	85	79
	20	82	82	82	82	82	82	82	82	82	82	82	81	79
	30	82	82	82	82	82	82	82	82	82	82	82	81	79
	40	73	73	73	73	73	73	73	73	73	73	73	73	73
	50	66	66	66	66	66	66	66	66	66	66	66	66	66
	60	60	60	60	60	60	60	60	60	60	60	60	60	60
	70	56	56	56	56	56	56	56	56	56	56	56	56	56
	80	53	53	53	53	53	53	53	53	53	53	53	53	53
	90	50	50	50	50	50	50	50	50	50	50	50	50	50
Zones 2e & 3	0	119	119	119	119	119	119	119	119	119	111	105	100	94
	10	107	107	107	107	107	107	107	107	106	105	103	100	94
	20	82	82	82	82	82	82	82	82	82	82	82	81	80
	30	82	82	82	82	82	82	82	82	82	82	82	81	80
	40	73	73	73	73	73	73	73	73	73	73	73	73	73
	50	66	66	66	66	66	66	66	66	66	66	66	66	66
	60	60	60	60	60	60	60	60	60	60	60	60	60	60
	70	56	56	56	56	56	56	56	56	56	56	56	56	56
	80	53	53	53	53	53	53	53	53	53	53	53	53	53
	90	50	50	50	50	50	50	50	50	50	50	50	50	50

Notes:

1. Tables are based on critical rail span for load combinations as specified in chapter 2 of the ASCE 7-16 and allowable design loads per the 2015 Aluminum Design Manual.
2. Panels are assumed to be in portrait orientation with a maximum length of 67.5"

Max Rail Spans for SunModo SMR200 Rail System

Table 16b

Mean Roof Height: h ≤ 15 ft
Roof Angle: 7 < θ ≤ 20 degrees
Exposure Category: B
Panel Orientation: Portrait
North/South Support γ_E = 1.5
Roof Type : Hip h/B = ≤ 0.5

Roof Wind Zone	Ground Snow Load (psf)	Wind Speed (mph)												
		90	95	100	105	110	115	120	130	140	150	160	170	180
Zone 1	0	119	119	119	119	119	119	119	118	110	103	97	91	84
	10	107	107	107	107	107	107	107	107	106	103	97	91	84
	20	82	82	82	82	82	82	82	82	82	82	82	81	80
	30	82	82	82	82	82	82	82	82	82	82	82	81	80
	40	73	73	73	73	73	73	73	73	73	73	73	73	73
	50	66	66	66	66	66	66	66	66	66	66	66	66	66
	60	60	60	60	60	60	60	60	60	60	60	60	60	60
	70	56	56	56	56	56	56	56	56	56	56	56	56	56
	80	53	53	53	53	53	53	53	53	53	53	53	53	53
	90	50	50	50	50	50	50	50	50	50	50	50	50	50
Zone 2r	0	119	119	119	114	109	105	101	93	84	77	70	65	60
	10	107	107	107	107	107	105	101	93	84	77	70	65	60
	20	82	82	82	82	82	82	82	82	82	77	70	65	60
	30	82	82	82	82	82	82	82	82	82	77	70	65	60
	40	73	73	73	73	73	73	73	73	73	73	70	65	60
	50	66	66	66	66	66	66	66	66	66	66	66	65	60
	60	60	60	60	60	60	60	60	60	60	60	60	60	60
	70	56	56	56	56	56	56	56	56	56	56	56	56	56
	80	53	53	53	53	53	53	53	53	53	53	53	53	53
	90	50	50	50	50	50	50	50	50	50	50	50	50	50
Zones 2e & 3	0	119	119	119	119	119	118	114	106	99	92	84	78	72
	10	107	107	107	107	107	107	107	106	99	92	84	78	72
	20	82	82	82	82	82	82	82	82	82	82	82	78	72
	30	82	82	82	82	82	82	82	82	82	82	82	78	72
	40	73	73	73	73	73	73	73	73	73	73	73	73	72
	50	66	66	66	66	66	66	66	66	66	66	66	66	66
	60	60	60	60	60	60	60	60	60	60	60	60	60	60
	70	56	56	56	56	56	56	56	56	56	56	56	56	56
	80	53	53	53	53	53	53	53	53	53	53	53	53	53
	90	50	50	50	50	50	50	50	50	50	50	50	50	50

Notes:

1. Tables are based on critical rail span for load combinations as specified in chapter 2 of the ASCE 7-16 and allowable design loads per the 2015 Aluminum Design Manual.
2. Panels are assumed to be in portrait orientation with a maximum length of 67.5"

Max Rail Spans for SunModo SMR200 Rail System

Table 17a

Mean Roof Height: h ≤ 15 ft
Roof Angle: 7 < θ ≤ 20 degrees
Exposure Category: C
Panel Orientation: Portrait
North/South Support Y_E = 1
Roof Type : Hip h/B = ≤ 0.5

Roof Wind Zone	Ground Snow Load (psf)	Wind Speed (mph)												
		90	95	100	105	110	115	120	130	140	150	160	170	180
Zone 1	0	119	119	119	119	119	119	119	118	110	103	98	91	84
	10	107	107	107	107	107	106	105	103	101	99	97	91	84
	20	82	82	82	82	82	82	82	82	81	79	78	76	75
	30	82	82	82	82	82	82	82	82	81	79	78	76	75
	40	73	73	73	73	73	73	73	73	73	72	71	70	69
	50	66	66	66	66	66	66	66	66	66	66	66	65	64
	60	60	60	60	60	60	60	60	60	60	60	60	60	60
	70	56	56	56	56	56	56	56	56	56	56	56	56	56
	80	53	53	53	53	53	53	53	53	53	53	53	53	53
	90	50	50	50	50	50	50	50	50	50	50	50	50	50
Zone 2r	0	119	119	119	114	109	105	101	93	84	77	71	65	61
	10	107	107	107	107	107	105	101	93	84	77	71	65	61
	20	82	82	82	82	82	82	82	82	81	77	71	65	61
	30	82	82	82	82	82	82	82	82	81	77	71	65	61
	40	73	73	73	73	73	73	73	73	73	72	71	65	61
	50	66	66	66	66	66	66	66	66	66	66	66	65	61
	60	60	60	60	60	60	60	60	60	60	60	60	60	60
	70	56	56	56	56	56	56	56	56	56	56	56	56	56
	80	53	53	53	53	53	53	53	53	53	53	53	53	53
	90	50	50	50	50	50	50	50	50	50	50	50	50	50
Zones 2e & 3	0	119	119	119	119	119	119	114	106	99	92	85	78	72
	10	107	107	107	107	107	106	105	103	99	92	85	78	72
	20	82	82	82	82	82	82	82	82	81	79	78	76	72
	30	82	82	82	82	82	82	82	82	81	79	78	76	72
	40	73	73	73	73	73	73	73	73	73	72	71	70	69
	50	66	66	66	66	66	66	66	66	66	66	66	65	64
	60	60	60	60	60	60	60	60	60	60	60	60	60	60
	70	56	56	56	56	56	56	56	56	56	56	56	56	56
	80	53	53	53	53	53	53	53	53	53	53	53	53	53
	90	50	50	50	50	50	50	50	50	50	50	50	50	50

Notes:

1. Tables are based on critical rail span for load combinations as specified in chapter 2 of the ASCE 7-16 and allowable design loads per the 2015 Aluminum Design Manual.
2. Panels are assumed to be in portrait orientation with a maximum length of 67.5"

Max Rail Spans for SunModo SMR200 Rail System

Table 17b

Mean Roof Height: h ≤ 15 ft
Roof Angle: 7 < θ ≤ 20 degrees
Exposure Category: C
Panel Orientation: Portrait
North/South Support γ_E = 1.5
Roof Type : Hip h/B = ≤ 0.5

Roof Wind Zone	Ground Snow Load (psf)	Wind Speed (mph)												
		90	95	100	105	110	115	120	130	140	150	160	170	180
Zone 1	0	119	119	119	119	114	109	105	98	90	82	76	71	66
	10	107	107	107	107	107	106	105	98	90	82	76	71	66
	20	82	82	82	82	82	82	82	82	81	79	76	71	66
	30	82	82	82	82	82	82	82	82	81	79	76	71	66
	40	73	73	73	73	73	73	73	73	73	72	71	70	66
	50	66	66	66	66	66	66	66	66	66	66	66	65	64
	60	60	60	60	60	60	60	60	60	60	60	60	60	60
	70	56	56	56	56	56	56	56	56	56	56	56	56	56
	80	53	53	53	53	53	53	53	53	53	53	53	53	53
	90	50	50	50	50	50	50	50	50	50	50	50	50	50
Zone 2r	0	109	104	99	95	89	84	79	71	65	59	54	50	47
	10	107	104	99	95	89	84	79	71	65	59	54	50	47
	20	82	82	82	82	82	82	79	71	65	59	54	50	47
	30	82	82	82	82	82	82	79	71	65	59	54	50	47
	40	73	73	73	73	73	73	73	71	65	59	54	50	47
	50	66	66	66	66	66	66	66	66	65	59	54	50	47
	60	60	60	60	60	60	60	60	60	60	59	54	50	47
	70	56	56	56	56	56	56	56	56	56	56	54	50	47
	80	53	53	53	53	53	53	53	53	53	53	53	50	47
	90	50	50	50	50	50	50	50	50	50	50	50	50	47
Zones 2e & 3	0	119	117	112	107	103	99	95	85	77	71	65	60	56
	10	107	107	107	107	103	99	95	85	77	71	65	60	56
	20	82	82	82	82	82	82	82	82	77	71	65	60	56
	30	82	82	82	82	82	82	82	82	77	71	65	60	56
	40	73	73	73	73	73	73	73	73	73	71	65	60	56
	50	66	66	66	66	66	66	66	66	66	66	65	60	56
	60	60	60	60	60	60	60	60	60	60	60	60	60	56
	70	56	56	56	56	56	56	56	56	56	56	56	56	56
	80	53	53	53	53	53	53	53	53	53	53	53	53	53
	90	50	50	50	50	50	50	50	50	50	50	50	50	50

Notes:

1. Tables are based on critical rail span for load combinations as specified in chapter 2 of the ASCE 7-16 and allowable design loads per the 2015 Aluminum Design Manual.
2. Panels are assumed to be in portrait orientation with a maximum length of 67.5"

Max Rail Spans for SunModo SMR200 Rail System

Table 18a

Mean Roof Height: h ≤ 15 ft
Roof Angle: 7 < θ ≤ 20 degrees
Exposure Category: D
Panel Orientation: Portrait
North/South Support Y_E = 1
Roof Type : Hip h/B = ≤ 0.5

Roof Wind Zone	Ground Snow Load (psf)	Wind Speed (mph)												
		90	95	100	105	110	115	120	130	140	150	160	170	180
Zone 1	0	119	119	119	119	119	119	116	108	101	95	87	80	75
	10	107	107	107	106	105	104	103	100	98	95	87	80	75
	20	82	82	82	82	82	82	82	80	79	77	75	74	72
	30	82	82	82	82	82	82	82	80	79	77	75	74	72
	40	73	73	73	73	73	73	73	73	72	71	69	68	67
	50	66	66	66	66	66	66	66	66	66	66	64	63	62
	60	60	60	60	60	60	60	60	60	60	60	60	60	59
	70	56	56	56	56	56	56	56	56	56	56	56	56	56
	80	53	53	53	53	53	53	53	53	53	53	53	53	53
	90	50	50	50	50	50	50	50	50	50	50	50	50	50
Zone 2r	0	119	115	109	104	100	96	91	82	74	68	62	58	54
	10	107	107	107	104	100	96	91	82	74	68	62	58	54
	20	82	82	82	82	82	82	82	80	74	68	62	58	54
	30	82	82	82	82	82	82	82	80	74	68	62	58	54
	40	73	73	73	73	73	73	73	73	72	68	62	58	54
	50	66	66	66	66	66	66	66	66	66	66	62	58	54
	60	60	60	60	60	60	60	60	60	60	60	60	58	54
	70	56	56	56	56	56	56	56	56	56	56	56	56	54
	80	53	53	53	53	53	53	53	53	53	53	53	53	53
	90	50	50	50	50	50	50	50	50	50	50	50	50	50
Zones 2e & 3	0	119	119	119	118	113	108	104	97	89	81	75	69	64
	10	107	107	107	106	105	104	103	97	89	81	75	69	64
	20	82	82	82	82	82	82	82	80	79	77	75	69	64
	30	82	82	82	82	82	82	82	80	79	77	75	69	64
	40	73	73	73	73	73	73	73	73	72	71	69	68	64
	50	66	66	66	66	66	66	66	66	66	66	64	63	62
	60	60	60	60	60	60	60	60	60	60	60	60	60	59
	70	56	56	56	56	56	56	56	56	56	56	56	56	56
	80	53	53	53	53	53	53	53	53	53	53	53	53	53
	90	50	50	50	50	50	50	50	50	50	50	50	50	50

Notes:

1. Tables are based on critical rail span for load combinations as specified in chapter 2 of the ASCE 7-16 and allowable design loads per the 2015 Aluminum Design Manual.
2. Panels are assumed to be in portrait orientation with a maximum length of 67.5"

Max Rail Spans for SunModo SMR200 Rail System

Table 18b

Mean Roof Height: h ≤ 15 ft
Roof Angle: 7 < θ ≤ 20 degrees
Exposure Category: D
Panel Orientation: Portrait
North/South Support γ_E = 1.5
Roof Type : Hip h/B = ≤ 0.5

Roof Wind Zone	Ground Snow Load (psf)	Wind Speed (mph)												
		90	95	100	105	110	115	120	130	140	150	160	170	180
Zone 1	0	119	119	114	109	104	100	97	87	80	73	68	63	59
	10	107	107	107	106	104	100	97	87	80	73	68	63	59
	20	82	82	82	82	82	82	82	80	79	73	68	63	59
	30	82	82	82	82	82	82	82	80	79	73	68	63	59
	40	73	73	73	73	73	73	73	73	72	71	68	63	59
	50	66	66	66	66	66	66	66	66	66	66	64	63	59
	60	60	60	60	60	60	60	60	60	60	60	60	60	59
	70	56	56	56	56	56	56	56	56	56	56	56	56	56
	80	53	53	53	53	53	53	53	53	53	53	53	53	53
	90	50	50	50	50	50	50	50	50	50	50	50	50	50
Zone 2r	0	100	95	89	83	78	74	70	63	57	52	48	45	42
	10	100	95	89	83	78	74	70	63	57	52	48	45	42
	20	82	82	82	82	78	74	70	63	57	52	48	45	42
	30	82	82	82	82	78	74	70	63	57	52	48	45	42
	40	73	73	73	73	73	73	70	63	57	52	48	45	42
	50	66	66	66	66	66	66	66	63	57	52	48	45	42
	60	60	60	60	60	60	60	60	60	57	52	48	45	42
	70	56	56	56	56	56	56	56	56	56	52	48	45	42
	80	53	53	53	53	53	53	53	53	53	52	48	45	42
	90	50	50	50	50	50	50	50	50	50	50	48	45	42
Zones 2e & 3	0	113	107	102	98	94	88	83	75	68	62	57	53	50
	10	107	107	102	98	94	88	83	75	68	62	57	53	50
	20	82	82	82	82	82	82	82	75	68	62	57	53	50
	30	82	82	82	82	82	82	82	75	68	62	57	53	50
	40	73	73	73	73	73	73	73	73	68	62	57	53	50
	50	66	66	66	66	66	66	66	66	66	62	57	53	50
	60	60	60	60	60	60	60	60	60	60	60	57	53	50
	70	56	56	56	56	56	56	56	56	56	56	56	53	50
	80	53	53	53	53	53	53	53	53	53	53	53	53	50
	90	50	50	50	50	50	50	50	50	50	50	50	50	50

Notes:

1. Tables are based on critical rail span for load combinations as specified in chapter 2 of the ASCE 7-16 and allowable design loads per the 2015 Aluminum Design Manual.
2. Panels are assumed to be in portrait orientation with a maximum length of 67.5"

Max Rail Spans for SunModo SMR200 Rail System

Table 19a

Mean Roof Height: h ≤ 15 ft
Roof Angle: 20 < θ ≤ 27 degrees
Exposure Category: B
Panel Orientation: Portrait
North/South Support Y_E = 1
Roof Type : Hip

Roof Wind Zone	Ground Snow Load (psf)	Wind Speed (mph)												
		90	95	100	105	110	115	120	130	140	150	160	170	180
Zone 1	0	119	119	119	119	119	119	119	119	119	119	119	115	109
	10	116	116	116	116	116	116	116	116	116	115	113	111	109
	20	97	97	97	97	97	97	97	97	97	96	95	94	92
	30	83	83	83	83	83	83	83	83	83	83	83	83	82
	40	73	73	73	73	73	73	73	73	73	73	73	73	73
	50	66	66	66	66	66	66	66	66	66	66	66	66	66
	60	61	61	61	61	61	61	61	61	61	61	61	61	61
	70	57	57	57	57	57	57	57	57	57	57	57	57	57
	80	53	53	53	53	53	53	53	53	53	53	53	53	53
	90	51	51	51	51	51	51	51	51	51	51	51	51	51
Zones 2e, 2r, & 3	0	119	119	119	119	119	119	119	119	115	108	102	96	89
	10	116	116	116	116	116	116	116	116	115	108	102	96	89
	20	97	97	97	97	97	97	97	97	97	96	95	94	89
	30	83	83	83	83	83	83	83	83	83	83	83	83	82
	40	73	73	73	73	73	73	73	73	73	73	73	73	73
	50	66	66	66	66	66	66	66	66	66	66	66	66	66
	60	61	61	61	61	61	61	61	61	61	61	61	61	61
	70	57	57	57	57	57	57	57	57	57	57	57	57	57
	80	53	53	53	53	53	53	53	53	53	53	53	53	53
	90	51	51	51	51	51	51	51	51	51	51	51	51	51

Notes:

1. Tables are based on critical rail span for load combinations as specified in chapter 2 of the ASCE 7-16 and allowable design loads per the 2015 Aluminum Design Manual.
2. Panels are assumed to be in portrait orientation with a maximum length of 67.5"

Max Rail Spans for SunModo SMR200 Rail System

Table 19b

Mean Roof Height: h ≤ 15 ft
Roof Angle: 20 < θ ≤ 27 degrees
Exposure Category: B
Panel Orientation: Portrait
North/South Support γ_E = 1.5
Roof Type : Hip

Roof Wind Zone	Ground Snow Load (psf)	Wind Speed (mph)												
		90	95	100	105	110	115	120	130	140	150	160	170	180
Zone 1	0	119	119	119	119	119	119	119	119	114	107	100	94	87
	10	116	116	116	116	116	116	116	116	114	107	100	94	87
	20	97	97	97	97	97	97	97	97	97	96	95	94	87
	30	83	83	83	83	83	83	83	83	83	83	83	83	82
	40	73	73	73	73	73	73	73	73	73	73	73	73	73
	50	66	66	66	66	66	66	66	66	66	66	66	66	66
	60	61	61	61	61	61	61	61	61	61	61	61	61	61
	70	57	57	57	57	57	57	57	57	57	57	57	57	57
	80	53	53	53	53	53	53	53	53	53	53	53	53	53
	90	51	51	51	51	51	51	51	51	51	51	51	51	51
Zones 2e, 2r, & 3	0	119	119	119	119	119	114	110	102	95	86	79	73	68
	10	116	116	116	116	116	114	110	102	95	86	79	73	68
	20	97	97	97	97	97	97	97	97	95	86	79	73	68
	30	83	83	83	83	83	83	83	83	83	83	79	73	68
	40	73	73	73	73	73	73	73	73	73	73	73	73	68
	50	66	66	66	66	66	66	66	66	66	66	66	66	66
	60	61	61	61	61	61	61	61	61	61	61	61	61	61
	70	57	57	57	57	57	57	57	57	57	57	57	57	57
	80	53	53	53	53	53	53	53	53	53	53	53	53	53
	90	51	51	51	51	51	51	51	51	51	51	51	51	51

Notes:

1. Tables are based on critical rail span for load combinations as specified in chapter 2 of the ASCE 7-16 and allowable design loads per the 2015 Aluminum Design Manual.
2. Panels are assumed to be in portrait orientation with a maximum length of 67.5"

Max Rail Spans for SunModo SMR200 Rail System

Table 20a

Mean Roof Height: h ≤ 15 ft
Roof Angle: 20 < θ ≤ 27 degrees
Exposure Category: C
Panel Orientation: Portrait
North/South Support Y_E = 1
Roof Type : Hip

Roof Wind Zone	Ground Snow Load (psf)	Wind Speed (mph)												
		90	95	100	105	110	115	120	130	140	150	160	170	180
Zone 1	0	119	119	119	119	119	119	119	119	114	107	101	94	87
	10	116	116	116	116	116	116	116	113	111	107	101	94	87
	20	97	97	97	97	97	97	97	95	94	92	90	88	86
	30	83	83	83	83	83	83	83	83	83	81	80	79	77
	40	73	73	73	73	73	73	73	73	73	73	73	72	71
	50	66	66	66	66	66	66	66	66	66	66	66	66	65
	60	61	61	61	61	61	61	61	61	61	61	61	61	61
	70	57	57	57	57	57	57	57	57	57	57	57	57	57
	80	53	53	53	53	53	53	53	53	53	53	53	53	53
	90	51	51	51	51	51	51	51	51	51	51	51	51	51
Zones 2e, 2r, & 3	0	119	119	119	119	119	115	110	102	95	87	80	73	68
	10	116	116	116	116	116	115	110	102	95	87	80	73	68
	20	97	97	97	97	97	97	97	95	94	87	80	73	68
	30	83	83	83	83	83	83	83	83	83	81	80	73	68
	40	73	73	73	73	73	73	73	73	73	73	73	72	68
	50	66	66	66	66	66	66	66	66	66	66	66	66	65
	60	61	61	61	61	61	61	61	61	61	61	61	61	61
	70	57	57	57	57	57	57	57	57	57	57	57	57	57
	80	53	53	53	53	53	53	53	53	53	53	53	53	53
	90	51	51	51	51	51	51	51	51	51	51	51	51	51

Notes:

1. Tables are based on critical rail span for load combinations as specified in chapter 2 of the ASCE 7-16 and allowable design loads per the 2015 Aluminum Design Manual.
2. Panels are assumed to be in portrait orientation with a maximum length of 67.5"

Max Rail Spans for SunModo SMR200 Rail System

Table 20b

Mean Roof Height: h ≤ 15 ft
Roof Angle: 20 < θ ≤ 27 degrees
Exposure Category: C
Panel Orientation: Portrait
North/South Support γ_E = 1.5
Roof Type : Hip

Roof Wind Zone	Ground Snow Load (psf)	Wind Speed (mph)												
		90	95	100	105	110	115	120	130	140	150	160	170	180
Zone 1	0	119	119	119	119	118	113	109	101	93	85	78	72	66
	10	116	116	116	116	116	113	109	101	93	85	78	72	66
	20	97	97	97	97	97	97	97	95	93	85	78	72	66
	30	83	83	83	83	83	83	83	83	83	81	78	72	66
	40	73	73	73	73	73	73	73	73	73	73	73	72	66
	50	66	66	66	66	66	66	66	66	66	66	66	66	65
	60	61	61	61	61	61	61	61	61	61	61	61	61	61
	70	57	57	57	57	57	57	57	57	57	57	57	57	57
	80	53	53	53	53	53	53	53	53	53	53	53	53	53
	90	51	51	51	51	51	51	51	51	51	51	51	51	51
Zones 2e, 2r, & 3	0	119	113	108	103	99	94	89	80	73	66	61	56	52
	10	116	113	108	103	99	94	89	80	73	66	61	56	52
	20	97	97	97	97	97	94	89	80	73	66	61	56	52
	30	83	83	83	83	83	83	83	80	73	66	61	56	52
	40	73	73	73	73	73	73	73	73	73	66	61	56	52
	50	66	66	66	66	66	66	66	66	66	66	61	56	52
	60	61	61	61	61	61	61	61	61	61	61	61	56	52
	70	57	57	57	57	57	57	57	57	57	57	57	56	52
	80	53	53	53	53	53	53	53	53	53	53	53	53	52
	90	51	51	51	51	51	51	51	51	51	51	51	51	51

Notes:

1. Tables are based on critical rail span for load combinations as specified in chapter 2 of the ASCE 7-16 and allowable design loads per the 2015 Aluminum Design Manual.
2. Panels are assumed to be in portrait orientation with a maximum length of 67.5"

Max Rail Spans for SunModo SMR200 Rail System

Table 21a

Mean Roof Height: h ≤ 15 ft
Roof Angle: 20 < θ ≤ 27 degrees
Exposure Category: D
Panel Orientation: Portrait
North/South Support Y_E = 1
Roof Type : Hip

Roof Wind Zone	Ground Snow Load (psf)	Wind Speed (mph)												
		90	95	100	105	110	115	120	130	140	150	160	170	180
Zone 1	0	119	119	119	119	119	119	119	112	104	98	90	83	77
	10	116	116	116	116	116	114	113	110	104	98	90	83	77
	20	97	97	97	97	97	96	95	93	91	89	87	83	77
	30	83	83	83	83	83	83	83	82	81	79	78	76	74
	40	73	73	73	73	73	73	73	73	73	72	71	70	68
	50	66	66	66	66	66	66	66	66	66	66	66	65	64
	60	61	61	61	61	61	61	61	61	61	61	61	61	60
	70	57	57	57	57	57	57	57	57	57	57	57	57	57
	80	53	53	53	53	53	53	53	53	53	53	53	53	53
	90	51	51	51	51	51	51	51	51	51	51	51	51	51
Zones 2e, 2r, & 3	0	119	119	119	114	109	105	101	92	84	76	70	65	60
	10	116	116	116	114	109	105	101	92	84	76	70	65	60
	20	97	97	97	97	97	96	95	92	84	76	70	65	60
	30	83	83	83	83	83	83	83	82	81	76	70	65	60
	40	73	73	73	73	73	73	73	73	73	72	70	65	60
	50	66	66	66	66	66	66	66	66	66	66	66	65	60
	60	61	61	61	61	61	61	61	61	61	61	61	61	60
	70	57	57	57	57	57	57	57	57	57	57	57	57	57
	80	53	53	53	53	53	53	53	53	53	53	53	53	53
	90	51	51	51	51	51	51	51	51	51	51	51	51	51

Notes:

1. Tables are based on critical rail span for load combinations as specified in chapter 2 of the ASCE 7-16 and allowable design loads per the 2015 Aluminum Design Manual.
2. Panels are assumed to be in portrait orientation with a maximum length of 67.5"

Structural ENGINUITY INC
Ingenuity in Engineering

SUNMODO®

Max Rail Spans for SunModo SMR200 Rail System

Table 21b

Mean Roof Height: h ≤ 15 ft
Roof Angle: 20 < θ ≤ 27 degrees
Exposure Category: D
Panel Orientation: Portrait
North/South Support γ_E = 1.5
Roof Type : Hip

Roof Wind Zone	Ground Snow Load (psf)	Wind Speed (mph)												
		90	95	100	105	110	115	120	130	140	150	160	170	180
Zone 1	0	119	119	118	113	108	104	100	90	82	74	68	63	59
	10	116	116	116	113	108	104	100	90	82	74	68	63	59
	20	97	97	97	97	97	96	95	90	82	74	68	63	59
	30	83	83	83	83	83	83	83	82	81	74	68	63	59
	40	73	73	73	73	73	73	73	73	73	72	68	63	59
	50	66	66	66	66	66	66	66	66	66	66	66	63	59
	60	61	61	61	61	61	61	61	61	61	61	61	61	59
	70	57	57	57	57	57	57	57	57	57	57	57	57	57
	80	53	53	53	53	53	53	53	53	53	53	53	53	53
	90	51	51	51	51	51	51	51	51	51	51	51	51	51
Zones 2e, 2r, & 3	0	109	104	99	94	88	83	78	71	64	59	54	50	46
	10	109	104	99	94	88	83	78	71	64	59	54	50	46
	20	97	97	97	94	88	83	78	71	64	59	54	50	46
	30	83	83	83	83	83	83	78	71	64	59	54	50	46
	40	73	73	73	73	73	73	73	71	64	59	54	50	46
	50	66	66	66	66	66	66	66	66	64	59	54	50	46
	60	61	61	61	61	61	61	61	61	61	59	54	50	46
	70	57	57	57	57	57	57	57	57	57	57	54	50	46
	80	53	53	53	53	53	53	53	53	53	53	53	50	46
	90	51	51	51	51	51	51	51	51	51	51	51	50	46

Notes:

1. Tables are based on critical rail span for load combinations as specified in chapter 2 of the ASCE 7-16 and allowable design loads per the 2015 Aluminum Design Manual.
2. Panels are assumed to be in portrait orientation with a maximum length of 67.5"

Max Rail Spans for SunModo SMR200 Rail System

Table 22a

Mean Roof Height: h ≤ 15 ft
Roof Angle: 27 < θ ≤ 45 degrees
Exposure Category: B
Panel Orientation: Portrait
North/South Support Y_E = 1
Roof Type : Hip

Roof Wind Zone	Ground Snow Load (psf)	Wind Speed (mph)												
		90	95	100	105	110	115	120	130	140	150	160	170	180
Zone 1	0	119	119	119	119	119	119	119	119	119	119	115	109	103
	10	117	117	117	117	117	117	117	117	117	117	115	109	103
	20	101	101	101	101	101	101	101	101	101	100	98	97	95
	30	87	87	87	87	87	87	87	87	87	87	87	86	85
	40	77	77	77	77	77	77	77	77	77	77	77	77	77
	50	70	70	70	70	70	70	70	70	70	70	70	70	70
	60	65	65	65	65	65	65	65	65	65	65	65	65	65
	70	60	60	60	60	60	60	60	60	60	60	60	60	60
	80	57	57	57	57	57	57	57	57	57	57	57	57	57
	90	54	54	54	54	54	54	54	54	54	54	54	54	54
Zone 2e	0	119	119	119	119	119	119	119	119	119	119	116	108	102
	10	117	117	117	117	117	117	117	117	117	117	115	108	102
	20	101	101	101	101	101	101	101	101	101	100	98	97	95
	30	87	87	87	87	87	87	87	87	87	87	87	86	85
	40	77	77	77	77	77	77	77	77	77	77	77	77	77
	50	70	70	70	70	70	70	70	70	70	70	70	70	70
	60	65	65	65	65	65	65	65	65	65	65	65	65	65
	70	60	60	60	60	60	60	60	60	60	60	60	60	60
	80	57	57	57	57	57	57	57	57	57	57	57	57	57
	90	54	54	54	54	54	54	54	54	54	54	54	54	54
Zone 2r	0	119	119	119	119	119	119	119	119	111	104	97	89	82
	10	117	117	117	117	117	117	117	117	111	104	97	89	82
	20	101	101	101	101	101	101	101	101	101	100	97	89	82
	30	87	87	87	87	87	87	87	87	87	87	87	86	82
	40	77	77	77	77	77	77	77	77	77	77	77	77	77
	50	70	70	70	70	70	70	70	70	70	70	70	70	70
	60	65	65	65	65	65	65	65	65	65	65	65	65	65
	70	60	60	60	60	60	60	60	60	60	60	60	60	60
	80	57	57	57	57	57	57	57	57	57	57	57	57	57
	90	54	54	54	54	54	54	54	54	54	54	54	54	54
Zone 3	0	119	119	119	119	119	119	119	119	117	109	102	92	84
	10	117	117	117	117	117	117	117	117	117	109	102	92	84
	20	101	101	101	101	101	101	101	101	101	100	98	92	84
	30	87	87	87	87	87	87	87	87	87	87	87	86	84
	40	77	77	77	77	77	77	77	77	77	77	77	77	77
	50	70	70	70	70	70	70	70	70	70	70	70	70	70
	60	65	65	65	65	65	65	65	65	65	65	65	65	65
	70	60	60	60	60	60	60	60	60	60	60	60	60	60
	80	57	57	57	57	57	57	57	57	57	57	57	57	57
	90	54	54	54	54	54	54	54	54	54	54	54	54	54

Notes:

1. Tables are based on critical rail span for load combinations as specified in chapter 2 of the ASCE 7-16 and allowable design loads per the 2015 Aluminum Design Manual.
2. Panels are assumed to be in portrait orientation with a maximum length of 67.5"

Structural ENGINUITY INC
Ingenuity in Engineering

SUNMODO®

Max Rail Spans for SunModo SMR200 Rail System

Table 22b

Mean Roof Height: h ≤ 15 ft
Roof Angle: 27 < θ ≤ 45 degrees
Exposure Category: B
Panel Orientation: Portrait
North/South Support γ_E = 1.5
Roof Type : Hip

Roof Wind Zone	Ground Snow Load (psf)	Wind Speed (mph)												
		90	95	100	105	110	115	120	130	140	150	160	170	180
Zone 1	0	119	119	119	119	119	119	119	115	108	101	93	86	80
	10	117	117	117	117	117	117	117	115	108	101	93	86	80
	20	101	101	101	101	101	101	101	101	101	100	93	86	80
	30	87	87	87	87	87	87	87	87	87	87	87	86	80
	40	77	77	77	77	77	77	77	77	77	77	77	77	77
	50	70	70	70	70	70	70	70	70	70	70	70	70	70
	60	65	65	65	65	65	65	65	65	65	65	65	65	65
	70	60	60	60	60	60	60	60	60	60	60	60	60	60
	80	57	57	57	57	57	57	57	57	57	57	57	57	57
	90	54	54	54	54	54	54	54	54	54	54	54	54	54
Zone 2e	0	119	119	119	119	119	119	119	116	107	100	90	82	76
	10	117	117	117	117	117	117	117	116	107	100	90	82	76
	20	101	101	101	101	101	101	101	101	101	100	90	82	76
	30	87	87	87	87	87	87	87	87	87	87	87	82	76
	40	77	77	77	77	77	77	77	77	77	77	77	77	76
	50	70	70	70	70	70	70	70	70	70	70	70	70	70
	60	65	65	65	65	65	65	65	65	65	65	65	65	65
	70	60	60	60	60	60	60	60	60	60	60	60	60	60
	80	57	57	57	57	57	57	57	57	57	57	57	57	57
	90	54	54	54	54	54	54	54	54	54	54	54	54	54
Zone 2r	0	119	119	119	119	115	110	106	97	88	80	73	67	62
	10	117	117	117	117	115	110	106	97	88	80	73	67	62
	20	101	101	101	101	101	101	101	97	88	80	73	67	62
	30	87	87	87	87	87	87	87	87	87	80	73	67	62
	40	77	77	77	77	77	77	77	77	77	77	73	67	62
	50	70	70	70	70	70	70	70	70	70	70	70	67	62
	60	65	65	65	65	65	65	65	65	65	65	65	65	62
	70	60	60	60	60	60	60	60	60	60	60	60	60	60
	80	57	57	57	57	57	57	57	57	57	57	57	57	57
	90	54	54	54	54	54	54	54	54	54	54	54	54	54
Zone 3	0	119	119	119	119	119	117	111	102	91	81	74	67	62
	10	117	117	117	117	117	117	111	102	91	81	74	67	62
	20	101	101	101	101	101	101	101	101	91	81	74	67	62
	30	87	87	87	87	87	87	87	87	87	81	74	67	62
	40	77	77	77	77	77	77	77	77	77	77	74	67	62
	50	70	70	70	70	70	70	70	70	70	70	70	67	62
	60	65	65	65	65	65	65	65	65	65	65	65	65	62
	70	60	60	60	60	60	60	60	60	60	60	60	60	60
	80	57	57	57	57	57	57	57	57	57	57	57	57	57
	90	54	54	54	54	54	54	54	54	54	54	54	54	54

Notes:

1. Tables are based on critical rail span for load combinations as specified in chapter 2 of the ASCE 7-16 and allowable design loads per the 2015 Aluminum Design Manual.
2. Panels are assumed to be in portrait orientation with a maximum length of 67.5"

Max Rail Spans for SunModo SMR200 Rail System

Table 23a

Mean Roof Height: h ≤ 15 ft
Roof Angle: 27 < θ ≤ 45 degrees
Exposure Category: C
Panel Orientation: Portrait
North/South Support Y_E = 1
Roof Type : Hip

Roof Wind Zone	Ground Snow Load (psf)	Wind Speed (mph)												
		90	95	100	105	110	115	120	130	140	150	160	170	180
Zone 1	0	119	119	119	119	119	119	119	116	108	102	94	87	80
	10	117	117	117	117	117	117	117	116	108	102	94	87	80
	20	101	101	101	101	101	101	100	99	97	95	93	87	80
	30	87	87	87	87	87	87	87	87	86	85	83	82	80
	40	77	77	77	77	77	77	77	77	77	77	76	75	74
	50	70	70	70	70	70	70	70	70	70	70	70	70	69
	60	65	65	65	65	65	65	65	65	65	65	65	65	65
	70	60	60	60	60	60	60	60	60	60	60	60	60	60
	80	57	57	57	57	57	57	57	57	57	57	57	57	57
	90	54	54	54	54	54	54	54	54	54	54	54	54	54
Zone 2e	0	119	119	119	119	119	119	119	117	108	100	91	83	76
	10	117	117	117	117	117	117	117	116	108	100	91	83	76
	20	101	101	101	101	101	101	100	99	97	95	91	83	76
	30	87	87	87	87	87	87	87	87	86	85	83	82	76
	40	77	77	77	77	77	77	77	77	77	77	76	75	74
	50	70	70	70	70	70	70	70	70	70	70	70	70	69
	60	65	65	65	65	65	65	65	65	65	65	65	65	65
	70	60	60	60	60	60	60	60	60	60	60	60	60	60
	80	57	57	57	57	57	57	57	57	57	57	57	57	57
	90	54	54	54	54	54	54	54	54	54	54	54	54	54
Zone 2r	0	119	119	119	119	116	111	106	98	88	80	73	68	63
	10	117	117	117	117	116	111	106	98	88	80	73	68	63
	20	101	101	101	101	101	101	100	98	88	80	73	68	63
	30	87	87	87	87	87	87	87	87	86	80	73	68	63
	40	77	77	77	77	77	77	77	77	77	77	73	68	63
	50	70	70	70	70	70	70	70	70	70	70	70	68	63
	60	65	65	65	65	65	65	65	65	65	65	65	65	63
	70	60	60	60	60	60	60	60	60	60	60	60	60	60
	80	57	57	57	57	57	57	57	57	57	57	57	57	57
	90	54	54	54	54	54	54	54	54	54	54	54	54	54
Zone 3	0	119	119	119	119	119	117	112	102	91	82	74	67	62
	10	117	117	117	117	117	117	112	102	91	82	74	67	62
	20	101	101	101	101	101	101	100	99	91	82	74	67	62
	30	87	87	87	87	87	87	87	87	86	82	74	67	62
	40	77	77	77	77	77	77	77	77	77	77	74	67	62
	50	70	70	70	70	70	70	70	70	70	70	70	67	62
	60	65	65	65	65	65	65	65	65	65	65	65	65	62
	70	60	60	60	60	60	60	60	60	60	60	60	60	60
	80	57	57	57	57	57	57	57	57	57	57	57	57	57
	90	54	54	54	54	54	54	54	54	54	54	54	54	54

Notes:

1. Tables are based on critical rail span for load combinations as specified in chapter 2 of the ASCE 7-16 and allowable design loads per the 2015 Aluminum Design Manual.
2. Panels are assumed to be in portrait orientation with a maximum length of 67.5"

Max Rail Spans for SunModo SMR200 Rail System

Table 23b

Mean Roof Height: h ≤ 15 ft
Roof Angle: 27 < θ ≤ 45 degrees
Exposure Category: C
Panel Orientation: Portrait
North/South Support γ_E = 1.5
Roof Type : Hip

Roof Wind Zone	Ground Snow Load (psf)	Wind Speed (mph)												
		90	95	100	105	110	115	120	130	140	150	160	170	180
Zone 1	0	119	119	119	117	112	107	103	94	86	78	72	67	62
	10	117	117	117	117	112	107	103	94	86	78	72	67	62
	20	101	101	101	101	101	101	100	94	86	78	72	67	62
	30	87	87	87	87	87	87	87	87	86	78	72	67	62
	40	77	77	77	77	77	77	77	77	77	77	72	67	62
	50	70	70	70	70	70	70	70	70	70	70	70	67	62
	60	65	65	65	65	65	65	65	65	65	65	65	65	62
	70	60	60	60	60	60	60	60	60	60	60	60	60	60
	80	57	57	57	57	57	57	57	57	57	57	57	57	57
	90	54	54	54	54	54	54	54	54	54	54	54	54	54
Zone 2e	0	119	119	119	118	112	107	103	91	82	74	67	61	57
	10	117	117	117	117	112	107	103	91	82	74	67	61	57
	20	101	101	101	101	101	101	100	91	82	74	67	61	57
	30	87	87	87	87	87	87	87	87	82	74	67	61	57
	40	77	77	77	77	77	77	77	77	77	74	67	61	57
	50	70	70	70	70	70	70	70	70	70	70	67	61	57
	60	65	65	65	65	65	65	65	65	65	65	65	61	57
	70	60	60	60	60	60	60	60	60	60	60	60	60	57
	80	57	57	57	57	57	57	57	57	57	57	57	57	57
	90	54	54	54	54	54	54	54	54	54	54	54	54	54
Zone 2r	0	115	110	104	99	93	87	82	74	67	61	56	52	48
	10	115	110	104	99	93	87	82	74	67	61	56	52	48
	20	101	101	101	99	93	87	82	74	67	61	56	52	48
	30	87	87	87	87	87	87	82	74	67	61	56	52	48
	40	77	77	77	77	77	77	77	74	67	61	56	52	48
	50	70	70	70	70	70	70	70	70	67	61	56	52	48
	60	65	65	65	65	65	65	65	65	65	61	56	52	48
	70	60	60	60	60	60	60	60	60	60	60	56	52	48
	80	57	57	57	57	57	57	57	57	57	57	56	52	48
	90	54	54	54	54	54	54	54	54	54	54	54	52	48
Zone 3	0	119	115	109	104	97	90	84	75	67	60	54	50	46
	10	117	115	109	104	97	90	84	75	67	60	54	50	46
	20	101	101	101	101	97	90	84	75	67	60	54	50	46
	30	87	87	87	87	87	87	84	75	67	60	54	50	46
	40	77	77	77	77	77	77	77	75	67	60	54	50	46
	50	70	70	70	70	70	70	70	70	67	60	54	50	46
	60	65	65	65	65	65	65	65	65	65	60	54	50	46
	70	60	60	60	60	60	60	60	60	60	60	54	50	46
	80	57	57	57	57	57	57	57	57	57	57	54	50	46
	90	54	54	54	54	54	54	54	54	54	54	54	50	46

Notes:

1. Tables are based on critical rail span for load combinations as specified in chapter 2 of the ASCE 7-16 and allowable design loads per the 2015 Aluminum Design Manual.
2. Panels are assumed to be in portrait orientation with a maximum length of 67.5"

Structural ENGINUITY INC
Ingenuity in Engineering

SUNMODO®

Max Rail Spans for SunModo SMR200 Rail System

Table 24a

Mean Roof Height: h ≤ 15 ft
Roof Angle: 27 < θ ≤ 45 degrees
Exposure Category: D
Panel Orientation: Portrait
North/South Support Y_E = 1
Roof Type : Hip

Roof Wind Zone	Ground Snow Load (psf)	Wind Speed (mph)												
		90	95	100	105	110	115	120	130	140	150	160	170	180
Zone 1	0	119	119	119	119	119	119	114	106	98	90	83	76	71
	10	117	117	117	117	117	117	114	106	98	90	83	76	71
	20	101	101	101	101	100	99	98	96	94	90	83	76	71
	30	87	87	87	87	87	87	87	86	84	83	81	76	71
	40	77	77	77	77	77	77	77	77	77	76	74	73	71
	50	70	70	70	70	70	70	70	70	70	70	69	68	67
	60	65	65	65	65	65	65	65	65	65	65	65	64	63
	70	60	60	60	60	60	60	60	60	60	60	60	60	60
	80	57	57	57	57	57	57	57	57	57	57	57	57	57
	90	54	54	54	54	54	54	54	54	54	54	54	54	54
Zone 2e	0	119	119	119	119	119	119	115	105	96	87	79	72	66
	10	117	117	117	117	117	117	115	105	96	87	79	72	66
	20	101	101	101	101	100	99	98	96	94	87	79	72	66
	30	87	87	87	87	87	87	87	86	84	83	79	72	66
	40	77	77	77	77	77	77	77	77	77	76	74	72	66
	50	70	70	70	70	70	70	70	70	70	70	69	68	66
	60	65	65	65	65	65	65	65	65	65	65	65	64	63
	70	60	60	60	60	60	60	60	60	60	60	60	60	60
	80	57	57	57	57	57	57	57	57	57	57	57	57	57
	90	54	54	54	54	54	54	54	54	54	54	54	54	54
Zone 2r	0	119	119	116	110	106	101	95	86	77	70	65	59	55
	10	117	117	116	110	106	101	95	86	77	70	65	59	55
	20	101	101	101	101	100	99	95	86	77	70	65	59	55
	30	87	87	87	87	87	87	87	86	77	70	65	59	55
	40	77	77	77	77	77	77	77	77	77	70	65	59	55
	50	70	70	70	70	70	70	70	70	70	70	65	59	55
	60	65	65	65	65	65	65	65	65	65	65	65	59	55
	70	60	60	60	60	60	60	60	60	60	60	60	59	55
	80	57	57	57	57	57	57	57	57	57	57	57	57	55
	90	54	54	54	54	54	54	54	54	54	54	54	54	54
Zone 3	0	119	119	119	116	110	105	100	88	78	70	64	58	54
	10	117	117	117	116	110	105	100	88	78	70	64	58	54
	20	101	101	101	101	100	99	98	88	78	70	64	58	54
	30	87	87	87	87	87	87	87	86	78	70	64	58	54
	40	77	77	77	77	77	77	77	77	77	70	64	58	54
	50	70	70	70	70	70	70	70	70	70	70	64	58	54
	60	65	65	65	65	65	65	65	65	65	65	64	58	54
	70	60	60	60	60	60	60	60	60	60	60	60	58	54
	80	57	57	57	57	57	57	57	57	57	57	57	57	54
	90	54	54	54	54	54	54	54	54	54	54	54	54	54

Notes:

1. Tables are based on critical rail span for load combinations as specified in chapter 2 of the ASCE 7-16 and allowable design loads per the 2015 Aluminum Design Manual.
2. Panels are assumed to be in portrait orientation with a maximum length of 67.5"

Structural ENGINUITY INC
Ingenuity in Engineering

SUNMODO®

Max Rail Spans for SunModo SMR200 Rail System

Table 24b

Mean Roof Height: h ≤ 15 ft
Roof Angle: 27 < θ ≤ 45 degrees
Exposure Category: D
Panel Orientation: Portrait
North/South Support γ_E = 1.5
Roof Type : Hip

Roof Wind Zone	Ground Snow Load (psf)	Wind Speed (mph)												
		90	95	100	105	110	115	120	130	140	150	160	170	180
Zone 1	0	119	117	112	107	103	97	92	83	76	69	64	59	55
	10	117	117	112	107	103	97	92	83	76	69	64	59	55
	20	101	101	101	101	100	97	92	83	76	69	64	59	55
	30	87	87	87	87	87	87	87	83	76	69	64	59	55
	40	77	77	77	77	77	77	77	77	76	69	64	59	55
	50	70	70	70	70	70	70	70	70	70	69	64	59	55
	60	65	65	65	65	65	65	65	65	65	65	64	59	55
	70	60	60	60	60	60	60	60	60	60	60	60	59	55
	80	57	57	57	57	57	57	57	57	57	57	57	57	55
	90	54	54	54	54	54	54	54	54	54	54	54	54	54
Zone 2e	0	119	118	112	107	102	95	89	79	71	64	58	54	49
	10	117	117	112	107	102	95	89	79	71	64	58	54	49
	20	101	101	101	101	100	95	89	79	71	64	58	54	49
	30	87	87	87	87	87	87	87	79	71	64	58	54	49
	40	77	77	77	77	77	77	77	77	71	64	58	54	49
	50	70	70	70	70	70	70	70	70	70	64	58	54	49
	60	65	65	65	65	65	65	65	65	65	64	58	54	49
	70	60	60	60	60	60	60	60	60	60	60	58	54	49
	80	57	57	57	57	57	57	57	57	57	57	57	54	49
	90	54	54	54	54	54	54	54	54	54	54	54	54	49
Zone 2r	0	105	100	93	87	81	77	72	65	59	54	49	45	42
	10	105	100	93	87	81	77	72	65	59	54	49	45	42
	20	101	100	93	87	81	77	72	65	59	54	49	45	42
	30	87	87	87	87	81	77	72	65	59	54	49	45	42
	40	77	77	77	77	77	77	72	65	59	54	49	45	42
	50	70	70	70	70	70	70	70	65	59	54	49	45	42
	60	65	65	65	65	65	65	65	65	59	54	49	45	42
	70	60	60	60	60	60	60	60	60	59	54	49	45	42
	80	57	57	57	57	57	57	57	57	57	54	49	45	42
	90	54	54	54	54	54	54	54	54	54	54	49	45	42
Zone 3	0	110	104	97	90	83	78	73	64	58	52	47	43	40
	10	110	104	97	90	83	78	73	64	58	52	47	43	40
	20	101	101	97	90	83	78	73	64	58	52	47	43	40
	30	87	87	87	87	83	78	73	64	58	52	47	43	40
	40	77	77	77	77	77	77	73	64	58	52	47	43	40
	50	70	70	70	70	70	70	70	64	58	52	47	43	40
	60	65	65	65	65	65	65	65	64	58	52	47	43	40
	70	60	60	60	60	60	60	60	60	58	52	47	43	40
	80	57	57	57	57	57	57	57	57	57	52	47	43	40
	90	54	54	54	54	54	54	54	54	54	52	47	43	40

Notes:

1. Tables are based on critical rail span for load combinations as specified in chapter 2 of the ASCE 7-16 and allowable design loads per the 2015 Aluminum Design Manual.
2. Panels are assumed to be in portrait orientation with a maximum length of 67.5"

Structural ENGINUITY INC
Ingenuity in Engineering

SUNMODO®

Max Rail Spans for SunModo SMR200 Rail System

Table 25a

Mean Roof Height: 15 < h ≤ 30 ft
Roof Angle: 0 < θ ≤ 7 degrees
Exposure Category: B
Panel Orientation: Portrait
North/South Support Y_E = 1
Roof Type : Gable

Roof Wind Zone	Ground Snow Load (psf)	Wind Speed (mph)												
		90	95	100	105	110	115	120	130	140	150	160	170	180
Zone 1'	0	119	119	119	119	119	119	119	119	119	119	119	117	111
	10	113	113	113	113	113	113	113	113	113	113	112	111	110
	20	89	89	89	89	89	89	89	89	89	89	89	89	89
	30	87	87	87	87	87	87	87	87	87	87	87	87	87
	40	77	77	77	77	77	77	77	77	77	77	77	77	77
	50	70	70	70	70	70	70	70	70	70	70	70	70	70
	60	64	64	64	64	64	64	64	64	64	64	64	64	64
	70	60	60	60	60	60	60	60	60	60	60	60	60	60
	80	56	56	56	56	56	56	56	56	56	56	56	56	56
	90	53	53	53	53	53	53	53	53	53	53	53	53	53
Zone 1	0	119	119	119	119	119	119	119	118	110	103	98	93	86
	10	113	113	113	113	113	113	113	113	110	103	98	93	86
	20	89	89	89	89	89	89	89	89	89	89	89	89	86
	30	87	87	87	87	87	87	87	87	87	87	87	87	86
	40	77	77	77	77	77	77	77	77	77	77	77	77	77
	50	70	70	70	70	70	70	70	70	70	70	70	70	70
	60	64	64	64	64	64	64	64	64	64	64	64	64	64
	70	60	60	60	60	60	60	60	60	60	60	60	60	60
	80	56	56	56	56	56	56	56	56	56	56	56	56	56
	90	53	53	53	53	53	53	53	53	53	53	53	53	53
Zone 2	0	119	119	119	119	119	114	110	102	96	89	82	76	70
	10	113	113	113	113	113	113	110	102	96	89	82	76	70
	20	89	89	89	89	89	89	89	89	89	89	82	76	70
	30	87	87	87	87	87	87	87	87	87	87	82	76	70
	40	77	77	77	77	77	77	77	77	77	77	77	76	70
	50	70	70	70	70	70	70	70	70	70	70	70	70	70
	60	64	64	64	64	64	64	64	64	64	64	64	64	64
	70	60	60	60	60	60	60	60	60	60	60	60	60	60
	80	56	56	56	56	56	56	56	56	56	56	56	56	56
	90	53	53	53	53	53	53	53	53	53	53	53	53	53
Zone 3	0	119	119	114	109	105	100	97	89	80	73	67	62	57
	10	113	113	113	109	105	100	97	89	80	73	67	62	57
	20	89	89	89	89	89	89	89	89	80	73	67	62	57
	30	87	87	87	87	87	87	87	87	80	73	67	62	57
	40	77	77	77	77	77	77	77	77	77	73	67	62	57
	50	70	70	70	70	70	70	70	70	70	70	67	62	57
	60	64	64	64	64	64	64	64	64	64	64	64	62	57
	70	60	60	60	60	60	60	60	60	60	60	60	60	57
	80	56	56	56	56	56	56	56	56	56	56	56	56	56
	90	53	53	53	53	53	53	53	53	53	53	53	53	53

Notes:

1. Tables are based on critical rail span for load combinations as specified in chapter 2 of the ASCE 7-16 and allowable design loads per the 2015 Aluminum Design Manual.
2. Panels are assumed to be in portrait orientation with a maximum length of 67.5"

Structural ENGINUITY INC
Ingenuity in Engineering

SUNMODO®

Max Rail Spans for SunModo SMR200 Rail System

Table 25b

Mean Roof Height: 15 < h ≤ 30 ft
Roof Angle: 0 < θ ≤ 7 degrees
Exposure Category: B
Panel Orientation: Portrait
North/South Support γ_E = 1.5
Roof Type : Gable

Roof Wind Zone	Ground Snow Load (psf)	Wind Speed (mph)												
		90	95	100	105	110	115	120	130	140	150	160	170	180
Zone 1'	0	119	119	119	119	119	119	119	119	116	109	103	98	94
	10	113	113	113	113	113	113	113	113	113	109	103	98	94
	20	89	89	89	89	89	89	89	89	89	89	89	89	89
	30	87	87	87	87	87	87	87	87	87	87	87	87	87
	40	77	77	77	77	77	77	77	77	77	77	77	77	77
	50	70	70	70	70	70	70	70	70	70	70	70	70	70
	60	64	64	64	64	64	64	64	64	64	64	64	64	64
	70	60	60	60	60	60	60	60	60	60	60	60	60	60
	80	56	56	56	56	56	56	56	56	56	56	56	56	56
	90	53	53	53	53	53	53	53	53	53	53	53	53	53
Zone 1	0	119	119	119	119	114	109	105	98	92	83	77	71	66
	10	113	113	113	113	113	109	105	98	92	83	77	71	66
	20	89	89	89	89	89	89	89	89	89	83	77	71	66
	30	87	87	87	87	87	87	87	87	87	83	77	71	66
	40	77	77	77	77	77	77	77	77	77	77	77	71	66
	50	70	70	70	70	70	70	70	70	70	70	70	70	66
	60	64	64	64	64	64	64	64	64	64	64	64	64	64
	70	60	60	60	60	60	60	60	60	60	60	60	60	60
	80	56	56	56	56	56	56	56	56	56	56	56	56	56
	90	53	53	53	53	53	53	53	53	53	53	53	53	53
Zone 2	0	119	113	108	103	99	96	92	82	75	68	63	58	54
	10	113	113	108	103	99	96	92	82	75	68	63	58	54
	20	89	89	89	89	89	89	89	82	75	68	63	58	54
	30	87	87	87	87	87	87	87	82	75	68	63	58	54
	40	77	77	77	77	77	77	77	77	75	68	63	58	54
	50	70	70	70	70	70	70	70	70	70	68	63	58	54
	60	64	64	64	64	64	64	64	64	64	64	63	58	54
	70	60	60	60	60	60	60	60	60	60	60	60	58	54
	80	56	56	56	56	56	56	56	56	56	56	56	56	54
	90	53	53	53	53	53	53	53	53	53	53	53	53	53
Zone 3	0	104	99	95	90	84	79	75	67	61	56	51	48	44
	10	104	99	95	90	84	79	75	67	61	56	51	48	44
	20	89	89	89	89	84	79	75	67	61	56	51	48	44
	30	87	87	87	87	84	79	75	67	61	56	51	48	44
	40	77	77	77	77	77	77	75	67	61	56	51	48	44
	50	70	70	70	70	70	70	70	67	61	56	51	48	44
	60	64	64	64	64	64	64	64	64	61	56	51	48	44
	70	60	60	60	60	60	60	60	60	60	56	51	48	44
	80	56	56	56	56	56	56	56	56	56	56	51	48	44
	90	53	53	53	53	53	53	53	53	53	53	51	48	44

Notes:

1. Tables are based on critical rail span for load combinations as specified in chapter 2 of the ASCE 7-16 and allowable design loads per the 2015 Aluminum Design Manual.
2. Panels are assumed to be in portrait orientation with a maximum length of 67.5"

Structural ENGINUITY INC
Ingenuity in Engineering

SUNMODO®

Max Rail Spans for SunModo SMR200 Rail System

Table 26a

Mean Roof Height: 15 < h ≤ 30 ft
Roof Angle: 0 < θ ≤ 7 degrees
Exposure Category: C
Panel Orientation: Portrait
North/South Support Y_E = 1
Roof Type : Gable

Roof Wind Zone	Ground Snow Load (psf)	Wind Speed (mph)												
		90	95	100	105	110	115	120	130	140	150	160	170	180
Zone 1'	0	119	119	119	119	119	119	119	119	119	113	107	101	97
	10	113	113	113	113	113	113	113	112	111	110	107	101	97
	20	89	89	89	89	89	89	89	89	89	89	89	89	89
	30	87	87	87	87	87	87	87	87	87	87	87	87	87
	40	77	77	77	77	77	77	77	77	77	77	77	77	77
	50	70	70	70	70	70	70	70	70	70	70	70	70	70
	60	64	64	64	64	64	64	64	64	64	64	64	64	64
	70	60	60	60	60	60	60	60	60	60	60	60	60	60
	80	56	56	56	56	56	56	56	56	56	56	56	56	56
	90	53	53	53	53	53	53	53	53	53	53	53	53	53
Zone 1	0	119	119	119	119	118	113	109	101	95	87	80	74	69
	10	113	113	113	113	113	113	109	101	95	87	80	74	69
	20	89	89	89	89	89	89	89	89	89	87	80	74	69
	30	87	87	87	87	87	87	87	87	87	87	80	74	69
	40	77	77	77	77	77	77	77	77	77	77	77	74	69
	50	70	70	70	70	70	70	70	70	70	70	70	70	69
	60	64	64	64	64	64	64	64	64	64	64	64	64	64
	70	60	60	60	60	60	60	60	60	60	60	60	60	60
	80	56	56	56	56	56	56	56	56	56	56	56	56	56
	90	53	53	53	53	53	53	53	53	53	53	53	53	53
Zone 2	0	119	117	111	107	102	98	95	86	78	71	66	61	57
	10	113	113	111	107	102	98	95	86	78	71	66	61	57
	20	89	89	89	89	89	89	89	86	78	71	66	61	57
	30	87	87	87	87	87	87	87	86	78	71	66	61	57
	40	77	77	77	77	77	77	77	77	77	71	66	61	57
	50	70	70	70	70	70	70	70	70	70	70	66	61	57
	60	64	64	64	64	64	64	64	64	64	64	64	61	57
	70	60	60	60	60	60	60	60	60	60	60	60	60	57
	80	56	56	56	56	56	56	56	56	56	56	56	56	56
	90	53	53	53	53	53	53	53	53	53	53	53	53	53
Zone 3	0	108	103	98	94	88	83	79	71	64	58	54	50	46
	10	108	103	98	94	88	83	79	71	64	58	54	50	46
	20	89	89	89	89	88	83	79	71	64	58	54	50	46
	30	87	87	87	87	87	83	79	71	64	58	54	50	46
	40	77	77	77	77	77	77	77	71	64	58	54	50	46
	50	70	70	70	70	70	70	70	70	64	58	54	50	46
	60	64	64	64	64	64	64	64	64	64	58	54	50	46
	70	60	60	60	60	60	60	60	60	60	58	54	50	46
	80	56	56	56	56	56	56	56	56	56	56	54	50	46
	90	53	53	53	53	53	53	53	53	53	53	53	50	46

Notes:

1. Tables are based on critical rail span for load combinations as specified in chapter 2 of the ASCE 7-16 and allowable design loads per the 2015 Aluminum Design Manual.
2. Panels are assumed to be in portrait orientation with a maximum length of 67.5"

Structural ENGINUITY INC
Ingenuity in Engineering

SUNMODO®

Max Rail Spans for SunModo SMR200 Rail System

Table 26b

Mean Roof Height: 15 < h ≤ 30 ft
Roof Angle: 0 < θ ≤ 7 degrees
Exposure Category: C
Panel Orientation: Portrait
North/South Support γ_E = 1.5
Roof Type : Gable

Roof Wind Zone	Ground Snow Load (psf)	Wind Speed (mph)												
		90	95	100	105	110	115	120	130	140	150	160	170	180
Zone 1'	0	119	119	119	119	119	119	115	107	101	95	89	82	77
	10	113	113	113	113	113	113	113	107	101	95	89	82	77
	20	89	89	89	89	89	89	89	89	89	89	89	82	77
	30	87	87	87	87	87	87	87	87	87	87	87	82	77
	40	77	77	77	77	77	77	77	77	77	77	77	77	77
	50	70	70	70	70	70	70	70	70	70	70	70	70	70
	60	64	64	64	64	64	64	64	64	64	64	64	64	64
	70	60	60	60	60	60	60	60	60	60	60	60	60	60
	80	56	56	56	56	56	56	56	56	56	56	56	56	56
	90	53	53	53	53	53	53	53	53	53	53	53	53	53
Zone 1	0	117	112	107	102	98	94	90	81	73	67	62	57	53
	10	113	112	107	102	98	94	90	81	73	67	62	57	53
	20	89	89	89	89	89	89	89	81	73	67	62	57	53
	30	87	87	87	87	87	87	87	81	73	67	62	57	53
	40	77	77	77	77	77	77	77	77	73	67	62	57	53
	50	70	70	70	70	70	70	70	70	70	67	62	57	53
	60	64	64	64	64	64	64	64	64	64	64	62	57	53
	70	60	60	60	60	60	60	60	60	60	60	60	57	53
	80	56	56	56	56	56	56	56	56	56	56	56	56	53
	90	53	53	53	53	53	53	53	53	53	53	53	53	53
Zone 2	0	102	97	93	87	82	78	73	66	60	55	51	47	44
	10	102	97	93	87	82	78	73	66	60	55	51	47	44
	20	89	89	89	87	82	78	73	66	60	55	51	47	44
	30	87	87	87	87	82	78	73	66	60	55	51	47	44
	40	77	77	77	77	77	77	73	66	60	55	51	47	44
	50	70	70	70	70	70	70	70	66	60	55	51	47	44
	60	64	64	64	64	64	64	64	64	60	55	51	47	44
	70	60	60	60	60	60	60	60	60	60	55	51	47	44
	80	56	56	56	56	56	56	56	56	56	55	51	47	44
	90	53	53	53	53	53	53	53	53	53	53	51	47	44
Zone 3	0	88	82	76	72	67	63	60	54	49	45	42	39	37
	10	88	82	76	72	67	63	60	54	49	45	42	39	37
	20	88	82	76	72	67	63	60	54	49	45	42	39	37
	30	87	82	76	72	67	63	60	54	49	45	42	39	37
	40	77	77	76	72	67	63	60	54	49	45	42	39	37
	50	70	70	70	70	67	63	60	54	49	45	42	39	37
	60	64	64	64	64	64	63	60	54	49	45	42	39	37
	70	60	60	60	60	60	60	60	54	49	45	42	39	37
	80	56	56	56	56	56	56	56	54	49	45	42	39	37
	90	53	53	53	53	53	53	53	53	49	45	42	39	37

Notes:

1. Tables are based on critical rail span for load combinations as specified in chapter 2 of the ASCE 7-16 and allowable design loads per the 2015 Aluminum Design Manual.
2. Panels are assumed to be in portrait orientation with a maximum length of 67.5"

Structural ENGINUITY INC
Ingenuity in Engineering

SUNMODO®

Max Rail Spans for SunModo SMR200 Rail System

Table 27a

Mean Roof Height: 15 < h ≤ 30 ft
Roof Angle: 0 < θ ≤ 7 degrees
Exposure Category: D
Panel Orientation: Portrait
North/South Support Y_E = 1
Roof Type : Gable

Roof Wind Zone	Ground Snow Load (psf)	Wind Speed (mph)												
		90	95	100	105	110	115	120	130	140	150	160	170	180
Zone 1'	0	119	119	119	119	119	119	119	119	111	105	99	94	89
	10	113	113	113	113	113	113	112	111	110	105	99	94	89
	20	89	89	89	89	89	89	89	89	89	89	89	89	88
	30	87	87	87	87	87	87	87	87	87	87	87	87	86
	40	77	77	77	77	77	77	77	77	77	77	77	77	77
	50	70	70	70	70	70	70	70	70	70	70	70	70	70
	60	64	64	64	64	64	64	64	64	64	64	64	64	64
	70	60	60	60	60	60	60	60	60	60	60	60	60	60
	80	56	56	56	56	56	56	56	56	56	56	56	56	56
	90	53	53	53	53	53	53	53	53	53	53	53	53	53
Zone 1	0	119	119	119	114	109	105	101	94	86	78	72	66	62
	10	113	113	113	113	109	105	101	94	86	78	72	66	62
	20	89	89	89	89	89	89	89	89	86	78	72	66	62
	30	87	87	87	87	87	87	87	87	86	78	72	66	62
	40	77	77	77	77	77	77	77	77	77	77	72	66	62
	50	70	70	70	70	70	70	70	70	70	70	70	66	62
	60	64	64	64	64	64	64	64	64	64	64	64	64	62
	70	60	60	60	60	60	60	60	60	60	60	60	60	60
	80	56	56	56	56	56	56	56	56	56	56	56	56	56
	90	53	53	53	53	53	53	53	53	53	53	53	53	53
Zone 2	0	114	108	103	99	95	91	86	77	70	64	59	55	51
	10	113	108	103	99	95	91	86	77	70	64	59	55	51
	20	89	89	89	89	89	89	86	77	70	64	59	55	51
	30	87	87	87	87	87	87	86	77	70	64	59	55	51
	40	77	77	77	77	77	77	77	77	70	64	59	55	51
	50	70	70	70	70	70	70	70	70	70	64	59	55	51
	60	64	64	64	64	64	64	64	64	64	64	59	55	51
	70	60	60	60	60	60	60	60	60	60	60	59	55	51
	80	56	56	56	56	56	56	56	56	56	56	56	55	51
	90	53	53	53	53	53	53	53	53	53	53	53	53	51
Zone 3	0	100	95	90	84	79	74	70	63	57	52	48	45	42
	10	100	95	90	84	79	74	70	63	57	52	48	45	42
	20	89	89	89	84	79	74	70	63	57	52	48	45	42
	30	87	87	87	84	79	74	70	63	57	52	48	45	42
	40	77	77	77	77	77	74	70	63	57	52	48	45	42
	50	70	70	70	70	70	70	70	63	57	52	48	45	42
	60	64	64	64	64	64	64	64	63	57	52	48	45	42
	70	60	60	60	60	60	60	60	60	57	52	48	45	42
	80	56	56	56	56	56	56	56	56	56	52	48	45	42
	90	53	53	53	53	53	53	53	53	53	52	48	45	42

Notes:

1. Tables are based on critical rail span for load combinations as specified in chapter 2 of the ASCE 7-16 and allowable design loads per the 2015 Aluminum Design Manual.
2. Panels are assumed to be in portrait orientation with a maximum length of 67.5"

Structural ENGINUITY INC
Ingenuity in Engineering

SUNMODO®

Max Rail Spans for SunModo SMR200 Rail System

Table 27b

Mean Roof Height: 15 < h ≤ 30 ft
Roof Angle: 0 < θ ≤ 7 degrees
Exposure Category: D
Panel Orientation: Portrait
North/South Support γ_E = 1.5
Roof Type : Gable

Roof Wind Zone	Ground Snow Load (psf)	Wind Speed (mph)												
		90	95	100	105	110	115	120	130	140	150	160	170	180
Zone 1'	0	119	119	119	119	115	111	107	100	94	86	80	74	69
	10	113	113	113	113	113	111	107	100	94	86	80	74	69
	20	89	89	89	89	89	89	89	89	89	86	80	74	69
	30	87	87	87	87	87	87	87	87	87	86	80	74	69
	40	77	77	77	77	77	77	77	77	77	77	77	74	69
	50	70	70	70	70	70	70	70	70	70	70	70	70	69
	60	64	64	64	64	64	64	64	64	64	64	64	64	64
	70	60	60	60	60	60	60	60	60	60	60	60	60	60
	80	56	56	56	56	56	56	56	56	56	56	56	56	56
	90	53	53	53	53	53	53	53	53	53	53	53	53	53
Zone 1	0	109	103	99	95	90	85	80	72	66	60	55	51	48
	10	109	103	99	95	90	85	80	72	66	60	55	51	48
	20	89	89	89	89	89	85	80	72	66	60	55	51	48
	30	87	87	87	87	87	85	80	72	66	60	55	51	48
	40	77	77	77	77	77	77	77	72	66	60	55	51	48
	50	70	70	70	70	70	70	70	70	66	60	55	51	48
	60	64	64	64	64	64	64	64	64	64	60	55	51	48
	70	60	60	60	60	60	60	60	60	60	60	55	51	48
	80	56	56	56	56	56	56	56	56	56	56	55	51	48
	90	53	53	53	53	53	53	53	53	53	53	53	51	48
Zone 2	0	95	89	83	78	74	69	66	59	54	50	46	43	40
	10	95	89	83	78	74	69	66	59	54	50	46	43	40
	20	89	89	83	78	74	69	66	59	54	50	46	43	40
	30	87	87	83	78	74	69	66	59	54	50	46	43	40
	40	77	77	77	77	74	69	66	59	54	50	46	43	40
	50	70	70	70	70	70	69	66	59	54	50	46	43	40
	60	64	64	64	64	64	64	64	59	54	50	46	43	40
	70	60	60	60	60	60	60	60	59	54	50	46	43	40
	80	56	56	56	56	56	56	56	56	54	50	46	43	40
	90	53	53	53	53	53	53	53	53	53	50	46	43	40
Zone 3	0	79	73	68	64	60	57	54	49	44	41	38	36	34
	10	79	73	68	64	60	57	54	49	44	41	38	36	34
	20	79	73	68	64	60	57	54	49	44	41	38	36	34
	30	79	73	68	64	60	57	54	49	44	41	38	36	34
	40	77	73	68	64	60	57	54	49	44	41	38	36	34
	50	70	70	68	64	60	57	54	49	44	41	38	36	34
	60	64	64	64	64	60	57	54	49	44	41	38	36	34
	70	60	60	60	60	60	57	54	49	44	41	38	36	34
	80	56	56	56	56	56	56	54	49	44	41	38	36	34
	90	53	53	53	53	53	53	53	49	44	41	38	36	34

Notes:

1. Tables are based on critical rail span for load combinations as specified in chapter 2 of the ASCE 7-16 and allowable design loads per the 2015 Aluminum Design Manual.
2. Panels are assumed to be in portrait orientation with a maximum length of 67.5"

Structural ENGINUITY INC
Ingenuity in Engineering

SUNMODO®

Max Rail Spans for SunModo SMR200 Rail System

Table 28a

Mean Roof Height: 15 < h ≤ 30 ft
Roof Angle: 7 < θ ≤ 20 degrees
Exposure Category: B
Panel Orientation: Portrait
North/South Support Y_E = 1
Roof Type : Gable

Roof Wind Zone	Ground Snow Load (psf)	Wind Speed (mph)												
		90	95	100	105	110	115	120	130	140	150	160	170	180
Zones 1 & 2e	0	119	119	119	119	119	119	119	110	102	94	84	78	73
	10	107	107	107	107	107	107	107	107	102	94	84	78	73
	20	82	82	82	82	82	82	82	82	82	82	82	78	73
	30	82	82	82	82	82	82	82	82	82	82	82	78	73
	40	73	73	73	73	73	73	73	73	73	73	73	73	73
	50	66	66	66	66	66	66	66	66	66	66	66	66	66
	60	60	60	60	60	60	60	60	60	60	60	60	60	60
	70	56	56	56	56	56	56	56	56	56	56	56	56	56
	80	53	53	53	53	53	53	53	53	53	53	53	53	53
	90	50	50	50	50	50	50	50	50	50	50	50	50	50
Zones 2n, 2r, & 3e	0	119	119	119	116	111	106	102	95	85	77	71	65	60
	10	107	107	107	107	107	106	102	95	85	77	71	65	60
	20	82	82	82	82	82	82	82	82	82	77	71	65	60
	30	82	82	82	82	82	82	82	82	82	77	71	65	60
	40	73	73	73	73	73	73	73	73	73	73	71	65	60
	50	66	66	66	66	66	66	66	66	66	66	66	65	60
	60	60	60	60	60	60	60	60	60	60	60	60	60	60
	70	56	56	56	56	56	56	56	56	56	56	56	56	56
	80	53	53	53	53	53	53	53	53	53	53	53	53	53
	90	50	50	50	50	50	50	50	50	50	50	50	50	50
Zone 3r	0	119	118	112	107	102	98	94	84	75	68	63	58	53
	10	107	107	107	107	102	98	94	84	75	68	63	58	53
	20	82	82	82	82	82	82	82	82	75	68	63	58	53
	30	82	82	82	82	82	82	82	82	75	68	63	58	53
	40	73	73	73	73	73	73	73	73	73	68	63	58	53
	50	66	66	66	66	66	66	66	66	66	66	63	58	53
	60	60	60	60	60	60	60	60	60	60	60	60	58	53
	70	56	56	56	56	56	56	56	56	56	56	56	56	53
	80	53	53	53	53	53	53	53	53	53	53	53	53	53
	90	50	50	50	50	50	50	50	50	50	50	50	50	50

Notes:

1. Tables are based on critical rail span for load combinations as specified in chapter 2 of the ASCE 7-16 and allowable design loads per the 2015 Aluminum Design Manual.
2. Panels are assumed to be in portrait orientation with a maximum length of 67.5"

Structural ENGINUITY INC
Ingenuity in Engineering

SUNMODO®

Max Rail Spans for SunModo SMR200 Rail System

Table 28b

Mean Roof Height: 15 < h ≤ 30 ft
Roof Angle: 7 < θ ≤ 20 degrees
Exposure Category: B
Panel Orientation: Portrait
North/South Support γ_E = 1.5
Roof Type : Gable

Roof Wind Zone	Ground Snow Load (psf)	Wind Speed (mph)												
		90	95	100	105	110	115	120	130	140	150	160	170	180
Zones 1 & 2e	0	119	119	118	111	106	101	97	85	78	71	66	62	58
	10	107	107	107	107	106	101	97	85	78	71	66	62	58
	20	82	82	82	82	82	82	82	82	78	71	66	62	58
	30	82	82	82	82	82	82	82	82	78	71	66	62	58
	40	73	73	73	73	73	73	73	73	73	71	66	62	58
	50	66	66	66	66	66	66	66	66	66	66	66	62	58
	60	60	60	60	60	60	60	60	60	60	60	60	60	58
	70	56	56	56	56	56	56	56	56	56	56	56	56	56
	80	53	53	53	53	53	53	53	53	53	53	53	53	53
	90	50	50	50	50	50	50	50	50	50	50	50	50	50
Zones 2n, 2r, & 3e	0	111	105	100	96	90	84	80	71	64	59	54	50	46
	10	107	105	100	96	90	84	80	71	64	59	54	50	46
	20	82	82	82	82	82	82	80	71	64	59	54	50	46
	30	82	82	82	82	82	82	80	71	64	59	54	50	46
	40	73	73	73	73	73	73	73	71	64	59	54	50	46
	50	66	66	66	66	66	66	66	66	64	59	54	50	46
	60	60	60	60	60	60	60	60	60	60	59	54	50	46
	70	56	56	56	56	56	56	56	56	56	56	54	50	46
	80	53	53	53	53	53	53	53	53	53	53	53	50	46
	90	50	50	50	50	50	50	50	50	50	50	50	50	46
Zone 3r	0	102	97	91	85	79	75	70	63	57	52	48	44	41
	10	102	97	91	85	79	75	70	63	57	52	48	44	41
	20	82	82	82	82	79	75	70	63	57	52	48	44	41
	30	82	82	82	82	79	75	70	63	57	52	48	44	41
	40	73	73	73	73	73	73	70	63	57	52	48	44	41
	50	66	66	66	66	66	66	66	63	57	52	48	44	41
	60	60	60	60	60	60	60	60	60	57	52	48	44	41
	70	56	56	56	56	56	56	56	56	56	52	48	44	41
	80	53	53	53	53	53	53	53	53	53	52	48	44	41
	90	50	50	50	50	50	50	50	50	50	50	48	44	41

Notes:

1. Tables are based on critical rail span for load combinations as specified in chapter 2 of the ASCE 7-16 and allowable design loads per the 2015 Aluminum Design Manual.
2. Panels are assumed to be in portrait orientation with a maximum length of 67.5"

Max Rail Spans for SunModo SMR200 Rail System

Table 29a

Mean Roof Height: 15 < h ≤ 30 ft
Roof Angle: 7 < θ ≤ 20 degrees
Exposure Category: C
Panel Orientation: Portrait
North/South Support Y_E = 1
Roof Type : Gable

Roof Wind Zone	Ground Snow Load (psf)	Wind Speed (mph)												
		90	95	100	105	110	115	120	130	140	150	160	170	180
Zones 1 & 2e	0	119	119	119	116	110	105	100	90	81	74	69	64	60
	10	107	107	107	107	107	105	100	90	81	74	69	64	60
	20	82	82	82	82	82	82	82	82	81	74	69	64	60
	30	82	82	82	82	82	82	82	82	81	74	69	64	60
	40	73	73	73	73	73	73	73	73	73	73	69	64	60
	50	66	66	66	66	66	66	66	66	66	66	66	64	60
	60	60	60	60	60	60	60	60	60	60	60	60	60	60
	70	56	56	56	56	56	56	56	56	56	56	56	56	56
	80	53	53	53	53	53	53	53	53	53	53	53	53	53
	90	50	50	50	50	50	50	50	50	50	50	50	50	50
Zones 2n, 2r, & 3e	0	115	109	104	99	95	89	84	75	67	61	56	52	48
	10	107	107	104	99	95	89	84	75	67	61	56	52	48
	20	82	82	82	82	82	82	82	75	67	61	56	52	48
	30	82	82	82	82	82	82	82	75	67	61	56	52	48
	40	73	73	73	73	73	73	73	73	67	61	56	52	48
	50	66	66	66	66	66	66	66	66	66	61	56	52	48
	60	60	60	60	60	60	60	60	60	60	60	56	52	48
	70	56	56	56	56	56	56	56	56	56	56	56	52	48
	80	53	53	53	53	53	53	53	53	53	53	53	52	48
	90	50	50	50	50	50	50	50	50	50	50	50	50	48
Zone 3r	0	106	100	96	89	83	78	74	66	60	54	50	46	43
	10	106	100	96	89	83	78	74	66	60	54	50	46	43
	20	82	82	82	82	82	78	74	66	60	54	50	46	43
	30	82	82	82	82	82	78	74	66	60	54	50	46	43
	40	73	73	73	73	73	73	73	66	60	54	50	46	43
	50	66	66	66	66	66	66	66	66	60	54	50	46	43
	60	60	60	60	60	60	60	60	60	60	54	50	46	43
	70	56	56	56	56	56	56	56	56	56	54	50	46	43
	80	53	53	53	53	53	53	53	53	53	53	50	46	43
	90	50	50	50	50	50	50	50	50	50	50	50	46	43

Notes:

1. Tables are based on critical rail span for load combinations as specified in chapter 2 of the ASCE 7-16 and allowable design loads per the 2015 Aluminum Design Manual.
2. Panels are assumed to be in portrait orientation with a maximum length of 67.5"

Structural ENGINUITY INC
Ingenuity in Engineering

SUNMODO®

Max Rail Spans for SunModo SMR200 Rail System

Table 29b

Mean Roof Height: 15 < h ≤ 30 ft
Roof Angle: 7 < θ ≤ 20 degrees
Exposure Category: C
Panel Orientation: Portrait
North/South Support γ_E = 1.5
Roof Type : Gable

Roof Wind Zone	Ground Snow Load (psf)	Wind Speed (mph)												
		90	95	100	105	110	115	120	130	140	150	160	170	180
Zones 1 & 2e	0	110	103	98	92	85	80	76	69	64	59	54	51	47
	10	107	103	98	92	85	80	76	69	64	59	54	51	47
	20	82	82	82	82	82	80	76	69	64	59	54	51	47
	30	82	82	82	82	82	80	76	69	64	59	54	51	47
	40	73	73	73	73	73	73	73	69	64	59	54	51	47
	50	66	66	66	66	66	66	66	66	64	59	54	51	47
	60	60	60	60	60	60	60	60	60	60	59	54	51	47
	70	56	56	56	56	56	56	56	56	56	56	54	51	47
	80	53	53	53	53	53	53	53	53	53	53	53	51	47
	90	50	50	50	50	50	50	50	50	50	50	50	50	47
Zones 2n, 2r, & 3e	0	94	87	81	76	71	67	63	57	51	47	43	40	38
	10	94	87	81	76	71	67	63	57	51	47	43	40	38
	20	82	82	81	76	71	67	63	57	51	47	43	40	38
	30	82	82	81	76	71	67	63	57	51	47	43	40	38
	40	73	73	73	73	71	67	63	57	51	47	43	40	38
	50	66	66	66	66	66	66	63	57	51	47	43	40	38
	60	60	60	60	60	60	60	60	57	51	47	43	40	38
	70	56	56	56	56	56	56	56	56	51	47	43	40	38
	80	53	53	53	53	53	53	53	53	51	47	43	40	38
	90	50	50	50	50	50	50	50	50	50	47	43	40	38
Zone 3r	0	83	77	72	67	63	59	56	50	46	42	39	37	35
	10	83	77	72	67	63	59	56	50	46	42	39	37	35
	20	82	77	72	67	63	59	56	50	46	42	39	37	35
	30	82	77	72	67	63	59	56	50	46	42	39	37	35
	40	73	73	72	67	63	59	56	50	46	42	39	37	35
	50	66	66	66	66	63	59	56	50	46	42	39	37	35
	60	60	60	60	60	60	59	56	50	46	42	39	37	35
	70	56	56	56	56	56	56	56	50	46	42	39	37	35
	80	53	53	53	53	53	53	53	50	46	42	39	37	35
	90	50	50	50	50	50	50	50	50	46	42	39	37	35

Notes:

1. Tables are based on critical rail span for load combinations as specified in chapter 2 of the ASCE 7-16 and allowable design loads per the 2015 Aluminum Design Manual.
2. Panels are assumed to be in portrait orientation with a maximum length of 67.5"

Max Rail Spans for SunModo SMR200 Rail System

Table 30a

Mean Roof Height: 15 < h ≤ 30 ft
Roof Angle: 7 < θ ≤ 20 degrees
Exposure Category: D
Panel Orientation: Portrait
North/South Support $Y_E = 1$
Roof Type : Gable

Roof Wind Zone	Ground Snow Load (psf)	Wind Speed (mph)												
		90	95	100	105	110	115	120	130	140	150	160	170	180
Zones 1 & 2e	0	119	118	111	105	100	96	89	80	73	67	62	58	54
	10	107	107	107	105	100	96	89	80	73	67	62	58	54
	20	82	82	82	82	82	82	82	80	73	67	62	58	54
	30	82	82	82	82	82	82	82	80	73	67	62	58	54
	40	73	73	73	73	73	73	73	73	73	67	62	58	54
	50	66	66	66	66	66	66	66	66	66	66	62	58	54
	60	60	60	60	60	60	60	60	60	60	60	60	58	54
	70	56	56	56	56	56	56	56	56	56	56	56	56	54
	80	53	53	53	53	53	53	53	53	53	53	53	53	53
	90	50	50	50	50	50	50	50	50	50	50	50	50	50
Zones 2n, 2r, & 3e	0	106	100	96	90	84	79	74	67	60	55	50	46	43
	10	106	100	96	90	84	79	74	67	60	55	50	46	43
	20	82	82	82	82	82	79	74	67	60	55	50	46	43
	30	82	82	82	82	82	79	74	67	60	55	50	46	43
	40	73	73	73	73	73	73	73	67	60	55	50	46	43
	50	66	66	66	66	66	66	66	66	60	55	50	46	43
	60	60	60	60	60	60	60	60	60	60	55	50	46	43
	70	56	56	56	56	56	56	56	56	56	55	50	46	43
	80	53	53	53	53	53	53	53	53	53	53	50	46	43
	90	50	50	50	50	50	50	50	50	50	50	50	46	43
Zone 3r	0	98	91	85	79	74	70	66	59	53	49	45	41	39
	10	98	91	85	79	74	70	66	59	53	49	45	41	39
	20	82	82	82	79	74	70	66	59	53	49	45	41	39
	30	82	82	82	79	74	70	66	59	53	49	45	41	39
	40	73	73	73	73	73	70	66	59	53	49	45	41	39
	50	66	66	66	66	66	66	66	59	53	49	45	41	39
	60	60	60	60	60	60	60	60	59	53	49	45	41	39
	70	56	56	56	56	56	56	56	56	53	49	45	41	39
	80	53	53	53	53	53	53	53	53	53	49	45	41	39
	90	50	50	50	50	50	50	50	50	50	49	45	41	39

Notes:

1. Tables are based on critical rail span for load combinations as specified in chapter 2 of the ASCE 7-16 and allowable design loads per the 2015 Aluminum Design Manual.
2. Panels are assumed to be in portrait orientation with a maximum length of 67.5"

Structural ENGINUITY INC
Ingenuity in Engineering

SUNMODO®

Max Rail Spans for SunModo SMR200 Rail System

Table 30b

Mean Roof Height: 15 < h ≤ 30 ft
Roof Angle: 7 < θ ≤ 20 degrees
Exposure Category: D
Panel Orientation: Portrait
North/South Support γ_E = 1.5
Roof Type : Gable

Roof Wind Zone	Ground Snow Load (psf)	Wind Speed (mph)												
		90	95	100	105	110	115	120	130	140	150	160	170	180
Zones 1 & 2e	0	100	94	86	81	77	73	69	63	58	53	49	46	43
	10	100	94	86	81	77	73	69	63	58	53	49	46	43
	20	82	82	82	81	77	73	69	63	58	53	49	46	43
	30	82	82	82	81	77	73	69	63	58	53	49	46	43
	40	73	73	73	73	73	73	69	63	58	53	49	46	43
	50	66	66	66	66	66	66	66	63	58	53	49	46	43
	60	60	60	60	60	60	60	60	60	58	53	49	46	43
	70	56	56	56	56	56	56	56	56	56	53	49	46	43
	80	53	53	53	53	53	53	53	53	53	53	49	46	43
	90	50	50	50	50	50	50	50	50	50	50	49	46	43
Zones 2n, 2r, & 3e	0	84	77	72	67	63	60	56	51	46	42	39	37	35
	10	84	77	72	67	63	60	56	51	46	42	39	37	35
	20	82	77	72	67	63	60	56	51	46	42	39	37	35
	30	82	77	72	67	63	60	56	51	46	42	39	37	35
	40	73	73	72	67	63	60	56	51	46	42	39	37	35
	50	66	66	66	66	63	60	56	51	46	42	39	37	35
	60	60	60	60	60	60	60	56	51	46	42	39	37	35
	70	56	56	56	56	56	56	56	51	46	42	39	37	35
	80	53	53	53	53	53	53	53	51	46	42	39	37	35
	90	50	50	50	50	50	50	50	50	46	42	39	37	35
Zone 3r	0	74	69	64	60	56	53	50	45	41	38	36	34	32
	10	74	69	64	60	56	53	50	45	41	38	36	34	32
	20	74	69	64	60	56	53	50	45	41	38	36	34	32
	30	74	69	64	60	56	53	50	45	41	38	36	34	32
	40	73	69	64	60	56	53	50	45	41	38	36	34	32
	50	66	66	64	60	56	53	50	45	41	38	36	34	32
	60	60	60	60	60	56	53	50	45	41	38	36	34	32
	70	56	56	56	56	56	53	50	45	41	38	36	34	32
	80	53	53	53	53	53	53	50	45	41	38	36	34	32
	90	50	50	50	50	50	50	50	45	41	38	36	34	32

Notes:

1. Tables are based on critical rail span for load combinations as specified in chapter 2 of the ASCE 7-16 and allowable design loads per the 2015 Aluminum Design Manual.
2. Panels are assumed to be in portrait orientation with a maximum length of 67.5"

Max Rail Spans for SunModo SMR200 Rail System

Table 31a

Mean Roof Height: 15 < h ≤ 30 ft
Roof Angle: 20 < θ ≤ 27 degrees
Exposure Category: B
Panel Orientation: Portrait
North/South Support Y_E = 1
Roof Type : Gable

Roof Wind Zone	Ground Snow Load (psf)	Wind Speed (mph)												
		90	95	100	105	110	115	120	130	140	150	160	170	180
Zones 1 & 2e	0	119	119	119	119	119	119	119	119	113	106	100	93	86
	10	116	116	116	116	116	116	116	116	113	106	100	93	86
	20	97	97	97	97	97	97	97	97	97	96	95	93	86
	30	83	83	83	83	83	83	83	83	83	83	83	83	82
	40	73	73	73	73	73	73	73	73	73	73	73	73	73
	50	66	66	66	66	66	66	66	66	66	66	66	66	66
	60	61	61	61	61	61	61	61	61	61	61	61	61	61
	70	57	57	57	57	57	57	57	57	57	57	57	57	57
	80	53	53	53	53	53	53	53	53	53	53	53	53	53
	90	51	51	51	51	51	51	51	51	51	51	51	51	51
Zones 2n, 2r, & 3e	0	119	119	119	119	119	115	110	102	95	86	79	73	67
	10	116	116	116	116	116	115	110	102	95	86	79	73	67
	20	97	97	97	97	97	97	97	97	95	86	79	73	67
	30	83	83	83	83	83	83	83	83	83	83	79	73	67
	40	73	73	73	73	73	73	73	73	73	73	73	73	67
	50	66	66	66	66	66	66	66	66	66	66	66	66	66
	60	61	61	61	61	61	61	61	61	61	61	61	61	61
	70	57	57	57	57	57	57	57	57	57	57	57	57	57
	80	53	53	53	53	53	53	53	53	53	53	53	53	53
	90	51	51	51	51	51	51	51	51	51	51	51	51	51
Zone 3r	0	119	119	119	119	114	109	105	97	87	79	72	66	61
	10	116	116	116	116	114	109	105	97	87	79	72	66	61
	20	97	97	97	97	97	97	97	97	87	79	72	66	61
	30	83	83	83	83	83	83	83	83	83	79	72	66	61
	40	73	73	73	73	73	73	73	73	73	73	72	66	61
	50	66	66	66	66	66	66	66	66	66	66	66	66	61
	60	61	61	61	61	61	61	61	61	61	61	61	61	61
	70	57	57	57	57	57	57	57	57	57	57	57	57	57
	80	53	53	53	53	53	53	53	53	53	53	53	53	53
	90	51	51	51	51	51	51	51	51	51	51	51	51	51

Notes:

1. Tables are based on critical rail span for load combinations as specified in chapter 2 of the ASCE 7-16 and allowable design loads per the 2015 Aluminum Design Manual.
2. Panels are assumed to be in portrait orientation with a maximum length of 67.5"

Structural ENGINUITY INC
Ingenuity in Engineering

SUNMODO®

Max Rail Spans for SunModo SMR200 Rail System

Table 31b

Mean Roof Height: 15 < h ≤ 30 ft
Roof Angle: 20 < θ ≤ 27 degrees
Exposure Category: B
Panel Orientation: Portrait
North/South Support γ_E = 1.5
Roof Type : Gable

Roof Wind Zone	Ground Snow Load (psf)	Wind Speed (mph)												
		90	95	100	105	110	115	120	130	140	150	160	170	180
Zones 1 & 2e	0	119	119	119	119	117	112	108	100	92	84	78	73	68
	10	116	116	116	116	116	112	108	100	92	84	78	73	68
	20	97	97	97	97	97	97	97	97	92	84	78	73	68
	30	83	83	83	83	83	83	83	83	83	83	78	73	68
	40	73	73	73	73	73	73	73	73	73	73	73	73	68
	50	66	66	66	66	66	66	66	66	66	66	66	66	66
	60	61	61	61	61	61	61	61	61	61	61	61	61	61
	70	57	57	57	57	57	57	57	57	57	57	57	57	57
	80	53	53	53	53	53	53	53	53	53	53	53	53	53
	90	51	51	51	51	51	51	51	51	51	51	51	51	51
Zones 2n, 2r, & 3e	0	119	114	108	103	99	94	89	80	72	66	60	56	52
	10	116	114	108	103	99	94	89	80	72	66	60	56	52
	20	97	97	97	97	97	94	89	80	72	66	60	56	52
	30	83	83	83	83	83	83	83	80	72	66	60	56	52
	40	73	73	73	73	73	73	73	73	72	66	60	56	52
	50	66	66	66	66	66	66	66	66	66	66	60	56	52
	60	61	61	61	61	61	61	61	61	61	61	60	56	52
	70	57	57	57	57	57	57	57	57	57	57	57	56	52
	80	53	53	53	53	53	53	53	53	53	53	53	53	52
	90	51	51	51	51	51	51	51	51	51	51	51	51	51
Zone 3r	0	114	108	103	98	92	86	81	73	66	60	55	50	47
	10	114	108	103	98	92	86	81	73	66	60	55	50	47
	20	97	97	97	97	92	86	81	73	66	60	55	50	47
	30	83	83	83	83	83	83	81	73	66	60	55	50	47
	40	73	73	73	73	73	73	73	73	66	60	55	50	47
	50	66	66	66	66	66	66	66	66	66	60	55	50	47
	60	61	61	61	61	61	61	61	61	61	60	55	50	47
	70	57	57	57	57	57	57	57	57	57	57	55	50	47
	80	53	53	53	53	53	53	53	53	53	53	53	50	47
	90	51	51	51	51	51	51	51	51	51	51	51	50	47

Notes:

1. Tables are based on critical rail span for load combinations as specified in chapter 2 of the ASCE 7-16 and allowable design loads per the 2015 Aluminum Design Manual.
2. Panels are assumed to be in portrait orientation with a maximum length of 67.5"

Max Rail Spans for SunModo SMR200 Rail System

Table 32a

Mean Roof Height: 15 < h ≤ 30 ft
Roof Angle: 20 < θ ≤ 27 degrees
Exposure Category: C
Panel Orientation: Portrait
North/South Support Y_E = 1
Roof Type : Gable

Roof Wind Zone	Ground Snow Load (psf)	Wind Speed (mph)												
		90	95	100	105	110	115	120	130	140	150	160	170	180
Zones 1 & 2e	0	119	119	119	119	119	116	111	103	97	88	81	76	71
	10	116	116	116	116	116	116	111	103	97	88	81	76	71
	20	97	97	97	97	97	97	97	96	94	88	81	76	71
	30	83	83	83	83	83	83	83	83	83	82	81	76	71
	40	73	73	73	73	73	73	73	73	73	73	73	72	71
	50	66	66	66	66	66	66	66	66	66	66	66	66	66
	60	61	61	61	61	61	61	61	61	61	61	61	61	61
	70	57	57	57	57	57	57	57	57	57	57	57	57	57
	80	53	53	53	53	53	53	53	53	53	53	53	53	53
	90	51	51	51	51	51	51	51	51	51	51	51	51	51
Zones 2n, 2r, & 3e	0	119	117	112	107	102	98	93	83	75	69	63	58	54
	10	116	116	112	107	102	98	93	83	75	69	63	58	54
	20	97	97	97	97	97	97	93	83	75	69	63	58	54
	30	83	83	83	83	83	83	83	83	75	69	63	58	54
	40	73	73	73	73	73	73	73	73	73	69	63	58	54
	50	66	66	66	66	66	66	66	66	66	66	63	58	54
	60	61	61	61	61	61	61	61	61	61	61	61	58	54
	70	57	57	57	57	57	57	57	57	57	57	57	57	54
	80	53	53	53	53	53	53	53	53	53	53	53	53	53
	90	51	51	51	51	51	51	51	51	51	51	51	51	51
Zone 3r	0	118	112	106	101	97	91	85	76	69	62	57	53	49
	10	116	112	106	101	97	91	85	76	69	62	57	53	49
	20	97	97	97	97	97	91	85	76	69	62	57	53	49
	30	83	83	83	83	83	83	83	76	69	62	57	53	49
	40	73	73	73	73	73	73	73	73	69	62	57	53	49
	50	66	66	66	66	66	66	66	66	66	62	57	53	49
	60	61	61	61	61	61	61	61	61	61	61	57	53	49
	70	57	57	57	57	57	57	57	57	57	57	57	53	49
	80	53	53	53	53	53	53	53	53	53	53	53	53	49
	90	51	51	51	51	51	51	51	51	51	51	51	51	49

Notes:

1. Tables are based on critical rail span for load combinations as specified in chapter 2 of the ASCE 7-16 and allowable design loads per the 2015 Aluminum Design Manual.
2. Panels are assumed to be in portrait orientation with a maximum length of 67.5"

Max Rail Spans for SunModo SMR200 Rail System

Table 32b

Mean Roof Height: 15 < h ≤ 30 ft
Roof Angle: 20 < θ ≤ 27 degrees
Exposure Category: C
Panel Orientation: Portrait
North/South Support γ_E = 1.5
Roof Type : Gable

Roof Wind Zone	Ground Snow Load (psf)	Wind Speed (mph)												
		90	95	100	105	110	115	120	130	140	150	160	170	180
Zones 1 & 2e	0	119	114	109	104	100	96	90	82	75	69	64	60	56
	10	116	114	109	104	100	96	90	82	75	69	64	60	56
	20	97	97	97	97	97	96	90	82	75	69	64	60	56
	30	83	83	83	83	83	83	83	82	75	69	64	60	56
	40	73	73	73	73	73	73	73	73	73	69	64	60	56
	50	66	66	66	66	66	66	66	66	66	66	64	60	56
	60	61	61	61	61	61	61	61	61	61	61	61	60	56
	70	57	57	57	57	57	57	57	57	57	57	57	57	56
	80	53	53	53	53	53	53	53	53	53	53	53	53	53
	90	51	51	51	51	51	51	51	51	51	51	51	51	51
Zones 2n, 2r, & 3e	0	102	97	90	85	79	75	71	63	58	53	48	45	42
	10	102	97	90	85	79	75	71	63	58	53	48	45	42
	20	97	97	90	85	79	75	71	63	58	53	48	45	42
	30	83	83	83	83	79	75	71	63	58	53	48	45	42
	40	73	73	73	73	73	73	71	63	58	53	48	45	42
	50	66	66	66	66	66	66	66	63	58	53	48	45	42
	60	61	61	61	61	61	61	61	61	58	53	48	45	42
	70	57	57	57	57	57	57	57	57	57	53	48	45	42
	80	53	53	53	53	53	53	53	53	53	53	48	45	42
	90	51	51	51	51	51	51	51	51	51	51	48	45	42
Zone 3r	0	97	89	83	77	73	68	64	58	52	47	44	40	38
	10	97	89	83	77	73	68	64	58	52	47	44	40	38
	20	97	89	83	77	73	68	64	58	52	47	44	40	38
	30	83	83	83	77	73	68	64	58	52	47	44	40	38
	40	73	73	73	73	73	68	64	58	52	47	44	40	38
	50	66	66	66	66	66	66	64	58	52	47	44	40	38
	60	61	61	61	61	61	61	61	58	52	47	44	40	38
	70	57	57	57	57	57	57	57	57	52	47	44	40	38
	80	53	53	53	53	53	53	53	53	52	47	44	40	38
	90	51	51	51	51	51	51	51	51	51	47	44	40	38

Notes:

1. Tables are based on critical rail span for load combinations as specified in chapter 2 of the ASCE 7-16 and allowable design loads per the 2015 Aluminum Design Manual.
2. Panels are assumed to be in portrait orientation with a maximum length of 67.5"

Max Rail Spans for SunModo SMR200 Rail System

Table 33a

Mean Roof Height: 15 < h ≤ 30 ft
Roof Angle: 20 < θ ≤ 27 degrees
Exposure Category: D
Panel Orientation: Portrait
North/South Support Y_E = 1
Roof Type : Gable

Roof Wind Zone	Ground Snow Load (psf)	Wind Speed (mph)												
		90	95	100	105	110	115	120	130	140	150	160	170	180
Zones 1 & 2e	0	119	119	119	116	111	107	103	95	86	79	74	68	64
	10	116	116	116	116	111	107	103	95	86	79	74	68	64
	20	97	97	97	97	97	97	96	94	86	79	74	68	64
	30	83	83	83	83	83	83	83	83	82	79	74	68	64
	40	73	73	73	73	73	73	73	73	73	73	72	68	64
	50	66	66	66	66	66	66	66	66	66	66	66	66	64
	60	61	61	61	61	61	61	61	61	61	61	61	61	61
	70	57	57	57	57	57	57	57	57	57	57	57	57	57
	80	53	53	53	53	53	53	53	53	53	53	53	53	53
	90	51	51	51	51	51	51	51	51	51	51	51	51	51
Zones 2n, 2r, & 3e	0	114	108	103	99	93	88	83	74	67	61	56	52	48
	10	114	108	103	99	93	88	83	74	67	61	56	52	48
	20	97	97	97	97	93	88	83	74	67	61	56	52	48
	30	83	83	83	83	83	83	83	74	67	61	56	52	48
	40	73	73	73	73	73	73	73	73	67	61	56	52	48
	50	66	66	66	66	66	66	66	66	66	61	56	52	48
	60	61	61	61	61	61	61	61	61	61	61	56	52	48
	70	57	57	57	57	57	57	57	57	57	57	56	52	48
	80	53	53	53	53	53	53	53	53	53	53	53	52	48
	90	51	51	51	51	51	51	51	51	51	51	51	51	48
Zone 3r	0	108	103	98	92	86	80	76	68	61	56	51	47	44
	10	108	103	98	92	86	80	76	68	61	56	51	47	44
	20	97	97	97	92	86	80	76	68	61	56	51	47	44
	30	83	83	83	83	83	80	76	68	61	56	51	47	44
	40	73	73	73	73	73	73	73	68	61	56	51	47	44
	50	66	66	66	66	66	66	66	66	61	56	51	47	44
	60	61	61	61	61	61	61	61	61	61	56	51	47	44
	70	57	57	57	57	57	57	57	57	57	56	51	47	44
	80	53	53	53	53	53	53	53	53	53	53	51	47	44
	90	51	51	51	51	51	51	51	51	51	51	51	47	44

Notes:

1. Tables are based on critical rail span for load combinations as specified in chapter 2 of the ASCE 7-16 and allowable design loads per the 2015 Aluminum Design Manual.
2. Panels are assumed to be in portrait orientation with a maximum length of 67.5"

Max Rail Spans for SunModo SMR200 Rail System

Table 33b

Mean Roof Height: 15 < h ≤ 30 ft
Roof Angle: 20 < θ ≤ 27 degrees
Exposure Category: D
Panel Orientation: Portrait
North/South Support γ_E = 1.5
Roof Type : Gable

Roof Wind Zone	Ground Snow Load (psf)	Wind Speed (mph)												
		90	95	100	105	110	115	120	130	140	150	160	170	180
Zones 1 & 2e	0	111	106	101	97	91	86	81	74	68	63	58	54	51
	10	111	106	101	97	91	86	81	74	68	63	58	54	51
	20	97	97	97	97	91	86	81	74	68	63	58	54	51
	30	83	83	83	83	83	83	81	74	68	63	58	54	51
	40	73	73	73	73	73	73	73	73	68	63	58	54	51
	50	66	66	66	66	66	66	66	66	66	63	58	54	51
	60	61	61	61	61	61	61	61	61	61	61	58	54	51
	70	57	57	57	57	57	57	57	57	57	57	57	54	51
	80	53	53	53	53	53	53	53	53	53	53	53	53	51
	90	51	51	51	51	51	51	51	51	51	51	51	51	51
Zones 2n, 2r, & 3e	0	93	86	81	75	71	67	63	57	52	47	43	41	38
	10	93	86	81	75	71	67	63	57	52	47	43	41	38
	20	93	86	81	75	71	67	63	57	52	47	43	41	38
	30	83	83	81	75	71	67	63	57	52	47	43	41	38
	40	73	73	73	73	71	67	63	57	52	47	43	41	38
	50	66	66	66	66	66	66	63	57	52	47	43	41	38
	60	61	61	61	61	61	61	61	57	52	47	43	41	38
	70	57	57	57	57	57	57	57	57	52	47	43	41	38
	80	53	53	53	53	53	53	53	53	52	47	43	41	38
	90	51	51	51	51	51	51	51	51	51	47	43	41	38
Zone 3r	0	86	79	74	69	64	61	57	51	46	42	39	37	34
	10	86	79	74	69	64	61	57	51	46	42	39	37	34
	20	86	79	74	69	64	61	57	51	46	42	39	37	34
	30	83	79	74	69	64	61	57	51	46	42	39	37	34
	40	73	73	73	69	64	61	57	51	46	42	39	37	34
	50	66	66	66	66	64	61	57	51	46	42	39	37	34
	60	61	61	61	61	61	61	57	51	46	42	39	37	34
	70	57	57	57	57	57	57	57	51	46	42	39	37	34
	80	53	53	53	53	53	53	53	51	46	42	39	37	34
	90	51	51	51	51	51	51	51	51	46	42	39	37	34

Notes:

1. Tables are based on critical rail span for load combinations as specified in chapter 2 of the ASCE 7-16 and allowable design loads per the 2015 Aluminum Design Manual.
2. Panels are assumed to be in portrait orientation with a maximum length of 67.5"

Structural ENGINUITY INC
Ingenuity in Engineering

SUNMODO®

Max Rail Spans for SunModo SMR200 Rail System

Table 34a

Mean Roof Height: 15 < h ≤ 30 ft
Roof Angle: 27 < θ ≤ 45 degrees
Exposure Category: B
Panel Orientation: Portrait
North/South Support γ_E = 1
Roof Type : Gable

Roof Wind Zone	Ground Snow Load (psf)	Wind Speed (mph)												
		90	95	100	105	110	115	120	130	140	150	160	170	180
Zones 1, 2e, & 2r	0	119	119	119	119	119	119	119	119	113	106	99	91	84
	10	117	117	117	117	117	117	115	113	110	106	99	91	84
	20	101	101	101	101	100	99	99	97	95	93	90	88	84
	30	87	87	87	87	87	87	87	86	85	83	81	80	78
	40	77	77	77	77	77	77	77	77	77	76	75	73	72
	50	70	70	70	70	70	70	70	70	70	70	70	68	67
	60	65	65	65	65	65	65	65	65	65	65	65	64	63
	70	60	60	60	60	60	60	60	60	60	60	60	60	60
	80	57	57	57	57	57	57	57	57	57	57	57	57	57
	90	54	54	54	54	54	54	54	54	54	54	54	54	54
Zones 2n & 3r	0	119	119	119	119	119	119	119	111	104	96	88	82	76
	10	117	117	117	117	117	117	115	111	104	96	88	82	76
	20	101	101	101	101	100	99	99	97	95	93	88	82	76
	30	87	87	87	87	87	87	87	86	85	83	81	80	76
	40	77	77	77	77	77	77	77	77	77	76	75	73	72
	50	70	70	70	70	70	70	70	70	70	70	70	68	67
	60	65	65	65	65	65	65	65	65	65	65	65	64	63
	70	60	60	60	60	60	60	60	60	60	60	60	60	60
	80	57	57	57	57	57	57	57	57	57	57	57	57	57
	90	54	54	54	54	54	54	54	54	54	54	54	54	54
Zone 3e	0	119	119	119	119	117	112	108	100	91	84	77	71	66
	10	117	117	117	117	117	112	108	100	91	84	77	71	66
	20	101	101	101	101	100	99	99	97	91	84	77	71	66
	30	87	87	87	87	87	87	87	86	85	83	77	71	66
	40	77	77	77	77	77	77	77	77	77	76	75	71	66
	50	70	70	70	70	70	70	70	70	70	70	70	68	66
	60	65	65	65	65	65	65	65	65	65	65	65	64	63
	70	60	60	60	60	60	60	60	60	60	60	60	60	60
	80	57	57	57	57	57	57	57	57	57	57	57	57	57
	90	54	54	54	54	54	54	54	54	54	54	54	54	54

Notes:

1. Tables are based on critical rail span for load combinations as specified in chapter 2 of the ASCE 7-16 and allowable design loads per the 2015 Aluminum Design Manual.
2. Panels are assumed to be in portrait orientation with a maximum length of 67.5"

Max Rail Spans for SunModo SMR200 Rail System

Table 34b

Mean Roof Height: 15 < h ≤ 30 ft
Roof Angle: 27 < θ ≤ 45 degrees
Exposure Category: B
Panel Orientation: Portrait
North/South Support γ_E = 1.5
Roof Type : Gable

Roof Wind Zone	Ground Snow Load (psf)	Wind Speed (mph)												
		90	95	100	105	110	115	120	130	140	150	160	170	180
Zones 1, 2e, & 2r	0	119	119	119	119	117	112	108	100	90	82	75	69	64
	10	117	117	117	117	117	112	108	100	90	82	75	69	64
	20	101	101	101	101	100	99	99	97	90	82	75	69	64
	30	87	87	87	87	87	87	87	86	85	82	75	69	64
	40	77	77	77	77	77	77	77	77	77	76	75	69	64
	50	70	70	70	70	70	70	70	70	70	70	70	68	64
	60	65	65	65	65	65	65	65	65	65	65	65	64	63
	70	60	60	60	60	60	60	60	60	60	60	60	60	60
	80	57	57	57	57	57	57	57	57	57	57	57	57	57
	90	54	54	54	54	54	54	54	54	54	54	54	54	54
Zones 2n & 3r	0	119	119	117	112	107	103	98	89	81	74	68	63	59
	10	117	117	117	112	107	103	98	89	81	74	68	63	59
	20	101	101	101	101	100	99	98	89	81	74	68	63	59
	30	87	87	87	87	87	87	87	86	81	74	68	63	59
	40	77	77	77	77	77	77	77	77	77	74	68	63	59
	50	70	70	70	70	70	70	70	70	70	70	68	63	59
	60	65	65	65	65	65	65	65	65	65	65	65	63	59
	70	60	60	60	60	60	60	60	60	60	60	60	60	59
	80	57	57	57	57	57	57	57	57	57	57	57	57	57
	90	54	54	54	54	54	54	54	54	54	54	54	54	54
Zone 3e	0	117	111	106	102	96	91	86	77	70	64	59	55	51
	10	117	111	106	102	96	91	86	77	70	64	59	55	51
	20	101	101	101	101	96	91	86	77	70	64	59	55	51
	30	87	87	87	87	87	87	86	77	70	64	59	55	51
	40	77	77	77	77	77	77	77	77	70	64	59	55	51
	50	70	70	70	70	70	70	70	70	70	64	59	55	51
	60	65	65	65	65	65	65	65	65	65	64	59	55	51
	70	60	60	60	60	60	60	60	60	60	60	59	55	51
	80	57	57	57	57	57	57	57	57	57	57	57	55	51
	90	54	54	54	54	54	54	54	54	54	54	54	54	51

Notes:

1. Tables are based on critical rail span for load combinations as specified in chapter 2 of the ASCE 7-16 and allowable design loads per the 2015 Aluminum Design Manual.
2. Panels are assumed to be in portrait orientation with a maximum length of 67.5"

Max Rail Spans for SunModo SMR200 Rail System

Table 35a

Mean Roof Height: 15 < h ≤ 30 ft
Roof Angle: 27 < θ ≤ 45 degrees
Exposure Category: C
Panel Orientation: Portrait
North/South Support Y_E = 1
Roof Type : Gable

Roof Wind Zone	Ground Snow Load (psf)	Wind Speed (mph)												
		90	95	100	105	110	115	120	130	140	150	160	170	180
Zones 1, 2e, & 2r	0	119	119	119	119	119	116	112	103	94	86	79	72	67
	10	117	117	116	114	112	111	109	103	94	86	79	72	67
	20	101	100	99	98	97	95	94	92	89	86	79	72	67
	30	87	87	87	87	86	85	84	82	81	79	77	72	67
	40	77	77	77	77	77	77	77	76	74	73	71	69	67
	50	70	70	70	70	70	70	70	70	69	68	66	65	64
	60	65	65	65	65	65	65	65	65	65	64	63	61	60
	70	60	60	60	60	60	60	60	60	60	60	59	58	57
	80	57	57	57	57	57	57	57	57	57	57	57	56	55
	90	54	54	54	54	54	54	54	54	54	54	54	53	53
Zones 2n & 3r	0	119	119	119	115	111	106	102	93	84	77	71	66	61
	10	117	117	116	114	111	106	102	93	84	77	71	66	61
	20	101	100	99	98	97	95	94	92	84	77	71	66	61
	30	87	87	87	87	86	85	84	82	81	77	71	66	61
	40	77	77	77	77	77	77	77	76	74	73	71	66	61
	50	70	70	70	70	70	70	70	70	69	68	66	65	61
	60	65	65	65	65	65	65	65	65	65	64	63	61	60
	70	60	60	60	60	60	60	60	60	60	60	59	58	57
	80	57	57	57	57	57	57	57	57	57	57	57	56	55
	90	54	54	54	54	54	54	54	54	54	54	54	53	53
Zone 3e	0	119	115	110	105	100	95	90	81	74	67	62	57	53
	10	117	115	110	105	100	95	90	81	74	67	62	57	53
	20	101	100	99	98	97	95	90	81	74	67	62	57	53
	30	87	87	87	87	86	85	84	81	74	67	62	57	53
	40	77	77	77	77	77	77	77	76	74	67	62	57	53
	50	70	70	70	70	70	70	70	70	69	67	62	57	53
	60	65	65	65	65	65	65	65	65	65	64	62	57	53
	70	60	60	60	60	60	60	60	60	60	60	59	57	53
	80	57	57	57	57	57	57	57	57	57	57	57	56	53
	90	54	54	54	54	54	54	54	54	54	54	54	53	53

Notes:

1. Tables are based on critical rail span for load combinations as specified in chapter 2 of the ASCE 7-16 and allowable design loads per the 2015 Aluminum Design Manual.
2. Panels are assumed to be in portrait orientation with a maximum length of 67.5"

Structural ENGINUITY INC
Ingenuity in Engineering

SUNMODO®

Max Rail Spans for SunModo SMR200 Rail System

Table 35b

Mean Roof Height: 15 < h ≤ 30 ft
Roof Angle: 27 < θ ≤ 45 degrees
Exposure Category: C
Panel Orientation: Portrait
North/South Support γ_E = 1.5
Roof Type : Gable

Roof Wind Zone	Ground Snow Load (psf)	Wind Speed (mph)												
		90	95	100	105	110	115	120	130	140	150	160	170	180
Zones 1, 2e, & 2r	0	119	115	109	104	100	94	88	79	72	65	60	55	51
	10	117	115	109	104	100	94	88	79	72	65	60	55	51
	20	101	100	99	98	97	94	88	79	72	65	60	55	51
	30	87	87	87	87	86	85	84	79	72	65	60	55	51
	40	77	77	77	77	77	77	77	76	72	65	60	55	51
	50	70	70	70	70	70	70	70	70	69	65	60	55	51
	60	65	65	65	65	65	65	65	65	65	64	60	55	51
	70	60	60	60	60	60	60	60	60	60	60	59	55	51
	80	57	57	57	57	57	57	57	57	57	57	57	55	51
	90	54	54	54	54	54	54	54	54	54	54	54	53	51
Zones 2n & 3r	0	110	105	100	94	89	84	79	72	65	60	55	51	48
	10	110	105	100	94	89	84	79	72	65	60	55	51	48
	20	101	100	99	94	89	84	79	72	65	60	55	51	48
	30	87	87	87	87	86	84	79	72	65	60	55	51	48
	40	77	77	77	77	77	77	77	72	65	60	55	51	48
	50	70	70	70	70	70	70	70	70	65	60	55	51	48
	60	65	65	65	65	65	65	65	65	65	60	55	51	48
	70	60	60	60	60	60	60	60	60	60	60	55	51	48
	80	57	57	57	57	57	57	57	57	57	57	55	51	48
	90	54	54	54	54	54	54	54	54	54	54	54	51	48
Zone 3e	0	100	93	87	82	77	73	69	62	57	52	48	44	41
	10	100	93	87	82	77	73	69	62	57	52	48	44	41
	20	100	93	87	82	77	73	69	62	57	52	48	44	41
	30	87	87	87	82	77	73	69	62	57	52	48	44	41
	40	77	77	77	77	77	73	69	62	57	52	48	44	41
	50	70	70	70	70	70	70	69	62	57	52	48	44	41
	60	65	65	65	65	65	65	65	62	57	52	48	44	41
	70	60	60	60	60	60	60	60	60	57	52	48	44	41
	80	57	57	57	57	57	57	57	57	57	52	48	44	41
	90	54	54	54	54	54	54	54	54	54	52	48	44	41

Notes:

1. Tables are based on critical rail span for load combinations as specified in chapter 2 of the ASCE 7-16 and allowable design loads per the 2015 Aluminum Design Manual.
2. Panels are assumed to be in portrait orientation with a maximum length of 67.5"

Structural ENGINUITY INC
Ingenuity in Engineering

SUNMODO®

Max Rail Spans for SunModo SMR200 Rail System

Table 36a

Mean Roof Height: 15 < h ≤ 30 ft
Roof Angle: 27 < θ ≤ 45 degrees
Exposure Category: D
Panel Orientation: Portrait
North/South Support Y_E = 1
Roof Type : Gable

Roof Wind Zone	Ground Snow Load (psf)	Wind Speed (mph)												
		90	95	100	105	110	115	120	130	140	150	160	170	180
Zones 1, 2e, & 2r	0	119	119	119	117	112	107	103	93	84	77	70	65	60
	10	117	115	113	111	109	107	103	93	84	77	70	65	60
	20	99	98	97	96	94	93	92	89	84	77	70	65	60
	30	87	87	86	85	84	83	82	80	78	76	70	65	60
	40	77	77	77	77	77	76	75	74	72	70	69	65	60
	50	70	70	70	70	70	70	70	69	67	66	64	63	60
	60	65	65	65	65	65	65	65	65	63	62	61	60	58
	70	60	60	60	60	60	60	60	60	60	59	58	57	56
	80	57	57	57	57	57	57	57	57	57	56	55	54	53
	90	54	54	54	54	54	54	54	54	54	54	53	52	51
Zones 2n & 3r	0	119	117	112	107	103	97	92	83	76	69	64	59	55
	10	117	115	112	107	103	97	92	83	76	69	64	59	55
	20	99	98	97	96	94	93	92	83	76	69	64	59	55
	30	87	87	86	85	84	83	82	80	76	69	64	59	55
	40	77	77	77	77	77	76	75	74	72	69	64	59	55
	50	70	70	70	70	70	70	70	69	67	66	64	59	55
	60	65	65	65	65	65	65	65	65	63	62	61	59	55
	70	60	60	60	60	60	60	60	60	60	59	58	57	55
	80	57	57	57	57	57	57	57	57	57	56	55	54	53
	90	54	54	54	54	54	54	54	54	54	54	53	52	51
Zone 3e	0	112	106	102	96	90	85	80	73	66	60	56	52	48
	10	112	106	102	96	90	85	80	73	66	60	56	52	48
	20	99	98	97	96	90	85	80	73	66	60	56	52	48
	30	87	87	86	85	84	83	80	73	66	60	56	52	48
	40	77	77	77	77	77	76	75	73	66	60	56	52	48
	50	70	70	70	70	70	70	70	69	66	60	56	52	48
	60	65	65	65	65	65	65	65	65	63	60	56	52	48
	70	60	60	60	60	60	60	60	60	60	59	56	52	48
	80	57	57	57	57	57	57	57	57	57	56	55	52	48
	90	54	54	54	54	54	54	54	54	54	54	53	52	48

Notes:

1. Tables are based on critical rail span for load combinations as specified in chapter 2 of the ASCE 7-16 and allowable design loads per the 2015 Aluminum Design Manual.
2. Panels are assumed to be in portrait orientation with a maximum length of 67.5"

Max Rail Spans for SunModo SMR200 Rail System

Table 36b

Mean Roof Height: 15 < h ≤ 30 ft
Roof Angle: 27 < θ ≤ 45 degrees
Exposure Category: D
Panel Orientation: Portrait
North/South Support γ_E = 1.5
Roof Type : Gable

Roof Wind Zone	Ground Snow Load (psf)	Wind Speed (mph)												
		90	95	100	105	110	115	120	130	140	150	160	170	180
Zones 1, 2e, & 2r	0	112	106	101	94	89	83	79	71	64	58	54	49	46
	10	112	106	101	94	89	83	79	71	64	58	54	49	46
	20	99	98	97	94	89	83	79	71	64	58	54	49	46
	30	87	87	86	85	84	83	79	71	64	58	54	49	46
	40	77	77	77	77	77	76	75	71	64	58	54	49	46
	50	70	70	70	70	70	70	70	69	64	58	54	49	46
	60	65	65	65	65	65	65	65	65	63	58	54	49	46
	70	60	60	60	60	60	60	60	60	60	58	54	49	46
	80	57	57	57	57	57	57	57	57	57	56	54	49	46
	90	54	54	54	54	54	54	54	54	54	54	53	49	46
Zones 2n & 3r	0	102	96	90	84	80	75	71	64	59	54	50	46	43
	10	102	96	90	84	80	75	71	64	59	54	50	46	43
	20	99	96	90	84	80	75	71	64	59	54	50	46	43
	30	87	87	86	84	80	75	71	64	59	54	50	46	43
	40	77	77	77	77	77	75	71	64	59	54	50	46	43
	50	70	70	70	70	70	70	70	64	59	54	50	46	43
	60	65	65	65	65	65	65	65	64	59	54	50	46	43
	70	60	60	60	60	60	60	60	60	59	54	50	46	43
	80	57	57	57	57	57	57	57	57	57	54	50	46	43
	90	54	54	54	54	54	54	54	54	54	54	50	46	43
Zone 3e	0	90	84	78	74	69	66	62	56	51	47	43	40	38
	10	90	84	78	74	69	66	62	56	51	47	43	40	38
	20	90	84	78	74	69	66	62	56	51	47	43	40	38
	30	87	84	78	74	69	66	62	56	51	47	43	40	38
	40	77	77	77	74	69	66	62	56	51	47	43	40	38
	50	70	70	70	70	69	66	62	56	51	47	43	40	38
	60	65	65	65	65	65	65	62	56	51	47	43	40	38
	70	60	60	60	60	60	60	60	56	51	47	43	40	38
	80	57	57	57	57	57	57	57	56	51	47	43	40	38
	90	54	54	54	54	54	54	54	54	51	47	43	40	38

Notes:

1. Tables are based on critical rail span for load combinations as specified in chapter 2 of the ASCE 7-16 and allowable design loads per the 2015 Aluminum Design Manual.
2. Panels are assumed to be in portrait orientation with a maximum length of 67.5"

Max Rail Spans for SunModo SMR200 Rail System

Table 37a

Mean Roof Height: 15 < h ≤ 30 ft
Roof Angle: 7 < θ ≤ 20 degrees
Exposure Category: B
Panel Orientation: Portrait
North/South Support γ_E = 1
Roof Type : Hip h/B = ≥ 0.8

Roof Wind Zone	Ground Snow Load (psf)	Wind Speed (mph)												
		90	95	100	105	110	115	120	130	140	150	160	170	180
Zone 1	0	119	119	119	119	119	119	119	113	105	98	91	83	78
	10	107	107	107	107	107	107	107	106	104	98	91	83	78
	20	82	82	82	82	82	82	82	82	82	82	82	80	78
	30	82	82	82	82	82	82	82	82	82	82	82	80	78
	40	73	73	73	73	73	73	73	73	73	73	73	73	72
	50	66	66	66	66	66	66	66	66	66	66	66	66	66
	60	60	60	60	60	60	60	60	60	60	60	60	60	60
	70	56	56	56	56	56	56	56	56	56	56	56	56	56
	80	53	53	53	53	53	53	53	53	53	53	53	53	53
	90	50	50	50	50	50	50	50	50	50	50	50	50	50
Zone 2r	0	119	119	119	119	119	115	110	103	96	88	80	74	69
	10	107	107	107	107	107	107	107	103	96	88	80	74	69
	20	82	82	82	82	82	82	82	82	82	82	80	74	69
	30	82	82	82	82	82	82	82	82	82	82	80	74	69
	40	73	73	73	73	73	73	73	73	73	73	73	73	69
	50	66	66	66	66	66	66	66	66	66	66	66	66	66
	60	60	60	60	60	60	60	60	60	60	60	60	60	60
	70	56	56	56	56	56	56	56	56	56	56	56	56	56
	80	53	53	53	53	53	53	53	53	53	53	53	53	53
	90	50	50	50	50	50	50	50	50	50	50	50	50	50
Zones 2e & 3	0	119	119	119	119	115	111	106	99	91	83	76	70	65
	10	107	107	107	107	107	107	106	99	91	83	76	70	65
	20	82	82	82	82	82	82	82	82	82	82	76	70	65
	30	82	82	82	82	82	82	82	82	82	82	76	70	65
	40	73	73	73	73	73	73	73	73	73	73	73	70	65
	50	66	66	66	66	66	66	66	66	66	66	66	66	65
	60	60	60	60	60	60	60	60	60	60	60	60	60	60
	70	56	56	56	56	56	56	56	56	56	56	56	56	56
	80	53	53	53	53	53	53	53	53	53	53	53	53	53
	90	50	50	50	50	50	50	50	50	50	50	50	50	50

Notes:

1. Tables are based on critical rail span for load combinations as specified in chapter 2 of the ASCE 7-16 and allowable design loads per the 2015 Aluminum Design Manual.
2. Panels are assumed to be in portrait orientation with a maximum length of 67.5"

Max Rail Spans for SunModo SMR200 Rail System

Table 37b

Mean Roof Height: 15 < h ≤ 30 ft
Roof Angle: 7 < θ ≤ 20 degrees
Exposure Category: B
Panel Orientation: Portrait
North/South Support γ_E = 1.5
Roof Type : Hip h/B = ≥ 0.8

Roof Wind Zone	Ground Snow Load (psf)	Wind Speed (mph)												
		90	95	100	105	110	115	120	130	140	150	160	170	180
Zone 1	0	119	119	119	114	109	104	100	92	83	76	70	66	61
	10	107	107	107	107	107	104	100	92	83	76	70	66	61
	20	82	82	82	82	82	82	82	82	82	76	70	66	61
	30	82	82	82	82	82	82	82	82	82	76	70	66	61
	40	73	73	73	73	73	73	73	73	73	73	70	66	61
	50	66	66	66	66	66	66	66	66	66	66	66	66	61
	60	60	60	60	60	60	60	60	60	60	60	60	60	60
	70	56	56	56	56	56	56	56	56	56	56	56	56	56
	80	53	53	53	53	53	53	53	53	53	53	53	53	53
	90	50	50	50	50	50	50	50	50	50	50	50	50	50
Zone 2r	0	119	114	108	104	99	96	90	81	73	67	62	57	53
	10	107	107	107	104	99	96	90	81	73	67	62	57	53
	20	82	82	82	82	82	82	82	81	73	67	62	57	53
	30	82	82	82	82	82	82	82	81	73	67	62	57	53
	40	73	73	73	73	73	73	73	73	73	67	62	57	53
	50	66	66	66	66	66	66	66	66	66	66	62	57	53
	60	60	60	60	60	60	60	60	60	60	60	60	57	53
	70	56	56	56	56	56	56	56	56	56	56	56	56	53
	80	53	53	53	53	53	53	53	53	53	53	53	53	53
	90	50	50	50	50	50	50	50	50	50	50	50	50	50
Zones 2e & 3	0	115	110	104	100	96	90	85	77	70	64	58	54	50
	10	107	107	104	100	96	90	85	77	70	64	58	54	50
	20	82	82	82	82	82	82	82	77	70	64	58	54	50
	30	82	82	82	82	82	82	82	77	70	64	58	54	50
	40	73	73	73	73	73	73	73	73	70	64	58	54	50
	50	66	66	66	66	66	66	66	66	66	64	58	54	50
	60	60	60	60	60	60	60	60	60	60	60	58	54	50
	70	56	56	56	56	56	56	56	56	56	56	56	54	50
	80	53	53	53	53	53	53	53	53	53	53	53	53	50
	90	50	50	50	50	50	50	50	50	50	50	50	50	50

Notes:

1. Tables are based on critical rail span for load combinations as specified in chapter 2 of the ASCE 7-16 and allowable design loads per the 2015 Aluminum Design Manual.
2. Panels are assumed to be in portrait orientation with a maximum length of 67.5"

Structural ENGINUITY INC
Ingenuity in Engineering

SUNMODO®

Max Rail Spans for SunModo SMR200 Rail System

Table 38a

Mean Roof Height: 15 < h ≤ 30 ft
Roof Angle: 7 < θ ≤ 20 degrees
Exposure Category: C
Panel Orientation: Portrait
North/South Support Y_E = 1
Roof Type : Hip h/B = ≥ 0.8

Roof Wind Zone	Ground Snow Load (psf)	Wind Speed (mph)												
		90	95	100	105	110	115	120	130	140	150	160	170	180
Zone 1	0	119	119	119	118	113	108	104	96	86	79	73	68	64
	10	107	107	107	107	106	105	103	96	86	79	73	68	64
	20	82	82	82	82	82	82	82	82	81	79	73	68	64
	30	82	82	82	82	82	82	82	82	81	79	73	68	64
	40	73	73	73	73	73	73	73	73	73	72	71	68	64
	50	66	66	66	66	66	66	66	66	66	66	66	65	64
	60	60	60	60	60	60	60	60	60	60	60	60	60	60
	70	56	56	56	56	56	56	56	56	56	56	56	56	56
	80	53	53	53	53	53	53	53	53	53	53	53	53	53
	90	50	50	50	50	50	50	50	50	50	50	50	50	50
Zone 2r	0	119	117	112	107	102	98	94	85	77	70	64	60	55
	10	107	107	107	107	102	98	94	85	77	70	64	60	55
	20	82	82	82	82	82	82	82	82	77	70	64	60	55
	30	82	82	82	82	82	82	82	82	77	70	64	60	55
	40	73	73	73	73	73	73	73	73	73	70	64	60	55
	50	66	66	66	66	66	66	66	66	66	66	64	60	55
	60	60	60	60	60	60	60	60	60	60	60	60	60	55
	70	56	56	56	56	56	56	56	56	56	56	56	56	55
	80	53	53	53	53	53	53	53	53	53	53	53	53	53
	90	50	50	50	50	50	50	50	50	50	50	50	50	50
Zones 2e & 3	0	119	113	108	103	99	95	89	80	73	66	61	57	53
	10	107	107	107	103	99	95	89	80	73	66	61	57	53
	20	82	82	82	82	82	82	82	80	73	66	61	57	53
	30	82	82	82	82	82	82	82	80	73	66	61	57	53
	40	73	73	73	73	73	73	73	73	73	66	61	57	53
	50	66	66	66	66	66	66	66	66	66	66	61	57	53
	60	60	60	60	60	60	60	60	60	60	60	60	57	53
	70	56	56	56	56	56	56	56	56	56	56	56	56	53
	80	53	53	53	53	53	53	53	53	53	53	53	53	53
	90	50	50	50	50	50	50	50	50	50	50	50	50	50

Notes:

1. Tables are based on critical rail span for load combinations as specified in chapter 2 of the ASCE 7-16 and allowable design loads per the 2015 Aluminum Design Manual.
2. Panels are assumed to be in portrait orientation with a maximum length of 67.5"

Max Rail Spans for SunModo SMR200 Rail System

Table 38b

Mean Roof Height: 15 < h ≤ 30 ft
Roof Angle: 7 < θ ≤ 20 degrees
Exposure Category: C
Panel Orientation: Portrait
North/South Support γ_E = 1.5
Roof Type : Hip h/B = ≥ 0.8

Roof Wind Zone	Ground Snow Load (psf)	Wind Speed (mph)												
		90	95	100	105	110	115	120	130	140	150	160	170	180
Zone 1	0	113	107	102	97	91	86	81	74	68	62	58	54	50
	10	107	107	102	97	91	86	81	74	68	62	58	54	50
	20	82	82	82	82	82	82	81	74	68	62	58	54	50
	30	82	82	82	82	82	82	81	74	68	62	58	54	50
	40	73	73	73	73	73	73	73	73	68	62	58	54	50
	50	66	66	66	66	66	66	66	66	66	62	58	54	50
	60	60	60	60	60	60	60	60	60	60	60	58	54	50
	70	56	56	56	56	56	56	56	56	56	56	56	54	50
	80	53	53	53	53	53	53	53	53	53	53	53	53	50
	90	50	50	50	50	50	50	50	50	50	50	50	50	50
Zone 2r	0	102	97	92	86	81	76	72	65	59	54	50	46	43
	10	102	97	92	86	81	76	72	65	59	54	50	46	43
	20	82	82	82	82	81	76	72	65	59	54	50	46	43
	30	82	82	82	82	81	76	72	65	59	54	50	46	43
	40	73	73	73	73	73	73	72	65	59	54	50	46	43
	50	66	66	66	66	66	66	66	65	59	54	50	46	43
	60	60	60	60	60	60	60	60	60	59	54	50	46	43
	70	56	56	56	56	56	56	56	56	56	54	50	46	43
	80	53	53	53	53	53	53	53	53	53	53	50	46	43
	90	50	50	50	50	50	50	50	50	50	50	50	46	43
Zones 2e & 3	0	99	93	87	81	77	72	68	62	56	51	47	44	41
	10	99	93	87	81	77	72	68	62	56	51	47	44	41
	20	82	82	82	81	77	72	68	62	56	51	47	44	41
	30	82	82	82	81	77	72	68	62	56	51	47	44	41
	40	73	73	73	73	73	72	68	62	56	51	47	44	41
	50	66	66	66	66	66	66	66	62	56	51	47	44	41
	60	60	60	60	60	60	60	60	60	56	51	47	44	41
	70	56	56	56	56	56	56	56	56	56	51	47	44	41
	80	53	53	53	53	53	53	53	53	53	51	47	44	41
	90	50	50	50	50	50	50	50	50	50	50	47	44	41

Notes:

1. Tables are based on critical rail span for load combinations as specified in chapter 2 of the ASCE 7-16 and allowable design loads per the 2015 Aluminum Design Manual.
2. Panels are assumed to be in portrait orientation with a maximum length of 67.5"

Structural ENGINUITY INC
Ingenuity in Engineering

SUNMODO®

Max Rail Spans for SunModo SMR200 Rail System

Table 39a

Mean Roof Height: 15 < h ≤ 30 ft
Roof Angle: 7 < θ ≤ 20 degrees
Exposure Category: D
Panel Orientation: Portrait
North/South Support Y_E = 1
Roof Type : Hip h/B = ≥ 0.8

Roof Wind Zone	Ground Snow Load (psf)	Wind Speed (mph)												
		90	95	100	105	110	115	120	130	140	150	160	170	180
Zone 1	0	119	119	114	109	104	100	96	85	78	72	66	62	58
	10	107	107	106	105	104	100	96	85	78	72	66	62	58
	20	82	82	82	82	82	82	82	81	78	72	66	62	58
	30	82	82	82	82	82	82	82	81	78	72	66	62	58
	40	73	73	73	73	73	73	73	73	72	71	66	62	58
	50	66	66	66	66	66	66	66	66	66	65	64	62	58
	60	60	60	60	60	60	60	60	60	60	60	60	59	58
	70	56	56	56	56	56	56	56	56	56	56	56	56	55
	80	53	53	53	53	53	53	53	53	53	53	53	53	53
	90	50	50	50	50	50	50	50	50	50	50	50	50	50
Zone 2r	0	114	108	103	99	95	89	84	76	69	63	58	53	50
	10	107	107	103	99	95	89	84	76	69	63	58	53	50
	20	82	82	82	82	82	82	82	76	69	63	58	53	50
	30	82	82	82	82	82	82	82	76	69	63	58	53	50
	40	73	73	73	73	73	73	73	73	69	63	58	53	50
	50	66	66	66	66	66	66	66	66	66	63	58	53	50
	60	60	60	60	60	60	60	60	60	60	60	58	53	50
	70	56	56	56	56	56	56	56	56	56	56	56	53	50
	80	53	53	53	53	53	53	53	53	53	53	53	53	50
	90	50	50	50	50	50	50	50	50	50	50	50	50	50
Zones 2e & 3	0	110	105	100	96	90	85	80	72	65	60	55	51	47
	10	107	105	100	96	90	85	80	72	65	60	55	51	47
	20	82	82	82	82	82	82	80	72	65	60	55	51	47
	30	82	82	82	82	82	82	80	72	65	60	55	51	47
	40	73	73	73	73	73	73	73	72	65	60	55	51	47
	50	66	66	66	66	66	66	66	66	65	60	55	51	47
	60	60	60	60	60	60	60	60	60	60	60	55	51	47
	70	56	56	56	56	56	56	56	56	56	56	55	51	47
	80	53	53	53	53	53	53	53	53	53	53	53	51	47
	90	50	50	50	50	50	50	50	50	50	50	50	50	47

Notes:

1. Tables are based on critical rail span for load combinations as specified in chapter 2 of the ASCE 7-16 and allowable design loads per the 2015 Aluminum Design Manual.
2. Panels are assumed to be in portrait orientation with a maximum length of 67.5"

Max Rail Spans for SunModo SMR200 Rail System

Table 39b

Mean Roof Height: 15 < h ≤ 30 ft
Roof Angle: 7 < θ ≤ 20 degrees
Exposure Category: D
Panel Orientation: Portrait
North/South Support γ_E = 1.5
Roof Type : Hip h/B = ≥ 0.8

Roof Wind Zone	Ground Snow Load (psf)	Wind Speed (mph)												
		90	95	100	105	110	115	120	130	140	150	160	170	180
Zone 1	0	104	98	93	86	81	77	73	67	61	56	52	49	46
	10	104	98	93	86	81	77	73	67	61	56	52	49	46
	20	82	82	82	82	81	77	73	67	61	56	52	49	46
	30	82	82	82	82	81	77	73	67	61	56	52	49	46
	40	73	73	73	73	73	73	73	67	61	56	52	49	46
	50	66	66	66	66	66	66	66	66	61	56	52	49	46
	60	60	60	60	60	60	60	60	60	60	56	52	49	46
	70	56	56	56	56	56	56	56	56	56	56	52	49	46
	80	53	53	53	53	53	53	53	53	53	53	52	49	46
	90	50	50	50	50	50	50	50	50	50	50	50	49	46
Zone 2r	0	95	88	82	77	72	68	64	58	53	48	45	41	39
	10	95	88	82	77	72	68	64	58	53	48	45	41	39
	20	82	82	82	77	72	68	64	58	53	48	45	41	39
	30	82	82	82	77	72	68	64	58	53	48	45	41	39
	40	73	73	73	73	72	68	64	58	53	48	45	41	39
	50	66	66	66	66	66	66	64	58	53	48	45	41	39
	60	60	60	60	60	60	60	60	58	53	48	45	41	39
	70	56	56	56	56	56	56	56	56	53	48	45	41	39
	80	53	53	53	53	53	53	53	53	53	48	45	41	39
	90	50	50	50	50	50	50	50	50	50	48	45	41	39
Zones 2e & 3	0	90	83	78	73	69	65	61	55	50	46	42	40	38
	10	90	83	78	73	69	65	61	55	50	46	42	40	38
	20	82	82	78	73	69	65	61	55	50	46	42	40	38
	30	82	82	78	73	69	65	61	55	50	46	42	40	38
	40	73	73	73	73	69	65	61	55	50	46	42	40	38
	50	66	66	66	66	66	65	61	55	50	46	42	40	38
	60	60	60	60	60	60	60	60	55	50	46	42	40	38
	70	56	56	56	56	56	56	56	55	50	46	42	40	38
	80	53	53	53	53	53	53	53	53	50	46	42	40	38
	90	50	50	50	50	50	50	50	50	50	46	42	40	38

Notes:

1. Tables are based on critical rail span for load combinations as specified in chapter 2 of the ASCE 7-16 and allowable design loads per the 2015 Aluminum Design Manual.
2. Panels are assumed to be in portrait orientation with a maximum length of 67.5"

Max Rail Spans for SunModo SMR200 Rail System

Table 40a

Mean Roof Height: 15 < h ≤ 30 ft
Roof Angle: 7 < θ ≤ 20 degrees
Exposure Category: B
Panel Orientation: Portrait
North/South Support γ_E = 1
Roof Type : Hip h/B = ≤ 0.5

Roof Wind Zone	Ground Snow Load (psf)	Wind Speed (mph)												
		90	95	100	105	110	115	120	130	140	150	160	170	180
Zone 1	0	119	119	119	119	119	119	119	119	119	113	106	101	96
	10	107	107	107	107	107	107	107	106	104	102	100	98	96
	20	82	82	82	82	82	82	82	82	82	81	80	79	77
	30	82	82	82	82	82	82	82	82	82	81	80	79	77
	40	73	73	73	73	73	73	73	73	73	73	73	72	71
	50	66	66	66	66	66	66	66	66	66	66	66	66	66
	60	60	60	60	60	60	60	60	60	60	60	60	60	60
	70	56	56	56	56	56	56	56	56	56	56	56	56	56
	80	53	53	53	53	53	53	53	53	53	53	53	53	53
	90	50	50	50	50	50	50	50	50	50	50	50	50	50
Zone 2r	0	119	119	119	119	119	115	110	103	96	88	80	74	69
	10	107	107	107	107	107	107	107	103	96	88	80	74	69
	20	82	82	82	82	82	82	82	82	82	81	80	74	69
	30	82	82	82	82	82	82	82	82	82	81	80	74	69
	40	73	73	73	73	73	73	73	73	73	73	73	72	69
	50	66	66	66	66	66	66	66	66	66	66	66	66	66
	60	60	60	60	60	60	60	60	60	60	60	60	60	60
	70	56	56	56	56	56	56	56	56	56	56	56	56	56
	80	53	53	53	53	53	53	53	53	53	53	53	53	53
	90	50	50	50	50	50	50	50	50	50	50	50	50	50
Zones 2e & 3	0	119	119	119	119	119	119	119	116	108	102	96	89	82
	10	107	107	107	107	107	107	107	106	104	102	96	89	82
	20	82	82	82	82	82	82	82	82	82	81	80	79	77
	30	82	82	82	82	82	82	82	82	82	81	80	79	77
	40	73	73	73	73	73	73	73	73	73	73	73	72	71
	50	66	66	66	66	66	66	66	66	66	66	66	66	66
	60	60	60	60	60	60	60	60	60	60	60	60	60	60
	70	56	56	56	56	56	56	56	56	56	56	56	56	56
	80	53	53	53	53	53	53	53	53	53	53	53	53	53
	90	50	50	50	50	50	50	50	50	50	50	50	50	50

Notes:

1. Tables are based on critical rail span for load combinations as specified in chapter 2 of the ASCE 7-16 and allowable design loads per the 2015 Aluminum Design Manual.
2. Panels are assumed to be in portrait orientation with a maximum length of 67.5"

Structural ENGINUITY INC
Ingenuity in Engineering

SUNMODO®

Max Rail Spans for SunModo SMR200 Rail System

Table 40b

Mean Roof Height: 15 < h ≤ 30 ft
Roof Angle: 7 < θ ≤ 20 degrees
Exposure Category: B
Panel Orientation: Portrait
North/South Support γ_E = 1.5
Roof Type : Hip h/B = ≤ 0.5

Roof Wind Zone	Ground Snow Load (psf)	Wind Speed (mph)												
		90	95	100	105	110	115	120	130	140	150	160	170	180
Zone 1	0	119	119	119	119	119	119	115	107	100	93	86	80	74
	10	107	107	107	107	107	107	107	106	100	93	86	80	74
	20	82	82	82	82	82	82	82	82	82	81	80	79	74
	30	82	82	82	82	82	82	82	82	82	81	80	79	74
	40	73	73	73	73	73	73	73	73	73	73	73	72	71
	50	66	66	66	66	66	66	66	66	66	66	66	66	66
	60	60	60	60	60	60	60	60	60	60	60	60	60	60
	70	56	56	56	56	56	56	56	56	56	56	56	56	56
	80	53	53	53	53	53	53	53	53	53	53	53	53	53
	90	50	50	50	50	50	50	50	50	50	50	50	50	50
Zone 2r	0	119	114	108	104	99	96	90	81	73	67	62	57	53
	10	107	107	107	104	99	96	90	81	73	67	62	57	53
	20	82	82	82	82	82	82	82	81	73	67	62	57	53
	30	82	82	82	82	82	82	82	81	73	67	62	57	53
	40	73	73	73	73	73	73	73	73	73	67	62	57	53
	50	66	66	66	66	66	66	66	66	66	66	62	57	53
	60	60	60	60	60	60	60	60	60	60	60	60	57	53
	70	56	56	56	56	56	56	56	56	56	56	56	56	53
	80	53	53	53	53	53	53	53	53	53	53	53	53	53
	90	50	50	50	50	50	50	50	50	50	50	50	50	50
Zones 2e & 3	0	119	119	119	117	112	107	103	96	88	80	74	68	63
	10	107	107	107	107	107	107	103	96	88	80	74	68	63
	20	82	82	82	82	82	82	82	82	82	80	74	68	63
	30	82	82	82	82	82	82	82	82	82	80	74	68	63
	40	73	73	73	73	73	73	73	73	73	73	73	68	63
	50	66	66	66	66	66	66	66	66	66	66	66	66	63
	60	60	60	60	60	60	60	60	60	60	60	60	60	60
	70	56	56	56	56	56	56	56	56	56	56	56	56	56
	80	53	53	53	53	53	53	53	53	53	53	53	53	53
	90	50	50	50	50	50	50	50	50	50	50	50	50	50

Notes:

1. Tables are based on critical rail span for load combinations as specified in chapter 2 of the ASCE 7-16 and allowable design loads per the 2015 Aluminum Design Manual.
2. Panels are assumed to be in portrait orientation with a maximum length of 67.5"

Max Rail Spans for SunModo SMR200 Rail System

Table 41a

Mean Roof Height: 15 < h ≤ 30 ft
Roof Angle: 7 < θ ≤ 20 degrees
Exposure Category: C
Panel Orientation: Portrait
North/South Support Y_E = 1
Roof Type : Hip h/B = ≤ 0.5

Roof Wind Zone	Ground Snow Load (psf)	Wind Speed (mph)												
		90	95	100	105	110	115	120	130	140	150	160	170	180
Zone 1	0	119	119	119	119	119	119	119	110	103	97	90	83	77
	10	107	107	107	107	106	105	103	101	99	96	90	83	77
	20	82	82	82	82	82	82	82	81	79	78	76	74	73
	30	82	82	82	82	82	82	82	81	79	78	76	74	73
	40	73	73	73	73	73	73	73	73	72	71	70	69	67
	50	66	66	66	66	66	66	66	66	66	66	65	64	63
	60	60	60	60	60	60	60	60	60	60	60	60	60	59
	70	56	56	56	56	56	56	56	56	56	56	56	56	56
	80	53	53	53	53	53	53	53	53	53	53	53	53	53
	90	50	50	50	50	50	50	50	50	50	50	50	50	50
Zone 2r	0	119	117	112	107	102	98	94	85	77	70	64	60	55
	10	107	107	107	107	102	98	94	85	77	70	64	60	55
	20	82	82	82	82	82	82	82	81	77	70	64	60	55
	30	82	82	82	82	82	82	82	81	77	70	64	60	55
	40	73	73	73	73	73	73	73	73	72	70	64	60	55
	50	66	66	66	66	66	66	66	66	66	66	64	60	55
	60	60	60	60	60	60	60	60	60	60	60	60	60	55
	70	56	56	56	56	56	56	56	56	56	56	56	56	55
	80	53	53	53	53	53	53	53	53	53	53	53	53	53
	90	50	50	50	50	50	50	50	50	50	50	50	50	50
Zones 2e & 3	0	119	119	119	119	116	111	107	99	92	84	77	71	66
	10	107	107	107	107	106	105	103	99	92	84	77	71	66
	20	82	82	82	82	82	82	82	81	79	78	76	71	66
	30	82	82	82	82	82	82	82	81	79	78	76	71	66
	40	73	73	73	73	73	73	73	73	72	71	70	69	66
	50	66	66	66	66	66	66	66	66	66	66	65	64	63
	60	60	60	60	60	60	60	60	60	60	60	60	60	59
	70	56	56	56	56	56	56	56	56	56	56	56	56	56
	80	53	53	53	53	53	53	53	53	53	53	53	53	53
	90	50	50	50	50	50	50	50	50	50	50	50	50	50

Notes:

1. Tables are based on critical rail span for load combinations as specified in chapter 2 of the ASCE 7-16 and allowable design loads per the 2015 Aluminum Design Manual.
2. Panels are assumed to be in portrait orientation with a maximum length of 67.5"

Max Rail Spans for SunModo SMR200 Rail System

Table 41b

Mean Roof Height: 15 < h ≤ 30 ft
Roof Angle: 7 < θ ≤ 20 degrees
Exposure Category: C
Panel Orientation: Portrait
North/South Support γ_E = 1.5
Roof Type : Hip h/B = ≤ 0.5

Roof Wind Zone	Ground Snow Load (psf)	Wind Speed (mph)												
		90	95	100	105	110	115	120	130	140	150	160	170	180
Zone 1	0	119	119	117	111	107	103	99	90	82	76	70	65	61
	10	107	107	107	107	106	103	99	90	82	76	70	65	61
	20	82	82	82	82	82	82	82	81	79	76	70	65	61
	30	82	82	82	82	82	82	82	81	79	76	70	65	61
	40	73	73	73	73	73	73	73	73	72	71	70	65	61
	50	66	66	66	66	66	66	66	66	66	66	65	64	61
	60	60	60	60	60	60	60	60	60	60	60	60	60	59
	70	56	56	56	56	56	56	56	56	56	56	56	56	56
	80	53	53	53	53	53	53	53	53	53	53	53	53	53
	90	50	50	50	50	50	50	50	50	50	50	50	50	50
Zone 2r	0	102	97	92	86	81	76	72	65	59	54	50	46	43
	10	102	97	92	86	81	76	72	65	59	54	50	46	43
	20	82	82	82	82	81	76	72	65	59	54	50	46	43
	30	82	82	82	82	81	76	72	65	59	54	50	46	43
	40	73	73	73	73	73	73	72	65	59	54	50	46	43
	50	66	66	66	66	66	66	66	65	59	54	50	46	43
	60	60	60	60	60	60	60	60	60	59	54	50	46	43
	70	56	56	56	56	56	56	56	56	56	54	50	46	43
	80	53	53	53	53	53	53	53	53	53	53	50	46	43
	90	50	50	50	50	50	50	50	50	50	50	50	46	43
Zones 2e & 3	0	115	110	105	100	96	91	86	77	70	64	59	55	51
	10	107	107	105	100	96	91	86	77	70	64	59	55	51
	20	82	82	82	82	82	82	82	77	70	64	59	55	51
	30	82	82	82	82	82	82	82	77	70	64	59	55	51
	40	73	73	73	73	73	73	73	73	70	64	59	55	51
	50	66	66	66	66	66	66	66	66	66	64	59	55	51
	60	60	60	60	60	60	60	60	60	60	60	59	55	51
	70	56	56	56	56	56	56	56	56	56	56	56	55	51
	80	53	53	53	53	53	53	53	53	53	53	53	53	51
	90	50	50	50	50	50	50	50	50	50	50	50	50	50

Notes:

1. Tables are based on critical rail span for load combinations as specified in chapter 2 of the ASCE 7-16 and allowable design loads per the 2015 Aluminum Design Manual.
2. Panels are assumed to be in portrait orientation with a maximum length of 67.5"

Max Rail Spans for SunModo SMR200 Rail System

Table 42a

Mean Roof Height: 15 < h ≤ 30 ft
Roof Angle: 7 < θ ≤ 20 degrees
Exposure Category: D
Panel Orientation: Portrait
North/South Support Y_E = 1
Roof Type : Hip h/B = ≤ 0.5

Roof Wind Zone	Ground Snow Load (psf)	Wind Speed (mph)												
		90	95	100	105	110	115	120	130	140	150	160	170	180
Zone 1	0	119	119	119	119	119	114	110	102	96	87	81	75	70
	10	107	107	106	105	104	102	101	98	96	87	81	75	70
	20	82	82	82	82	82	81	81	79	77	75	74	72	70
	30	82	82	82	82	82	81	81	79	77	75	74	72	70
	40	73	73	73	73	73	73	73	72	71	69	68	67	65
	50	66	66	66	66	66	66	66	66	66	65	63	62	61
	60	60	60	60	60	60	60	60	60	60	60	60	59	58
	70	56	56	56	56	56	56	56	56	56	56	56	56	55
	80	53	53	53	53	53	53	53	53	53	53	53	53	52
	90	50	50	50	50	50	50	50	50	50	50	50	50	50
Zone 2r	0	114	108	103	99	95	89	84	76	69	63	58	53	50
	10	107	107	103	99	95	89	84	76	69	63	58	53	50
	20	82	82	82	82	82	81	81	76	69	63	58	53	50
	30	82	82	82	82	82	81	81	76	69	63	58	53	50
	40	73	73	73	73	73	73	73	72	69	63	58	53	50
	50	66	66	66	66	66	66	66	66	66	63	58	53	50
	60	60	60	60	60	60	60	60	60	60	60	58	53	50
	70	56	56	56	56	56	56	56	56	56	56	56	53	50
	80	53	53	53	53	53	53	53	53	53	53	53	53	50
	90	50	50	50	50	50	50	50	50	50	50	50	50	50
Zones 2e & 3	0	119	119	117	112	107	103	99	91	82	75	69	64	59
	10	107	107	106	105	104	102	99	91	82	75	69	64	59
	20	82	82	82	82	82	81	81	79	77	75	69	64	59
	30	82	82	82	82	82	81	81	79	77	75	69	64	59
	40	73	73	73	73	73	73	73	72	71	69	68	64	59
	50	66	66	66	66	66	66	66	66	66	65	63	62	59
	60	60	60	60	60	60	60	60	60	60	60	60	59	58
	70	56	56	56	56	56	56	56	56	56	56	56	56	55
	80	53	53	53	53	53	53	53	53	53	53	53	53	52
	90	50	50	50	50	50	50	50	50	50	50	50	50	50

Notes:

1. Tables are based on critical rail span for load combinations as specified in chapter 2 of the ASCE 7-16 and allowable design loads per the 2015 Aluminum Design Manual.
2. Panels are assumed to be in portrait orientation with a maximum length of 67.5"

Structural ENGINUITY INC
Ingenuity in Engineering

SUNMODO®

Max Rail Spans for SunModo SMR200 Rail System

Table 42b

Mean Roof Height: 15 < h ≤ 30 ft
Roof Angle: 7 < θ ≤ 20 degrees
Exposure Category: D
Panel Orientation: Portrait
North/South Support γ_E = 1.5
Roof Type : Hip h/B = ≤ 0.5

Roof Wind Zone	Ground Snow Load (psf)	Wind Speed (mph)												
		90	95	100	105	110	115	120	130	140	150	160	170	180
Zone 1	0	119	113	108	103	99	95	90	81	74	68	63	59	55
	10	107	107	106	103	99	95	90	81	74	68	63	59	55
	20	82	82	82	82	82	81	81	79	74	68	63	59	55
	30	82	82	82	82	82	81	81	79	74	68	63	59	55
	40	73	73	73	73	73	73	73	72	71	68	63	59	55
	50	66	66	66	66	66	66	66	66	66	65	63	59	55
	60	60	60	60	60	60	60	60	60	60	60	60	59	55
	70	56	56	56	56	56	56	56	56	56	56	56	56	55
	80	53	53	53	53	53	53	53	53	53	53	53	53	52
	90	50	50	50	50	50	50	50	50	50	50	50	50	50
Zone 2r	0	95	88	82	77	72	68	64	58	53	48	45	41	39
	10	95	88	82	77	72	68	64	58	53	48	45	41	39
	20	82	82	82	77	72	68	64	58	53	48	45	41	39
	30	82	82	82	77	72	68	64	58	53	48	45	41	39
	40	73	73	73	73	72	68	64	58	53	48	45	41	39
	50	66	66	66	66	66	66	64	58	53	48	45	41	39
	60	60	60	60	60	60	60	60	58	53	48	45	41	39
	70	56	56	56	56	56	56	56	56	53	48	45	41	39
	80	53	53	53	53	53	53	53	53	53	48	45	41	39
	90	50	50	50	50	50	50	50	50	50	48	45	41	39
Zones 2e & 3	0	107	102	97	92	86	81	77	69	63	58	53	49	46
	10	107	102	97	92	86	81	77	69	63	58	53	49	46
	20	82	82	82	82	82	81	77	69	63	58	53	49	46
	30	82	82	82	82	82	81	77	69	63	58	53	49	46
	40	73	73	73	73	73	73	73	69	63	58	53	49	46
	50	66	66	66	66	66	66	66	66	63	58	53	49	46
	60	60	60	60	60	60	60	60	60	60	58	53	49	46
	70	56	56	56	56	56	56	56	56	56	56	53	49	46
	80	53	53	53	53	53	53	53	53	53	53	53	49	46
	90	50	50	50	50	50	50	50	50	50	50	50	49	46

Notes:

1. Tables are based on critical rail span for load combinations as specified in chapter 2 of the ASCE 7-16 and allowable design loads per the 2015 Aluminum Design Manual.
2. Panels are assumed to be in portrait orientation with a maximum length of 67.5"

Max Rail Spans for SunModo SMR200 Rail System

Table 43a

Mean Roof Height: 15 < h ≤ 30 ft
Roof Angle: 20 < θ ≤ 27 degrees
Exposure Category: B
Panel Orientation: Portrait
North/South Support Y_E = 1
Roof Type : Hip

Roof Wind Zone	Ground Snow Load (psf)	Wind Speed (mph)												
		90	95	100	105	110	115	120	130	140	150	160	170	180
Zone 1	0	119	119	119	119	119	119	119	119	119	117	110	104	99
	10	116	116	116	116	116	116	116	116	114	112	109	104	99
	20	97	97	97	97	97	97	97	97	96	94	93	91	89
	30	83	83	83	83	83	83	83	83	83	83	82	81	79
	40	73	73	73	73	73	73	73	73	73	73	73	73	72
	50	66	66	66	66	66	66	66	66	66	66	66	66	66
	60	61	61	61	61	61	61	61	61	61	61	61	61	61
	70	57	57	57	57	57	57	57	57	57	57	57	57	57
	80	53	53	53	53	53	53	53	53	53	53	53	53	53
	90	51	51	51	51	51	51	51	51	51	51	51	51	51
Zones 2e, 2r, & 3	0	119	119	119	119	119	119	119	112	105	98	91	84	77
	10	116	116	116	116	116	116	116	112	105	98	91	84	77
	20	97	97	97	97	97	97	97	97	96	94	91	84	77
	30	83	83	83	83	83	83	83	83	83	83	82	81	77
	40	73	73	73	73	73	73	73	73	73	73	73	73	72
	50	66	66	66	66	66	66	66	66	66	66	66	66	66
	60	61	61	61	61	61	61	61	61	61	61	61	61	61
	70	57	57	57	57	57	57	57	57	57	57	57	57	57
	80	53	53	53	53	53	53	53	53	53	53	53	53	53
	90	51	51	51	51	51	51	51	51	51	51	51	51	51

Notes:

1. Tables are based on critical rail span for load combinations as specified in chapter 2 of the ASCE 7-16 and allowable design loads per the 2015 Aluminum Design Manual.
2. Panels are assumed to be in portrait orientation with a maximum length of 67.5"

Max Rail Spans for SunModo SMR200 Rail System

Table 43b

Mean Roof Height: 15 < h ≤ 30 ft
Roof Angle: 20 < θ ≤ 27 degrees
Exposure Category: B
Panel Orientation: Portrait
North/South Support γ_E = 1.5
Roof Type : Hip

Roof Wind Zone	Ground Snow Load (psf)	Wind Speed (mph)												
		90	95	100	105	110	115	120	130	140	150	160	170	180
Zone 1	0	119	119	119	119	119	119	119	111	103	97	89	82	76
	10	116	116	116	116	116	116	116	111	103	97	89	82	76
	20	97	97	97	97	97	97	97	97	96	94	89	82	76
	30	83	83	83	83	83	83	83	83	83	83	82	81	76
	40	73	73	73	73	73	73	73	73	73	73	73	73	72
	50	66	66	66	66	66	66	66	66	66	66	66	66	66
	60	61	61	61	61	61	61	61	61	61	61	61	61	61
	70	57	57	57	57	57	57	57	57	57	57	57	57	57
	80	53	53	53	53	53	53	53	53	53	53	53	53	53
	90	51	51	51	51	51	51	51	51	51	51	51	51	51
Zones 2e, 2r, & 3	0	119	119	119	113	108	104	100	91	83	75	69	64	59
	10	116	116	116	113	108	104	100	91	83	75	69	64	59
	20	97	97	97	97	97	97	97	91	83	75	69	64	59
	30	83	83	83	83	83	83	83	83	83	75	69	64	59
	40	73	73	73	73	73	73	73	73	73	73	69	64	59
	50	66	66	66	66	66	66	66	66	66	66	66	64	59
	60	61	61	61	61	61	61	61	61	61	61	61	61	59
	70	57	57	57	57	57	57	57	57	57	57	57	57	57
	80	53	53	53	53	53	53	53	53	53	53	53	53	53
	90	51	51	51	51	51	51	51	51	51	51	51	51	51

Notes:

1. Tables are based on critical rail span for load combinations as specified in chapter 2 of the ASCE 7-16 and allowable design loads per the 2015 Aluminum Design Manual.
2. Panels are assumed to be in portrait orientation with a maximum length of 67.5"

Max Rail Spans for SunModo SMR200 Rail System

Table 44a

Mean Roof Height: 15 < h ≤ 30 ft
Roof Angle: 20 < θ ≤ 27 degrees
Exposure Category: C
Panel Orientation: Portrait
North/South Support Y_E = 1
Roof Type : Hip

Roof Wind Zone	Ground Snow Load (psf)	Wind Speed (mph)												
		90	95	100	105	110	115	120	130	140	150	160	170	180
Zone 1	0	119	119	119	119	119	119	119	114	107	100	93	86	79
	10	116	116	116	116	116	115	114	111	107	100	93	86	79
	20	97	97	97	97	97	96	95	94	92	90	88	86	79
	30	83	83	83	83	83	83	83	83	81	80	78	77	75
	40	73	73	73	73	73	73	73	73	73	73	71	70	69
	50	66	66	66	66	66	66	66	66	66	66	66	65	64
	60	61	61	61	61	61	61	61	61	61	61	61	61	60
	70	57	57	57	57	57	57	57	57	57	57	57	57	57
	80	53	53	53	53	53	53	53	53	53	53	53	53	53
	90	51	51	51	51	51	51	51	51	51	51	51	51	51
Zones 2e, 2r, & 3	0	119	119	119	117	112	107	103	96	86	79	72	67	62
	10	116	116	116	116	112	107	103	96	86	79	72	67	62
	20	97	97	97	97	97	96	95	94	86	79	72	67	62
	30	83	83	83	83	83	83	83	83	81	79	72	67	62
	40	73	73	73	73	73	73	73	73	73	73	71	67	62
	50	66	66	66	66	66	66	66	66	66	66	66	65	62
	60	61	61	61	61	61	61	61	61	61	61	61	61	60
	70	57	57	57	57	57	57	57	57	57	57	57	57	57
	80	53	53	53	53	53	53	53	53	53	53	53	53	53
	90	51	51	51	51	51	51	51	51	51	51	51	51	51

Notes:

1. Tables are based on critical rail span for load combinations as specified in chapter 2 of the ASCE 7-16 and allowable design loads per the 2015 Aluminum Design Manual.
2. Panels are assumed to be in portrait orientation with a maximum length of 67.5"

Max Rail Spans for SunModo SMR200 Rail System

Table 44b

Mean Roof Height: 15 < h ≤ 30 ft
Roof Angle: 20 < θ ≤ 27 degrees
Exposure Category: C
Panel Orientation: Portrait
North/South Support γ_E = 1.5
Roof Type : Hip

Roof Wind Zone	Ground Snow Load (psf)	Wind Speed (mph)												
		90	95	100	105	110	115	120	130	140	150	160	170	180
Zone 1	0	119	119	119	116	110	106	102	94	85	77	71	65	60
	10	116	116	116	116	110	106	102	94	85	77	71	65	60
	20	97	97	97	97	97	96	95	94	85	77	71	65	60
	30	83	83	83	83	83	83	83	83	81	77	71	65	60
	40	73	73	73	73	73	73	73	73	73	73	71	65	60
	50	66	66	66	66	66	66	66	66	66	66	66	65	60
	60	61	61	61	61	61	61	61	61	61	61	61	61	60
	70	57	57	57	57	57	57	57	57	57	57	57	57	57
	80	53	53	53	53	53	53	53	53	53	53	53	53	53
	90	51	51	51	51	51	51	51	51	51	51	51	51	51
Zones 2e, 2r, & 3	0	112	106	101	97	91	86	81	73	66	60	56	51	48
	10	112	106	101	97	91	86	81	73	66	60	56	51	48
	20	97	97	97	97	91	86	81	73	66	60	56	51	48
	30	83	83	83	83	83	83	81	73	66	60	56	51	48
	40	73	73	73	73	73	73	73	73	66	60	56	51	48
	50	66	66	66	66	66	66	66	66	66	60	56	51	48
	60	61	61	61	61	61	61	61	61	61	60	56	51	48
	70	57	57	57	57	57	57	57	57	57	57	56	51	48
	80	53	53	53	53	53	53	53	53	53	53	53	51	48
	90	51	51	51	51	51	51	51	51	51	51	51	51	48

Notes:

1. Tables are based on critical rail span for load combinations as specified in chapter 2 of the ASCE 7-16 and allowable design loads per the 2015 Aluminum Design Manual.
2. Panels are assumed to be in portrait orientation with a maximum length of 67.5"

Max Rail Spans for SunModo SMR200 Rail System

Table 45a

Mean Roof Height: 15 < h ≤ 30 ft
Roof Angle: 20 < θ ≤ 27 degrees
Exposure Category: D
Panel Orientation: Portrait
North/South Support Y_E = 1
Roof Type : Hip

Roof Wind Zone	Ground Snow Load (psf)	Wind Speed (mph)												
		90	95	100	105	110	115	120	130	140	150	160	170	180
Zone 1	0	119	119	119	119	119	119	119	112	104	98	90	83	77
	10	116	116	116	116	116	114	113	110	104	98	90	83	77
	20	97	97	97	97	97	96	95	93	91	89	87	83	77
	30	83	83	83	83	83	83	83	82	81	79	78	76	74
	40	73	73	73	73	73	73	73	73	73	72	71	70	68
	50	66	66	66	66	66	66	66	66	66	66	66	65	64
	60	61	61	61	61	61	61	61	61	61	61	61	61	60
	70	57	57	57	57	57	57	57	57	57	57	57	57	57
	80	53	53	53	53	53	53	53	53	53	53	53	53	53
	90	51	51	51	51	51	51	51	51	51	51	51	51	51
Zones 2e, 2r, & 3	0	119	119	119	114	109	105	101	92	84	76	70	65	60
	10	116	116	116	114	109	105	101	92	84	76	70	65	60
	20	97	97	97	97	97	96	95	92	84	76	70	65	60
	30	83	83	83	83	83	83	83	82	81	76	70	65	60
	40	73	73	73	73	73	73	73	73	73	72	70	65	60
	50	66	66	66	66	66	66	66	66	66	66	66	65	60
	60	61	61	61	61	61	61	61	61	61	61	61	61	60
	70	57	57	57	57	57	57	57	57	57	57	57	57	57
	80	53	53	53	53	53	53	53	53	53	53	53	53	53
	90	51	51	51	51	51	51	51	51	51	51	51	51	51

Notes:

1. Tables are based on critical rail span for load combinations as specified in chapter 2 of the ASCE 7-16 and allowable design loads per the 2015 Aluminum Design Manual.
2. Panels are assumed to be in portrait orientation with a maximum length of 67.5"

Structural ENGINUITY INC
Ingenuity in Engineering

SUNMODO®

Max Rail Spans for SunModo SMR200 Rail System

Table 45b

Mean Roof Height: 15 < h ≤ 30 ft
Roof Angle: 20 < θ ≤ 27 degrees
Exposure Category: D
Panel Orientation: Portrait
North/South Support γ_E = 1.5
Roof Type : Hip

Roof Wind Zone	Ground Snow Load (psf)	Wind Speed (mph)												
		90	95	100	105	110	115	120	130	140	150	160	170	180
Zone 1	0	119	119	118	113	108	104	100	90	82	74	68	63	59
	10	116	116	116	113	108	104	100	90	82	74	68	63	59
	20	97	97	97	97	97	96	95	90	82	74	68	63	59
	30	83	83	83	83	83	83	83	82	81	74	68	63	59
	40	73	73	73	73	73	73	73	73	73	72	68	63	59
	50	66	66	66	66	66	66	66	66	66	66	66	63	59
	60	61	61	61	61	61	61	61	61	61	61	61	61	59
	70	57	57	57	57	57	57	57	57	57	57	57	57	57
	80	53	53	53	53	53	53	53	53	53	53	53	53	53
	90	51	51	51	51	51	51	51	51	51	51	51	51	51
Zones 2e, 2r, & 3	0	109	104	99	94	88	83	78	71	64	59	54	50	46
	10	109	104	99	94	88	83	78	71	64	59	54	50	46
	20	97	97	97	94	88	83	78	71	64	59	54	50	46
	30	83	83	83	83	83	83	78	71	64	59	54	50	46
	40	73	73	73	73	73	73	73	71	64	59	54	50	46
	50	66	66	66	66	66	66	66	66	64	59	54	50	46
	60	61	61	61	61	61	61	61	61	61	59	54	50	46
	70	57	57	57	57	57	57	57	57	57	57	54	50	46
	80	53	53	53	53	53	53	53	53	53	53	53	50	46
	90	51	51	51	51	51	51	51	51	51	51	51	50	46

Notes:

1. Tables are based on critical rail span for load combinations as specified in chapter 2 of the ASCE 7-16 and allowable design loads per the 2015 Aluminum Design Manual.
2. Panels are assumed to be in portrait orientation with a maximum length of 67.5"

Structural ENGINUITY INC
Ingenuity in Engineering

SUNMODO®

Max Rail Spans for SunModo SMR200 Rail System

Table 46a

Mean Roof Height: 15 < h ≤ 30 ft
Roof Angle: 27 < θ ≤ 45 degrees
Exposure Category: B
Panel Orientation: Portrait
North/South Support Y_E = 1
Roof Type : Hip

Roof Wind Zone	Ground Snow Load (psf)	Wind Speed (mph)												
		90	95	100	105	110	115	120	130	140	150	160	170	180
Zone 1	0	119	119	119	119	119	119	119	119	118	111	105	98	91
	10	117	117	117	117	117	117	117	117	117	111	105	98	91
	20	101	101	101	101	101	101	101	101	99	98	96	94	91
	30	87	87	87	87	87	87	87	87	87	87	85	84	83
	40	77	77	77	77	77	77	77	77	77	77	77	77	76
	50	70	70	70	70	70	70	70	70	70	70	70	70	70
	60	65	65	65	65	65	65	65	65	65	65	65	65	65
	70	60	60	60	60	60	60	60	60	60	60	60	60	60
	80	57	57	57	57	57	57	57	57	57	57	57	57	57
	90	54	54	54	54	54	54	54	54	54	54	54	54	54
Zone 2e	0	119	119	119	119	119	119	119	119	119	111	104	96	88
	10	117	117	117	117	117	117	117	117	117	111	104	96	88
	20	101	101	101	101	101	101	101	101	99	98	96	94	88
	30	87	87	87	87	87	87	87	87	87	87	85	84	83
	40	77	77	77	77	77	77	77	77	77	77	77	77	76
	50	70	70	70	70	70	70	70	70	70	70	70	70	70
	60	65	65	65	65	65	65	65	65	65	65	65	65	65
	70	60	60	60	60	60	60	60	60	60	60	60	60	60
	80	57	57	57	57	57	57	57	57	57	57	57	57	57
	90	54	54	54	54	54	54	54	54	54	54	54	54	54
Zone 2r	0	119	119	119	119	119	119	117	108	101	92	84	77	71
	10	117	117	117	117	117	117	117	108	101	92	84	77	71
	20	101	101	101	101	101	101	101	101	99	92	84	77	71
	30	87	87	87	87	87	87	87	87	87	87	84	77	71
	40	77	77	77	77	77	77	77	77	77	77	77	77	71
	50	70	70	70	70	70	70	70	70	70	70	70	70	70
	60	65	65	65	65	65	65	65	65	65	65	65	65	65
	70	60	60	60	60	60	60	60	60	60	60	60	60	60
	80	57	57	57	57	57	57	57	57	57	57	57	57	57
	90	54	54	54	54	54	54	54	54	54	54	54	54	54
Zone 3	0	119	119	119	119	119	119	119	114	105	96	86	78	72
	10	117	117	117	117	117	117	117	114	105	96	86	78	72
	20	101	101	101	101	101	101	101	101	99	96	86	78	72
	30	87	87	87	87	87	87	87	87	87	87	85	78	72
	40	77	77	77	77	77	77	77	77	77	77	77	77	72
	50	70	70	70	70	70	70	70	70	70	70	70	70	70
	60	65	65	65	65	65	65	65	65	65	65	65	65	65
	70	60	60	60	60	60	60	60	60	60	60	60	60	60
	80	57	57	57	57	57	57	57	57	57	57	57	57	57
	90	54	54	54	54	54	54	54	54	54	54	54	54	54

Notes:

1. Tables are based on critical rail span for load combinations as specified in chapter 2 of the ASCE 7-16 and allowable design loads per the 2015 Aluminum Design Manual.
2. Panels are assumed to be in portrait orientation with a maximum length of 67.5"

Structural ENGINUITY INC
Ingenuity in Engineering

SUNMODO®

Max Rail Spans for SunModo SMR200 Rail System

Table 46b

Mean Roof Height: 15 < h ≤ 30 ft
Roof Angle: 27 < θ ≤ 45 degrees
Exposure Category: B
Panel Orientation: Portrait
North/South Support γ_E = 1.5
Roof Type : Hip

Roof Wind Zone	Ground Snow Load (psf)	Wind Speed (mph)												
		90	95	100	105	110	115	120	130	140	150	160	170	180
Zone 1	0	119	119	119	119	119	117	113	105	97	89	82	76	70
	10	117	117	117	117	117	117	113	105	97	89	82	76	70
	20	101	101	101	101	101	101	101	101	97	89	82	76	70
	30	87	87	87	87	87	87	87	87	87	87	82	76	70
	40	77	77	77	77	77	77	77	77	77	77	77	76	70
	50	70	70	70	70	70	70	70	70	70	70	70	70	70
	60	65	65	65	65	65	65	65	65	65	65	65	65	65
	70	60	60	60	60	60	60	60	60	60	60	60	60	60
	80	57	57	57	57	57	57	57	57	57	57	57	57	57
	90	54	54	54	54	54	54	54	54	54	54	54	54	54
Zone 2e	0	119	119	119	119	119	119	113	104	95	85	77	71	65
	10	117	117	117	117	117	117	113	104	95	85	77	71	65
	20	101	101	101	101	101	101	101	101	95	85	77	71	65
	30	87	87	87	87	87	87	87	87	87	85	77	71	65
	40	77	77	77	77	77	77	77	77	77	77	77	71	65
	50	70	70	70	70	70	70	70	70	70	70	70	70	65
	60	65	65	65	65	65	65	65	65	65	65	65	65	65
	70	60	60	60	60	60	60	60	60	60	60	60	60	60
	80	57	57	57	57	57	57	57	57	57	57	57	57	57
	90	54	54	54	54	54	54	54	54	54	54	54	54	54
Zone 2r	0	119	119	115	109	105	100	94	84	76	69	64	59	54
	10	117	117	115	109	105	100	94	84	76	69	64	59	54
	20	101	101	101	101	101	100	94	84	76	69	64	59	54
	30	87	87	87	87	87	87	87	84	76	69	64	59	54
	40	77	77	77	77	77	77	77	77	76	69	64	59	54
	50	70	70	70	70	70	70	70	70	70	69	64	59	54
	60	65	65	65	65	65	65	65	65	65	65	64	59	54
	70	60	60	60	60	60	60	60	60	60	60	60	59	54
	80	57	57	57	57	57	57	57	57	57	57	57	57	54
	90	54	54	54	54	54	54	54	54	54	54	54	54	54
Zone 3	0	119	119	119	115	109	104	99	87	77	69	63	58	53
	10	117	117	117	115	109	104	99	87	77	69	63	58	53
	20	101	101	101	101	101	101	99	87	77	69	63	58	53
	30	87	87	87	87	87	87	87	87	77	69	63	58	53
	40	77	77	77	77	77	77	77	77	77	69	63	58	53
	50	70	70	70	70	70	70	70	70	70	69	63	58	53
	60	65	65	65	65	65	65	65	65	65	65	63	58	53
	70	60	60	60	60	60	60	60	60	60	60	60	58	53
	80	57	57	57	57	57	57	57	57	57	57	57	57	53
	90	54	54	54	54	54	54	54	54	54	54	54	54	53

Notes:

1. Tables are based on critical rail span for load combinations as specified in chapter 2 of the ASCE 7-16 and allowable design loads per the 2015 Aluminum Design Manual.
2. Panels are assumed to be in portrait orientation with a maximum length of 67.5"

Structural ENGINUITY INC
Ingenuity in Engineering

SUNMODO®

Max Rail Spans for SunModo SMR200 Rail System

Table 47a

Mean Roof Height: 15 < h ≤ 30 ft
Roof Angle: 27 < θ ≤ 45 degrees
Exposure Category: C
Panel Orientation: Portrait
North/South Support γ_E = 1
Roof Type : Hip

Roof Wind Zone	Ground Snow Load (psf)	Wind Speed (mph)												
		90	95	100	105	110	115	120	130	140	150	160	170	180
Zone 1	0	119	119	119	119	119	119	117	108	101	93	85	79	73
	10	117	117	117	117	117	117	116	108	101	93	85	79	73
	20	101	101	101	101	101	100	99	97	95	93	85	79	73
	30	87	87	87	87	87	87	87	86	85	83	82	79	73
	40	77	77	77	77	77	77	77	77	77	76	75	74	72
	50	70	70	70	70	70	70	70	70	70	70	70	69	67
	60	65	65	65	65	65	65	65	65	65	65	65	64	63
	70	60	60	60	60	60	60	60	60	60	60	60	60	60
	80	57	57	57	57	57	57	57	57	57	57	57	57	57
	90	54	54	54	54	54	54	54	54	54	54	54	54	54
Zone 2e	0	119	119	119	119	119	119	118	108	100	90	82	74	68
	10	117	117	117	117	117	117	116	108	100	90	82	74	68
	20	101	101	101	101	101	100	99	97	95	90	82	74	68
	30	87	87	87	87	87	87	87	86	85	83	82	74	68
	40	77	77	77	77	77	77	77	77	77	76	75	74	68
	50	70	70	70	70	70	70	70	70	70	70	70	69	67
	60	65	65	65	65	65	65	65	65	65	65	65	64	63
	70	60	60	60	60	60	60	60	60	60	60	60	60	60
	80	57	57	57	57	57	57	57	57	57	57	57	57	57
	90	54	54	54	54	54	54	54	54	54	54	54	54	54
Zone 2r	0	119	119	118	113	108	104	99	88	80	73	67	62	57
	10	117	117	117	113	108	104	99	88	80	73	67	62	57
	20	101	101	101	101	101	100	99	88	80	73	67	62	57
	30	87	87	87	87	87	87	87	86	80	73	67	62	57
	40	77	77	77	77	77	77	77	77	77	73	67	62	57
	50	70	70	70	70	70	70	70	70	70	70	67	62	57
	60	65	65	65	65	65	65	65	65	65	65	65	62	57
	70	60	60	60	60	60	60	60	60	60	60	60	60	57
	80	57	57	57	57	57	57	57	57	57	57	57	57	57
	90	54	54	54	54	54	54	54	54	54	54	54	54	54
Zone 3	0	119	119	119	119	114	108	103	92	82	73	66	61	56
	10	117	117	117	117	114	108	103	92	82	73	66	61	56
	20	101	101	101	101	101	100	99	92	82	73	66	61	56
	30	87	87	87	87	87	87	87	86	82	73	66	61	56
	40	77	77	77	77	77	77	77	77	77	73	66	61	56
	50	70	70	70	70	70	70	70	70	70	70	66	61	56
	60	65	65	65	65	65	65	65	65	65	65	65	61	56
	70	60	60	60	60	60	60	60	60	60	60	60	60	56
	80	57	57	57	57	57	57	57	57	57	57	57	57	56
	90	54	54	54	54	54	54	54	54	54	54	54	54	54

Notes:

1. Tables are based on critical rail span for load combinations as specified in chapter 2 of the ASCE 7-16 and allowable design loads per the 2015 Aluminum Design Manual.
2. Panels are assumed to be in portrait orientation with a maximum length of 67.5"

Structural ENGINUITY INC
Ingenuity in Engineering

SUNMODO®

Max Rail Spans for SunModo SMR200 Rail System

Table 47b

Mean Roof Height: 15 < h ≤ 30 ft
Roof Angle: 27 < θ ≤ 45 degrees
Exposure Category: C
Panel Orientation: Portrait
North/South Support γ_E = 1.5
Roof Type : Hip

Roof Wind Zone	Ground Snow Load (psf)	Wind Speed (mph)												
		90	95	100	105	110	115	120	130	140	150	160	170	180
Zone 1	0	119	119	114	109	105	101	95	86	78	71	66	61	57
	10	117	117	114	109	105	101	95	86	78	71	66	61	57
	20	101	101	101	101	101	100	95	86	78	71	66	61	57
	30	87	87	87	87	87	87	87	86	78	71	66	61	57
	40	77	77	77	77	77	77	77	77	77	71	66	61	57
	50	70	70	70	70	70	70	70	70	70	70	66	61	57
	60	65	65	65	65	65	65	65	65	65	65	65	61	57
	70	60	60	60	60	60	60	60	60	60	60	60	60	57
	80	57	57	57	57	57	57	57	57	57	57	57	57	57
	90	54	54	54	54	54	54	54	54	54	54	54	54	54
Zone 2e	0	119	119	115	109	104	99	93	82	74	66	61	55	51
	10	117	117	115	109	104	99	93	82	74	66	61	55	51
	20	101	101	101	101	101	99	93	82	74	66	61	55	51
	30	87	87	87	87	87	87	87	82	74	66	61	55	51
	40	77	77	77	77	77	77	77	77	74	66	61	55	51
	50	70	70	70	70	70	70	70	70	70	66	61	55	51
	60	65	65	65	65	65	65	65	65	65	65	61	55	51
	70	60	60	60	60	60	60	60	60	60	60	60	55	51
	80	57	57	57	57	57	57	57	57	57	57	57	55	51
	90	54	54	54	54	54	54	54	54	54	54	54	54	51
Zone 2r	0	108	102	96	90	84	79	75	67	61	55	51	47	44
	10	108	102	96	90	84	79	75	67	61	55	51	47	44
	20	101	101	96	90	84	79	75	67	61	55	51	47	44
	30	87	87	87	87	84	79	75	67	61	55	51	47	44
	40	77	77	77	77	77	77	75	67	61	55	51	47	44
	50	70	70	70	70	70	70	70	67	61	55	51	47	44
	60	65	65	65	65	65	65	65	65	61	55	51	47	44
	70	60	60	60	60	60	60	60	60	60	55	51	47	44
	80	57	57	57	57	57	57	57	57	57	55	51	47	44
	90	54	54	54	54	54	54	54	54	54	54	51	47	44
Zone 3	0	113	107	101	93	87	81	76	67	60	54	49	45	42
	10	113	107	101	93	87	81	76	67	60	54	49	45	42
	20	101	101	101	93	87	81	76	67	60	54	49	45	42
	30	87	87	87	87	87	81	76	67	60	54	49	45	42
	40	77	77	77	77	77	77	76	67	60	54	49	45	42
	50	70	70	70	70	70	70	70	67	60	54	49	45	42
	60	65	65	65	65	65	65	65	65	60	54	49	45	42
	70	60	60	60	60	60	60	60	60	60	54	49	45	42
	80	57	57	57	57	57	57	57	57	57	54	49	45	42
	90	54	54	54	54	54	54	54	54	54	54	49	45	42

Notes:

1. Tables are based on critical rail span for load combinations as specified in chapter 2 of the ASCE 7-16 and allowable design loads per the 2015 Aluminum Design Manual.
2. Panels are assumed to be in portrait orientation with a maximum length of 67.5"

Structural ENGINUITY INC
Ingenuity in Engineering

SUNMODO®

Max Rail Spans for SunModo SMR200 Rail System

Table 48a

Mean Roof Height: 15 < h ≤ 30 ft
Roof Angle: 27 < θ ≤ 45 degrees
Exposure Category: D
Panel Orientation: Portrait
North/South Support γ_E = 1
Roof Type : Hip

Roof Wind Zone	Ground Snow Load (psf)	Wind Speed (mph)												
		90	95	100	105	110	115	120	130	140	150	160	170	180
Zone 1	0	119	119	119	119	117	112	108	100	91	83	77	71	66
	10	117	117	117	117	116	112	108	100	91	83	77	71	66
	20	101	101	101	100	99	98	97	95	91	83	77	71	66
	30	87	87	87	87	87	87	86	85	83	81	77	71	66
	40	77	77	77	77	77	77	77	77	76	74	73	71	66
	50	70	70	70	70	70	70	70	70	70	69	68	67	66
	60	65	65	65	65	65	65	65	65	65	65	64	63	62
	70	60	60	60	60	60	60	60	60	60	60	60	60	59
	80	57	57	57	57	57	57	57	57	57	57	57	57	56
	90	54	54	54	54	54	54	54	54	54	54	54	54	54
Zone 2e	0	119	119	119	119	118	113	108	98	88	79	72	66	61
	10	117	117	117	117	116	113	108	98	88	79	72	66	61
	20	101	101	101	100	99	98	97	95	88	79	72	66	61
	30	87	87	87	87	87	87	86	85	83	79	72	66	61
	40	77	77	77	77	77	77	77	77	76	74	72	66	61
	50	70	70	70	70	70	70	70	70	70	69	68	66	61
	60	65	65	65	65	65	65	65	65	65	65	64	63	61
	70	60	60	60	60	60	60	60	60	60	60	60	60	59
	80	57	57	57	57	57	57	57	57	57	57	57	57	56
	90	54	54	54	54	54	54	54	54	54	54	54	54	54
Zone 2r	0	119	115	109	104	99	93	88	79	71	65	60	55	51
	10	117	115	109	104	99	93	88	79	71	65	60	55	51
	20	101	101	101	100	99	93	88	79	71	65	60	55	51
	30	87	87	87	87	87	87	86	79	71	65	60	55	51
	40	77	77	77	77	77	77	77	77	71	65	60	55	51
	50	70	70	70	70	70	70	70	70	70	65	60	55	51
	60	65	65	65	65	65	65	65	65	65	65	60	55	51
	70	60	60	60	60	60	60	60	60	60	60	60	55	51
	80	57	57	57	57	57	57	57	57	57	57	57	55	51
	90	54	54	54	54	54	54	54	54	54	54	54	54	51
Zone 3	0	119	119	115	109	104	98	91	80	72	64	58	53	49
	10	117	117	115	109	104	98	91	80	72	64	58	53	49
	20	101	101	101	100	99	98	91	80	72	64	58	53	49
	30	87	87	87	87	87	87	86	80	72	64	58	53	49
	40	77	77	77	77	77	77	77	77	72	64	58	53	49
	50	70	70	70	70	70	70	70	70	70	64	58	53	49
	60	65	65	65	65	65	65	65	65	65	64	58	53	49
	70	60	60	60	60	60	60	60	60	60	60	58	53	49
	80	57	57	57	57	57	57	57	57	57	57	57	53	49
	90	54	54	54	54	54	54	54	54	54	54	54	53	49

Notes:

1. Tables are based on critical rail span for load combinations as specified in chapter 2 of the ASCE 7-16 and allowable design loads per the 2015 Aluminum Design Manual.
2. Panels are assumed to be in portrait orientation with a maximum length of 67.5"

Structural ENGINUITY INC
Ingenuity in Engineering

SUNMODO®

Max Rail Spans for SunModo SMR200 Rail System

Table 48b

Mean Roof Height: 15 < h ≤ 30 ft
Roof Angle: 27 < θ ≤ 45 degrees
Exposure Category: D
Panel Orientation: Portrait
North/South Support γ_E = 1.5
Roof Type : Hip

Roof Wind Zone	Ground Snow Load (psf)	Wind Speed (mph)												
		90	95	100	105	110	115	120	130	140	150	160	170	180
Zone 1	0	117	111	106	101	96	90	85	77	70	64	59	55	51
	10	117	111	106	101	96	90	85	77	70	64	59	55	51
	20	101	101	101	100	96	90	85	77	70	64	59	55	51
	30	87	87	87	87	87	87	85	77	70	64	59	55	51
	40	77	77	77	77	77	77	77	77	70	64	59	55	51
	50	70	70	70	70	70	70	70	70	70	64	59	55	51
	60	65	65	65	65	65	65	65	65	65	64	59	55	51
	70	60	60	60	60	60	60	60	60	60	60	59	55	51
	80	57	57	57	57	57	57	57	57	57	57	57	55	51
	90	54	54	54	54	54	54	54	54	54	54	54	54	51
Zone 2e	0	118	111	105	100	93	87	82	72	65	59	54	49	45
	10	117	111	105	100	93	87	82	72	65	59	54	49	45
	20	101	101	101	100	93	87	82	72	65	59	54	49	45
	30	87	87	87	87	87	87	82	72	65	59	54	49	45
	40	77	77	77	77	77	77	77	72	65	59	54	49	45
	50	70	70	70	70	70	70	70	70	65	59	54	49	45
	60	65	65	65	65	65	65	65	65	65	59	54	49	45
	70	60	60	60	60	60	60	60	60	60	59	54	49	45
	80	57	57	57	57	57	57	57	57	57	57	54	49	45
	90	54	54	54	54	54	54	54	54	54	54	54	49	45
Zone 2r	0	99	92	86	80	75	71	67	60	54	50	46	42	39
	10	99	92	86	80	75	71	67	60	54	50	46	42	39
	20	99	92	86	80	75	71	67	60	54	50	46	42	39
	30	87	87	86	80	75	71	67	60	54	50	46	42	39
	40	77	77	77	77	75	71	67	60	54	50	46	42	39
	50	70	70	70	70	70	70	67	60	54	50	46	42	39
	60	65	65	65	65	65	65	65	60	54	50	46	42	39
	70	60	60	60	60	60	60	60	60	54	50	46	42	39
	80	57	57	57	57	57	57	57	57	54	50	46	42	39
	90	54	54	54	54	54	54	54	54	54	50	46	42	39
Zone 3	0	103	96	88	82	76	71	66	59	53	48	43	40	37
	10	103	96	88	82	76	71	66	59	53	48	43	40	37
	20	101	96	88	82	76	71	66	59	53	48	43	40	37
	30	87	87	87	82	76	71	66	59	53	48	43	40	37
	40	77	77	77	77	76	71	66	59	53	48	43	40	37
	50	70	70	70	70	70	70	66	59	53	48	43	40	37
	60	65	65	65	65	65	65	65	59	53	48	43	40	37
	70	60	60	60	60	60	60	60	59	53	48	43	40	37
	80	57	57	57	57	57	57	57	57	53	48	43	40	37
	90	54	54	54	54	54	54	54	54	53	48	43	40	37

Notes:

1. Tables are based on critical rail span for load combinations as specified in chapter 2 of the ASCE 7-16 and allowable design loads per the 2015 Aluminum Design Manual.
2. Panels are assumed to be in portrait orientation with a maximum length of 67.5"

Structural ENGINUITY INC
Ingenuity in Engineering

SUNMODO®

Max Rail Spans for SunModo SMR200 Rail System

Table 49a

Mean Roof Height: h ≤ 15 ft
Roof Angle: 0 < θ ≤ 7 degrees
Exposure Category: B
Panel Orientation: Portrait
North/South Support Y_E = 1
Roof Type : Gable

Roof Wind Zone	Ground Snow Load (psf)	Wind Speed (mph)												
		90	95	100	105	110	115	120	130	140	150	160	170	180
Zone 1'	0	111	111	111	111	111	111	111	111	111	111	111	111	111
	10	104	104	104	104	104	104	104	104	104	104	104	104	104
	20	81	81	81	81	81	81	81	81	81	81	81	81	81
	30	79	79	79	79	79	79	79	79	79	79	79	79	79
	40	70	70	70	70	70	70	70	70	70	70	70	70	70
	50	63	63	63	63	63	63	63	63	63	63	63	63	63
	60	58	58	58	58	58	58	58	58	58	58	58	58	58
	70	54	54	54	54	54	54	54	54	54	54	54	54	54
	80	51	51	51	51	51	51	51	51	51	51	51	51	51
	90	48	48	48	48	48	48	48	48	48	48	48	48	48
Zone 1	0	111	111	111	111	111	111	111	111	111	109	103	97	92
	10	104	104	104	104	104	104	104	104	104	104	103	97	92
	20	81	81	81	81	81	81	81	81	81	81	81	81	81
	30	79	79	79	79	79	79	79	79	79	79	79	79	79
	40	70	70	70	70	70	70	70	70	70	70	70	70	70
	50	63	63	63	63	63	63	63	63	63	63	63	63	63
	60	58	58	58	58	58	58	58	58	58	58	58	58	58
	70	54	54	54	54	54	54	54	54	54	54	54	54	54
	80	51	51	51	51	51	51	51	51	51	51	51	51	51
	90	48	48	48	48	48	48	48	48	48	48	48	48	48
Zone 2	0	111	111	111	111	111	111	111	108	101	95	87	80	74
	10	104	104	104	104	104	104	104	104	101	95	87	80	74
	20	81	81	81	81	81	81	81	81	81	81	81	80	74
	30	79	79	79	79	79	79	79	79	79	79	79	79	74
	40	70	70	70	70	70	70	70	70	70	70	70	70	70
	50	63	63	63	63	63	63	63	63	63	63	63	63	63
	60	58	58	58	58	58	58	58	58	58	58	58	58	58
	70	54	54	54	54	54	54	54	54	54	54	54	54	54
	80	51	51	51	51	51	51	51	51	51	51	51	51	51
	90	48	48	48	48	48	48	48	48	48	48	48	48	48
Zone 3	0	111	111	111	111	111	106	102	95	86	78	72	66	61
	10	104	104	104	104	104	104	102	95	86	78	72	66	61
	20	81	81	81	81	81	81	81	81	81	78	72	66	61
	30	79	79	79	79	79	79	79	79	79	78	72	66	61
	40	70	70	70	70	70	70	70	70	70	70	70	66	61
	50	63	63	63	63	63	63	63	63	63	63	63	63	61
	60	58	58	58	58	58	58	58	58	58	58	58	58	58
	70	54	54	54	54	54	54	54	54	54	54	54	54	54
	80	51	51	51	51	51	51	51	51	51	51	51	51	51
	90	48	48	48	48	48	48	48	48	48	48	48	48	48

Notes:

1. Tables are based on critical rail span for load combinations as specified in chapter 2 of the ASCE 7-16 and allowable design loads per the 2015 Aluminum Design Manual.
2. Panels are assumed to be in portrait orientation with a maximum length of 82"

Structural ENGINUITY INC
Ingenuity in Engineering

SUNMODO®

Max Rail Spans for SunModo SMR200 Rail System

Table 49b

Mean Roof Height: h ≤ 15 ft
Roof Angle: 0 < θ ≤ 7 degrees
Exposure Category: B
Panel Orientation: Portrait
North/South Support γ_E = 1.5
Roof Type : Gable

Roof Wind Zone	Ground Snow Load (psf)	Wind Speed (mph)												
		90	95	100	105	110	115	120	130	140	150	160	170	180
Zone 1'	0	111	111	111	111	111	111	111	111	111	111	108	102	97
	10	104	104	104	104	104	104	104	104	104	104	104	102	97
	20	81	81	81	81	81	81	81	81	81	81	81	81	81
	30	79	79	79	79	79	79	79	79	79	79	79	79	79
	40	70	70	70	70	70	70	70	70	70	70	70	70	70
	50	63	63	63	63	63	63	63	63	63	63	63	63	63
	60	58	58	58	58	58	58	58	58	58	58	58	58	58
	70	54	54	54	54	54	54	54	54	54	54	54	54	54
	80	51	51	51	51	51	51	51	51	51	51	51	51	51
	90	48	48	48	48	48	48	48	48	48	48	48	48	48
Zone 1	0	111	111	111	111	111	111	111	103	96	89	82	75	70
	10	104	104	104	104	104	104	104	103	96	89	82	75	70
	20	81	81	81	81	81	81	81	81	81	81	81	75	70
	30	79	79	79	79	79	79	79	79	79	79	79	75	70
	40	70	70	70	70	70	70	70	70	70	70	70	70	70
	50	63	63	63	63	63	63	63	63	63	63	63	63	63
	60	58	58	58	58	58	58	58	58	58	58	58	58	58
	70	54	54	54	54	54	54	54	54	54	54	54	54	54
	80	51	51	51	51	51	51	51	51	51	51	51	51	51
	90	48	48	48	48	48	48	48	48	48	48	48	48	48
Zone 2	0	111	111	111	109	104	100	96	88	79	72	67	62	57
	10	104	104	104	104	104	100	96	88	79	72	67	62	57
	20	81	81	81	81	81	81	81	81	79	72	67	62	57
	30	79	79	79	79	79	79	79	79	79	72	67	62	57
	40	70	70	70	70	70	70	70	70	70	70	67	62	57
	50	63	63	63	63	63	63	63	63	63	63	63	62	57
	60	58	58	58	58	58	58	58	58	58	58	58	58	57
	70	54	54	54	54	54	54	54	54	54	54	54	54	54
	80	51	51	51	51	51	51	51	51	51	51	51	51	51
	90	48	48	48	48	48	48	48	48	48	48	48	48	48
Zone 3	0	111	105	100	96	91	85	80	72	65	59	55	50	47
	10	104	104	100	96	91	85	80	72	65	59	55	50	47
	20	81	81	81	81	81	81	80	72	65	59	55	50	47
	30	79	79	79	79	79	79	79	72	65	59	55	50	47
	40	70	70	70	70	70	70	70	70	65	59	55	50	47
	50	63	63	63	63	63	63	63	63	63	59	55	50	47
	60	58	58	58	58	58	58	58	58	58	58	55	50	47
	70	54	54	54	54	54	54	54	54	54	54	54	50	47
	80	51	51	51	51	51	51	51	51	51	51	51	50	47
	90	48	48	48	48	48	48	48	48	48	48	48	48	47

Notes:

1. Tables are based on critical rail span for load combinations as specified in chapter 2 of the ASCE 7-16 and allowable design loads per the 2015 Aluminum Design Manual.
2. Panels are assumed to be in portrait orientation with a maximum length of 82"

Structural ENGINUITY INC
Ingenuity in Engineering

SUNMODO®

Max Rail Spans for SunModo SMR200 Rail System

Table 50a

Mean Roof Height: h ≤ 15 ft
Roof Angle: 0 < θ ≤ 7 degrees
Exposure Category: C
Panel Orientation: Portrait
North/South Support Y_E = 1
Roof Type : Gable

Roof Wind Zone	Ground Snow Load (psf)	Wind Speed (mph)												
		90	95	100	105	110	115	120	130	140	150	160	170	180
Zone 1'	0	111	111	111	111	111	111	111	111	111	111	108	102	97
	10	104	104	104	104	104	104	104	104	104	104	104	102	97
	20	81	81	81	81	81	81	81	81	81	81	81	81	81
	30	79	79	79	79	79	79	79	79	79	79	79	79	79
	40	70	70	70	70	70	70	70	70	70	70	70	70	70
	50	63	63	63	63	63	63	63	63	63	63	63	63	63
	60	58	58	58	58	58	58	58	58	58	58	58	58	58
	70	54	54	54	54	54	54	54	54	54	54	54	54	54
	80	51	51	51	51	51	51	51	51	51	51	51	51	51
	90	48	48	48	48	48	48	48	48	48	48	48	48	48
Zone 1	0	111	111	111	111	111	111	111	103	97	90	82	75	70
	10	104	104	104	104	104	104	104	103	97	90	82	75	70
	20	81	81	81	81	81	81	81	81	81	81	81	75	70
	30	79	79	79	79	79	79	79	79	79	79	79	75	70
	40	70	70	70	70	70	70	70	70	70	70	70	70	70
	50	63	63	63	63	63	63	63	63	63	63	63	63	63
	60	58	58	58	58	58	58	58	58	58	58	58	58	58
	70	54	54	54	54	54	54	54	54	54	54	54	54	54
	80	51	51	51	51	51	51	51	51	51	51	51	51	51
	90	48	48	48	48	48	48	48	48	48	48	48	48	48
Zone 2	0	111	111	111	109	105	100	97	88	80	73	67	62	57
	10	104	104	104	104	104	100	97	88	80	73	67	62	57
	20	81	81	81	81	81	81	81	81	80	73	67	62	57
	30	79	79	79	79	79	79	79	79	79	73	67	62	57
	40	70	70	70	70	70	70	70	70	70	70	67	62	57
	50	63	63	63	63	63	63	63	63	63	63	63	62	57
	60	58	58	58	58	58	58	58	58	58	58	58	58	57
	70	54	54	54	54	54	54	54	54	54	54	54	54	54
	80	51	51	51	51	51	51	51	51	51	51	51	51	51
	90	48	48	48	48	48	48	48	48	48	48	48	48	48
Zone 3	0	111	105	100	96	91	86	81	72	65	60	55	51	47
	10	104	104	100	96	91	86	81	72	65	60	55	51	47
	20	81	81	81	81	81	81	81	72	65	60	55	51	47
	30	79	79	79	79	79	79	79	72	65	60	55	51	47
	40	70	70	70	70	70	70	70	70	65	60	55	51	47
	50	63	63	63	63	63	63	63	63	63	60	55	51	47
	60	58	58	58	58	58	58	58	58	58	58	55	51	47
	70	54	54	54	54	54	54	54	54	54	54	54	51	47
	80	51	51	51	51	51	51	51	51	51	51	51	51	47
	90	48	48	48	48	48	48	48	48	48	48	48	48	47

Notes:

1. Tables are based on critical rail span for load combinations as specified in chapter 2 of the ASCE 7-16 and allowable design loads per the 2015 Aluminum Design Manual.
2. Panels are assumed to be in portrait orientation with a maximum length of 82"

Structural ENGINUITY INC
Ingenuity in Engineering

SUNMODO®

Max Rail Spans for SunModo SMR200 Rail System

Table 50b

Mean Roof Height: h ≤ 15 ft
Roof Angle: 0 < θ ≤ 7 degrees
Exposure Category: C
Panel Orientation: Portrait
North/South Support γ_E = 1.5
Roof Type : Gable

Roof Wind Zone	Ground Snow Load (psf)	Wind Speed (mph)												
		90	95	100	105	110	115	120	130	140	150	160	170	180
Zone 1'	0	111	111	111	111	111	111	111	108	102	96	89	83	77
	10	104	104	104	104	104	104	104	104	102	96	89	83	77
	20	81	81	81	81	81	81	81	81	81	81	81	81	77
	30	79	79	79	79	79	79	79	79	79	79	79	79	77
	40	70	70	70	70	70	70	70	70	70	70	70	70	70
	50	63	63	63	63	63	63	63	63	63	63	63	63	63
	60	58	58	58	58	58	58	58	58	58	58	58	58	58
	70	54	54	54	54	54	54	54	54	54	54	54	54	54
	80	51	51	51	51	51	51	51	51	51	51	51	51	51
	90	48	48	48	48	48	48	48	48	48	48	48	48	48
Zone 1	0	111	111	109	104	100	96	92	82	75	68	63	58	54
	10	104	104	104	104	100	96	92	82	75	68	63	58	54
	20	81	81	81	81	81	81	81	81	75	68	63	58	54
	30	79	79	79	79	79	79	79	79	75	68	63	58	54
	40	70	70	70	70	70	70	70	70	70	68	63	58	54
	50	63	63	63	63	63	63	63	63	63	63	63	58	54
	60	58	58	58	58	58	58	58	58	58	58	58	58	54
	70	54	54	54	54	54	54	54	54	54	54	54	54	54
	80	51	51	51	51	51	51	51	51	51	51	51	51	51
	90	48	48	48	48	48	48	48	48	48	48	48	48	48
Zone 2	0	104	99	95	90	84	79	75	67	61	56	52	48	44
	10	104	99	95	90	84	79	75	67	61	56	52	48	44
	20	81	81	81	81	81	79	75	67	61	56	52	48	44
	30	79	79	79	79	79	79	75	67	61	56	52	48	44
	40	70	70	70	70	70	70	70	67	61	56	52	48	44
	50	63	63	63	63	63	63	63	63	61	56	52	48	44
	60	58	58	58	58	58	58	58	58	58	56	52	48	44
	70	54	54	54	54	54	54	54	54	54	54	52	48	44
	80	51	51	51	51	51	51	51	51	51	51	51	48	44
	90	48	48	48	48	48	48	48	48	48	48	48	48	44
Zone 3	0	91	84	79	73	69	65	61	55	50	46	42	39	36
	10	91	84	79	73	69	65	61	55	50	46	42	39	36
	20	81	81	79	73	69	65	61	55	50	46	42	39	36
	30	79	79	79	73	69	65	61	55	50	46	42	39	36
	40	70	70	70	70	69	65	61	55	50	46	42	39	36
	50	63	63	63	63	63	63	61	55	50	46	42	39	36
	60	58	58	58	58	58	58	58	55	50	46	42	39	36
	70	54	54	54	54	54	54	54	54	50	46	42	39	36
	80	51	51	51	51	51	51	51	51	50	46	42	39	36
	90	48	48	48	48	48	48	48	48	48	46	42	39	36

Notes:

1. Tables are based on critical rail span for load combinations as specified in chapter 2 of the ASCE 7-16 and allowable design loads per the 2015 Aluminum Design Manual.
2. Panels are assumed to be in portrait orientation with a maximum length of 82"

Structural ENGINUITY INC
Ingenuity in Engineering

SUNMODO®

Max Rail Spans for SunModo SMR200 Rail System

Table 51a

Mean Roof Height: h ≤ 15 ft
Roof Angle: 0 < θ ≤ 7 degrees
Exposure Category: D
Panel Orientation: Portrait
North/South Support γ_E = 1
Roof Type : Gable

Roof Wind Zone	Ground Snow Load (psf)	Wind Speed (mph)												
		90	95	100	105	110	115	120	130	140	150	160	170	180
Zone 1'	0	111	111	111	111	111	111	111	111	111	105	99	94	88
	10	104	104	104	104	104	104	104	104	104	103	99	94	88
	20	81	81	81	81	81	81	81	81	81	81	81	81	81
	30	79	79	79	79	79	79	79	79	79	79	79	79	79
	40	70	70	70	70	70	70	70	70	70	70	70	70	70
	50	63	63	63	63	63	63	63	63	63	63	63	63	63
	60	58	58	58	58	58	58	58	58	58	58	58	58	58
	70	54	54	54	54	54	54	54	54	54	54	54	54	54
	80	51	51	51	51	51	51	51	51	51	51	51	51	51
	90	48	48	48	48	48	48	48	48	48	48	48	48	48
Zone 1	0	111	111	111	111	110	106	102	95	86	79	72	66	62
	10	104	104	104	104	104	104	102	95	86	79	72	66	62
	20	81	81	81	81	81	81	81	81	81	79	72	66	62
	30	79	79	79	79	79	79	79	79	79	79	72	66	62
	40	70	70	70	70	70	70	70	70	70	70	70	66	62
	50	63	63	63	63	63	63	63	63	63	63	63	63	62
	60	58	58	58	58	58	58	58	58	58	58	58	58	58
	70	54	54	54	54	54	54	54	54	54	54	54	54	54
	80	51	51	51	51	51	51	51	51	51	51	51	51	51
	90	48	48	48	48	48	48	48	48	48	48	48	48	48
Zone 2	0	111	110	104	100	96	92	86	77	70	64	59	55	51
	10	104	104	104	100	96	92	86	77	70	64	59	55	51
	20	81	81	81	81	81	81	81	77	70	64	59	55	51
	30	79	79	79	79	79	79	79	77	70	64	59	55	51
	40	70	70	70	70	70	70	70	70	70	64	59	55	51
	50	63	63	63	63	63	63	63	63	63	63	59	55	51
	60	58	58	58	58	58	58	58	58	58	58	58	55	51
	70	54	54	54	54	54	54	54	54	54	54	54	54	51
	80	51	51	51	51	51	51	51	51	51	51	51	51	51
	90	48	48	48	48	48	48	48	48	48	48	48	48	48
Zone 3	0	101	96	91	85	80	75	71	63	58	53	48	45	42
	10	101	96	91	85	80	75	71	63	58	53	48	45	42
	20	81	81	81	81	80	75	71	63	58	53	48	45	42
	30	79	79	79	79	79	75	71	63	58	53	48	45	42
	40	70	70	70	70	70	70	70	63	58	53	48	45	42
	50	63	63	63	63	63	63	63	63	58	53	48	45	42
	60	58	58	58	58	58	58	58	58	58	53	48	45	42
	70	54	54	54	54	54	54	54	54	54	53	48	45	42
	80	51	51	51	51	51	51	51	51	51	51	48	45	42
	90	48	48	48	48	48	48	48	48	48	48	48	45	42

Notes:

1. Tables are based on critical rail span for load combinations as specified in chapter 2 of the ASCE 7-16 and allowable design loads per the 2015 Aluminum Design Manual.
2. Panels are assumed to be in portrait orientation with a maximum length of 82"

Structural ENGINUITY INC
Ingenuity in Engineering

SUNMODO®

Max Rail Spans for SunModo SMR200 Rail System

Table 51b

Mean Roof Height: h ≤ 15 ft
Roof Angle: 0 < θ ≤ 7 degrees
Exposure Category: D
Panel Orientation: Portrait
North/South Support γ_E = 1.5
Roof Type : Gable

Roof Wind Zone	Ground Snow Load (psf)	Wind Speed (mph)												
		90	95	100	105	110	115	120	130	140	150	160	170	180
Zone 1'	0	111	111	111	111	111	111	107	100	94	86	79	73	68
	10	104	104	104	104	104	104	104	100	94	86	79	73	68
	20	81	81	81	81	81	81	81	81	81	81	79	73	68
	30	79	79	79	79	79	79	79	79	79	79	79	73	68
	40	70	70	70	70	70	70	70	70	70	70	70	70	68
	50	63	63	63	63	63	63	63	63	63	63	63	63	63
	60	58	58	58	58	58	58	58	58	58	58	58	58	58
	70	54	54	54	54	54	54	54	54	54	54	54	54	54
	80	51	51	51	51	51	51	51	51	51	51	51	51	51
	90	48	48	48	48	48	48	48	48	48	48	48	48	48
Zone 1	0	110	105	100	96	91	86	81	72	66	60	55	51	48
	10	104	104	100	96	91	86	81	72	66	60	55	51	48
	20	81	81	81	81	81	81	81	72	66	60	55	51	48
	30	79	79	79	79	79	79	79	72	66	60	55	51	48
	40	70	70	70	70	70	70	70	70	66	60	55	51	48
	50	63	63	63	63	63	63	63	63	63	60	55	51	48
	60	58	58	58	58	58	58	58	58	58	58	55	51	48
	70	54	54	54	54	54	54	54	54	54	54	54	51	48
	80	51	51	51	51	51	51	51	51	51	51	51	51	48
	90	48	48	48	48	48	48	48	48	48	48	48	48	48
Zone 2	0	96	90	84	79	74	70	66	59	54	50	46	42	39
	10	96	90	84	79	74	70	66	59	54	50	46	42	39
	20	81	81	81	79	74	70	66	59	54	50	46	42	39
	30	79	79	79	79	74	70	66	59	54	50	46	42	39
	40	70	70	70	70	70	70	66	59	54	50	46	42	39
	50	63	63	63	63	63	63	63	59	54	50	46	42	39
	60	58	58	58	58	58	58	58	58	54	50	46	42	39
	70	54	54	54	54	54	54	54	54	54	50	46	42	39
	80	51	51	51	51	51	51	51	51	51	50	46	42	39
	90	48	48	48	48	48	48	48	48	48	48	46	42	39
Zone 3	0	80	74	69	64	61	57	54	49	44	40	37	35	33
	10	80	74	69	64	61	57	54	49	44	40	37	35	33
	20	80	74	69	64	61	57	54	49	44	40	37	35	33
	30	79	74	69	64	61	57	54	49	44	40	37	35	33
	40	70	70	69	64	61	57	54	49	44	40	37	35	33
	50	63	63	63	63	61	57	54	49	44	40	37	35	33
	60	58	58	58	58	58	57	54	49	44	40	37	35	33
	70	54	54	54	54	54	54	54	49	44	40	37	35	33
	80	51	51	51	51	51	51	51	49	44	40	37	35	33
	90	48	48	48	48	48	48	48	48	44	40	37	35	33

Notes:

1. Tables are based on critical rail span for load combinations as specified in chapter 2 of the ASCE 7-16 and allowable design loads per the 2015 Aluminum Design Manual.
2. Panels are assumed to be in portrait orientation with a maximum length of 82"

Structural ENGINUITY INC
Ingenuity in Engineering

SUNMODO®

Max Rail Spans for SunModo SMR200 Rail System

Table 52a

Mean Roof Height: h ≤ 15 ft
Roof Angle: 7 < θ ≤ 20 degrees
Exposure Category: B
Panel Orientation: Portrait
North/South Support Y_E = 1
Roof Type : Gable

Roof Wind Zone	Ground Snow Load (psf)	Wind Speed (mph)												
		90	95	100	105	110	115	120	130	140	150	160	170	180
Zones 1 & 2e	0	111	111	111	111	111	111	111	111	111	105	97	87	79
	10	97	97	97	97	97	97	97	97	97	97	96	87	79
	20	74	74	74	74	74	74	74	74	74	74	74	74	74
	30	74	74	74	74	74	74	74	74	74	74	74	74	74
	40	66	66	66	66	66	66	66	66	66	66	66	66	66
	50	60	60	60	60	60	60	60	60	60	60	60	60	60
	60	55	55	55	55	55	55	55	55	55	55	55	55	55
	70	51	51	51	51	51	51	51	51	51	51	51	51	51
	80	48	48	48	48	48	48	48	48	48	48	48	48	48
	90	45	45	45	45	45	45	45	45	45	45	45	45	45
Zones 2n, 2r, & 3e	0	111	111	111	111	111	111	110	101	93	84	77	70	65
	10	97	97	97	97	97	97	97	97	93	84	77	70	65
	20	74	74	74	74	74	74	74	74	74	74	74	70	65
	30	74	74	74	74	74	74	74	74	74	74	74	70	65
	40	66	66	66	66	66	66	66	66	66	66	66	66	65
	50	60	60	60	60	60	60	60	60	60	60	60	60	60
	60	55	55	55	55	55	55	55	55	55	55	55	55	55
	70	51	51	51	51	51	51	51	51	51	51	51	51	51
	80	48	48	48	48	48	48	48	48	48	48	48	48	48
	90	45	45	45	45	45	45	45	45	45	45	45	45	45
Zone 3r	0	111	111	111	111	110	105	101	91	82	74	68	62	57
	10	97	97	97	97	97	97	97	91	82	74	68	62	57
	20	74	74	74	74	74	74	74	74	74	74	68	62	57
	30	74	74	74	74	74	74	74	74	74	74	68	62	57
	40	66	66	66	66	66	66	66	66	66	66	66	62	57
	50	60	60	60	60	60	60	60	60	60	60	60	60	57
	60	55	55	55	55	55	55	55	55	55	55	55	55	55
	70	51	51	51	51	51	51	51	51	51	51	51	51	51
	80	48	48	48	48	48	48	48	48	48	48	48	48	48
	90	45	45	45	45	45	45	45	45	45	45	45	45	45

Notes:

1. Tables are based on critical rail span for load combinations as specified in chapter 2 of the ASCE 7-16 and allowable design loads per the 2015 Aluminum Design Manual.
2. Panels are assumed to be in portrait orientation with a maximum length of 82"

Structural ENGINUITY INC
Ingenuity in Engineering

SUNMODO®

Max Rail Spans for SunModo SMR200 Rail System

Table 52b

Mean Roof Height: h ≤ 15 ft
Roof Angle: 7 < θ ≤ 20 degrees
Exposure Category: B
Panel Orientation: Portrait
North/South Support Y_E = 1.5
Roof Type : Gable

Roof Wind Zone	Ground Snow Load (psf)	Wind Speed (mph)												
		90	95	100	105	110	115	120	130	140	150	160	170	180
Zones 1 & 2e	0	111	111	111	111	111	111	107	98	86	76	69	64	60
	10	97	97	97	97	97	97	97	97	86	76	69	64	60
	20	74	74	74	74	74	74	74	74	74	74	69	64	60
	30	74	74	74	74	74	74	74	74	74	74	69	64	60
	40	66	66	66	66	66	66	66	66	66	66	66	64	60
	50	60	60	60	60	60	60	60	60	60	60	60	60	60
	60	55	55	55	55	55	55	55	55	55	55	55	55	55
	70	51	51	51	51	51	51	51	51	51	51	51	51	51
	80	48	48	48	48	48	48	48	48	48	48	48	48	48
	90	45	45	45	45	45	45	45	45	45	45	45	45	45
Zones 2n, 2r, & 3e	0	111	111	107	102	98	92	87	77	69	63	58	53	49
	10	97	97	97	97	97	92	87	77	69	63	58	53	49
	20	74	74	74	74	74	74	74	74	69	63	58	53	49
	30	74	74	74	74	74	74	74	74	69	63	58	53	49
	40	66	66	66	66	66	66	66	66	66	63	58	53	49
	50	60	60	60	60	60	60	60	60	60	60	58	53	49
	60	55	55	55	55	55	55	55	55	55	55	55	53	49
	70	51	51	51	51	51	51	51	51	51	51	51	51	49
	80	48	48	48	48	48	48	48	48	48	48	48	48	48
	90	45	45	45	45	45	45	45	45	45	45	45	45	45
Zone 3r	0	110	104	99	93	87	81	76	68	61	56	51	47	44
	10	97	97	97	93	87	81	76	68	61	56	51	47	44
	20	74	74	74	74	74	74	74	68	61	56	51	47	44
	30	74	74	74	74	74	74	74	68	61	56	51	47	44
	40	66	66	66	66	66	66	66	66	61	56	51	47	44
	50	60	60	60	60	60	60	60	60	60	56	51	47	44
	60	55	55	55	55	55	55	55	55	55	55	51	47	44
	70	51	51	51	51	51	51	51	51	51	51	51	47	44
	80	48	48	48	48	48	48	48	48	48	48	48	47	44
	90	45	45	45	45	45	45	45	45	45	45	45	45	44

Notes:

1. Tables are based on critical rail span for load combinations as specified in chapter 2 of the ASCE 7-16 and allowable design loads per the 2015 Aluminum Design Manual.
2. Panels are assumed to be in portrait orientation with a maximum length of 82"

Structural ENGINUITY INC
Ingenuity in Engineering

SUNMODO®

Max Rail Spans for SunModo SMR200 Rail System

Table 53a

Mean Roof Height: h ≤ 15 ft
Roof Angle: 7 < θ ≤ 20 degrees
Exposure Category: C
Panel Orientation: Portrait
North/South Support Y_E = 1
Roof Type : Gable

Roof Wind Zone	Ground Snow Load (psf)	Wind Speed (mph)												
		90	95	100	105	110	115	120	130	140	150	160	170	180
Zones 1 & 2e	0	111	111	111	111	111	111	108	98	87	77	69	64	60
	10	97	97	97	97	97	97	97	96	87	77	69	64	60
	20	74	74	74	74	74	74	74	74	74	74	69	64	60
	30	74	74	74	74	74	74	74	74	74	74	69	64	60
	40	66	66	66	66	66	66	66	66	66	66	66	64	60
	50	60	60	60	60	60	60	60	60	60	60	60	60	60
	60	55	55	55	55	55	55	55	55	55	55	55	55	55
	70	51	51	51	51	51	51	51	51	51	51	51	51	51
	80	48	48	48	48	48	48	48	48	48	48	48	48	48
	90	45	45	45	45	45	45	45	45	45	45	45	45	45
Zones 2n, 2r, & 3e	0	111	111	108	103	98	93	87	77	70	63	58	53	49
	10	97	97	97	97	97	93	87	77	70	63	58	53	49
	20	74	74	74	74	74	74	74	74	70	63	58	53	49
	30	74	74	74	74	74	74	74	74	70	63	58	53	49
	40	66	66	66	66	66	66	66	66	66	63	58	53	49
	50	60	60	60	60	60	60	60	60	60	60	58	53	49
	60	55	55	55	55	55	55	55	55	55	55	55	53	49
	70	51	51	51	51	51	51	51	51	51	51	51	51	49
	80	48	48	48	48	48	48	48	48	48	48	48	48	48
	90	45	45	45	45	45	45	45	45	45	45	45	45	45
Zone 3r	0	110	104	99	93	87	82	77	68	62	56	51	47	44
	10	97	97	97	93	87	82	77	68	62	56	51	47	44
	20	74	74	74	74	74	74	74	68	62	56	51	47	44
	30	74	74	74	74	74	74	74	68	62	56	51	47	44
	40	66	66	66	66	66	66	66	66	62	56	51	47	44
	50	60	60	60	60	60	60	60	60	60	56	51	47	44
	60	55	55	55	55	55	55	55	55	55	55	51	47	44
	70	51	51	51	51	51	51	51	51	51	51	51	47	44
	80	48	48	48	48	48	48	48	48	48	48	48	47	44
	90	45	45	45	45	45	45	45	45	45	45	45	45	44

Notes:

1. Tables are based on critical rail span for load combinations as specified in chapter 2 of the ASCE 7-16 and allowable design loads per the 2015 Aluminum Design Manual.
2. Panels are assumed to be in portrait orientation with a maximum length of 82"

Structural ENGINUITY INC
Ingenuity in Engineering

SUNMODO®

Max Rail Spans for SunModo SMR200 Rail System

Table 53b

Mean Roof Height: h ≤ 15 ft
Roof Angle: 7 < θ ≤ 20 degrees
Exposure Category: C
Panel Orientation: Portrait
North/South Support γ_E = 1.5
Roof Type : Gable

Roof Wind Zone	Ground Snow Load (psf)	Wind Speed (mph)												
		90	95	100	105	110	115	120	130	140	150	160	170	180
Zones 1 & 2e	0	111	111	105	99	93	86	79	69	64	59	54	51	47
	10	97	97	97	97	93	86	79	69	64	59	54	51	47
	20	74	74	74	74	74	74	74	69	64	59	54	51	47
	30	74	74	74	74	74	74	74	69	64	59	54	51	47
	40	66	66	66	66	66	66	66	66	64	59	54	51	47
	50	60	60	60	60	60	60	60	60	60	59	54	51	47
	60	55	55	55	55	55	55	55	55	55	55	54	51	47
	70	51	51	51	51	51	51	51	51	51	51	51	51	47
	80	48	48	48	48	48	48	48	48	48	48	48	48	47
	90	45	45	45	45	45	45	45	45	45	45	45	45	45
Zones 2n, 2r, & 3e	0	98	91	84	79	74	69	65	58	53	48	44	41	38
	10	97	91	84	79	74	69	65	58	53	48	44	41	38
	20	74	74	74	74	74	69	65	58	53	48	44	41	38
	30	74	74	74	74	74	69	65	58	53	48	44	41	38
	40	66	66	66	66	66	66	65	58	53	48	44	41	38
	50	60	60	60	60	60	60	60	58	53	48	44	41	38
	60	55	55	55	55	55	55	55	55	53	48	44	41	38
	70	51	51	51	51	51	51	51	51	51	48	44	41	38
	80	48	48	48	48	48	48	48	48	48	48	44	41	38
	90	45	45	45	45	45	45	45	45	45	45	44	41	38
Zone 3r	0	87	80	74	69	65	61	58	52	47	43	39	36	34
	10	87	80	74	69	65	61	58	52	47	43	39	36	34
	20	74	74	74	69	65	61	58	52	47	43	39	36	34
	30	74	74	74	69	65	61	58	52	47	43	39	36	34
	40	66	66	66	66	65	61	58	52	47	43	39	36	34
	50	60	60	60	60	60	60	58	52	47	43	39	36	34
	60	55	55	55	55	55	55	55	52	47	43	39	36	34
	70	51	51	51	51	51	51	51	51	47	43	39	36	34
	80	48	48	48	48	48	48	48	48	47	43	39	36	34
	90	45	45	45	45	45	45	45	45	45	43	39	36	34

Notes:

1. Tables are based on critical rail span for load combinations as specified in chapter 2 of the ASCE 7-16 and allowable design loads per the 2015 Aluminum Design Manual.
2. Panels are assumed to be in portrait orientation with a maximum length of 82"

Structural ENGINUITY INC
Ingenuity in Engineering

SUNMODO®

Max Rail Spans for SunModo SMR200 Rail System

Table 54a

Mean Roof Height: h ≤ 15 ft
Roof Angle: 7 < θ ≤ 20 degrees
Exposure Category: D
Panel Orientation: Portrait
North/South Support Y_E = 1
Roof Type : Gable

Roof Wind Zone	Ground Snow Load (psf)	Wind Speed (mph)												
		90	95	100	105	110	115	120	130	140	150	160	170	180
Zones 1 & 2e	0	111	111	111	111	106	101	96	83	73	66	62	57	54
	10	97	97	97	97	97	97	96	83	73	66	62	57	54
	20	74	74	74	74	74	74	74	74	73	66	62	57	54
	30	74	74	74	74	74	74	74	74	73	66	62	57	54
	40	66	66	66	66	66	66	66	66	66	66	62	57	54
	50	60	60	60	60	60	60	60	60	60	60	60	57	54
	60	55	55	55	55	55	55	55	55	55	55	55	55	54
	70	51	51	51	51	51	51	51	51	51	51	51	51	51
	80	48	48	48	48	48	48	48	48	48	48	48	48	48
	90	45	45	45	45	45	45	45	45	45	45	45	45	45
Zones 2n, 2r, & 3e	0	109	103	98	92	86	80	76	68	61	56	51	47	43
	10	97	97	97	92	86	80	76	68	61	56	51	47	43
	20	74	74	74	74	74	74	74	68	61	56	51	47	43
	30	74	74	74	74	74	74	74	68	61	56	51	47	43
	40	66	66	66	66	66	66	66	66	61	56	51	47	43
	50	60	60	60	60	60	60	60	60	60	56	51	47	43
	60	55	55	55	55	55	55	55	55	55	55	51	47	43
	70	51	51	51	51	51	51	51	51	51	51	51	47	43
	80	48	48	48	48	48	48	48	48	48	48	48	47	43
	90	45	45	45	45	45	45	45	45	45	45	45	45	43
Zone 3r	0	100	94	87	81	76	71	67	60	54	49	45	42	39
	10	97	94	87	81	76	71	67	60	54	49	45	42	39
	20	74	74	74	74	74	71	67	60	54	49	45	42	39
	30	74	74	74	74	74	71	67	60	54	49	45	42	39
	40	66	66	66	66	66	66	66	60	54	49	45	42	39
	50	60	60	60	60	60	60	60	60	54	49	45	42	39
	60	55	55	55	55	55	55	55	55	54	49	45	42	39
	70	51	51	51	51	51	51	51	51	51	49	45	42	39
	80	48	48	48	48	48	48	48	48	48	48	45	42	39
	90	45	45	45	45	45	45	45	45	45	45	45	42	39

Notes:

1. Tables are based on critical rail span for load combinations as specified in chapter 2 of the ASCE 7-16 and allowable design loads per the 2015 Aluminum Design Manual.
2. Panels are assumed to be in portrait orientation with a maximum length of 82"

Structural ENGINUITY INC
Ingenuity in Engineering

SUNMODO®

Max Rail Spans for SunModo SMR200 Rail System

Table 54b

Mean Roof Height: h ≤ 15 ft
Roof Angle: 7 < θ ≤ 20 degrees
Exposure Category: D
Panel Orientation: Portrait
North/South Support γ_E = 1.5
Roof Type : Gable

Roof Wind Zone	Ground Snow Load (psf)	Wind Speed (mph)												
		90	95	100	105	110	115	120	130	140	150	160	170	180
Zones 1 & 2e	0	106	100	93	85	78	72	68	62	57	52	48	45	42
	10	97	97	93	85	78	72	68	62	57	52	48	45	42
	20	74	74	74	74	74	72	68	62	57	52	48	45	42
	30	74	74	74	74	74	72	68	62	57	52	48	45	42
	40	66	66	66	66	66	66	66	62	57	52	48	45	42
	50	60	60	60	60	60	60	60	60	57	52	48	45	42
	60	55	55	55	55	55	55	55	55	55	52	48	45	42
	70	51	51	51	51	51	51	51	51	51	51	48	45	42
	80	48	48	48	48	48	48	48	48	48	48	48	45	42
	90	45	45	45	45	45	45	45	45	45	45	45	45	42
Zones 2n, 2r, & 3e	0	86	79	74	69	64	60	57	51	46	42	39	36	34
	10	86	79	74	69	64	60	57	51	46	42	39	36	34
	20	74	74	74	69	64	60	57	51	46	42	39	36	34
	30	74	74	74	69	64	60	57	51	46	42	39	36	34
	40	66	66	66	66	64	60	57	51	46	42	39	36	34
	50	60	60	60	60	60	60	57	51	46	42	39	36	34
	60	55	55	55	55	55	55	55	51	46	42	39	36	34
	70	51	51	51	51	51	51	51	51	46	42	39	36	34
	80	48	48	48	48	48	48	48	48	46	42	39	36	34
	90	45	45	45	45	45	45	45	45	45	42	39	36	34
Zone 3r	0	75	70	65	61	57	54	51	45	41	38	35	32	31
	10	75	70	65	61	57	54	51	45	41	38	35	32	31
	20	74	70	65	61	57	54	51	45	41	38	35	32	31
	30	74	70	65	61	57	54	51	45	41	38	35	32	31
	40	66	66	65	61	57	54	51	45	41	38	35	32	31
	50	60	60	60	60	57	54	51	45	41	38	35	32	31
	60	55	55	55	55	55	54	51	45	41	38	35	32	31
	70	51	51	51	51	51	51	51	45	41	38	35	32	31
	80	48	48	48	48	48	48	48	45	41	38	35	32	31
	90	45	45	45	45	45	45	45	45	41	38	35	32	31

Notes:

1. Tables are based on critical rail span for load combinations as specified in chapter 2 of the ASCE 7-16 and allowable design loads per the 2015 Aluminum Design Manual.
2. Panels are assumed to be in portrait orientation with a maximum length of 82"

Structural ENGINUITY INC
Ingenuity in Engineering

SUNMODO®

Max Rail Spans for SunModo SMR200 Rail System

Table 55a

Mean Roof Height: h ≤ 15 ft
Roof Angle: 20 < θ ≤ 27 degrees
Exposure Category: B
Panel Orientation: Portrait
North/South Support Y_E = 1
Roof Type : Gable

Roof Wind Zone	Ground Snow Load (psf)	Wind Speed (mph)												
		90	95	100	105	110	115	120	130	140	150	160	170	180
Zones 1 & 2e	0	111	111	111	111	111	111	111	111	111	111	105	100	93
	10	106	106	106	106	106	106	106	106	106	106	105	100	93
	20	88	88	88	88	88	88	88	88	88	88	88	88	86
	30	75	75	75	75	75	75	75	75	75	75	75	75	75
	40	66	66	66	66	66	66	66	66	66	66	66	66	66
	50	60	60	60	60	60	60	60	60	60	60	60	60	60
	60	55	55	55	55	55	55	55	55	55	55	55	55	55
	70	52	52	52	52	52	52	52	52	52	52	52	52	52
	80	48	48	48	48	48	48	48	48	48	48	48	48	48
	90	46	46	46	46	46	46	46	46	46	46	46	46	46
Zones 2n, 2r, & 3e	0	111	111	111	111	111	111	111	109	102	93	85	78	72
	10	106	106	106	106	106	106	106	106	102	93	85	78	72
	20	88	88	88	88	88	88	88	88	88	88	85	78	72
	30	75	75	75	75	75	75	75	75	75	75	75	75	72
	40	66	66	66	66	66	66	66	66	66	66	66	66	66
	50	60	60	60	60	60	60	60	60	60	60	60	60	60
	60	55	55	55	55	55	55	55	55	55	55	55	55	55
	70	52	52	52	52	52	52	52	52	52	52	52	52	52
	80	48	48	48	48	48	48	48	48	48	48	48	48	48
	90	46	46	46	46	46	46	46	46	46	46	46	46	46
Zone 3r	0	111	111	111	111	111	111	111	104	96	86	79	72	66
	10	106	106	106	106	106	106	106	104	96	86	79	72	66
	20	88	88	88	88	88	88	88	88	88	86	79	72	66
	30	75	75	75	75	75	75	75	75	75	75	75	72	66
	40	66	66	66	66	66	66	66	66	66	66	66	66	66
	50	60	60	60	60	60	60	60	60	60	60	60	60	60
	60	55	55	55	55	55	55	55	55	55	55	55	55	55
	70	52	52	52	52	52	52	52	52	52	52	52	52	52
	80	48	48	48	48	48	48	48	48	48	48	48	48	48
	90	46	46	46	46	46	46	46	46	46	46	46	46	46

Notes:

1. Tables are based on critical rail span for load combinations as specified in chapter 2 of the ASCE 7-16 and allowable design loads per the 2015 Aluminum Design Manual.
2. Panels are assumed to be in portrait orientation with a maximum length of 82"

Structural ENGINUITY INC
Ingenuity in Engineering

SUNMODO®

Max Rail Spans for SunModo SMR200 Rail System

Table 55b

Mean Roof Height: h ≤ 15 ft
Roof Angle: 20 < θ ≤ 27 degrees
Exposure Category: B
Panel Orientation: Portrait
North/South Support γ_E = 1.5
Roof Type : Gable

Roof Wind Zone	Ground Snow Load (psf)	Wind Speed (mph)												
		90	95	100	105	110	115	120	130	140	150	160	170	180
Zones 1 & 2e	0	111	111	111	111	111	111	111	106	99	90	83	76	71
	10	106	106	106	106	106	106	106	106	99	90	83	76	71
	20	88	88	88	88	88	88	88	88	88	88	83	76	71
	30	75	75	75	75	75	75	75	75	75	75	75	75	71
	40	66	66	66	66	66	66	66	66	66	66	66	66	66
	50	60	60	60	60	60	60	60	60	60	60	60	60	60
	60	55	55	55	55	55	55	55	55	55	55	55	55	55
	70	52	52	52	52	52	52	52	52	52	52	52	52	52
	80	48	48	48	48	48	48	48	48	48	48	48	48	48
	90	46	46	46	46	46	46	46	46	46	46	46	46	46
Zones 2n, 2r, & 3e	0	111	111	111	110	105	101	96	86	77	70	65	59	55
	10	106	106	106	106	105	101	96	86	77	70	65	59	55
	20	88	88	88	88	88	88	88	86	77	70	65	59	55
	30	75	75	75	75	75	75	75	75	75	70	65	59	55
	40	66	66	66	66	66	66	66	66	66	66	65	59	55
	50	60	60	60	60	60	60	60	60	60	60	60	59	55
	60	55	55	55	55	55	55	55	55	55	55	55	55	55
	70	52	52	52	52	52	52	52	52	52	52	52	52	52
	80	48	48	48	48	48	48	48	48	48	48	48	48	48
	90	46	46	46	46	46	46	46	46	46	46	46	46	46
Zone 3r	0	111	111	111	105	101	95	89	79	71	65	59	54	50
	10	106	106	106	105	101	95	89	79	71	65	59	54	50
	20	88	88	88	88	88	88	88	79	71	65	59	54	50
	30	75	75	75	75	75	75	75	75	71	65	59	54	50
	40	66	66	66	66	66	66	66	66	66	65	59	54	50
	50	60	60	60	60	60	60	60	60	60	60	59	54	50
	60	55	55	55	55	55	55	55	55	55	55	55	54	50
	70	52	52	52	52	52	52	52	52	52	52	52	52	50
	80	48	48	48	48	48	48	48	48	48	48	48	48	48
	90	46	46	46	46	46	46	46	46	46	46	46	46	46

Notes:

1. Tables are based on critical rail span for load combinations as specified in chapter 2 of the ASCE 7-16 and allowable design loads per the 2015 Aluminum Design Manual.
2. Panels are assumed to be in portrait orientation with a maximum length of 82"

Structural ENGINUITY INC
Ingenuity in Engineering

SUNMODO®

Max Rail Spans for SunModo SMR200 Rail System

Table 56a

Mean Roof Height: h ≤ 15 ft
Roof Angle: 20 < θ ≤ 27 degrees
Exposure Category: C
Panel Orientation: Portrait
North/South Support Y_E = 1
Roof Type : Gable

Roof Wind Zone	Ground Snow Load (psf)	Wind Speed (mph)												
		90	95	100	105	110	115	120	130	140	150	160	170	180
Zones 1 & 2e	0	111	111	111	111	111	111	111	106	99	90	83	76	71
	10	106	106	106	106	106	106	106	106	99	90	83	76	71
	20	88	88	88	88	88	88	88	88	87	86	83	76	71
	30	75	75	75	75	75	75	75	75	75	75	75	74	71
	40	66	66	66	66	66	66	66	66	66	66	66	66	66
	50	60	60	60	60	60	60	60	60	60	60	60	60	60
	60	55	55	55	55	55	55	55	55	55	55	55	55	55
	70	52	52	52	52	52	52	52	52	52	52	52	52	52
	80	48	48	48	48	48	48	48	48	48	48	48	48	48
	90	46	46	46	46	46	46	46	46	46	46	46	46	46
Zones 2n, 2r, & 3e	0	111	111	111	111	106	101	97	86	78	71	65	60	55
	10	106	106	106	106	106	101	97	86	78	71	65	60	55
	20	88	88	88	88	88	88	88	86	78	71	65	60	55
	30	75	75	75	75	75	75	75	75	75	71	65	60	55
	40	66	66	66	66	66	66	66	66	66	66	65	60	55
	50	60	60	60	60	60	60	60	60	60	60	60	60	55
	60	55	55	55	55	55	55	55	55	55	55	55	55	55
	70	52	52	52	52	52	52	52	52	52	52	52	52	52
	80	48	48	48	48	48	48	48	48	48	48	48	48	48
	90	46	46	46	46	46	46	46	46	46	46	46	46	46
Zone 3r	0	111	111	111	106	101	96	90	80	71	65	59	54	50
	10	106	106	106	106	101	96	90	80	71	65	59	54	50
	20	88	88	88	88	88	88	88	80	71	65	59	54	50
	30	75	75	75	75	75	75	75	75	71	65	59	54	50
	40	66	66	66	66	66	66	66	66	66	65	59	54	50
	50	60	60	60	60	60	60	60	60	60	60	59	54	50
	60	55	55	55	55	55	55	55	55	55	55	55	54	50
	70	52	52	52	52	52	52	52	52	52	52	52	52	50
	80	48	48	48	48	48	48	48	48	48	48	48	48	48
	90	46	46	46	46	46	46	46	46	46	46	46	46	46

Notes:

1. Tables are based on critical rail span for load combinations as specified in chapter 2 of the ASCE 7-16 and allowable design loads per the 2015 Aluminum Design Manual.
2. Panels are assumed to be in portrait orientation with a maximum length of 82"

Structural ENGINUITY INC
Ingenuity in Engineering

SUNMODO®

Max Rail Spans for SunModo SMR200 Rail System

Table 56b

Mean Roof Height: h ≤ 15 ft
Roof Angle: 20 < θ ≤ 27 degrees
Exposure Category: C
Panel Orientation: Portrait
North/South Support γ_E = 1.5
Roof Type : Gable

Roof Wind Zone	Ground Snow Load (psf)	Wind Speed (mph)												
		90	95	100	105	110	115	120	130	140	150	160	170	180
Zones 1 & 2e	0	111	111	111	107	103	99	93	83	76	69	64	60	56
	10	106	106	106	106	103	99	93	83	76	69	64	60	56
	20	88	88	88	88	88	88	88	83	76	69	64	60	56
	30	75	75	75	75	75	75	75	75	75	69	64	60	56
	40	66	66	66	66	66	66	66	66	66	66	64	60	56
	50	60	60	60	60	60	60	60	60	60	60	60	60	56
	60	55	55	55	55	55	55	55	55	55	55	55	55	55
	70	52	52	52	52	52	52	52	52	52	52	52	52	52
	80	48	48	48	48	48	48	48	48	48	48	48	48	48
	90	46	46	46	46	46	46	46	46	46	46	46	46	46
Zones 2n, 2r, & 3e	0	105	100	94	88	82	77	73	65	59	54	49	46	42
	10	105	100	94	88	82	77	73	65	59	54	49	46	42
	20	88	88	88	88	82	77	73	65	59	54	49	46	42
	30	75	75	75	75	75	75	73	65	59	54	49	46	42
	40	66	66	66	66	66	66	66	65	59	54	49	46	42
	50	60	60	60	60	60	60	60	60	59	54	49	46	42
	60	55	55	55	55	55	55	55	55	55	54	49	46	42
	70	52	52	52	52	52	52	52	52	52	52	49	46	42
	80	48	48	48	48	48	48	48	48	48	48	48	46	42
	90	46	46	46	46	46	46	46	46	46	46	46	46	42
Zone 3r	0	101	94	87	81	76	71	67	60	54	49	45	41	38
	10	101	94	87	81	76	71	67	60	54	49	45	41	38
	20	88	88	87	81	76	71	67	60	54	49	45	41	38
	30	75	75	75	75	75	71	67	60	54	49	45	41	38
	40	66	66	66	66	66	66	66	60	54	49	45	41	38
	50	60	60	60	60	60	60	60	60	54	49	45	41	38
	60	55	55	55	55	55	55	55	55	54	49	45	41	38
	70	52	52	52	52	52	52	52	52	52	49	45	41	38
	80	48	48	48	48	48	48	48	48	48	48	45	41	38
	90	46	46	46	46	46	46	46	46	46	46	45	41	38

Notes:

1. Tables are based on critical rail span for load combinations as specified in chapter 2 of the ASCE 7-16 and allowable design loads per the 2015 Aluminum Design Manual.
2. Panels are assumed to be in portrait orientation with a maximum length of 82"

Structural ENGINUITY INC
Ingenuity in Engineering

SUNMODO®

Max Rail Spans for SunModo SMR200 Rail System

Table 57a

Mean Roof Height: h ≤ 15 ft
Roof Angle: 20 < θ ≤ 27 degrees
Exposure Category: D
Panel Orientation: Portrait
North/South Support Y_E = 1
Roof Type : Gable

Roof Wind Zone	Ground Snow Load (psf)	Wind Speed (mph)												
		90	95	100	105	110	115	120	130	140	150	160	170	180
Zones 1 & 2e	0	111	111	111	111	111	109	105	96	87	79	73	68	63
	10	106	106	106	106	106	106	105	96	87	79	73	68	63
	20	88	88	88	88	88	88	88	87	86	79	73	68	63
	30	75	75	75	75	75	75	75	75	75	74	73	68	63
	40	66	66	66	66	66	66	66	66	66	66	66	66	63
	50	60	60	60	60	60	60	60	60	60	60	60	60	60
	60	55	55	55	55	55	55	55	55	55	55	55	55	55
	70	52	52	52	52	52	52	52	52	52	52	52	52	52
	80	48	48	48	48	48	48	48	48	48	48	48	48	48
	90	46	46	46	46	46	46	46	46	46	46	46	46	46
Zones 2n, 2r, & 3e	0	111	111	106	101	95	89	84	75	68	62	57	53	49
	10	106	106	106	101	95	89	84	75	68	62	57	53	49
	20	88	88	88	88	88	88	84	75	68	62	57	53	49
	30	75	75	75	75	75	75	75	75	68	62	57	53	49
	40	66	66	66	66	66	66	66	66	66	62	57	53	49
	50	60	60	60	60	60	60	60	60	60	60	57	53	49
	60	55	55	55	55	55	55	55	55	55	55	55	53	49
	70	52	52	52	52	52	52	52	52	52	52	52	52	49
	80	48	48	48	48	48	48	48	48	48	48	48	48	48
	90	46	46	46	46	46	46	46	46	46	46	46	46	46
Zone 3r	0	111	106	101	95	88	83	78	69	62	57	52	48	44
	10	106	106	101	95	88	83	78	69	62	57	52	48	44
	20	88	88	88	88	88	83	78	69	62	57	52	48	44
	30	75	75	75	75	75	75	75	69	62	57	52	48	44
	40	66	66	66	66	66	66	66	66	62	57	52	48	44
	50	60	60	60	60	60	60	60	60	60	57	52	48	44
	60	55	55	55	55	55	55	55	55	55	55	52	48	44
	70	52	52	52	52	52	52	52	52	52	52	52	48	44
	80	48	48	48	48	48	48	48	48	48	48	48	48	44
	90	46	46	46	46	46	46	46	46	46	46	46	46	44

Notes:

1. Tables are based on critical rail span for load combinations as specified in chapter 2 of the ASCE 7-16 and allowable design loads per the 2015 Aluminum Design Manual.
2. Panels are assumed to be in portrait orientation with a maximum length of 82"

Structural ENGINUITY INC
Ingenuity in Engineering

SUNMODO®

Max Rail Spans for SunModo SMR200 Rail System

Table 57b

Mean Roof Height: h ≤ 15 ft
Roof Angle: 20 < θ ≤ 27 degrees
Exposure Category: D
Panel Orientation: Portrait
North/South Support γ_E = 1.5
Roof Type : Gable

Roof Wind Zone	Ground Snow Load (psf)	Wind Speed (mph)												
		90	95	100	105	110	115	120	130	140	150	160	170	180
Zones 1 & 2e	0	111	108	103	98	92	86	82	73	67	62	57	53	50
	10	106	106	103	98	92	86	82	73	67	62	57	53	50
	20	88	88	88	88	88	86	82	73	67	62	57	53	50
	30	75	75	75	75	75	75	75	73	67	62	57	53	50
	40	66	66	66	66	66	66	66	66	66	62	57	53	50
	50	60	60	60	60	60	60	60	60	60	60	57	53	50
	60	55	55	55	55	55	55	55	55	55	55	55	53	50
	70	52	52	52	52	52	52	52	52	52	52	52	52	50
	80	48	48	48	48	48	48	48	48	48	48	48	48	48
	90	46	46	46	46	46	46	46	46	46	46	46	46	46
Zones 2n, 2r, & 3e	0	95	88	82	77	72	68	64	57	52	47	44	40	37
	10	95	88	82	77	72	68	64	57	52	47	44	40	37
	20	88	88	82	77	72	68	64	57	52	47	44	40	37
	30	75	75	75	75	72	68	64	57	52	47	44	40	37
	40	66	66	66	66	66	66	64	57	52	47	44	40	37
	50	60	60	60	60	60	60	60	57	52	47	44	40	37
	60	55	55	55	55	55	55	55	55	52	47	44	40	37
	70	52	52	52	52	52	52	52	52	52	47	44	40	37
	80	48	48	48	48	48	48	48	48	48	47	44	40	37
	90	46	46	46	46	46	46	46	46	46	46	44	40	37
Zone 3r	0	88	81	75	70	66	62	58	52	47	43	39	36	34
	10	88	81	75	70	66	62	58	52	47	43	39	36	34
	20	88	81	75	70	66	62	58	52	47	43	39	36	34
	30	75	75	75	70	66	62	58	52	47	43	39	36	34
	40	66	66	66	66	66	62	58	52	47	43	39	36	34
	50	60	60	60	60	60	60	58	52	47	43	39	36	34
	60	55	55	55	55	55	55	55	52	47	43	39	36	34
	70	52	52	52	52	52	52	52	52	47	43	39	36	34
	80	48	48	48	48	48	48	48	48	47	43	39	36	34
	90	46	46	46	46	46	46	46	46	46	43	39	36	34

Notes:

1. Tables are based on critical rail span for load combinations as specified in chapter 2 of the ASCE 7-16 and allowable design loads per the 2015 Aluminum Design Manual.
2. Panels are assumed to be in portrait orientation with a maximum length of 82"

Structural ENGINUITY INC
Ingenuity in Engineering

SUNMODO®

Max Rail Spans for SunModo SMR200 Rail System

Table 58a

Mean Roof Height: h ≤ 15 ft
Roof Angle: 27 < θ ≤ 45 degrees
Exposure Category: B
Panel Orientation: Portrait
North/South Support $Y_E = 1$
Roof Type : Gable

Roof Wind Zone	Ground Snow Load (psf)	Wind Speed (mph)												
		90	95	100	105	110	115	120	130	140	150	160	170	180
Zones 1, 2e, & 2r	0	111	111	111	111	111	111	111	111	111	111	107	99	91
	10	107	107	107	107	107	107	107	106	104	102	99	97	91
	20	92	92	92	92	92	92	92	90	89	87	86	84	82
	30	79	79	79	79	79	79	79	79	79	78	77	75	74
	40	70	70	70	70	70	70	70	70	70	70	70	69	68
	50	64	64	64	64	64	64	64	64	64	64	64	64	63
	60	59	59	59	59	59	59	59	59	59	59	59	59	59
	70	55	55	55	55	55	55	55	55	55	55	55	55	55
	80	52	52	52	52	52	52	52	52	52	52	52	52	52
	90	49	49	49	49	49	49	49	49	49	49	49	49	49
Zones 2n & 3r	0	111	111	111	111	111	111	111	111	110	102	94	87	81
	10	107	107	107	107	107	107	107	106	104	102	94	87	81
	20	92	92	92	92	92	92	92	90	89	87	86	84	81
	30	79	79	79	79	79	79	79	79	79	78	77	75	74
	40	70	70	70	70	70	70	70	70	70	70	70	69	68
	50	64	64	64	64	64	64	64	64	64	64	64	64	63
	60	59	59	59	59	59	59	59	59	59	59	59	59	59
	70	55	55	55	55	55	55	55	55	55	55	55	55	55
	80	52	52	52	52	52	52	52	52	52	52	52	52	52
	90	49	49	49	49	49	49	49	49	49	49	49	49	49
Zone 3e	0	111	111	111	111	111	111	111	107	97	89	82	76	70
	10	107	107	107	107	107	107	107	106	97	89	82	76	70
	20	92	92	92	92	92	92	92	90	89	87	82	76	70
	30	79	79	79	79	79	79	79	79	79	78	77	75	70
	40	70	70	70	70	70	70	70	70	70	70	70	69	68
	50	64	64	64	64	64	64	64	64	64	64	64	64	63
	60	59	59	59	59	59	59	59	59	59	59	59	59	59
	70	55	55	55	55	55	55	55	55	55	55	55	55	55
	80	52	52	52	52	52	52	52	52	52	52	52	52	52
	90	49	49	49	49	49	49	49	49	49	49	49	49	49

Notes:

1. Tables are based on critical rail span for load combinations as specified in chapter 2 of the ASCE 7-16 and allowable design loads per the 2015 Aluminum Design Manual.
2. Panels are assumed to be in portrait orientation with a maximum length of 82"

Structural ENGINUITY INC
Ingenuity in Engineering

SUNMODO®

Max Rail Spans for SunModo SMR200 Rail System

Table 58b

Mean Roof Height: h ≤ 15 ft
Roof Angle: 27 < θ ≤ 45 degrees
Exposure Category: B
Panel Orientation: Portrait
North/South Support Y_E = 1.5
Roof Type : Gable

Roof Wind Zone	Ground Snow Load (psf)	Wind Speed (mph)												
		90	95	100	105	110	115	120	130	140	150	160	170	180
Zones 1, 2e, & 2r	0	111	111	111	111	111	111	111	107	98	89	81	75	69
	10	107	107	107	107	107	107	107	106	98	89	81	75	69
	20	92	92	92	92	92	92	92	90	89	87	81	75	69
	30	79	79	79	79	79	79	79	79	79	78	77	75	69
	40	70	70	70	70	70	70	70	70	70	70	70	69	68
	50	64	64	64	64	64	64	64	64	64	64	64	64	63
	60	59	59	59	59	59	59	59	59	59	59	59	59	59
	70	55	55	55	55	55	55	55	55	55	55	55	55	55
	80	52	52	52	52	52	52	52	52	52	52	52	52	52
	90	49	49	49	49	49	49	49	49	49	49	49	49	49
Zones 2n & 3r	0	111	111	111	111	111	109	105	94	86	79	72	67	62
	10	107	107	107	107	107	107	105	94	86	79	72	67	62
	20	92	92	92	92	92	92	92	90	86	79	72	67	62
	30	79	79	79	79	79	79	79	79	79	78	72	67	62
	40	70	70	70	70	70	70	70	70	70	70	70	67	62
	50	64	64	64	64	64	64	64	64	64	64	64	64	62
	60	59	59	59	59	59	59	59	59	59	59	59	59	59
	70	55	55	55	55	55	55	55	55	55	55	55	55	55
	80	52	52	52	52	52	52	52	52	52	52	52	52	52
	90	49	49	49	49	49	49	49	49	49	49	49	49	49
Zone 3e	0	111	111	111	108	102	97	91	82	75	69	63	58	54
	10	107	107	107	107	102	97	91	82	75	69	63	58	54
	20	92	92	92	92	92	92	91	82	75	69	63	58	54
	30	79	79	79	79	79	79	79	79	75	69	63	58	54
	40	70	70	70	70	70	70	70	70	70	69	63	58	54
	50	64	64	64	64	64	64	64	64	64	64	63	58	54
	60	59	59	59	59	59	59	59	59	59	59	59	58	54
	70	55	55	55	55	55	55	55	55	55	55	55	55	54
	80	52	52	52	52	52	52	52	52	52	52	52	52	52
	90	49	49	49	49	49	49	49	49	49	49	49	49	49

Notes:

1. Tables are based on critical rail span for load combinations as specified in chapter 2 of the ASCE 7-16 and allowable design loads per the 2015 Aluminum Design Manual.
2. Panels are assumed to be in portrait orientation with a maximum length of 82"

Structural ENGINUITY INC
Ingenuity in Engineering

SUNMODO®

Max Rail Spans for SunModo SMR200 Rail System

Table 59a

Mean Roof Height: h ≤ 15 ft
Roof Angle: 27 < θ ≤ 45 degrees
Exposure Category: C
Panel Orientation: Portrait
North/South Support Y_E = 1
Roof Type : Gable

Roof Wind Zone	Ground Snow Load (psf)	Wind Speed (mph)												
		90	95	100	105	110	115	120	130	140	150	160	170	180
Zones 1, 2e, & 2r	0	111	111	111	111	111	111	111	108	98	89	82	75	69
	10	107	107	107	107	105	104	102	99	96	89	82	75	69
	20	92	92	91	91	90	89	88	86	84	82	80	75	69
	30	79	79	79	79	79	79	78	77	75	74	72	70	69
	40	70	70	70	70	70	70	70	70	69	68	66	65	64
	50	64	64	64	64	64	64	64	64	64	63	62	61	60
	60	59	59	59	59	59	59	59	59	59	59	58	57	56
	70	55	55	55	55	55	55	55	55	55	55	55	54	53
	80	52	52	52	52	52	52	52	52	52	52	52	52	51
	90	49	49	49	49	49	49	49	49	49	49	49	49	49
Zones 2n & 3r	0	111	111	111	111	111	109	105	95	86	79	73	67	62
	10	107	107	107	107	105	104	102	95	86	79	73	67	62
	20	92	92	91	91	90	89	88	86	84	79	73	67	62
	30	79	79	79	79	79	79	78	77	75	74	72	67	62
	40	70	70	70	70	70	70	70	70	69	68	66	65	62
	50	64	64	64	64	64	64	64	64	64	63	62	61	60
	60	59	59	59	59	59	59	59	59	59	59	58	57	56
	70	55	55	55	55	55	55	55	55	55	55	55	54	53
	80	52	52	52	52	52	52	52	52	52	52	52	52	51
	90	49	49	49	49	49	49	49	49	49	49	49	49	49
Zone 3e	0	111	111	111	108	103	97	92	83	75	69	63	59	54
	10	107	107	107	107	103	97	92	83	75	69	63	59	54
	20	92	92	91	91	90	89	88	83	75	69	63	59	54
	30	79	79	79	79	79	79	78	77	75	69	63	59	54
	40	70	70	70	70	70	70	70	70	69	68	63	59	54
	50	64	64	64	64	64	64	64	64	64	63	62	59	54
	60	59	59	59	59	59	59	59	59	59	59	58	57	54
	70	55	55	55	55	55	55	55	55	55	55	55	54	53
	80	52	52	52	52	52	52	52	52	52	52	52	52	51
	90	49	49	49	49	49	49	49	49	49	49	49	49	49

Notes:

1. Tables are based on critical rail span for load combinations as specified in chapter 2 of the ASCE 7-16 and allowable design loads per the 2015 Aluminum Design Manual.
2. Panels are assumed to be in portrait orientation with a maximum length of 82"

Structural ENGINUITY INC
Ingenuity in Engineering

SUNMODO®

Max Rail Spans for SunModo SMR200 Rail System

Table 59b

Mean Roof Height: h ≤ 15 ft
Roof Angle: 27 < θ ≤ 45 degrees
Exposure Category: C
Panel Orientation: Portrait
North/South Support γ_E = 1.5
Roof Type : Gable

Roof Wind Zone	Ground Snow Load (psf)	Wind Speed (mph)												
		90	95	100	105	110	115	120	130	140	150	160	170	180
Zones 1, 2e, & 2r	0	111	111	111	109	104	97	92	82	74	67	62	57	53
	10	107	107	107	107	104	97	92	82	74	67	62	57	53
	20	92	92	91	91	90	89	88	82	74	67	62	57	53
	30	79	79	79	79	79	79	78	77	74	67	62	57	53
	40	70	70	70	70	70	70	70	70	69	67	62	57	53
	50	64	64	64	64	64	64	64	64	64	63	62	57	53
	60	59	59	59	59	59	59	59	59	59	59	58	57	53
	70	55	55	55	55	55	55	55	55	55	55	55	54	53
	80	52	52	52	52	52	52	52	52	52	52	52	52	51
	90	49	49	49	49	49	49	49	49	49	49	49	49	49
Zones 2n & 3r	0	111	108	102	96	91	86	81	73	66	61	56	52	48
	10	107	107	102	96	91	86	81	73	66	61	56	52	48
	20	92	92	91	91	90	86	81	73	66	61	56	52	48
	30	79	79	79	79	79	79	78	73	66	61	56	52	48
	40	70	70	70	70	70	70	70	70	66	61	56	52	48
	50	64	64	64	64	64	64	64	64	64	61	56	52	48
	60	59	59	59	59	59	59	59	59	59	59	56	52	48
	70	55	55	55	55	55	55	55	55	55	55	55	52	48
	80	52	52	52	52	52	52	52	52	52	52	52	52	48
	90	49	49	49	49	49	49	49	49	49	49	49	49	48
Zone 3e	0	103	96	89	84	79	75	71	64	58	53	49	45	42
	10	103	96	89	84	79	75	71	64	58	53	49	45	42
	20	92	92	89	84	79	75	71	64	58	53	49	45	42
	30	79	79	79	79	79	75	71	64	58	53	49	45	42
	40	70	70	70	70	70	70	70	64	58	53	49	45	42
	50	64	64	64	64	64	64	64	64	58	53	49	45	42
	60	59	59	59	59	59	59	59	59	58	53	49	45	42
	70	55	55	55	55	55	55	55	55	55	53	49	45	42
	80	52	52	52	52	52	52	52	52	52	52	49	45	42
	90	49	49	49	49	49	49	49	49	49	49	49	45	42

Notes:

1. Tables are based on critical rail span for load combinations as specified in chapter 2 of the ASCE 7-16 and allowable design loads per the 2015 Aluminum Design Manual.
2. Panels are assumed to be in portrait orientation with a maximum length of 82"

Structural ENGINUITY INC
Ingenuity in Engineering

SUNMODO®

Max Rail Spans for SunModo SMR200 Rail System

Table 60a

Mean Roof Height: h ≤ 15 ft
Roof Angle: 27 < θ ≤ 45 degrees
Exposure Category: D
Panel Orientation: Portrait
North/South Support Y_E = 1
Roof Type : Gable

Roof Wind Zone	Ground Snow Load (psf)	Wind Speed (mph)												
		90	95	100	105	110	115	120	130	140	150	160	170	180
Zones 1, 2e, & 2r	0	111	111	111	111	111	111	106	95	86	78	71	66	61
	10	107	107	105	104	102	100	99	95	86	78	71	66	61
	20	92	91	90	89	88	86	85	83	81	78	71	66	61
	30	79	79	79	79	78	77	76	75	73	71	69	66	61
	40	70	70	70	70	70	70	70	68	67	66	64	63	61
	50	64	64	64	64	64	64	64	64	62	61	60	59	58
	60	59	59	59	59	59	59	59	59	59	58	57	56	55
	70	55	55	55	55	55	55	55	55	55	55	54	53	52
	80	52	52	52	52	52	52	52	52	52	52	51	51	50
	90	49	49	49	49	49	49	49	49	49	49	49	48	48
Zones 2n & 3r	0	111	111	111	109	104	98	93	84	76	70	64	59	55
	10	107	107	105	104	102	98	93	84	76	70	64	59	55
	20	92	91	90	89	88	86	85	83	76	70	64	59	55
	30	79	79	79	79	78	77	76	75	73	70	64	59	55
	40	70	70	70	70	70	70	70	68	67	66	64	59	55
	50	64	64	64	64	64	64	64	64	62	61	60	59	55
	60	59	59	59	59	59	59	59	59	59	58	57	56	55
	70	55	55	55	55	55	55	55	55	55	55	54	53	52
	80	52	52	52	52	52	52	52	52	52	52	51	51	50
	90	49	49	49	49	49	49	49	49	49	49	49	48	48
Zone 3e	0	111	108	103	96	91	86	81	73	66	61	56	52	48
	10	107	107	103	96	91	86	81	73	66	61	56	52	48
	20	92	91	90	89	88	86	81	73	66	61	56	52	48
	30	79	79	79	79	78	77	76	73	66	61	56	52	48
	40	70	70	70	70	70	70	70	68	66	61	56	52	48
	50	64	64	64	64	64	64	64	64	62	61	56	52	48
	60	59	59	59	59	59	59	59	59	59	58	56	52	48
	70	55	55	55	55	55	55	55	55	55	55	54	52	48
	80	52	52	52	52	52	52	52	52	52	52	51	51	48
	90	49	49	49	49	49	49	49	49	49	49	49	48	48

Notes:

1. Tables are based on critical rail span for load combinations as specified in chapter 2 of the ASCE 7-16 and allowable design loads per the 2015 Aluminum Design Manual.
2. Panels are assumed to be in portrait orientation with a maximum length of 82"

Structural ENGINUITY INC
Ingenuity in Engineering

SUNMODO®

Max Rail Spans for SunModo SMR200 Rail System

Table 60b

Mean Roof Height: h ≤ 15 ft
Roof Angle: 27 < θ ≤ 45 degrees
Exposure Category: D
Panel Orientation: Portrait
North/South Support γ_E = 1.5
Roof Type : Gable

Roof Wind Zone	Ground Snow Load (psf)	Wind Speed (mph)												
		90	95	100	105	110	115	120	130	140	150	160	170	180
Zones 1, 2e, & 2r	0	111	109	104	97	91	85	80	72	65	59	54	50	46
	10	107	107	104	97	91	85	80	72	65	59	54	50	46
	20	92	91	90	89	88	85	80	72	65	59	54	50	46
	30	79	79	79	79	78	77	76	72	65	59	54	50	46
	40	70	70	70	70	70	70	70	68	65	59	54	50	46
	50	64	64	64	64	64	64	64	64	62	59	54	50	46
	60	59	59	59	59	59	59	59	59	59	58	54	50	46
	70	55	55	55	55	55	55	55	55	55	55	54	50	46
	80	52	52	52	52	52	52	52	52	52	52	51	50	46
	90	49	49	49	49	49	49	49	49	49	49	49	48	46
Zones 2n & 3r	0	104	97	90	85	80	76	72	65	59	54	50	46	43
	10	104	97	90	85	80	76	72	65	59	54	50	46	43
	20	92	91	90	85	80	76	72	65	59	54	50	46	43
	30	79	79	79	79	78	76	72	65	59	54	50	46	43
	40	70	70	70	70	70	70	70	65	59	54	50	46	43
	50	64	64	64	64	64	64	64	64	59	54	50	46	43
	60	59	59	59	59	59	59	59	59	59	54	50	46	43
	70	55	55	55	55	55	55	55	55	55	54	50	46	43
	80	52	52	52	52	52	52	52	52	52	52	50	46	43
	90	49	49	49	49	49	49	49	49	49	49	49	46	43
Zone 3e	0	91	84	79	74	70	66	62	56	51	47	43	40	37
	10	91	84	79	74	70	66	62	56	51	47	43	40	37
	20	91	84	79	74	70	66	62	56	51	47	43	40	37
	30	79	79	79	74	70	66	62	56	51	47	43	40	37
	40	70	70	70	70	70	66	62	56	51	47	43	40	37
	50	64	64	64	64	64	64	62	56	51	47	43	40	37
	60	59	59	59	59	59	59	59	56	51	47	43	40	37
	70	55	55	55	55	55	55	55	55	51	47	43	40	37
	80	52	52	52	52	52	52	52	52	51	47	43	40	37
	90	49	49	49	49	49	49	49	49	49	47	43	40	37

Notes:

1. Tables are based on critical rail span for load combinations as specified in chapter 2 of the ASCE 7-16 and allowable design loads per the 2015 Aluminum Design Manual.
2. Panels are assumed to be in portrait orientation with a maximum length of 82"

Structural ENGINUITY INC
Ingenuity in Engineering

SUNMODO®

Max Rail Spans for SunModo SMR200 Rail System

Table 61a

Mean Roof Height: h ≤ 15 ft
Roof Angle: 7 < θ ≤ 20 degrees
Exposure Category: B

Panel Orientation: Portrait
North/South Support Y_E = 1
Roof Type : Hip h/B = ≥ 0.8

Roof Wind Zone	Ground Snow Load (psf)	Wind Speed (mph)												
		90	95	100	105	110	115	120	130	140	150	160	170	180
Zone 1	0	111	111	111	111	111	111	111	111	111	106	99	91	84
	10	97	97	97	97	97	97	97	97	97	96	94	91	84
	20	74	74	74	74	74	74	74	74	74	74	74	74	74
	30	74	74	74	74	74	74	74	74	74	74	74	74	74
	40	66	66	66	66	66	66	66	66	66	66	66	66	66
	50	60	60	60	60	60	60	60	60	60	60	60	60	60
	60	55	55	55	55	55	55	55	55	55	55	55	55	55
	70	51	51	51	51	51	51	51	51	51	51	51	51	51
	80	48	48	48	48	48	48	48	48	48	48	48	48	48
	90	45	45	45	45	45	45	45	45	45	45	45	45	45
Zone 2r	0	111	111	111	111	111	111	111	109	101	94	86	79	73
	10	97	97	97	97	97	97	97	97	97	94	86	79	73
	20	74	74	74	74	74	74	74	74	74	74	74	74	73
	30	74	74	74	74	74	74	74	74	74	74	74	74	73
	40	66	66	66	66	66	66	66	66	66	66	66	66	66
	50	60	60	60	60	60	60	60	60	60	60	60	60	60
	60	55	55	55	55	55	55	55	55	55	55	55	55	55
	70	51	51	51	51	51	51	51	51	51	51	51	51	51
	80	48	48	48	48	48	48	48	48	48	48	48	48	48
	90	45	45	45	45	45	45	45	45	45	45	45	45	45
Zones 2e & 3	0	111	111	111	111	111	111	111	105	98	89	82	75	70
	10	97	97	97	97	97	97	97	97	97	89	82	75	70
	20	74	74	74	74	74	74	74	74	74	74	74	74	70
	30	74	74	74	74	74	74	74	74	74	74	74	74	70
	40	66	66	66	66	66	66	66	66	66	66	66	66	66
	50	60	60	60	60	60	60	60	60	60	60	60	60	60
	60	55	55	55	55	55	55	55	55	55	55	55	55	55
	70	51	51	51	51	51	51	51	51	51	51	51	51	51
	80	48	48	48	48	48	48	48	48	48	48	48	48	48
	90	45	45	45	45	45	45	45	45	45	45	45	45	45

Notes:

1. Tables are based on critical rail span for load combinations as specified in chapter 2 of the ASCE 7-16 and allowable design loads per the 2015 Aluminum Design Manual.
2. Panels are assumed to be in portrait orientation with a maximum length of 82"

Structural ENGINUITY INC
Ingenuity in Engineering

SUNMODO®

Max Rail Spans for SunModo SMR200 Rail System

Table 61b

Mean Roof Height: h ≤ 15 ft
Roof Angle: 7 < θ ≤ 20 degrees
Exposure Category: B
Panel Orientation: Portrait
North/South Support Y_E = 1.5
Roof Type : Hip h/B = ≥ 0.8

Roof Wind Zone	Ground Snow Load (psf)	Wind Speed (mph)												
		90	95	100	105	110	115	120	130	140	150	160	170	180
Zone 1	0	111	111	111	111	111	111	108	99	90	81	74	68	64
	10	97	97	97	97	97	97	97	97	90	81	74	68	64
	20	74	74	74	74	74	74	74	74	74	74	74	68	64
	30	74	74	74	74	74	74	74	74	74	74	74	68	64
	40	66	66	66	66	66	66	66	66	66	66	66	66	64
	50	60	60	60	60	60	60	60	60	60	60	60	60	60
	60	55	55	55	55	55	55	55	55	55	55	55	55	55
	70	51	51	51	51	51	51	51	51	51	51	51	51	51
	80	48	48	48	48	48	48	48	48	48	48	48	48	48
	90	45	45	45	45	45	45	45	45	45	45	45	45	45
Zone 2r	0	111	111	111	110	105	101	97	87	78	71	66	60	56
	10	97	97	97	97	97	97	97	87	78	71	66	60	56
	20	74	74	74	74	74	74	74	74	74	71	66	60	56
	30	74	74	74	74	74	74	74	74	74	71	66	60	56
	40	66	66	66	66	66	66	66	66	66	66	66	60	56
	50	60	60	60	60	60	60	60	60	60	60	60	60	56
	60	55	55	55	55	55	55	55	55	55	55	55	55	55
	70	51	51	51	51	51	51	51	51	51	51	51	51	51
	80	48	48	48	48	48	48	48	48	48	48	48	48	48
	90	45	45	45	45	45	45	45	45	45	45	45	45	45
Zones 2e & 3	0	111	111	111	106	101	97	92	82	74	68	62	57	53
	10	97	97	97	97	97	97	92	82	74	68	62	57	53
	20	74	74	74	74	74	74	74	74	74	68	62	57	53
	30	74	74	74	74	74	74	74	74	74	68	62	57	53
	40	66	66	66	66	66	66	66	66	66	66	62	57	53
	50	60	60	60	60	60	60	60	60	60	60	60	57	53
	60	55	55	55	55	55	55	55	55	55	55	55	55	53
	70	51	51	51	51	51	51	51	51	51	51	51	51	51
	80	48	48	48	48	48	48	48	48	48	48	48	48	48
	90	45	45	45	45	45	45	45	45	45	45	45	45	45

Notes:

1. Tables are based on critical rail span for load combinations as specified in chapter 2 of the ASCE 7-16 and allowable design loads per the 2015 Aluminum Design Manual.
2. Panels are assumed to be in portrait orientation with a maximum length of 82"

Structural ENGINUITY INC
Ingenuity in Engineering

SUNMODO®

Max Rail Spans for SunModo SMR200 Rail System

Table 62a

Mean Roof Height: h ≤ 15 ft
Roof Angle: 7 < θ ≤ 20 degrees
Exposure Category: C
Panel Orientation: Portrait
North/South Support Y_E = 1
Roof Type : Hip h/B = ≥ 0.8

Roof Wind Zone	Ground Snow Load (psf)	Wind Speed (mph)												
		90	95	100	105	110	115	120	130	140	150	160	170	180
Zone 1	0	111	111	111	111	111	111	108	100	91	82	74	68	64
	10	97	97	97	97	97	97	96	94	91	82	74	68	64
	20	74	74	74	74	74	74	74	74	74	74	73	68	64
	30	74	74	74	74	74	74	74	74	74	74	73	68	64
	40	66	66	66	66	66	66	66	66	66	66	66	65	64
	50	60	60	60	60	60	60	60	60	60	60	60	60	59
	60	55	55	55	55	55	55	55	55	55	55	55	55	55
	70	51	51	51	51	51	51	51	51	51	51	51	51	51
	80	48	48	48	48	48	48	48	48	48	48	48	48	48
	90	45	45	45	45	45	45	45	45	45	45	45	45	45
Zone 2r	0	111	111	111	110	105	101	97	87	79	72	66	61	56
	10	97	97	97	97	97	97	96	87	79	72	66	61	56
	20	74	74	74	74	74	74	74	74	74	72	66	61	56
	30	74	74	74	74	74	74	74	74	74	72	66	61	56
	40	66	66	66	66	66	66	66	66	66	66	66	61	56
	50	60	60	60	60	60	60	60	60	60	60	60	60	56
	60	55	55	55	55	55	55	55	55	55	55	55	55	55
	70	51	51	51	51	51	51	51	51	51	51	51	51	51
	80	48	48	48	48	48	48	48	48	48	48	48	48	48
	90	45	45	45	45	45	45	45	45	45	45	45	45	45
Zones 2e & 3	0	111	111	111	106	102	97	92	83	75	68	62	58	54
	10	97	97	97	97	97	97	92	83	75	68	62	58	54
	20	74	74	74	74	74	74	74	74	74	68	62	58	54
	30	74	74	74	74	74	74	74	74	74	68	62	58	54
	40	66	66	66	66	66	66	66	66	66	66	62	58	54
	50	60	60	60	60	60	60	60	60	60	60	60	58	54
	60	55	55	55	55	55	55	55	55	55	55	55	55	54
	70	51	51	51	51	51	51	51	51	51	51	51	51	51
	80	48	48	48	48	48	48	48	48	48	48	48	48	48
	90	45	45	45	45	45	45	45	45	45	45	45	45	45

Notes:

1. Tables are based on critical rail span for load combinations as specified in chapter 2 of the ASCE 7-16 and allowable design loads per the 2015 Aluminum Design Manual.
2. Panels are assumed to be in portrait orientation with a maximum length of 82"

Structural ENGINUITY INC
Ingenuity in Engineering

SUNMODO®

Max Rail Spans for SunModo SMR200 Rail System

Table 62b

Mean Roof Height: h ≤ 15 ft
Roof Angle: 7 < θ ≤ 20 degrees
Exposure Category: C

Panel Orientation: Portrait
North/South Support γ_E = 1.5
Roof Type : Hip h/B = ≥ 0.8

Roof Wind Zone	Ground Snow Load (psf)	Wind Speed (mph)												
		90	95	100	105	110	115	120	130	140	150	160	170	180
Zone 1	0	111	111	106	101	96	90	84	75	68	62	58	54	50
	10	97	97	97	97	96	90	84	75	68	62	58	54	50
	20	74	74	74	74	74	74	74	74	68	62	58	54	50
	30	74	74	74	74	74	74	74	74	68	62	58	54	50
	40	66	66	66	66	66	66	66	66	66	62	58	54	50
	50	60	60	60	60	60	60	60	60	60	60	58	54	50
	60	55	55	55	55	55	55	55	55	55	55	55	54	50
	70	51	51	51	51	51	51	51	51	51	51	51	51	50
	80	48	48	48	48	48	48	48	48	48	48	48	48	48
	90	45	45	45	45	45	45	45	45	45	45	45	45	45
Zone 2r	0	105	100	95	88	83	78	74	66	60	55	50	47	43
	10	97	97	95	88	83	78	74	66	60	55	50	47	43
	20	74	74	74	74	74	74	74	66	60	55	50	47	43
	30	74	74	74	74	74	74	74	66	60	55	50	47	43
	40	66	66	66	66	66	66	66	66	60	55	50	47	43
	50	60	60	60	60	60	60	60	60	60	55	50	47	43
	60	55	55	55	55	55	55	55	55	55	55	50	47	43
	70	51	51	51	51	51	51	51	51	51	51	50	47	43
	80	48	48	48	48	48	48	48	48	48	48	48	47	43
	90	45	45	45	45	45	45	45	45	45	45	45	45	43
Zones 2e & 3	0	101	96	90	84	79	74	70	63	57	52	48	44	41
	10	97	96	90	84	79	74	70	63	57	52	48	44	41
	20	74	74	74	74	74	74	70	63	57	52	48	44	41
	30	74	74	74	74	74	74	70	63	57	52	48	44	41
	40	66	66	66	66	66	66	66	63	57	52	48	44	41
	50	60	60	60	60	60	60	60	60	57	52	48	44	41
	60	55	55	55	55	55	55	55	55	55	52	48	44	41
	70	51	51	51	51	51	51	51	51	51	51	48	44	41
	80	48	48	48	48	48	48	48	48	48	48	48	44	41
	90	45	45	45	45	45	45	45	45	45	45	45	44	41

Notes:

1. Tables are based on critical rail span for load combinations as specified in chapter 2 of the ASCE 7-16 and allowable design loads per the 2015 Aluminum Design Manual.
2. Panels are assumed to be in portrait orientation with a maximum length of 82"

Structural ENGINUITY INC
Ingenuity in Engineering

SUNMODO®

Max Rail Spans for SunModo SMR200 Rail System

Table 63a

Mean Roof Height: h ≤ 15 ft
Roof Angle: 7 < θ ≤ 20 degrees
Exposure Category: D
Panel Orientation: Portrait
North/South Support Y_E = 1
Roof Type : Hip h/B = ≥ 0.8

Roof Wind Zone	Ground Snow Load (psf)	Wind Speed (mph)												
		90	95	100	105	110	115	120	130	140	150	160	170	180
Zone 1	0	111	111	111	111	107	102	98	88	79	71	66	61	57
	10	97	97	97	97	96	95	94	88	79	71	66	61	57
	20	74	74	74	74	74	74	74	74	73	71	66	61	57
	30	74	74	74	74	74	74	74	74	73	71	66	61	57
	40	66	66	66	66	66	66	66	66	66	66	64	61	57
	50	60	60	60	60	60	60	60	60	60	60	60	59	57
	60	55	55	55	55	55	55	55	55	55	55	55	55	54
	70	51	51	51	51	51	51	51	51	51	51	51	51	51
	80	48	48	48	48	48	48	48	48	48	48	48	48	48
	90	45	45	45	45	45	45	45	45	45	45	45	45	45
Zone 2r	0	111	111	105	101	96	90	85	76	69	63	58	54	50
	10	97	97	97	97	96	90	85	76	69	63	58	54	50
	20	74	74	74	74	74	74	74	74	69	63	58	54	50
	30	74	74	74	74	74	74	74	74	69	63	58	54	50
	40	66	66	66	66	66	66	66	66	66	63	58	54	50
	50	60	60	60	60	60	60	60	60	60	60	58	54	50
	60	55	55	55	55	55	55	55	55	55	55	55	54	50
	70	51	51	51	51	51	51	51	51	51	51	51	51	50
	80	48	48	48	48	48	48	48	48	48	48	48	48	48
	90	45	45	45	45	45	45	45	45	45	45	45	45	45
Zones 2e & 3	0	111	107	101	97	91	86	81	72	66	60	55	51	47
	10	97	97	97	97	91	86	81	72	66	60	55	51	47
	20	74	74	74	74	74	74	74	72	66	60	55	51	47
	30	74	74	74	74	74	74	74	72	66	60	55	51	47
	40	66	66	66	66	66	66	66	66	66	60	55	51	47
	50	60	60	60	60	60	60	60	60	60	60	55	51	47
	60	55	55	55	55	55	55	55	55	55	55	55	51	47
	70	51	51	51	51	51	51	51	51	51	51	51	51	47
	80	48	48	48	48	48	48	48	48	48	48	48	48	47
	90	45	45	45	45	45	45	45	45	45	45	45	45	45

Notes:

1. Tables are based on critical rail span for load combinations as specified in chapter 2 of the ASCE 7-16 and allowable design loads per the 2015 Aluminum Design Manual.
2. Panels are assumed to be in portrait orientation with a maximum length of 82"

Structural ENGINUITY INC
Ingenuity in Engineering

SUNMODO®

Max Rail Spans for SunModo SMR200 Rail System

Table 63b

Mean Roof Height: h ≤ 15 ft
Roof Angle: 7 < θ ≤ 20 degrees
Exposure Category: D
Panel Orientation: Portrait
North/South Support γ_E = 1.5
Roof Type : Hip h/B = ≥ 0.8

Roof Wind Zone	Ground Snow Load (psf)	Wind Speed (mph)												
		90	95	100	105	110	115	120	130	140	150	160	170	180
Zone 1	0	107	101	96	89	83	78	73	66	60	56	52	48	45
	10	97	97	96	89	83	78	73	66	60	56	52	48	45
	20	74	74	74	74	74	74	73	66	60	56	52	48	45
	30	74	74	74	74	74	74	73	66	60	56	52	48	45
	40	66	66	66	66	66	66	66	66	60	56	52	48	45
	50	60	60	60	60	60	60	60	60	60	56	52	48	45
	60	55	55	55	55	55	55	55	55	55	55	52	48	45
	70	51	51	51	51	51	51	51	51	51	51	51	48	45
	80	48	48	48	48	48	48	48	48	48	48	48	48	45
	90	45	45	45	45	45	45	45	45	45	45	45	45	45
Zone 2r	0	96	89	83	78	73	69	65	58	53	48	45	41	38
	10	96	89	83	78	73	69	65	58	53	48	45	41	38
	20	74	74	74	74	73	69	65	58	53	48	45	41	38
	30	74	74	74	74	73	69	65	58	53	48	45	41	38
	40	66	66	66	66	66	66	65	58	53	48	45	41	38
	50	60	60	60	60	60	60	60	58	53	48	45	41	38
	60	55	55	55	55	55	55	55	55	53	48	45	41	38
	70	51	51	51	51	51	51	51	51	51	48	45	41	38
	80	48	48	48	48	48	48	48	48	48	48	45	41	38
	90	45	45	45	45	45	45	45	45	45	45	45	41	38
Zones 2e & 3	0	91	84	79	73	69	65	62	55	50	46	42	39	37
	10	91	84	79	73	69	65	62	55	50	46	42	39	37
	20	74	74	74	73	69	65	62	55	50	46	42	39	37
	30	74	74	74	73	69	65	62	55	50	46	42	39	37
	40	66	66	66	66	66	65	62	55	50	46	42	39	37
	50	60	60	60	60	60	60	60	55	50	46	42	39	37
	60	55	55	55	55	55	55	55	55	50	46	42	39	37
	70	51	51	51	51	51	51	51	51	50	46	42	39	37
	80	48	48	48	48	48	48	48	48	48	46	42	39	37
	90	45	45	45	45	45	45	45	45	45	45	42	39	37

Notes:

1. Tables are based on critical rail span for load combinations as specified in chapter 2 of the ASCE 7-16 and allowable design loads per the 2015 Aluminum Design Manual.
2. Panels are assumed to be in portrait orientation with a maximum length of 82"

Structural ENGINUITY INC
Ingenuity in Engineering

SUNMODO®

Max Rail Spans for SunModo SMR200 Rail System

Table 64a

Mean Roof Height: h ≤ 15 ft
Roof Angle: 7 < θ ≤ 20 degrees
Exposure Category: B
Panel Orientation: Portrait
North/South Support Y_E = 1
Roof Type : Hip h/B = ≤ 0.5

Roof Wind Zone	Ground Snow Load (psf)	Wind Speed (mph)												
		90	95	100	105	110	115	120	130	140	150	160	170	180
Zone 1	0	111	111	111	111	111	111	111	111	111	111	111	106	101
	10	97	97	97	97	97	97	97	97	97	96	94	93	91
	20	74	74	74	74	74	74	74	74	74	74	74	74	74
	30	74	74	74	74	74	74	74	74	74	74	74	74	74
	40	66	66	66	66	66	66	66	66	66	66	66	66	66
	50	60	60	60	60	60	60	60	60	60	60	60	60	60
	60	55	55	55	55	55	55	55	55	55	55	55	55	55
	70	51	51	51	51	51	51	51	51	51	51	51	51	51
	80	48	48	48	48	48	48	48	48	48	48	48	48	48
	90	45	45	45	45	45	45	45	45	45	45	45	45	45
Zone 2r	0	111	111	111	111	111	111	111	109	101	94	86	79	73
	10	97	97	97	97	97	97	97	97	97	94	86	79	73
	20	74	74	74	74	74	74	74	74	74	74	74	74	73
	30	74	74	74	74	74	74	74	74	74	74	74	74	73
	40	66	66	66	66	66	66	66	66	66	66	66	66	66
	50	60	60	60	60	60	60	60	60	60	60	60	60	60
	60	55	55	55	55	55	55	55	55	55	55	55	55	55
	70	51	51	51	51	51	51	51	51	51	51	51	51	51
	80	48	48	48	48	48	48	48	48	48	48	48	48	48
	90	45	45	45	45	45	45	45	45	45	45	45	45	45
Zones 2e & 3	0	111	111	111	111	111	111	111	111	111	107	101	95	88
	10	97	97	97	97	97	97	97	97	97	96	94	93	88
	20	74	74	74	74	74	74	74	74	74	74	74	74	74
	30	74	74	74	74	74	74	74	74	74	74	74	74	74
	40	66	66	66	66	66	66	66	66	66	66	66	66	66
	50	60	60	60	60	60	60	60	60	60	60	60	60	60
	60	55	55	55	55	55	55	55	55	55	55	55	55	55
	70	51	51	51	51	51	51	51	51	51	51	51	51	51
	80	48	48	48	48	48	48	48	48	48	48	48	48	48
	90	45	45	45	45	45	45	45	45	45	45	45	45	45

Notes:

1. Tables are based on critical rail span for load combinations as specified in chapter 2 of the ASCE 7-16 and allowable design loads per the 2015 Aluminum Design Manual.
2. Panels are assumed to be in portrait orientation with a maximum length of 82"

Structural ENGINUITY INC
Ingenuity in Engineering

SUNMODO®

Max Rail Spans for SunModo SMR200 Rail System

Table 64b

Mean Roof Height: h ≤ 15 ft
Roof Angle: 7 < θ ≤ 20 degrees
Exposure Category: B

Panel Orientation: Portrait
North/South Support γ_E = 1.5
Roof Type : Hip h/B = ≤ 0.5

Roof Wind Zone	Ground Snow Load (psf)	Wind Speed (mph)												
		90	95	100	105	110	115	120	130	140	150	160	170	180
Zone 1	0	111	111	111	111	111	111	111	111	105	99	92	84	78
	10	97	97	97	97	97	97	97	97	97	96	92	84	78
	20	74	74	74	74	74	74	74	74	74	74	74	74	74
	30	74	74	74	74	74	74	74	74	74	74	74	74	74
	40	66	66	66	66	66	66	66	66	66	66	66	66	66
	50	60	60	60	60	60	60	60	60	60	60	60	60	60
	60	55	55	55	55	55	55	55	55	55	55	55	55	55
	70	51	51	51	51	51	51	51	51	51	51	51	51	51
	80	48	48	48	48	48	48	48	48	48	48	48	48	48
	90	45	45	45	45	45	45	45	45	45	45	45	45	45
Zone 2r	0	111	111	111	110	105	101	97	87	78	71	66	60	56
	10	97	97	97	97	97	97	97	87	78	71	66	60	56
	20	74	74	74	74	74	74	74	74	74	71	66	60	56
	30	74	74	74	74	74	74	74	74	74	71	66	60	56
	40	66	66	66	66	66	66	66	66	66	66	66	60	56
	50	60	60	60	60	60	60	60	60	60	60	60	60	56
	60	55	55	55	55	55	55	55	55	55	55	55	55	55
	70	51	51	51	51	51	51	51	51	51	51	51	51	51
	80	48	48	48	48	48	48	48	48	48	48	48	48	48
	90	45	45	45	45	45	45	45	45	45	45	45	45	45
Zones 2e & 3	0	111	111	111	111	111	111	109	101	94	85	78	72	67
	10	97	97	97	97	97	97	97	97	94	85	78	72	67
	20	74	74	74	74	74	74	74	74	74	74	74	72	67
	30	74	74	74	74	74	74	74	74	74	74	74	72	67
	40	66	66	66	66	66	66	66	66	66	66	66	66	66
	50	60	60	60	60	60	60	60	60	60	60	60	60	60
	60	55	55	55	55	55	55	55	55	55	55	55	55	55
	70	51	51	51	51	51	51	51	51	51	51	51	51	51
	80	48	48	48	48	48	48	48	48	48	48	48	48	48
	90	45	45	45	45	45	45	45	45	45	45	45	45	45

Notes:

1. Tables are based on critical rail span for load combinations as specified in chapter 2 of the ASCE 7-16 and allowable design loads per the 2015 Aluminum Design Manual.
2. Panels are assumed to be in portrait orientation with a maximum length of 82"

Structural ENGINUITY INC
Ingenuity in Engineering

SUNMODO®

Max Rail Spans for SunModo SMR200 Rail System

Table 65a

Mean Roof Height: h ≤ 15 ft
Roof Angle: 7 < θ ≤ 20 degrees
Exposure Category: C
Panel Orientation: Portrait
North/South Support Y_E = 1
Roof Type : Hip h/B = ≤ 0.5

Roof Wind Zone	Ground Snow Load (psf)	Wind Speed (mph)												
		90	95	100	105	110	115	120	130	140	150	160	170	180
Zone 1	0	111	111	111	111	111	111	111	111	106	99	92	85	78
	10	97	97	97	97	97	97	96	94	92	91	89	85	78
	20	74	74	74	74	74	74	74	74	74	74	73	69	68
	30	74	74	74	74	74	74	74	74	74	74	73	69	68
	40	66	66	66	66	66	66	66	66	66	66	65	64	63
	50	60	60	60	60	60	60	60	60	60	60	60	59	58
	60	55	55	55	55	55	55	55	55	55	55	55	55	55
	70	51	51	51	51	51	51	51	51	51	51	51	51	51
	80	48	48	48	48	48	48	48	48	48	48	48	48	48
	90	45	45	45	45	45	45	45	45	45	45	45	45	45
Zone 2r	0	111	111	111	110	105	101	97	87	79	72	66	61	56
	10	97	97	97	97	97	97	96	87	79	72	66	61	56
	20	74	74	74	74	74	74	74	74	74	72	66	61	56
	30	74	74	74	74	74	74	74	74	74	72	66	61	56
	40	66	66	66	66	66	66	66	66	66	66	65	61	56
	50	60	60	60	60	60	60	60	60	60	60	60	59	56
	60	55	55	55	55	55	55	55	55	55	55	55	55	55
	70	51	51	51	51	51	51	51	51	51	51	51	51	51
	80	48	48	48	48	48	48	48	48	48	48	48	48	48
	90	45	45	45	45	45	45	45	45	45	45	45	45	45
Zones 2e & 3	0	111	111	111	111	111	111	110	102	94	86	79	73	67
	10	97	97	97	97	97	97	96	94	92	86	79	73	67
	20	74	74	74	74	74	74	74	74	74	74	73	69	67
	30	74	74	74	74	74	74	74	74	74	74	73	69	67
	40	66	66	66	66	66	66	66	66	66	66	65	64	63
	50	60	60	60	60	60	60	60	60	60	60	60	59	58
	60	55	55	55	55	55	55	55	55	55	55	55	55	55
	70	51	51	51	51	51	51	51	51	51	51	51	51	51
	80	48	48	48	48	48	48	48	48	48	48	48	48	48
	90	45	45	45	45	45	45	45	45	45	45	45	45	45

Notes:

1. Tables are based on critical rail span for load combinations as specified in chapter 2 of the ASCE 7-16 and allowable design loads per the 2015 Aluminum Design Manual.
2. Panels are assumed to be in portrait orientation with a maximum length of 82"

Structural ENGINUITY INC
Ingenuity in Engineering

SUNMODO®

Max Rail Spans for SunModo SMR200 Rail System

Table 65b

Mean Roof Height: h ≤ 15 ft
Roof Angle: 7 < θ ≤ 20 degrees
Exposure Category: C
Panel Orientation: Portrait
North/South Support γ_E = 1.5
Roof Type : Hip h/B = ≤ 0.5

Roof Wind Zone	Ground Snow Load (psf)	Wind Speed (mph)												
		90	95	100	105	110	115	120	130	140	150	160	170	180
Zone 1	0	111	111	111	111	110	105	101	93	84	76	70	65	61
	10	97	97	97	97	97	97	96	93	84	76	70	65	61
	20	74	74	74	74	74	74	74	74	74	74	70	65	61
	30	74	74	74	74	74	74	74	74	74	74	70	65	61
	40	66	66	66	66	66	66	66	66	66	66	65	64	61
	50	60	60	60	60	60	60	60	60	60	60	60	59	58
	60	55	55	55	55	55	55	55	55	55	55	55	55	55
	70	51	51	51	51	51	51	51	51	51	51	51	51	51
	80	48	48	48	48	48	48	48	48	48	48	48	48	48
	90	45	45	45	45	45	45	45	45	45	45	45	45	45
Zone 2r	0	105	100	95	88	83	78	74	66	60	55	50	47	43
	10	97	97	95	88	83	78	74	66	60	55	50	47	43
	20	74	74	74	74	74	74	74	66	60	55	50	47	43
	30	74	74	74	74	74	74	74	66	60	55	50	47	43
	40	66	66	66	66	66	66	66	66	60	55	50	47	43
	50	60	60	60	60	60	60	60	60	60	55	50	47	43
	60	55	55	55	55	55	55	55	55	55	55	50	47	43
	70	51	51	51	51	51	51	51	51	51	51	50	47	43
	80	48	48	48	48	48	48	48	48	48	48	48	47	43
	90	45	45	45	45	45	45	45	45	45	45	45	45	43
Zones 2e & 3	0	111	111	108	103	98	94	88	79	72	66	60	56	52
	10	97	97	97	97	97	94	88	79	72	66	60	56	52
	20	74	74	74	74	74	74	74	74	72	66	60	56	52
	30	74	74	74	74	74	74	74	74	72	66	60	56	52
	40	66	66	66	66	66	66	66	66	66	66	60	56	52
	50	60	60	60	60	60	60	60	60	60	60	60	56	52
	60	55	55	55	55	55	55	55	55	55	55	55	55	52
	70	51	51	51	51	51	51	51	51	51	51	51	51	51
	80	48	48	48	48	48	48	48	48	48	48	48	48	48
	90	45	45	45	45	45	45	45	45	45	45	45	45	45

Notes:

1. Tables are based on critical rail span for load combinations as specified in chapter 2 of the ASCE 7-16 and allowable design loads per the 2015 Aluminum Design Manual.
2. Panels are assumed to be in portrait orientation with a maximum length of 82"

Structural ENGINUITY INC
Ingenuity in Engineering

SUNMODO®

Max Rail Spans for SunModo SMR200 Rail System

Table 66a

Mean Roof Height: h ≤ 15 ft
Roof Angle: 7 < θ ≤ 20 degrees
Exposure Category: D
Panel Orientation: Portrait
North/South Support Y_E = 1
Roof Type : Hip h/B = ≤ 0.5

Roof Wind Zone	Ground Snow Load (psf)	Wind Speed (mph)												
		90	95	100	105	110	115	120	130	140	150	160	170	180
Zone 1	0	111	111	111	111	111	111	111	104	97	88	81	74	69
	10	97	97	97	97	96	95	94	92	90	88	81	74	69
	20	74	74	74	74	74	74	74	74	73	72	69	67	66
	30	74	74	74	74	74	74	74	74	73	72	69	67	66
	40	66	66	66	66	66	66	66	66	65	64	63	62	61
	50	60	60	60	60	60	60	60	60	60	60	59	58	57
	60	55	55	55	55	55	55	55	55	55	55	55	54	53
	70	51	51	51	51	51	51	51	51	51	51	51	51	51
	80	48	48	48	48	48	48	48	48	48	48	48	48	48
	90	45	45	45	45	45	45	45	45	45	45	45	45	45
Zone 2r	0	111	111	105	101	96	90	85	76	69	63	58	54	50
	10	97	97	97	97	96	90	85	76	69	63	58	54	50
	20	74	74	74	74	74	74	74	74	69	63	58	54	50
	30	74	74	74	74	74	74	74	74	69	63	58	54	50
	40	66	66	66	66	66	66	66	66	65	63	58	54	50
	50	60	60	60	60	60	60	60	60	60	60	58	54	50
	60	55	55	55	55	55	55	55	55	55	55	55	54	50
	70	51	51	51	51	51	51	51	51	51	51	51	51	50
	80	48	48	48	48	48	48	48	48	48	48	48	48	48
	90	45	45	45	45	45	45	45	45	45	45	45	45	45
Zones 2e & 3	0	111	111	111	111	109	104	100	92	83	75	69	64	59
	10	97	97	97	97	96	95	94	92	83	75	69	64	59
	20	74	74	74	74	74	74	74	74	73	72	69	64	59
	30	74	74	74	74	74	74	74	74	73	72	69	64	59
	40	66	66	66	66	66	66	66	66	65	64	63	62	59
	50	60	60	60	60	60	60	60	60	60	60	59	58	57
	60	55	55	55	55	55	55	55	55	55	55	55	54	53
	70	51	51	51	51	51	51	51	51	51	51	51	51	51
	80	48	48	48	48	48	48	48	48	48	48	48	48	48
	90	45	45	45	45	45	45	45	45	45	45	45	45	45

Notes:

1. Tables are based on critical rail span for load combinations as specified in chapter 2 of the ASCE 7-16 and allowable design loads per the 2015 Aluminum Design Manual.
2. Panels are assumed to be in portrait orientation with a maximum length of 82"

Structural ENGINUITY INC
Ingenuity in Engineering

SUNMODO®

Max Rail Spans for SunModo SMR200 Rail System

Table 66b

Mean Roof Height: h ≤ 15 ft
Roof Angle: 7 < θ ≤ 20 degrees
Exposure Category: D
Panel Orientation: Portrait
North/South Support γ_E = 1.5
Roof Type : Hip h/B = ≤ 0.5

Roof Wind Zone	Ground Snow Load (psf)	Wind Speed (mph)												
		90	95	100	105	110	115	120	130	140	150	160	170	180
Zone 1	0	111	111	110	105	100	96	91	81	74	67	62	58	54
	10	97	97	97	97	96	95	91	81	74	67	62	58	54
	20	74	74	74	74	74	74	74	74	73	67	62	58	54
	30	74	74	74	74	74	74	74	74	73	67	62	58	54
	40	66	66	66	66	66	66	66	66	65	64	62	58	54
	50	60	60	60	60	60	60	60	60	60	60	59	58	54
	60	55	55	55	55	55	55	55	55	55	55	55	54	53
	70	51	51	51	51	51	51	51	51	51	51	51	51	51
	80	48	48	48	48	48	48	48	48	48	48	48	48	48
	90	45	45	45	45	45	45	45	45	45	45	45	45	45
Zone 2r	0	96	89	83	78	73	69	65	58	53	48	45	41	38
	10	96	89	83	78	73	69	65	58	53	48	45	41	38
	20	74	74	74	74	73	69	65	58	53	48	45	41	38
	30	74	74	74	74	73	69	65	58	53	48	45	41	38
	40	66	66	66	66	66	66	65	58	53	48	45	41	38
	50	60	60	60	60	60	60	60	58	53	48	45	41	38
	60	55	55	55	55	55	55	55	55	53	48	45	41	38
	70	51	51	51	51	51	51	51	51	51	48	45	41	38
	80	48	48	48	48	48	48	48	48	48	48	45	41	38
	90	45	45	45	45	45	45	45	45	45	45	45	41	38
Zones 2e & 3	0	108	103	98	93	87	82	78	70	63	58	53	49	46
	10	97	97	97	93	87	82	78	70	63	58	53	49	46
	20	74	74	74	74	74	74	74	70	63	58	53	49	46
	30	74	74	74	74	74	74	74	70	63	58	53	49	46
	40	66	66	66	66	66	66	66	66	63	58	53	49	46
	50	60	60	60	60	60	60	60	60	60	58	53	49	46
	60	55	55	55	55	55	55	55	55	55	55	53	49	46
	70	51	51	51	51	51	51	51	51	51	51	51	49	46
	80	48	48	48	48	48	48	48	48	48	48	48	48	46
	90	45	45	45	45	45	45	45	45	45	45	45	45	45

Notes:

1. Tables are based on critical rail span for load combinations as specified in chapter 2 of the ASCE 7-16 and allowable design loads per the 2015 Aluminum Design Manual.
2. Panels are assumed to be in portrait orientation with a maximum length of 82"

Structural ENGINUITY INC
Ingenuity in Engineering

SUNMODO®

Max Rail Spans for SunModo SMR200 Rail System

Table 67a

Mean Roof Height: h ≤ 15 ft
Roof Angle: 20 < θ ≤ 27 degrees
Exposure Category: B
Panel Orientation: Portrait
North/South Support Y_E = 1
Roof Type : Hip

Roof Wind Zone	Ground Snow Load (psf)	Wind Speed (mph)												
		90	95	100	105	110	115	120	130	140	150	160	170	180
Zone 1	0	111	111	111	111	111	111	111	111	111	111	111	111	105
	10	106	106	106	106	106	106	106	106	106	105	104	102	100
	20	88	88	88	88	88	88	88	88	88	88	87	86	84
	30	75	75	75	75	75	75	75	75	75	75	75	75	74
	40	66	66	66	66	66	66	66	66	66	66	66	66	66
	50	60	60	60	60	60	60	60	60	60	60	60	60	60
	60	55	55	55	55	55	55	55	55	55	55	55	55	55
	70	52	52	52	52	52	52	52	52	52	52	52	52	52
	80	48	48	48	48	48	48	48	48	48	48	48	48	48
	90	46	46	46	46	46	46	46	46	46	46	46	46	46
Zones 2e, 2r, & 3	0	111	111	111	111	111	111	111	111	111	104	98	90	83
	10	106	106	106	106	106	106	106	106	106	104	98	90	83
	20	88	88	88	88	88	88	88	88	88	88	87	86	83
	30	75	75	75	75	75	75	75	75	75	75	75	75	74
	40	66	66	66	66	66	66	66	66	66	66	66	66	66
	50	60	60	60	60	60	60	60	60	60	60	60	60	60
	60	55	55	55	55	55	55	55	55	55	55	55	55	55
	70	52	52	52	52	52	52	52	52	52	52	52	52	52
	80	48	48	48	48	48	48	48	48	48	48	48	48	48
	90	46	46	46	46	46	46	46	46	46	46	46	46	46

Notes:

1. Tables are based on critical rail span for load combinations as specified in chapter 2 of the ASCE 7-16 and allowable design loads per the 2015 Aluminum Design Manual.
2. Panels are assumed to be in portrait orientation with a maximum length of 82"

Structural ENGINUITY INC
Ingenuity in Engineering

SUNMODO®

Max Rail Spans for SunModo SMR200 Rail System

Table 67b

Mean Roof Height: h ≤ 15 ft
Roof Angle: 20 < θ ≤ 27 degrees
Exposure Category: B
Panel Orientation: Portrait
North/South Support γ_E = 1.5
Roof Type : Hip

Roof Wind Zone	Ground Snow Load (psf)	Wind Speed (mph)												
		90	95	100	105	110	115	120	130	140	150	160	170	180
Zone 1	0	111	111	111	111	111	111	111	111	110	103	96	88	81
	10	106	106	106	106	106	106	106	106	106	103	96	88	81
	20	88	88	88	88	88	88	88	88	88	88	87	86	81
	30	75	75	75	75	75	75	75	75	75	75	75	75	74
	40	66	66	66	66	66	66	66	66	66	66	66	66	66
	50	60	60	60	60	60	60	60	60	60	60	60	60	60
	60	55	55	55	55	55	55	55	55	55	55	55	55	55
	70	52	52	52	52	52	52	52	52	52	52	52	52	52
	80	48	48	48	48	48	48	48	48	48	48	48	48	48
	90	46	46	46	46	46	46	46	46	46	46	46	46	46
Zones 2e, 2r, & 3	0	111	111	111	111	111	111	106	98	89	81	74	68	63
	10	106	106	106	106	106	106	106	98	89	81	74	68	63
	20	88	88	88	88	88	88	88	88	88	81	74	68	63
	30	75	75	75	75	75	75	75	75	75	75	74	68	63
	40	66	66	66	66	66	66	66	66	66	66	66	66	63
	50	60	60	60	60	60	60	60	60	60	60	60	60	60
	60	55	55	55	55	55	55	55	55	55	55	55	55	55
	70	52	52	52	52	52	52	52	52	52	52	52	52	52
	80	48	48	48	48	48	48	48	48	48	48	48	48	48
	90	46	46	46	46	46	46	46	46	46	46	46	46	46

Notes:

1. Tables are based on critical rail span for load combinations as specified in chapter 2 of the ASCE 7-16 and allowable design loads per the 2015 Aluminum Design Manual.
2. Panels are assumed to be in portrait orientation with a maximum length of 82"

Structural ENGINUITY INC
Ingenuity in Engineering

SUNMODO®

Max Rail Spans for SunModo SMR200 Rail System

Table 68a

Mean Roof Height: h ≤ 15 ft
Roof Angle: 20 < θ ≤ 27 degrees
Exposure Category: C
Panel Orientation: Portrait
North/South Support Y_E = 1
Roof Type : Hip

Roof Wind Zone	Ground Snow Load (psf)	Wind Speed (mph)												
		90	95	100	105	110	115	120	130	140	150	160	170	180
Zone 1	0	111	111	111	111	111	111	111	111	110	103	96	88	82
	10	106	106	106	106	106	106	106	104	101	99	96	88	82
	20	88	88	88	88	88	88	88	87	85	84	82	81	79
	30	75	75	75	75	75	75	75	75	75	74	73	72	71
	40	66	66	66	66	66	66	66	66	66	66	66	65	64
	50	60	60	60	60	60	60	60	60	60	60	60	60	60
	60	55	55	55	55	55	55	55	55	55	55	55	55	55
	70	52	52	52	52	52	52	52	52	52	52	52	52	52
	80	48	48	48	48	48	48	48	48	48	48	48	48	48
	90	46	46	46	46	46	46	46	46	46	46	46	46	46
Zones 2e, 2r, & 3	0	111	111	111	111	111	111	106	99	89	81	74	68	63
	10	106	106	106	106	106	106	106	99	89	81	74	68	63
	20	88	88	88	88	88	88	88	87	85	81	74	68	63
	30	75	75	75	75	75	75	75	75	75	74	73	68	63
	40	66	66	66	66	66	66	66	66	66	66	66	65	63
	50	60	60	60	60	60	60	60	60	60	60	60	60	60
	60	55	55	55	55	55	55	55	55	55	55	55	55	55
	70	52	52	52	52	52	52	52	52	52	52	52	52	52
	80	48	48	48	48	48	48	48	48	48	48	48	48	48
	90	46	46	46	46	46	46	46	46	46	46	46	46	46

Notes:

1. Tables are based on critical rail span for load combinations as specified in chapter 2 of the ASCE 7-16 and allowable design loads per the 2015 Aluminum Design Manual.
2. Panels are assumed to be in portrait orientation with a maximum length of 82"

Structural ENGINUITY INC
Ingenuity in Engineering

SUNMODO®

Max Rail Spans for SunModo SMR200 Rail System

Table 68b

Mean Roof Height: h ≤ 15 ft
Roof Angle: 20 < θ ≤ 27 degrees
Exposure Category: C
Panel Orientation: Portrait
North/South Support γ_E = 1.5
Roof Type : Hip

Roof Wind Zone	Ground Snow Load (psf)	Wind Speed (mph)												
		90	95	100	105	110	115	120	130	140	150	160	170	180
Zone 1	0	111	111	111	111	111	110	105	97	87	79	73	67	62
	10	106	106	106	106	106	106	105	97	87	79	73	67	62
	20	88	88	88	88	88	88	88	87	85	79	73	67	62
	30	75	75	75	75	75	75	75	75	75	74	73	67	62
	40	66	66	66	66	66	66	66	66	66	66	66	65	62
	50	60	60	60	60	60	60	60	60	60	60	60	60	60
	60	55	55	55	55	55	55	55	55	55	55	55	55	55
	70	52	52	52	52	52	52	52	52	52	52	52	52	52
	80	48	48	48	48	48	48	48	48	48	48	48	48	48
	90	46	46	46	46	46	46	46	46	46	46	46	46	46
Zones 2e, 2r, & 3	0	111	110	104	100	94	88	83	75	68	62	57	52	49
	10	106	106	104	100	94	88	83	75	68	62	57	52	49
	20	88	88	88	88	88	88	83	75	68	62	57	52	49
	30	75	75	75	75	75	75	75	75	68	62	57	52	49
	40	66	66	66	66	66	66	66	66	66	62	57	52	49
	50	60	60	60	60	60	60	60	60	60	60	57	52	49
	60	55	55	55	55	55	55	55	55	55	55	55	52	49
	70	52	52	52	52	52	52	52	52	52	52	52	52	49
	80	48	48	48	48	48	48	48	48	48	48	48	48	48
	90	46	46	46	46	46	46	46	46	46	46	46	46	46

Notes:

1. Tables are based on critical rail span for load combinations as specified in chapter 2 of the ASCE 7-16 and allowable design loads per the 2015 Aluminum Design Manual.
2. Panels are assumed to be in portrait orientation with a maximum length of 82"

Structural ENGINUITY INC
Ingenuity in Engineering

SUNMODO®

Max Rail Spans for SunModo SMR200 Rail System

Table 69a

Mean Roof Height: h ≤ 15 ft
Roof Angle: 20 < θ ≤ 27 degrees
Exposure Category: D
Panel Orientation: Portrait
North/South Support Y_E = 1
Roof Type : Hip

Roof Wind Zone	Ground Snow Load (psf)	Wind Speed (mph)												
		90	95	100	105	110	115	120	130	140	150	160	170	180
Zone 1	0	111	111	111	111	111	111	111	108	101	92	84	77	72
	10	106	106	106	106	106	105	103	101	98	92	84	77	72
	20	88	88	88	88	88	87	87	85	83	81	80	77	72
	30	75	75	75	75	75	75	75	75	74	72	71	70	68
	40	66	66	66	66	66	66	66	66	66	66	65	64	63
	50	60	60	60	60	60	60	60	60	60	60	60	59	58
	60	55	55	55	55	55	55	55	55	55	55	55	55	55
	70	52	52	52	52	52	52	52	52	52	52	52	52	52
	80	48	48	48	48	48	48	48	48	48	48	48	48	48
	90	46	46	46	46	46	46	46	46	46	46	46	46	46
Zones 2e, 2r, & 3	0	111	111	111	110	105	101	97	86	78	71	65	60	56
	10	106	106	106	106	105	101	97	86	78	71	65	60	56
	20	88	88	88	88	88	87	87	85	78	71	65	60	56
	30	75	75	75	75	75	75	75	75	74	71	65	60	56
	40	66	66	66	66	66	66	66	66	66	66	65	60	56
	50	60	60	60	60	60	60	60	60	60	60	60	59	56
	60	55	55	55	55	55	55	55	55	55	55	55	55	55
	70	52	52	52	52	52	52	52	52	52	52	52	52	52
	80	48	48	48	48	48	48	48	48	48	48	48	48	48
	90	46	46	46	46	46	46	46	46	46	46	46	46	46

Notes:

1. Tables are based on critical rail span for load combinations as specified in chapter 2 of the ASCE 7-16 and allowable design loads per the 2015 Aluminum Design Manual.
2. Panels are assumed to be in portrait orientation with a maximum length of 82"

Structural ENGINUITY INC
Ingenuity in Engineering

SUNMODO®

Max Rail Spans for SunModo SMR200 Rail System

Table 69b

Mean Roof Height: h ≤ 15 ft
Roof Angle: 20 < θ ≤ 27 degrees
Exposure Category: D
Panel Orientation: Portrait
North/South Support γ_E = 1.5
Roof Type : Hip

Roof Wind Zone	Ground Snow Load (psf)	Wind Speed (mph)												
		90	95	100	105	110	115	120	130	140	150	160	170	180
Zone 1	0	111	111	111	109	104	100	95	85	76	70	64	59	55
	10	106	106	106	106	104	100	95	85	76	70	64	59	55
	20	88	88	88	88	88	87	87	85	76	70	64	59	55
	30	75	75	75	75	75	75	75	75	74	70	64	59	55
	40	66	66	66	66	66	66	66	66	66	66	64	59	55
	50	60	60	60	60	60	60	60	60	60	60	60	59	55
	60	55	55	55	55	55	55	55	55	55	55	55	55	55
	70	52	52	52	52	52	52	52	52	52	52	52	52	52
	80	48	48	48	48	48	48	48	48	48	48	48	48	48
	90	46	46	46	46	46	46	46	46	46	46	46	46	46
Zones 2e, 2r, & 3	0	105	100	94	88	82	77	73	66	60	55	50	46	43
	10	105	100	94	88	82	77	73	66	60	55	50	46	43
	20	88	88	88	88	82	77	73	66	60	55	50	46	43
	30	75	75	75	75	75	75	73	66	60	55	50	46	43
	40	66	66	66	66	66	66	66	66	60	55	50	46	43
	50	60	60	60	60	60	60	60	60	60	55	50	46	43
	60	55	55	55	55	55	55	55	55	55	55	50	46	43
	70	52	52	52	52	52	52	52	52	52	52	50	46	43
	80	48	48	48	48	48	48	48	48	48	48	48	46	43
	90	46	46	46	46	46	46	46	46	46	46	46	46	43

Notes:

1. Tables are based on critical rail span for load combinations as specified in chapter 2 of the ASCE 7-16 and allowable design loads per the 2015 Aluminum Design Manual.
2. Panels are assumed to be in portrait orientation with a maximum length of 82"

Structural ENGINUITY INC
Ingenuity in Engineering

SUNMODO®

Max Rail Spans for SunModo SMR200 Rail System

Table 70a

Mean Roof Height: h ≤ 15 ft
Roof Angle: 27 < θ ≤ 45 degrees
Exposure Category: B
Panel Orientation: Portrait
North/South Support Y_E = 1
Roof Type : Hip

Roof Wind Zone	Ground Snow Load (psf)	Wind Speed (mph)												
		90	95	100	105	110	115	120	130	140	150	160	170	180
Zone 1	0	111	111	111	111	111	111	111	111	111	111	111	105	97
	10	107	107	107	107	107	107	107	107	107	107	106	104	97
	20	92	92	92	92	92	92	92	92	92	91	90	89	87
	30	79	79	79	79	79	79	79	79	79	79	79	79	78
	40	70	70	70	70	70	70	70	70	70	70	70	70	70
	50	64	64	64	64	64	64	64	64	64	64	64	64	64
	60	59	59	59	59	59	59	59	59	59	59	59	59	59
	70	55	55	55	55	55	55	55	55	55	55	55	55	55
	80	52	52	52	52	52	52	52	52	52	52	52	52	52
	90	49	49	49	49	49	49	49	49	49	49	49	49	49
Zone 2e	0	111	111	111	111	111	111	111	111	111	111	111	107	99
	10	107	107	107	107	107	107	107	107	107	107	106	104	99
	20	92	92	92	92	92	92	92	92	92	91	90	89	87
	30	79	79	79	79	79	79	79	79	79	79	79	79	78
	40	70	70	70	70	70	70	70	70	70	70	70	70	70
	50	64	64	64	64	64	64	64	64	64	64	64	64	64
	60	59	59	59	59	59	59	59	59	59	59	59	59	59
	70	55	55	55	55	55	55	55	55	55	55	55	55	55
	80	52	52	52	52	52	52	52	52	52	52	52	52	52
	90	49	49	49	49	49	49	49	49	49	49	49	49	49
Zone 2r	0	111	111	111	111	111	111	111	111	108	100	91	84	77
	10	107	107	107	107	107	107	107	107	107	100	91	84	77
	20	92	92	92	92	92	92	92	92	92	91	90	84	77
	30	79	79	79	79	79	79	79	79	79	79	79	79	77
	40	70	70	70	70	70	70	70	70	70	70	70	70	70
	50	64	64	64	64	64	64	64	64	64	64	64	64	64
	60	59	59	59	59	59	59	59	59	59	59	59	59	59
	70	55	55	55	55	55	55	55	55	55	55	55	55	55
	80	52	52	52	52	52	52	52	52	52	52	52	52	52
	90	49	49	49	49	49	49	49	49	49	49	49	49	49
Zone 3	0	111	111	111	111	111	111	111	111	111	109	99	89	81
	10	107	107	107	107	107	107	107	107	107	107	99	89	81
	20	92	92	92	92	92	92	92	92	92	91	90	89	81
	30	79	79	79	79	79	79	79	79	79	79	79	79	78
	40	70	70	70	70	70	70	70	70	70	70	70	70	70
	50	64	64	64	64	64	64	64	64	64	64	64	64	64
	60	59	59	59	59	59	59	59	59	59	59	59	59	59
	70	55	55	55	55	55	55	55	55	55	55	55	55	55
	80	52	52	52	52	52	52	52	52	52	52	52	52	52
	90	49	49	49	49	49	49	49	49	49	49	49	49	49

Notes:

1. Tables are based on critical rail span for load combinations as specified in chapter 2 of the ASCE 7-16 and allowable design loads per the 2015 Aluminum Design Manual.
2. Panels are assumed to be in portrait orientation with a maximum length of 82"

Structural ENGINUITY INC
Ingenuity in Engineering

SUNMODO®

Max Rail Spans for SunModo SMR200 Rail System

Table 70b

Mean Roof Height: h ≤ 15 ft
Roof Angle: 27 < θ ≤ 45 degrees
Exposure Category: B
Panel Orientation: Portrait
North/South Support γ_E = 1.5
Roof Type : Hip

Roof Wind Zone	Ground Snow Load (psf)	Wind Speed (mph)												
		90	95	100	105	110	115	120	130	140	150	160	170	180
Zone 1	0	111	111	111	111	111	111	111	111	104	95	87	81	75
	10	107	107	107	107	107	107	107	107	104	95	87	81	75
	20	92	92	92	92	92	92	92	92	92	91	87	81	75
	30	79	79	79	79	79	79	79	79	79	79	79	79	75
	40	70	70	70	70	70	70	70	70	70	70	70	70	70
	50	64	64	64	64	64	64	64	64	64	64	64	64	64
	60	59	59	59	59	59	59	59	59	59	59	59	59	59
	70	55	55	55	55	55	55	55	55	55	55	55	55	55
	80	52	52	52	52	52	52	52	52	52	52	52	52	52
	90	49	49	49	49	49	49	49	49	49	49	49	49	49
Zone 2e	0	111	111	111	111	111	111	111	111	106	96	86	79	72
	10	107	107	107	107	107	107	107	107	106	96	86	79	72
	20	92	92	92	92	92	92	92	92	92	91	86	79	72
	30	79	79	79	79	79	79	79	79	79	79	79	79	72
	40	70	70	70	70	70	70	70	70	70	70	70	70	70
	50	64	64	64	64	64	64	64	64	64	64	64	64	64
	60	59	59	59	59	59	59	59	59	59	59	59	59	59
	70	55	55	55	55	55	55	55	55	55	55	55	55	55
	80	52	52	52	52	52	52	52	52	52	52	52	52	52
	90	49	49	49	49	49	49	49	49	49	49	49	49	49
Zone 2r	0	111	111	111	111	111	108	103	92	83	75	69	63	59
	10	107	107	107	107	107	107	103	92	83	75	69	63	59
	20	92	92	92	92	92	92	92	92	83	75	69	63	59
	30	79	79	79	79	79	79	79	79	79	75	69	63	59
	40	70	70	70	70	70	70	70	70	70	70	69	63	59
	50	64	64	64	64	64	64	64	64	64	64	64	63	59
	60	59	59	59	59	59	59	59	59	59	59	59	59	59
	70	55	55	55	55	55	55	55	55	55	55	55	55	55
	80	52	52	52	52	52	52	52	52	52	52	52	52	52
	90	49	49	49	49	49	49	49	49	49	49	49	49	49
Zone 3	0	111	111	111	111	111	111	111	100	88	78	71	64	59
	10	107	107	107	107	107	107	107	100	88	78	71	64	59
	20	92	92	92	92	92	92	92	92	88	78	71	64	59
	30	79	79	79	79	79	79	79	79	79	78	71	64	59
	40	70	70	70	70	70	70	70	70	70	70	70	64	59
	50	64	64	64	64	64	64	64	64	64	64	64	64	59
	60	59	59	59	59	59	59	59	59	59	59	59	59	59
	70	55	55	55	55	55	55	55	55	55	55	55	55	55
	80	52	52	52	52	52	52	52	52	52	52	52	52	52
	90	49	49	49	49	49	49	49	49	49	49	49	49	49

Notes:

1. Tables are based on critical rail span for load combinations as specified in chapter 2 of the ASCE 7-16 and allowable design loads per the 2015 Aluminum Design Manual.
2. Panels are assumed to be in portrait orientation with a maximum length of 82"

Structural ENGINUITY INC
Ingenuity in Engineering

SUNMODO®

Max Rail Spans for SunModo SMR200 Rail System

Table 71a

Mean Roof Height: h ≤ 15 ft
Roof Angle: 27 < θ ≤ 45 degrees
Exposure Category: C
Panel Orientation: Portrait
North/South Support Y_E = 1
Roof Type : Hip

Roof Wind Zone	Ground Snow Load (psf)	Wind Speed (mph)												
		90	95	100	105	110	115	120	130	140	150	160	170	180
Zone 1	0	111	111	111	111	111	111	111	111	104	95	87	81	75
	10	107	107	107	107	107	107	107	106	104	95	87	81	75
	20	92	92	92	92	92	92	91	90	88	87	85	81	75
	30	79	79	79	79	79	79	79	79	79	77	76	75	74
	40	70	70	70	70	70	70	70	70	70	70	70	69	68
	50	64	64	64	64	64	64	64	64	64	64	64	64	63
	60	59	59	59	59	59	59	59	59	59	59	59	59	59
	70	55	55	55	55	55	55	55	55	55	55	55	55	55
	80	52	52	52	52	52	52	52	52	52	52	52	52	52
	90	49	49	49	49	49	49	49	49	49	49	49	49	49
Zone 2e	0	111	111	111	111	111	111	111	111	107	96	87	79	72
	10	107	107	107	107	107	107	107	106	104	96	87	79	72
	20	92	92	92	92	92	92	91	90	88	87	85	79	72
	30	79	79	79	79	79	79	79	79	79	77	76	75	72
	40	70	70	70	70	70	70	70	70	70	70	70	69	68
	50	64	64	64	64	64	64	64	64	64	64	64	64	63
	60	59	59	59	59	59	59	59	59	59	59	59	59	59
	70	55	55	55	55	55	55	55	55	55	55	55	55	55
	80	52	52	52	52	52	52	52	52	52	52	52	52	52
	90	49	49	49	49	49	49	49	49	49	49	49	49	49
Zone 2r	0	111	111	111	111	111	108	103	92	83	75	69	64	59
	10	107	107	107	107	107	107	103	92	83	75	69	64	59
	20	92	92	92	92	92	92	91	90	83	75	69	64	59
	30	79	79	79	79	79	79	79	79	79	75	69	64	59
	40	70	70	70	70	70	70	70	70	70	70	69	64	59
	50	64	64	64	64	64	64	64	64	64	64	64	64	59
	60	59	59	59	59	59	59	59	59	59	59	59	59	59
	70	55	55	55	55	55	55	55	55	55	55	55	55	55
	80	52	52	52	52	52	52	52	52	52	52	52	52	52
	90	49	49	49	49	49	49	49	49	49	49	49	49	49
Zone 3	0	111	111	111	111	111	111	111	100	88	79	71	64	59
	10	107	107	107	107	107	107	107	100	88	79	71	64	59
	20	92	92	92	92	92	92	91	90	88	79	71	64	59
	30	79	79	79	79	79	79	79	79	79	77	71	64	59
	40	70	70	70	70	70	70	70	70	70	70	70	64	59
	50	64	64	64	64	64	64	64	64	64	64	64	64	59
	60	59	59	59	59	59	59	59	59	59	59	59	59	59
	70	55	55	55	55	55	55	55	55	55	55	55	55	55
	80	52	52	52	52	52	52	52	52	52	52	52	52	52
	90	49	49	49	49	49	49	49	49	49	49	49	49	49

Notes:

1. Tables are based on critical rail span for load combinations as specified in chapter 2 of the ASCE 7-16 and allowable design loads per the 2015 Aluminum Design Manual.
2. Panels are assumed to be in portrait orientation with a maximum length of 82"

Structural ENGINUITY INC
Ingenuity in Engineering

SUNMODO®

Max Rail Spans for SunModo SMR200 Rail System

Table 71b

Mean Roof Height: h ≤ 15 ft
Roof Angle: 27 < θ ≤ 45 degrees
Exposure Category: C
Panel Orientation: Portrait
North/South Support γ_E = 1.5
Roof Type : Hip

Roof Wind Zone	Ground Snow Load (psf)	Wind Speed (mph)												
		90	95	100	105	110	115	120	130	140	150	160	170	180
Zone 1	0	111	111	111	111	108	103	98	88	80	73	67	62	58
	10	107	107	107	107	107	103	98	88	80	73	67	62	58
	20	92	92	92	92	92	92	91	88	80	73	67	62	58
	30	79	79	79	79	79	79	79	79	79	73	67	62	58
	40	70	70	70	70	70	70	70	70	70	70	67	62	58
	50	64	64	64	64	64	64	64	64	64	64	64	62	58
	60	59	59	59	59	59	59	59	59	59	59	59	59	58
	70	55	55	55	55	55	55	55	55	55	55	55	55	55
	80	52	52	52	52	52	52	52	52	52	52	52	52	52
	90	49	49	49	49	49	49	49	49	49	49	49	49	49
Zone 2e	0	111	111	111	111	111	106	99	88	78	70	64	58	54
	10	107	107	107	107	107	106	99	88	78	70	64	58	54
	20	92	92	92	92	92	92	91	88	78	70	64	58	54
	30	79	79	79	79	79	79	79	79	78	70	64	58	54
	40	70	70	70	70	70	70	70	70	70	70	64	58	54
	50	64	64	64	64	64	64	64	64	64	64	64	58	54
	60	59	59	59	59	59	59	59	59	59	59	59	58	54
	70	55	55	55	55	55	55	55	55	55	55	55	55	54
	80	52	52	52	52	52	52	52	52	52	52	52	52	52
	90	49	49	49	49	49	49	49	49	49	49	49	49	49
Zone 2r	0	111	107	100	93	88	82	78	69	63	57	52	48	45
	10	107	107	100	93	88	82	78	69	63	57	52	48	45
	20	92	92	92	92	88	82	78	69	63	57	52	48	45
	30	79	79	79	79	79	79	78	69	63	57	52	48	45
	40	70	70	70	70	70	70	70	69	63	57	52	48	45
	50	64	64	64	64	64	64	64	64	63	57	52	48	45
	60	59	59	59	59	59	59	59	59	59	57	52	48	45
	70	55	55	55	55	55	55	55	55	55	55	52	48	45
	80	52	52	52	52	52	52	52	52	52	52	52	48	45
	90	49	49	49	49	49	49	49	49	49	49	49	48	45
Zone 3	0	111	111	109	102	94	87	81	72	64	57	52	47	43
	10	107	107	107	102	94	87	81	72	64	57	52	47	43
	20	92	92	92	92	92	87	81	72	64	57	52	47	43
	30	79	79	79	79	79	79	79	72	64	57	52	47	43
	40	70	70	70	70	70	70	70	70	64	57	52	47	43
	50	64	64	64	64	64	64	64	64	64	57	52	47	43
	60	59	59	59	59	59	59	59	59	59	57	52	47	43
	70	55	55	55	55	55	55	55	55	55	55	52	47	43
	80	52	52	52	52	52	52	52	52	52	52	52	47	43
	90	49	49	49	49	49	49	49	49	49	49	49	47	43

Notes:

1. Tables are based on critical rail span for load combinations as specified in chapter 2 of the ASCE 7-16 and allowable design loads per the 2015 Aluminum Design Manual.
2. Panels are assumed to be in portrait orientation with a maximum length of 82"

Structural ENGINUITY INC
Ingenuity in Engineering

SUNMODO®

Max Rail Spans for SunModo SMR200 Rail System

Table 72a

Mean Roof Height: h ≤ 15 ft
Roof Angle: 27 < θ ≤ 45 degrees
Exposure Category: D
Panel Orientation: Portrait
North/South Support Y_E = 1
Roof Type : Hip

Roof Wind Zone	Ground Snow Load (psf)	Wind Speed (mph)												
		90	95	100	105	110	115	120	130	140	150	160	170	180
Zone 1	0	111	111	111	111	111	111	110	101	92	84	77	71	66
	10	107	107	107	107	107	107	105	101	92	84	77	71	66
	20	92	92	92	92	91	91	90	88	86	84	77	71	66
	30	79	79	79	79	79	79	79	78	77	76	74	71	66
	40	70	70	70	70	70	70	70	70	70	69	68	67	66
	50	64	64	64	64	64	64	64	64	64	64	63	62	61
	60	59	59	59	59	59	59	59	59	59	59	59	58	58
	70	55	55	55	55	55	55	55	55	55	55	55	55	55
	80	52	52	52	52	52	52	52	52	52	52	52	52	52
	90	49	49	49	49	49	49	49	49	49	49	49	49	49
Zone 2e	0	111	111	111	111	111	111	111	104	92	83	75	68	63
	10	107	107	107	107	107	107	105	103	92	83	75	68	63
	20	92	92	92	92	91	91	90	88	86	83	75	68	63
	30	79	79	79	79	79	79	79	78	77	76	74	68	63
	40	70	70	70	70	70	70	70	70	70	69	68	67	63
	50	64	64	64	64	64	64	64	64	64	64	63	62	61
	60	59	59	59	59	59	59	59	59	59	59	59	58	58
	70	55	55	55	55	55	55	55	55	55	55	55	55	55
	80	52	52	52	52	52	52	52	52	52	52	52	52	52
	90	49	49	49	49	49	49	49	49	49	49	49	49	49
Zone 2r	0	111	111	111	107	102	96	90	81	73	66	61	56	52
	10	107	107	107	107	102	96	90	81	73	66	61	56	52
	20	92	92	92	92	91	91	90	81	73	66	61	56	52
	30	79	79	79	79	79	79	79	78	73	66	61	56	52
	40	70	70	70	70	70	70	70	70	70	66	61	56	52
	50	64	64	64	64	64	64	64	64	64	64	61	56	52
	60	59	59	59	59	59	59	59	59	59	59	59	56	52
	70	55	55	55	55	55	55	55	55	55	55	55	55	52
	80	52	52	52	52	52	52	52	52	52	52	52	52	52
	90	49	49	49	49	49	49	49	49	49	49	49	49	49
Zone 3	0	111	111	111	111	110	105	98	85	75	67	61	56	51
	10	107	107	107	107	107	105	98	85	75	67	61	56	51
	20	92	92	92	92	91	91	90	85	75	67	61	56	51
	30	79	79	79	79	79	79	79	78	75	67	61	56	51
	40	70	70	70	70	70	70	70	70	70	67	61	56	51
	50	64	64	64	64	64	64	64	64	64	64	61	56	51
	60	59	59	59	59	59	59	59	59	59	59	59	56	51
	70	55	55	55	55	55	55	55	55	55	55	55	55	51
	80	52	52	52	52	52	52	52	52	52	52	52	52	51
	90	49	49	49	49	49	49	49	49	49	49	49	49	49

Notes:

1. Tables are based on critical rail span for load combinations as specified in chapter 2 of the ASCE 7-16 and allowable design loads per the 2015 Aluminum Design Manual.
2. Panels are assumed to be in portrait orientation with a maximum length of 82"

Structural ENGINUITY INC
Ingenuity in Engineering

SUNMODO®

Max Rail Spans for SunModo SMR200 Rail System

Table 72b

Mean Roof Height: h ≤ 15 ft
Roof Angle: 27 < θ ≤ 45 degrees
Exposure Category: D
Panel Orientation: Portrait
North/South Support γ_E = 1.5
Roof Type : Hip

Roof Wind Zone	Ground Snow Load (psf)	Wind Speed (mph)												
		90	95	100	105	110	115	120	130	140	150	160	170	180
Zone 1	0	111	111	108	103	97	91	86	78	71	65	59	55	51
	10	107	107	107	103	97	91	86	78	71	65	59	55	51
	20	92	92	92	92	91	91	86	78	71	65	59	55	51
	30	79	79	79	79	79	79	79	78	71	65	59	55	51
	40	70	70	70	70	70	70	70	70	70	65	59	55	51
	50	64	64	64	64	64	64	64	64	64	64	59	55	51
	60	59	59	59	59	59	59	59	59	59	59	59	55	51
	70	55	55	55	55	55	55	55	55	55	55	55	55	51
	80	52	52	52	52	52	52	52	52	52	52	52	52	51
	90	49	49	49	49	49	49	49	49	49	49	49	49	49
Zone 2e	0	111	111	111	105	98	91	85	75	67	61	55	51	47
	10	107	107	107	105	98	91	85	75	67	61	55	51	47
	20	92	92	92	92	91	91	85	75	67	61	55	51	47
	30	79	79	79	79	79	79	79	75	67	61	55	51	47
	40	70	70	70	70	70	70	70	70	67	61	55	51	47
	50	64	64	64	64	64	64	64	64	64	61	55	51	47
	60	59	59	59	59	59	59	59	59	59	59	55	51	47
	70	55	55	55	55	55	55	55	55	55	55	55	51	47
	80	52	52	52	52	52	52	52	52	52	52	52	51	47
	90	49	49	49	49	49	49	49	49	49	49	49	49	47
Zone 2r	0	101	94	87	82	77	72	68	61	55	50	46	42	39
	10	101	94	87	82	77	72	68	61	55	50	46	42	39
	20	92	92	87	82	77	72	68	61	55	50	46	42	39
	30	79	79	79	79	77	72	68	61	55	50	46	42	39
	40	70	70	70	70	70	70	68	61	55	50	46	42	39
	50	64	64	64	64	64	64	64	61	55	50	46	42	39
	60	59	59	59	59	59	59	59	59	55	50	46	42	39
	70	55	55	55	55	55	55	55	55	55	50	46	42	39
	80	52	52	52	52	52	52	52	52	52	50	46	42	39
	90	49	49	49	49	49	49	49	49	49	49	46	42	39
Zone 3	0	110	103	94	87	80	75	70	61	55	49	45	41	38
	10	107	103	94	87	80	75	70	61	55	49	45	41	38
	20	92	92	92	87	80	75	70	61	55	49	45	41	38
	30	79	79	79	79	79	75	70	61	55	49	45	41	38
	40	70	70	70	70	70	70	70	61	55	49	45	41	38
	50	64	64	64	64	64	64	64	61	55	49	45	41	38
	60	59	59	59	59	59	59	59	59	55	49	45	41	38
	70	55	55	55	55	55	55	55	55	55	49	45	41	38
	80	52	52	52	52	52	52	52	52	52	49	45	41	38
	90	49	49	49	49	49	49	49	49	49	49	45	41	38

Notes:

1. Tables are based on critical rail span for load combinations as specified in chapter 2 of the ASCE 7-16 and allowable design loads per the 2015 Aluminum Design Manual.
2. Panels are assumed to be in portrait orientation with a maximum length of 82"

Structural ENGINUITY INC
Ingenuity in Engineering

SUNMODO®

Max Rail Spans for SunModo SMR200 Rail System

Table 73a

Mean Roof Height: 15 < h ≤ 30 ft
Roof Angle: 0 < θ ≤ 7 degrees
Exposure Category: B
Panel Orientation: Portrait
North/South Support Y_E = 1
Roof Type : Gable

Roof Wind Zone	Ground Snow Load (psf)	Wind Speed (mph)												
		90	95	100	105	110	115	120	130	140	150	160	170	180
Zone 1'	0	111	111	111	111	111	111	111	111	111	111	111	111	106
	10	104	104	104	104	104	104	104	104	104	104	104	104	103
	20	81	81	81	81	81	81	81	81	81	81	81	81	81
	30	79	79	79	79	79	79	79	79	79	79	79	79	79
	40	70	70	70	70	70	70	70	70	70	70	70	70	70
	50	63	63	63	63	63	63	63	63	63	63	63	63	63
	60	58	58	58	58	58	58	58	58	58	58	58	58	58
	70	54	54	54	54	54	54	54	54	54	54	54	54	54
	80	51	51	51	51	51	51	51	51	51	51	51	51	51
	90	48	48	48	48	48	48	48	48	48	48	48	48	48
Zone 1	0	111	111	111	111	111	111	111	111	106	99	94	86	80
	10	104	104	104	104	104	104	104	104	104	99	94	86	80
	20	81	81	81	81	81	81	81	81	81	81	81	81	80
	30	79	79	79	79	79	79	79	79	79	79	79	79	79
	40	70	70	70	70	70	70	70	70	70	70	70	70	70
	50	63	63	63	63	63	63	63	63	63	63	63	63	63
	60	58	58	58	58	58	58	58	58	58	58	58	58	58
	70	54	54	54	54	54	54	54	54	54	54	54	54	54
	80	51	51	51	51	51	51	51	51	51	51	51	51	51
	90	48	48	48	48	48	48	48	48	48	48	48	48	48
Zone 2	0	111	111	111	111	111	110	106	98	91	83	76	70	65
	10	104	104	104	104	104	104	104	98	91	83	76	70	65
	20	81	81	81	81	81	81	81	81	81	81	76	70	65
	30	79	79	79	79	79	79	79	79	79	79	76	70	65
	40	70	70	70	70	70	70	70	70	70	70	70	70	65
	50	63	63	63	63	63	63	63	63	63	63	63	63	63
	60	58	58	58	58	58	58	58	58	58	58	58	58	58
	70	54	54	54	54	54	54	54	54	54	54	54	54	54
	80	51	51	51	51	51	51	51	51	51	51	51	51	51
	90	48	48	48	48	48	48	48	48	48	48	48	48	48
Zone 3	0	111	111	110	105	101	97	93	83	75	68	62	57	53
	10	104	104	104	104	101	97	93	83	75	68	62	57	53
	20	81	81	81	81	81	81	81	81	75	68	62	57	53
	30	79	79	79	79	79	79	79	79	75	68	62	57	53
	40	70	70	70	70	70	70	70	70	70	68	62	57	53
	50	63	63	63	63	63	63	63	63	63	63	62	57	53
	60	58	58	58	58	58	58	58	58	58	58	58	57	53
	70	54	54	54	54	54	54	54	54	54	54	54	54	53
	80	51	51	51	51	51	51	51	51	51	51	51	51	51
	90	48	48	48	48	48	48	48	48	48	48	48	48	48

Notes:

1. Tables are based on critical rail span for load combinations as specified in chapter 2 of the ASCE 7-16 and allowable design loads per the 2015 Aluminum Design Manual.
2. Panels are assumed to be in portrait orientation with a maximum length of 82"

Structural ENGINUITY INC
Ingenuity in Engineering

SUNMODO®

Max Rail Spans for SunModo SMR200 Rail System

Table 73b

Mean Roof Height: 15 < h ≤ 30 ft
Roof Angle: 0 < θ ≤ 7 degrees
Exposure Category: B
Panel Orientation: Portrait
North/South Support γ_E = 1.5
Roof Type : Gable

Roof Wind Zone	Ground Snow Load (psf)	Wind Speed (mph)												
		90	95	100	105	110	115	120	130	140	150	160	170	180
Zone 1'	0	111	111	111	111	111	111	111	111	111	104	98	94	87
	10	104	104	104	104	104	104	104	104	104	104	98	94	87
	20	81	81	81	81	81	81	81	81	81	81	81	81	81
	30	79	79	79	79	79	79	79	79	79	79	79	79	79
	40	70	70	70	70	70	70	70	70	70	70	70	70	70
	50	63	63	63	63	63	63	63	63	63	63	63	63	63
	60	58	58	58	58	58	58	58	58	58	58	58	58	58
	70	54	54	54	54	54	54	54	54	54	54	54	54	54
	80	51	51	51	51	51	51	51	51	51	51	51	51	51
	90	48	48	48	48	48	48	48	48	48	48	48	48	48
Zone 1	0	111	111	111	111	109	105	101	94	85	78	71	66	61
	10	104	104	104	104	104	104	101	94	85	78	71	66	61
	20	81	81	81	81	81	81	81	81	81	78	71	66	61
	30	79	79	79	79	79	79	79	79	79	78	71	66	61
	40	70	70	70	70	70	70	70	70	70	70	70	66	61
	50	63	63	63	63	63	63	63	63	63	63	63	63	61
	60	58	58	58	58	58	58	58	58	58	58	58	58	58
	70	54	54	54	54	54	54	54	54	54	54	54	54	54
	80	51	51	51	51	51	51	51	51	51	51	51	51	51
	90	48	48	48	48	48	48	48	48	48	48	48	48	48
Zone 2	0	111	109	104	99	95	90	85	76	69	63	58	54	50
	10	104	104	104	99	95	90	85	76	69	63	58	54	50
	20	81	81	81	81	81	81	81	76	69	63	58	54	50
	30	79	79	79	79	79	79	79	76	69	63	58	54	50
	40	70	70	70	70	70	70	70	70	69	63	58	54	50
	50	63	63	63	63	63	63	63	63	63	63	58	54	50
	60	58	58	58	58	58	58	58	58	58	58	58	54	50
	70	54	54	54	54	54	54	54	54	54	54	54	54	50
	80	51	51	51	51	51	51	51	51	51	51	51	51	50
	90	48	48	48	48	48	48	48	48	48	48	48	48	48
Zone 3	0	100	96	90	84	79	74	70	63	57	52	48	44	41
	10	100	96	90	84	79	74	70	63	57	52	48	44	41
	20	81	81	81	81	79	74	70	63	57	52	48	44	41
	30	79	79	79	79	79	74	70	63	57	52	48	44	41
	40	70	70	70	70	70	70	70	63	57	52	48	44	41
	50	63	63	63	63	63	63	63	63	57	52	48	44	41
	60	58	58	58	58	58	58	58	58	57	52	48	44	41
	70	54	54	54	54	54	54	54	54	54	52	48	44	41
	80	51	51	51	51	51	51	51	51	51	51	48	44	41
	90	48	48	48	48	48	48	48	48	48	48	48	44	41

Notes:

1. Tables are based on critical rail span for load combinations as specified in chapter 2 of the ASCE 7-16 and allowable design loads per the 2015 Aluminum Design Manual.
2. Panels are assumed to be in portrait orientation with a maximum length of 82"

Structural ENGINUITY INC
Ingenuity in Engineering

SUNMODO®

Max Rail Spans for SunModo SMR200 Rail System

Table 74a

Mean Roof Height: 15 < h ≤ 30 ft
Roof Angle: 0 < θ ≤ 7 degrees
Exposure Category: C
Panel Orientation: Portrait
North/South Support Y_E = 1
Roof Type : Gable

Roof Wind Zone	Ground Snow Load (psf)	Wind Speed (mph)												
		90	95	100	105	110	115	120	130	140	150	160	170	180
Zone 1'	0	111	111	111	111	111	111	111	111	111	107	101	96	91
	10	104	104	104	104	104	104	104	104	104	103	101	96	91
	20	81	81	81	81	81	81	81	81	81	81	81	81	81
	30	79	79	79	79	79	79	79	79	79	79	79	79	79
	40	70	70	70	70	70	70	70	70	70	70	70	70	70
	50	63	63	63	63	63	63	63	63	63	63	63	63	63
	60	58	58	58	58	58	58	58	58	58	58	58	58	58
	70	54	54	54	54	54	54	54	54	54	54	54	54	54
	80	51	51	51	51	51	51	51	51	51	51	51	51	51
	90	48	48	48	48	48	48	48	48	48	48	48	48	48
Zone 1	0	111	111	111	111	111	108	104	97	89	81	74	69	64
	10	104	104	104	104	104	104	104	97	89	81	74	69	64
	20	81	81	81	81	81	81	81	81	81	81	74	69	64
	30	79	79	79	79	79	79	79	79	79	79	74	69	64
	40	70	70	70	70	70	70	70	70	70	70	70	69	64
	50	63	63	63	63	63	63	63	63	63	63	63	63	63
	60	58	58	58	58	58	58	58	58	58	58	58	58	58
	70	54	54	54	54	54	54	54	54	54	54	54	54	54
	80	51	51	51	51	51	51	51	51	51	51	51	51	51
	90	48	48	48	48	48	48	48	48	48	48	48	48	48
Zone 2	0	111	111	107	102	98	94	89	80	73	66	61	56	52
	10	104	104	104	102	98	94	89	80	73	66	61	56	52
	20	81	81	81	81	81	81	81	80	73	66	61	56	52
	30	79	79	79	79	79	79	79	79	73	66	61	56	52
	40	70	70	70	70	70	70	70	70	70	66	61	56	52
	50	63	63	63	63	63	63	63	63	63	63	61	56	52
	60	58	58	58	58	58	58	58	58	58	58	58	56	52
	70	54	54	54	54	54	54	54	54	54	54	54	54	52
	80	51	51	51	51	51	51	51	51	51	51	51	51	51
	90	48	48	48	48	48	48	48	48	48	48	48	48	48
Zone 3	0	104	99	94	88	83	78	73	66	59	54	50	46	43
	10	104	99	94	88	83	78	73	66	59	54	50	46	43
	20	81	81	81	81	81	78	73	66	59	54	50	46	43
	30	79	79	79	79	79	78	73	66	59	54	50	46	43
	40	70	70	70	70	70	70	70	66	59	54	50	46	43
	50	63	63	63	63	63	63	63	63	59	54	50	46	43
	60	58	58	58	58	58	58	58	58	58	54	50	46	43
	70	54	54	54	54	54	54	54	54	54	54	50	46	43
	80	51	51	51	51	51	51	51	51	51	51	50	46	43
	90	48	48	48	48	48	48	48	48	48	48	48	46	43

Notes:

1. Tables are based on critical rail span for load combinations as specified in chapter 2 of the ASCE 7-16 and allowable design loads per the 2015 Aluminum Design Manual.
2. Panels are assumed to be in portrait orientation with a maximum length of 82"

Structural ENGINUITY INC
Ingenuity in Engineering

SUNMODO®

Max Rail Spans for SunModo SMR200 Rail System

Table 74b

Mean Roof Height: 15 < h ≤ 30 ft
Roof Angle: 0 < θ ≤ 7 degrees
Exposure Category: C
Panel Orientation: Portrait
North/South Support γ_E = 1.5
Roof Type : Gable

Roof Wind Zone	Ground Snow Load (psf)	Wind Speed (mph)												
		90	95	100	105	110	115	120	130	140	150	160	170	180
Zone 1'	0	111	111	111	111	111	111	109	102	96	89	82	76	70
	10	104	104	104	104	104	104	104	102	96	89	82	76	70
	20	81	81	81	81	81	81	81	81	81	81	81	76	70
	30	79	79	79	79	79	79	79	79	79	79	79	76	70
	40	70	70	70	70	70	70	70	70	70	70	70	70	70
	50	63	63	63	63	63	63	63	63	63	63	63	63	63
	60	58	58	58	58	58	58	58	58	58	58	58	58	58
	70	54	54	54	54	54	54	54	54	54	54	54	54	54
	80	51	51	51	51	51	51	51	51	51	51	51	51	51
	90	48	48	48	48	48	48	48	48	48	48	48	48	48
Zone 1	0	111	107	102	98	94	89	84	75	68	62	57	53	49
	10	104	104	102	98	94	89	84	75	68	62	57	53	49
	20	81	81	81	81	81	81	81	75	68	62	57	53	49
	30	79	79	79	79	79	79	79	75	68	62	57	53	49
	40	70	70	70	70	70	70	70	70	68	62	57	53	49
	50	63	63	63	63	63	63	63	63	63	62	57	53	49
	60	58	58	58	58	58	58	58	58	58	58	57	53	49
	70	54	54	54	54	54	54	54	54	54	54	54	53	49
	80	51	51	51	51	51	51	51	51	51	51	51	51	49
	90	48	48	48	48	48	48	48	48	48	48	48	48	48
Zone 2	0	98	93	87	81	76	72	68	61	56	51	47	44	41
	10	98	93	87	81	76	72	68	61	56	51	47	44	41
	20	81	81	81	81	76	72	68	61	56	51	47	44	41
	30	79	79	79	79	76	72	68	61	56	51	47	44	41
	40	70	70	70	70	70	70	68	61	56	51	47	44	41
	50	63	63	63	63	63	63	63	61	56	51	47	44	41
	60	58	58	58	58	58	58	58	58	56	51	47	44	41
	70	54	54	54	54	54	54	54	54	54	51	47	44	41
	80	51	51	51	51	51	51	51	51	51	51	47	44	41
	90	48	48	48	48	48	48	48	48	48	48	47	44	41
Zone 3	0	82	76	71	67	63	59	56	50	46	42	38	36	33
	10	82	76	71	67	63	59	56	50	46	42	38	36	33
	20	81	76	71	67	63	59	56	50	46	42	38	36	33
	30	79	76	71	67	63	59	56	50	46	42	38	36	33
	40	70	70	70	67	63	59	56	50	46	42	38	36	33
	50	63	63	63	63	63	59	56	50	46	42	38	36	33
	60	58	58	58	58	58	58	56	50	46	42	38	36	33
	70	54	54	54	54	54	54	54	50	46	42	38	36	33
	80	51	51	51	51	51	51	51	50	46	42	38	36	33
	90	48	48	48	48	48	48	48	48	46	42	38	36	33

Notes:

1. Tables are based on critical rail span for load combinations as specified in chapter 2 of the ASCE 7-16 and allowable design loads per the 2015 Aluminum Design Manual.
2. Panels are assumed to be in portrait orientation with a maximum length of 82"

Structural ENGINUITY INC
Ingenuity in Engineering

SUNMODO®

Max Rail Spans for SunModo SMR200 Rail System

Table 75a

Mean Roof Height: 15 < h ≤ 30 ft
Roof Angle: 0 < θ ≤ 7 degrees
Exposure Category: D
Panel Orientation: Portrait
North/South Support Y_E = 1
Roof Type : Gable

Roof Wind Zone	Ground Snow Load (psf)	Wind Speed (mph)												
		90	95	100	105	110	115	120	130	140	150	160	170	180
Zone 1'	0	111	111	111	111	111	111	111	111	106	100	94	88	82
	10	104	104	104	104	104	104	104	104	103	100	94	88	82
	20	81	81	81	81	81	81	81	81	81	81	81	81	80
	30	79	79	79	79	79	79	79	79	79	79	79	79	79
	40	70	70	70	70	70	70	70	70	70	70	70	70	70
	50	63	63	63	63	63	63	63	63	63	63	63	63	63
	60	58	58	58	58	58	58	58	58	58	58	58	58	58
	70	54	54	54	54	54	54	54	54	54	54	54	54	54
	80	51	51	51	51	51	51	51	51	51	51	51	51	51
	90	48	48	48	48	48	48	48	48	48	48	48	48	48
Zone 1	0	111	111	111	109	104	100	96	88	80	73	67	62	57
	10	104	104	104	104	104	100	96	88	80	73	67	62	57
	20	81	81	81	81	81	81	81	81	80	73	67	62	57
	30	79	79	79	79	79	79	79	79	79	73	67	62	57
	40	70	70	70	70	70	70	70	70	70	70	67	62	57
	50	63	63	63	63	63	63	63	63	63	63	63	62	57
	60	58	58	58	58	58	58	58	58	58	58	58	58	57
	70	54	54	54	54	54	54	54	54	54	54	54	54	54
	80	51	51	51	51	51	51	51	51	51	51	51	51	51
	90	48	48	48	48	48	48	48	48	48	48	48	48	48
Zone 2	0	109	104	99	95	90	84	80	72	65	59	55	51	47
	10	104	104	99	95	90	84	80	72	65	59	55	51	47
	20	81	81	81	81	81	81	80	72	65	59	55	51	47
	30	79	79	79	79	79	79	79	72	65	59	55	51	47
	40	70	70	70	70	70	70	70	70	65	59	55	51	47
	50	63	63	63	63	63	63	63	63	63	59	55	51	47
	60	58	58	58	58	58	58	58	58	58	58	55	51	47
	70	54	54	54	54	54	54	54	54	54	54	54	51	47
	80	51	51	51	51	51	51	51	51	51	51	51	51	47
	90	48	48	48	48	48	48	48	48	48	48	48	48	47
Zone 3	0	96	90	84	78	73	69	65	59	53	49	45	41	39
	10	96	90	84	78	73	69	65	59	53	49	45	41	39
	20	81	81	81	78	73	69	65	59	53	49	45	41	39
	30	79	79	79	78	73	69	65	59	53	49	45	41	39
	40	70	70	70	70	70	69	65	59	53	49	45	41	39
	50	63	63	63	63	63	63	63	59	53	49	45	41	39
	60	58	58	58	58	58	58	58	58	53	49	45	41	39
	70	54	54	54	54	54	54	54	54	53	49	45	41	39
	80	51	51	51	51	51	51	51	51	51	49	45	41	39
	90	48	48	48	48	48	48	48	48	48	48	45	41	39

Notes:

1. Tables are based on critical rail span for load combinations as specified in chapter 2 of the ASCE 7-16 and allowable design loads per the 2015 Aluminum Design Manual.
2. Panels are assumed to be in portrait orientation with a maximum length of 82"

Structural ENGINUITY INC
Ingenuity in Engineering

SUNMODO®

Max Rail Spans for SunModo SMR200 Rail System

Table 75b

Mean Roof Height: 15 < h ≤ 30 ft
Roof Angle: 0 < θ ≤ 7 degrees
Exposure Category: D
Panel Orientation: Portrait
North/South Support γ_E = 1.5
Roof Type : Gable

Roof Wind Zone	Ground Snow Load (psf)	Wind Speed (mph)												
		90	95	100	105	110	115	120	130	140	150	160	170	180
Zone 1'	0	111	111	111	111	110	105	101	95	87	80	73	68	64
	10	104	104	104	104	104	104	101	95	87	80	73	68	64
	20	81	81	81	81	81	81	81	81	81	80	73	68	64
	30	79	79	79	79	79	79	79	79	79	79	73	68	64
	40	70	70	70	70	70	70	70	70	70	70	70	68	64
	50	63	63	63	63	63	63	63	63	63	63	63	63	63
	60	58	58	58	58	58	58	58	58	58	58	58	58	58
	70	54	54	54	54	54	54	54	54	54	54	54	54	54
	80	51	51	51	51	51	51	51	51	51	51	51	51	51
	90	48	48	48	48	48	48	48	48	48	48	48	48	48
Zone 1	0	104	99	95	89	84	79	75	67	61	56	51	48	44
	10	104	99	95	89	84	79	75	67	61	56	51	48	44
	20	81	81	81	81	81	79	75	67	61	56	51	48	44
	30	79	79	79	79	79	79	75	67	61	56	51	48	44
	40	70	70	70	70	70	70	70	67	61	56	51	48	44
	50	63	63	63	63	63	63	63	63	61	56	51	48	44
	60	58	58	58	58	58	58	58	58	58	56	51	48	44
	70	54	54	54	54	54	54	54	54	54	54	51	48	44
	80	51	51	51	51	51	51	51	51	51	51	51	48	44
	90	48	48	48	48	48	48	48	48	48	48	48	48	44
Zone 2	0	89	83	77	73	68	64	61	55	50	46	42	39	37
	10	89	83	77	73	68	64	61	55	50	46	42	39	37
	20	81	81	77	73	68	64	61	55	50	46	42	39	37
	30	79	79	77	73	68	64	61	55	50	46	42	39	37
	40	70	70	70	70	68	64	61	55	50	46	42	39	37
	50	63	63	63	63	63	63	61	55	50	46	42	39	37
	60	58	58	58	58	58	58	58	55	50	46	42	39	37
	70	54	54	54	54	54	54	54	54	50	46	42	39	37
	80	51	51	51	51	51	51	51	51	50	46	42	39	37
	90	48	48	48	48	48	48	48	48	48	46	42	39	37
Zone 3	0	73	68	63	59	56	53	50	45	41	38	35	33	31
	10	73	68	63	59	56	53	50	45	41	38	35	33	31
	20	73	68	63	59	56	53	50	45	41	38	35	33	31
	30	73	68	63	59	56	53	50	45	41	38	35	33	31
	40	70	68	63	59	56	53	50	45	41	38	35	33	31
	50	63	63	63	59	56	53	50	45	41	38	35	33	31
	60	58	58	58	58	56	53	50	45	41	38	35	33	31
	70	54	54	54	54	54	53	50	45	41	38	35	33	31
	80	51	51	51	51	51	51	50	45	41	38	35	33	31
	90	48	48	48	48	48	48	48	45	41	38	35	33	31

Notes:

1. Tables are based on critical rail span for load combinations as specified in chapter 2 of the ASCE 7-16 and allowable design loads per the 2015 Aluminum Design Manual.
2. Panels are assumed to be in portrait orientation with a maximum length of 82"

Structural ENGINUITY INC
Ingenuity in Engineering

SUNMODO®

Max Rail Spans for SunModo SMR200 Rail System

Table 76a

Mean Roof Height: 15 < h ≤ 30 ft
Roof Angle: 7 < θ ≤ 20 degrees
Exposure Category: B
Panel Orientation: Portrait
North/South Support $\gamma_E = 1$
Roof Type : Gable

Roof Wind Zone	Ground Snow Load (psf)	Wind Speed (mph)												
		90	95	100	105	110	115	120	130	140	150	160	170	180
Zones 1 & 2e	0	111	111	111	111	111	111	111	110	101	91	81	73	67
	10	97	97	97	97	97	97	97	97	97	91	81	73	67
	20	74	74	74	74	74	74	74	74	74	74	74	73	67
	30	74	74	74	74	74	74	74	74	74	74	74	73	67
	40	66	66	66	66	66	66	66	66	66	66	66	66	66
	50	60	60	60	60	60	60	60	60	60	60	60	60	60
	60	55	55	55	55	55	55	55	55	55	55	55	55	55
	70	51	51	51	51	51	51	51	51	51	51	51	51	51
	80	48	48	48	48	48	48	48	48	48	48	48	48	48
	90	45	45	45	45	45	45	45	45	45	45	45	45	45
Zones 2n, 2r, & 3e	0	111	111	111	111	108	103	99	89	80	73	66	61	56
	10	97	97	97	97	97	97	97	89	80	73	66	61	56
	20	74	74	74	74	74	74	74	74	74	73	66	61	56
	30	74	74	74	74	74	74	74	74	74	73	66	61	56
	40	66	66	66	66	66	66	66	66	66	66	66	61	56
	50	60	60	60	60	60	60	60	60	60	60	60	60	56
	60	55	55	55	55	55	55	55	55	55	55	55	55	55
	70	51	51	51	51	51	51	51	51	51	51	51	51	51
	80	48	48	48	48	48	48	48	48	48	48	48	48	48
	90	45	45	45	45	45	45	45	45	45	45	45	45	45
Zone 3r	0	111	111	109	104	99	94	88	79	71	64	59	54	50
	10	97	97	97	97	97	94	88	79	71	64	59	54	50
	20	74	74	74	74	74	74	74	74	71	64	59	54	50
	30	74	74	74	74	74	74	74	74	71	64	59	54	50
	40	66	66	66	66	66	66	66	66	66	64	59	54	50
	50	60	60	60	60	60	60	60	60	60	60	59	54	50
	60	55	55	55	55	55	55	55	55	55	55	55	54	50
	70	51	51	51	51	51	51	51	51	51	51	51	51	50
	80	48	48	48	48	48	48	48	48	48	48	48	48	48
	90	45	45	45	45	45	45	45	45	45	45	45	45	45

Notes:

1. Tables are based on critical rail span for load combinations as specified in chapter 2 of the ASCE 7-16 and allowable design loads per the 2015 Aluminum Design Manual.
2. Panels are assumed to be in portrait orientation with a maximum length of 82"

Structural ENGINUITY INC
Ingenuity in Engineering

SUNMODO®

Max Rail Spans for SunModo SMR200 Rail System

Table 76b

Mean Roof Height: 15 < h ≤ 30 ft
Roof Angle: 7 < θ ≤ 20 degrees
Exposure Category: B
Panel Orientation: Portrait
North/South Support γ_E = 1.5
Roof Type : Gable

Roof Wind Zone	Ground Snow Load (psf)	Wind Speed (mph)												
		90	95	100	105	110	115	120	130	140	150	160	170	180
Zones 1 & 2e	0	111	111	111	111	105	100	95	82	72	66	61	57	53
	10	97	97	97	97	97	97	95	82	72	66	61	57	53
	20	74	74	74	74	74	74	74	74	72	66	61	57	53
	30	74	74	74	74	74	74	74	74	72	66	61	57	53
	40	66	66	66	66	66	66	66	66	66	66	61	57	53
	50	60	60	60	60	60	60	60	60	60	60	60	57	53
	60	55	55	55	55	55	55	55	55	55	55	55	55	53
	70	51	51	51	51	51	51	51	51	51	51	51	51	51
	80	48	48	48	48	48	48	48	48	48	48	48	48	48
	90	45	45	45	45	45	45	45	45	45	45	45	45	45
Zones 2n, 2r, & 3e	0	108	102	97	91	85	79	75	67	60	55	50	46	43
	10	97	97	97	91	85	79	75	67	60	55	50	46	43
	20	74	74	74	74	74	74	74	67	60	55	50	46	43
	30	74	74	74	74	74	74	74	67	60	55	50	46	43
	40	66	66	66	66	66	66	66	66	60	55	50	46	43
	50	60	60	60	60	60	60	60	60	60	55	50	46	43
	60	55	55	55	55	55	55	55	55	55	55	50	46	43
	70	51	51	51	51	51	51	51	51	51	51	50	46	43
	80	48	48	48	48	48	48	48	48	48	48	48	46	43
	90	45	45	45	45	45	45	45	45	45	45	45	45	43
Zone 3r	0	99	93	86	80	75	70	66	59	53	49	45	41	38
	10	97	93	86	80	75	70	66	59	53	49	45	41	38
	20	74	74	74	74	74	70	66	59	53	49	45	41	38
	30	74	74	74	74	74	70	66	59	53	49	45	41	38
	40	66	66	66	66	66	66	66	59	53	49	45	41	38
	50	60	60	60	60	60	60	60	59	53	49	45	41	38
	60	55	55	55	55	55	55	55	55	53	49	45	41	38
	70	51	51	51	51	51	51	51	51	51	49	45	41	38
	80	48	48	48	48	48	48	48	48	48	48	45	41	38
	90	45	45	45	45	45	45	45	45	45	45	45	41	38

Notes:

1. Tables are based on critical rail span for load combinations as specified in chapter 2 of the ASCE 7-16 and allowable design loads per the 2015 Aluminum Design Manual.
2. Panels are assumed to be in portrait orientation with a maximum length of 82"

Structural ENGINUITY INC
Ingenuity in Engineering

SUNMODO®

Max Rail Spans for SunModo SMR200 Rail System

Table 77a

Mean Roof Height: 15 < h ≤ 30 ft
Roof Angle: 7 < θ ≤ 20 degrees
Exposure Category: C
Panel Orientation: Portrait
North/South Support Y_E = 1
Roof Type : Gable

Roof Wind Zone	Ground Snow Load (psf)	Wind Speed (mph)												
		90	95	100	105	110	115	120	130	140	150	160	170	180
Zones 1 & 2e	0	111	111	111	111	110	104	99	87	76	68	63	59	55
	10	97	97	97	97	97	97	97	87	76	68	63	59	55
	20	74	74	74	74	74	74	74	74	74	68	63	59	55
	30	74	74	74	74	74	74	74	74	74	68	63	59	55
	40	66	66	66	66	66	66	66	66	66	66	63	59	55
	50	60	60	60	60	60	60	60	60	60	60	60	59	55
	60	55	55	55	55	55	55	55	55	55	55	55	55	55
	70	51	51	51	51	51	51	51	51	51	51	51	51	51
	80	48	48	48	48	48	48	48	48	48	48	48	48	48
	90	45	45	45	45	45	45	45	45	45	45	45	45	45
Zones 2n, 2r, & 3e	0	111	105	100	95	89	83	78	70	63	57	53	48	45
	10	97	97	97	95	89	83	78	70	63	57	53	48	45
	20	74	74	74	74	74	74	74	70	63	57	53	48	45
	30	74	74	74	74	74	74	74	70	63	57	53	48	45
	40	66	66	66	66	66	66	66	66	63	57	53	48	45
	50	60	60	60	60	60	60	60	60	60	57	53	48	45
	60	55	55	55	55	55	55	55	55	55	55	53	48	45
	70	51	51	51	51	51	51	51	51	51	51	51	48	45
	80	48	48	48	48	48	48	48	48	48	48	48	48	45
	90	45	45	45	45	45	45	45	45	45	45	45	45	45
Zone 3r	0	102	97	90	84	78	74	69	62	56	51	47	43	40
	10	97	97	90	84	78	74	69	62	56	51	47	43	40
	20	74	74	74	74	74	74	69	62	56	51	47	43	40
	30	74	74	74	74	74	74	69	62	56	51	47	43	40
	40	66	66	66	66	66	66	66	62	56	51	47	43	40
	50	60	60	60	60	60	60	60	60	56	51	47	43	40
	60	55	55	55	55	55	55	55	55	55	51	47	43	40
	70	51	51	51	51	51	51	51	51	51	51	47	43	40
	80	48	48	48	48	48	48	48	48	48	48	47	43	40
	90	45	45	45	45	45	45	45	45	45	45	45	43	40

Notes:

1. Tables are based on critical rail span for load combinations as specified in chapter 2 of the ASCE 7-16 and allowable design loads per the 2015 Aluminum Design Manual.
2. Panels are assumed to be in portrait orientation with a maximum length of 82"

Structural ENGINUITY INC
Ingenuity in Engineering

SUNMODO®

Max Rail Spans for SunModo SMR200 Rail System

Table 77b

Mean Roof Height: 15 < h ≤ 30 ft
Roof Angle: 7 < θ ≤ 20 degrees
Exposure Category: C
Panel Orientation: Portrait
North/South Support γ_E = 1.5
Roof Type : Gable

Roof Wind Zone	Ground Snow Load (psf)	Wind Speed (mph)												
		90	95	100	105	110	115	120	130	140	150	160	170	180
Zones 1 & 2e	0	109	103	97	89	82	76	70	64	58	54	50	47	44
	10	97	97	97	89	82	76	70	64	58	54	50	47	44
	20	74	74	74	74	74	74	70	64	58	54	50	47	44
	30	74	74	74	74	74	74	70	64	58	54	50	47	44
	40	66	66	66	66	66	66	66	64	58	54	50	47	44
	50	60	60	60	60	60	60	60	60	58	54	50	47	44
	60	55	55	55	55	55	55	55	55	55	54	50	47	44
	70	51	51	51	51	51	51	51	51	51	51	50	47	44
	80	48	48	48	48	48	48	48	48	48	48	48	47	44
	90	45	45	45	45	45	45	45	45	45	45	45	45	44
Zones 2n, 2r, & 3e	0	89	82	76	71	67	63	59	53	48	44	40	37	34
	10	89	82	76	71	67	63	59	53	48	44	40	37	34
	20	74	74	74	71	67	63	59	53	48	44	40	37	34
	30	74	74	74	71	67	63	59	53	48	44	40	37	34
	40	66	66	66	66	66	63	59	53	48	44	40	37	34
	50	60	60	60	60	60	60	59	53	48	44	40	37	34
	60	55	55	55	55	55	55	55	53	48	44	40	37	34
	70	51	51	51	51	51	51	51	51	48	44	40	37	34
	80	48	48	48	48	48	48	48	48	48	44	40	37	34
	90	45	45	45	45	45	45	45	45	45	44	40	37	34
Zone 3r	0	78	72	67	63	59	55	52	47	43	39	36	33	31
	10	78	72	67	63	59	55	52	47	43	39	36	33	31
	20	74	72	67	63	59	55	52	47	43	39	36	33	31
	30	74	72	67	63	59	55	52	47	43	39	36	33	31
	40	66	66	66	63	59	55	52	47	43	39	36	33	31
	50	60	60	60	60	59	55	52	47	43	39	36	33	31
	60	55	55	55	55	55	55	52	47	43	39	36	33	31
	70	51	51	51	51	51	51	51	47	43	39	36	33	31
	80	48	48	48	48	48	48	48	47	43	39	36	33	31
	90	45	45	45	45	45	45	45	45	43	39	36	33	31

Notes:

1. Tables are based on critical rail span for load combinations as specified in chapter 2 of the ASCE 7-16 and allowable design loads per the 2015 Aluminum Design Manual.
2. Panels are assumed to be in portrait orientation with a maximum length of 82"

Structural ENGINUITY INC
Ingenuity in Engineering

SUNMODO®

Max Rail Spans for SunModo SMR200 Rail System

Table 78a

Mean Roof Height: 15 < h ≤ 30 ft
Roof Angle: 7 < θ ≤ 20 degrees
Exposure Category: D
Panel Orientation: Portrait
North/South Support Y_E = 1
Roof Type : Gable

Roof Wind Zone	Ground Snow Load (psf)	Wind Speed (mph)												
		90	95	100	105	110	115	120	130	140	150	160	170	180
Zones 1 & 2e	0	111	111	111	105	99	93	86	75	67	62	57	53	50
	10	97	97	97	97	97	93	86	75	67	62	57	53	50
	20	74	74	74	74	74	74	74	74	67	62	57	53	50
	30	74	74	74	74	74	74	74	74	67	62	57	53	50
	40	66	66	66	66	66	66	66	66	66	62	57	53	50
	50	60	60	60	60	60	60	60	60	60	60	57	53	50
	60	55	55	55	55	55	55	55	55	55	55	55	53	50
	70	51	51	51	51	51	51	51	51	51	51	51	51	50
	80	48	48	48	48	48	48	48	48	48	48	48	48	48
	90	45	45	45	45	45	45	45	45	45	45	45	45	45
Zones 2n, 2r, & 3e	0	102	97	90	84	79	74	70	62	56	51	47	43	40
	10	97	97	90	84	79	74	70	62	56	51	47	43	40
	20	74	74	74	74	74	74	70	62	56	51	47	43	40
	30	74	74	74	74	74	74	70	62	56	51	47	43	40
	40	66	66	66	66	66	66	66	62	56	51	47	43	40
	50	60	60	60	60	60	60	60	60	56	51	47	43	40
	60	55	55	55	55	55	55	55	55	55	51	47	43	40
	70	51	51	51	51	51	51	51	51	51	51	47	43	40
	80	48	48	48	48	48	48	48	48	48	48	47	43	40
	90	45	45	45	45	45	45	45	45	45	45	45	43	40
Zone 3r	0	93	86	80	74	70	65	62	55	50	45	42	38	36
	10	93	86	80	74	70	65	62	55	50	45	42	38	36
	20	74	74	74	74	70	65	62	55	50	45	42	38	36
	30	74	74	74	74	70	65	62	55	50	45	42	38	36
	40	66	66	66	66	66	65	62	55	50	45	42	38	36
	50	60	60	60	60	60	60	60	55	50	45	42	38	36
	60	55	55	55	55	55	55	55	55	50	45	42	38	36
	70	51	51	51	51	51	51	51	51	50	45	42	38	36
	80	48	48	48	48	48	48	48	48	48	45	42	38	36
	90	45	45	45	45	45	45	45	45	45	45	42	38	36

Notes:

1. Tables are based on critical rail span for load combinations as specified in chapter 2 of the ASCE 7-16 and allowable design loads per the 2015 Aluminum Design Manual.
2. Panels are assumed to be in portrait orientation with a maximum length of 82"

Structural ENGINUITY INC
Ingenuity in Engineering

SUNMODO®

Max Rail Spans for SunModo SMR200 Rail System

Table 78b

Mean Roof Height: 15 < h ≤ 30 ft
Roof Angle: 7 < θ ≤ 20 degrees
Exposure Category: D
Panel Orientation: Portrait
North/South Support γ_E = 1.5
Roof Type : Gable

Roof Wind Zone	Ground Snow Load (psf)	Wind Speed (mph)												
		90	95	100	105	110	115	120	130	140	150	160	170	180
Zones 1 & 2e	0	99	91	83	76	71	67	63	58	53	49	45	42	39
	10	97	91	83	76	71	67	63	58	53	49	45	42	39
	20	74	74	74	74	71	67	63	58	53	49	45	42	39
	30	74	74	74	74	71	67	63	58	53	49	45	42	39
	40	66	66	66	66	66	66	63	58	53	49	45	42	39
	50	60	60	60	60	60	60	60	58	53	49	45	42	39
	60	55	55	55	55	55	55	55	55	53	49	45	42	39
	70	51	51	51	51	51	51	51	51	51	49	45	42	39
	80	48	48	48	48	48	48	48	48	48	48	45	42	39
	90	45	45	45	45	45	45	45	45	45	45	45	42	39
Zones 2n, 2r, & 3e	0	78	73	68	63	59	56	53	47	43	39	36	34	32
	10	78	73	68	63	59	56	53	47	43	39	36	34	32
	20	74	73	68	63	59	56	53	47	43	39	36	34	32
	30	74	73	68	63	59	56	53	47	43	39	36	34	32
	40	66	66	66	63	59	56	53	47	43	39	36	34	32
	50	60	60	60	60	59	56	53	47	43	39	36	34	32
	60	55	55	55	55	55	55	53	47	43	39	36	34	32
	70	51	51	51	51	51	51	51	47	43	39	36	34	32
	80	48	48	48	48	48	48	48	47	43	39	36	34	32
	90	45	45	45	45	45	45	45	45	43	39	36	34	32
Zone 3r	0	69	64	60	56	53	49	47	42	38	35	32	31	29
	10	69	64	60	56	53	49	47	42	38	35	32	31	29
	20	69	64	60	56	53	49	47	42	38	35	32	31	29
	30	69	64	60	56	53	49	47	42	38	35	32	31	29
	40	66	64	60	56	53	49	47	42	38	35	32	31	29
	50	60	60	60	56	53	49	47	42	38	35	32	31	29
	60	55	55	55	55	53	49	47	42	38	35	32	31	29
	70	51	51	51	51	51	49	47	42	38	35	32	31	29
	80	48	48	48	48	48	48	47	42	38	35	32	31	29
	90	45	45	45	45	45	45	45	42	38	35	32	31	29

Notes:

1. Tables are based on critical rail span for load combinations as specified in chapter 2 of the ASCE 7-16 and allowable design loads per the 2015 Aluminum Design Manual.
2. Panels are assumed to be in portrait orientation with a maximum length of 82"

Structural ENGINUITY INC
Ingenuity in Engineering

SUNMODO®

Max Rail Spans for SunModo SMR200 Rail System

Table 79a

Mean Roof Height: 15 < h ≤ 30 ft
Roof Angle: 20 < θ ≤ 27 degrees
Exposure Category: B
Panel Orientation: Portrait
North/South Support $\gamma_E = 1$
Roof Type : Gable

Roof Wind Zone	Ground Snow Load (psf)	Wind Speed (mph)												
		90	95	100	105	110	115	120	130	140	150	160	170	180
Zones 1 & 2e	0	111	111	111	111	111	111	111	111	109	102	95	87	81
	10	106	106	106	106	106	106	106	106	106	102	95	87	81
	20	88	88	88	88	88	88	88	88	88	88	87	86	81
	30	75	75	75	75	75	75	75	75	75	75	75	75	75
	40	66	66	66	66	66	66	66	66	66	66	66	66	66
	50	60	60	60	60	60	60	60	60	60	60	60	60	60
	60	55	55	55	55	55	55	55	55	55	55	55	55	55
	70	52	52	52	52	52	52	52	52	52	52	52	52	52
	80	48	48	48	48	48	48	48	48	48	48	48	48	48
	90	46	46	46	46	46	46	46	46	46	46	46	46	46
Zones 2n, 2r, & 3e	0	111	111	111	111	111	111	107	99	89	81	74	68	63
	10	106	106	106	106	106	106	106	99	89	81	74	68	63
	20	88	88	88	88	88	88	88	88	88	81	74	68	63
	30	75	75	75	75	75	75	75	75	75	75	74	68	63
	40	66	66	66	66	66	66	66	66	66	66	66	66	63
	50	60	60	60	60	60	60	60	60	60	60	60	60	60
	60	55	55	55	55	55	55	55	55	55	55	55	55	55
	70	52	52	52	52	52	52	52	52	52	52	52	52	52
	80	48	48	48	48	48	48	48	48	48	48	48	48	48
	90	46	46	46	46	46	46	46	46	46	46	46	46	46
Zone 3r	0	111	111	111	111	111	106	102	92	82	74	68	62	57
	10	106	106	106	106	106	106	102	92	82	74	68	62	57
	20	88	88	88	88	88	88	88	88	82	74	68	62	57
	30	75	75	75	75	75	75	75	75	75	74	68	62	57
	40	66	66	66	66	66	66	66	66	66	66	66	62	57
	50	60	60	60	60	60	60	60	60	60	60	60	60	57
	60	55	55	55	55	55	55	55	55	55	55	55	55	55
	70	52	52	52	52	52	52	52	52	52	52	52	52	52
	80	48	48	48	48	48	48	48	48	48	48	48	48	48
	90	46	46	46	46	46	46	46	46	46	46	46	46	46

Notes:

1. Tables are based on critical rail span for load combinations as specified in chapter 2 of the ASCE 7-16 and allowable design loads per the 2015 Aluminum Design Manual.
2. Panels are assumed to be in portrait orientation with a maximum length of 82"

Structural ENGINUITY INC
Ingenuity in Engineering

SUNMODO®

Max Rail Spans for SunModo SMR200 Rail System

Table 79b

Mean Roof Height: 15 < h ≤ 30 ft
Roof Angle: 20 < θ ≤ 27 degrees
Exposure Category: B
Panel Orientation: Portrait
North/South Support γ_E = 1.5
Roof Type : Gable

Roof Wind Zone	Ground Snow Load (psf)	Wind Speed (mph)												
		90	95	100	105	110	115	120	130	140	150	160	170	180
Zones 1 & 2e	0	111	111	111	111	111	108	104	95	86	78	72	67	62
	10	106	106	106	106	106	106	104	95	86	78	72	67	62
	20	88	88	88	88	88	88	88	88	86	78	72	67	62
	30	75	75	75	75	75	75	75	75	75	75	72	67	62
	40	66	66	66	66	66	66	66	66	66	66	66	66	62
	50	60	60	60	60	60	60	60	60	60	60	60	60	60
	60	55	55	55	55	55	55	55	55	55	55	55	55	55
	70	52	52	52	52	52	52	52	52	52	52	52	52	52
	80	48	48	48	48	48	48	48	48	48	48	48	48	48
	90	46	46	46	46	46	46	46	46	46	46	46	46	46
Zones 2n, 2r, & 3e	0	111	110	105	100	94	88	83	74	67	61	56	52	48
	10	106	106	105	100	94	88	83	74	67	61	56	52	48
	20	88	88	88	88	88	88	83	74	67	61	56	52	48
	30	75	75	75	75	75	75	75	74	67	61	56	52	48
	40	66	66	66	66	66	66	66	66	66	61	56	52	48
	50	60	60	60	60	60	60	60	60	60	60	56	52	48
	60	55	55	55	55	55	55	55	55	55	55	55	52	48
	70	52	52	52	52	52	52	52	52	52	52	52	52	48
	80	48	48	48	48	48	48	48	48	48	48	48	48	48
	90	46	46	46	46	46	46	46	46	46	46	46	46	46
Zone 3r	0	111	105	100	93	87	82	77	68	62	56	51	47	44
	10	106	105	100	93	87	82	77	68	62	56	51	47	44
	20	88	88	88	88	87	82	77	68	62	56	51	47	44
	30	75	75	75	75	75	75	75	68	62	56	51	47	44
	40	66	66	66	66	66	66	66	66	62	56	51	47	44
	50	60	60	60	60	60	60	60	60	60	56	51	47	44
	60	55	55	55	55	55	55	55	55	55	55	51	47	44
	70	52	52	52	52	52	52	52	52	52	52	51	47	44
	80	48	48	48	48	48	48	48	48	48	48	48	47	44
	90	46	46	46	46	46	46	46	46	46	46	46	46	44

Notes:

1. Tables are based on critical rail span for load combinations as specified in chapter 2 of the ASCE 7-16 and allowable design loads per the 2015 Aluminum Design Manual.
2. Panels are assumed to be in portrait orientation with a maximum length of 82"

Structural ENGINUITY INC
Ingenuity in Engineering

SUNMODO®

Max Rail Spans for SunModo SMR200 Rail System

Table 80a

Mean Roof Height: 15 < h ≤ 30 ft
Roof Angle: 20 < θ ≤ 27 degrees
Exposure Category: C
Panel Orientation: Portrait
North/South Support $\gamma_E = 1$
Roof Type : Gable

Roof Wind Zone	Ground Snow Load (psf)	Wind Speed (mph)												
		90	95	100	105	110	115	120	130	140	150	160	170	180
Zones 1 & 2e	0	111	111	111	111	111	111	107	99	90	82	75	70	65
	10	106	106	106	106	106	106	106	99	90	82	75	70	65
	20	88	88	88	88	88	88	88	87	86	82	75	70	65
	30	75	75	75	75	75	75	75	75	75	75	74	70	65
	40	66	66	66	66	66	66	66	66	66	66	66	66	65
	50	60	60	60	60	60	60	60	60	60	60	60	60	60
	60	55	55	55	55	55	55	55	55	55	55	55	55	55
	70	52	52	52	52	52	52	52	52	52	52	52	52	52
	80	48	48	48	48	48	48	48	48	48	48	48	48	48
	90	46	46	46	46	46	46	46	46	46	46	46	46	46
Zones 2n, 2r, & 3e	0	111	111	108	103	99	93	87	78	70	64	59	54	50
	10	106	106	106	103	99	93	87	78	70	64	59	54	50
	20	88	88	88	88	88	88	87	78	70	64	59	54	50
	30	75	75	75	75	75	75	75	75	70	64	59	54	50
	40	66	66	66	66	66	66	66	66	66	64	59	54	50
	50	60	60	60	60	60	60	60	60	60	60	59	54	50
	60	55	55	55	55	55	55	55	55	55	55	55	54	50
	70	52	52	52	52	52	52	52	52	52	52	52	52	50
	80	48	48	48	48	48	48	48	48	48	48	48	48	48
	90	46	46	46	46	46	46	46	46	46	46	46	46	46
Zone 3r	0	111	109	103	98	92	86	81	72	65	59	54	49	46
	10	106	106	103	98	92	86	81	72	65	59	54	49	46
	20	88	88	88	88	88	86	81	72	65	59	54	49	46
	30	75	75	75	75	75	75	75	72	65	59	54	49	46
	40	66	66	66	66	66	66	66	66	65	59	54	49	46
	50	60	60	60	60	60	60	60	60	60	59	54	49	46
	60	55	55	55	55	55	55	55	55	55	55	54	49	46
	70	52	52	52	52	52	52	52	52	52	52	52	49	46
	80	48	48	48	48	48	48	48	48	48	48	48	48	46
	90	46	46	46	46	46	46	46	46	46	46	46	46	46

Notes:

1. Tables are based on critical rail span for load combinations as specified in chapter 2 of the ASCE 7-16 and allowable design loads per the 2015 Aluminum Design Manual.
2. Panels are assumed to be in portrait orientation with a maximum length of 82"

Structural ENGINUITY INC
Ingenuity in Engineering

SUNMODO®

Max Rail Spans for SunModo SMR200 Rail System

Table 80b

Mean Roof Height: 15 < h ≤ 30 ft
Roof Angle: 20 < θ ≤ 27 degrees
Exposure Category: C
Panel Orientation: Portrait
North/South Support γ_E = 1.5
Roof Type : Gable

Roof Wind Zone	Ground Snow Load (psf)	Wind Speed (mph)												
		90	95	100	105	110	115	120	130	140	150	160	170	180
Zones 1 & 2e	0	111	110	105	100	95	89	84	76	69	63	59	55	51
	10	106	106	105	100	95	89	84	76	69	63	59	55	51
	20	88	88	88	88	88	88	84	76	69	63	59	55	51
	30	75	75	75	75	75	75	75	75	69	63	59	55	51
	40	66	66	66	66	66	66	66	66	66	63	59	55	51
	50	60	60	60	60	60	60	60	60	60	60	59	55	51
	60	55	55	55	55	55	55	55	55	55	55	55	55	51
	70	52	52	52	52	52	52	52	52	52	52	52	52	51
	80	48	48	48	48	48	48	48	48	48	48	48	48	48
	90	46	46	46	46	46	46	46	46	46	46	46	46	46
Zones 2n, 2r, & 3e	0	99	91	85	79	74	70	66	59	54	49	45	42	39
	10	99	91	85	79	74	70	66	59	54	49	45	42	39
	20	88	88	85	79	74	70	66	59	54	49	45	42	39
	30	75	75	75	75	74	70	66	59	54	49	45	42	39
	40	66	66	66	66	66	66	66	59	54	49	45	42	39
	50	60	60	60	60	60	60	60	59	54	49	45	42	39
	60	55	55	55	55	55	55	55	55	54	49	45	42	39
	70	52	52	52	52	52	52	52	52	52	49	45	42	39
	80	48	48	48	48	48	48	48	48	48	48	45	42	39
	90	46	46	46	46	46	46	46	46	46	46	45	42	39
Zone 3r	0	91	84	78	73	68	64	60	54	49	44	41	38	35
	10	91	84	78	73	68	64	60	54	49	44	41	38	35
	20	88	84	78	73	68	64	60	54	49	44	41	38	35
	30	75	75	75	73	68	64	60	54	49	44	41	38	35
	40	66	66	66	66	66	64	60	54	49	44	41	38	35
	50	60	60	60	60	60	60	60	54	49	44	41	38	35
	60	55	55	55	55	55	55	55	54	49	44	41	38	35
	70	52	52	52	52	52	52	52	52	49	44	41	38	35
	80	48	48	48	48	48	48	48	48	48	44	41	38	35
	90	46	46	46	46	46	46	46	46	46	44	41	38	35

Notes:

1. Tables are based on critical rail span for load combinations as specified in chapter 2 of the ASCE 7-16 and allowable design loads per the 2015 Aluminum Design Manual.
2. Panels are assumed to be in portrait orientation with a maximum length of 82"

Structural ENGINUITY INC
Ingenuity in Engineering

SUNMODO®

Max Rail Spans for SunModo SMR200 Rail System

Table 81a

Mean Roof Height: 15 < h ≤ 30 ft
Roof Angle: 20 < θ ≤ 27 degrees
Exposure Category: D
Panel Orientation: Portrait
North/South Support Y_E = 1
Roof Type : Gable

Roof Wind Zone	Ground Snow Load (psf)	Wind Speed (mph)												
		90	95	100	105	110	115	120	130	140	150	160	170	180
Zones 1 & 2e	0	111	111	111	111	107	103	99	89	80	73	68	63	59
	10	106	106	106	106	106	103	99	89	80	73	68	63	59
	20	88	88	88	88	88	88	87	86	80	73	68	63	59
	30	75	75	75	75	75	75	75	75	75	73	68	63	59
	40	66	66	66	66	66	66	66	66	66	66	66	63	59
	50	60	60	60	60	60	60	60	60	60	60	60	60	59
	60	55	55	55	55	55	55	55	55	55	55	55	55	55
	70	52	52	52	52	52	52	52	52	52	52	52	52	52
	80	48	48	48	48	48	48	48	48	48	48	48	48	48
	90	46	46	46	46	46	46	46	46	46	46	46	46	46
Zones 2n, 2r, & 3e	0	110	105	100	94	88	82	78	70	63	57	53	49	45
	10	106	105	100	94	88	82	78	70	63	57	53	49	45
	20	88	88	88	88	88	82	78	70	63	57	53	49	45
	30	75	75	75	75	75	75	75	70	63	57	53	49	45
	40	66	66	66	66	66	66	66	66	63	57	53	49	45
	50	60	60	60	60	60	60	60	60	60	57	53	49	45
	60	55	55	55	55	55	55	55	55	55	55	53	49	45
	70	52	52	52	52	52	52	52	52	52	52	52	49	45
	80	48	48	48	48	48	48	48	48	48	48	48	48	45
	90	46	46	46	46	46	46	46	46	46	46	46	46	45
Zone 3r	0	106	100	93	87	81	76	71	64	57	52	48	44	41
	10	106	100	93	87	81	76	71	64	57	52	48	44	41
	20	88	88	88	87	81	76	71	64	57	52	48	44	41
	30	75	75	75	75	75	75	71	64	57	52	48	44	41
	40	66	66	66	66	66	66	66	64	57	52	48	44	41
	50	60	60	60	60	60	60	60	60	57	52	48	44	41
	60	55	55	55	55	55	55	55	55	55	52	48	44	41
	70	52	52	52	52	52	52	52	52	52	52	48	44	41
	80	48	48	48	48	48	48	48	48	48	48	48	44	41
	90	46	46	46	46	46	46	46	46	46	46	46	44	41

Notes:

1. Tables are based on critical rail span for load combinations as specified in chapter 2 of the ASCE 7-16 and allowable design loads per the 2015 Aluminum Design Manual.
2. Panels are assumed to be in portrait orientation with a maximum length of 82"

Structural ENGINUITY INC
Ingenuity in Engineering

SUNMODO®

Max Rail Spans for SunModo SMR200 Rail System

Table 81b

Mean Roof Height: 15 < h ≤ 30 ft
Roof Angle: 20 < θ ≤ 27 degrees
Exposure Category: D
Panel Orientation: Portrait
North/South Support γ_E = 1.5
Roof Type : Gable

Roof Wind Zone	Ground Snow Load (psf)	Wind Speed (mph)												
		90	95	100	105	110	115	120	130	140	150	160	170	180
Zones 1 & 2e	0	107	102	97	90	85	80	75	68	62	57	53	50	47
	10	106	102	97	90	85	80	75	68	62	57	53	50	47
	20	88	88	88	88	85	80	75	68	62	57	53	50	47
	30	75	75	75	75	75	75	75	68	62	57	53	50	47
	40	66	66	66	66	66	66	66	66	62	57	53	50	47
	50	60	60	60	60	60	60	60	60	60	57	53	50	47
	60	55	55	55	55	55	55	55	55	55	55	53	50	47
	70	52	52	52	52	52	52	52	52	52	52	52	50	47
	80	48	48	48	48	48	48	48	48	48	48	48	48	47
	90	46	46	46	46	46	46	46	46	46	46	46	46	46
Zones 2n, 2r, & 3e	0	87	81	75	71	66	62	59	53	48	44	40	37	35
	10	87	81	75	71	66	62	59	53	48	44	40	37	35
	20	87	81	75	71	66	62	59	53	48	44	40	37	35
	30	75	75	75	71	66	62	59	53	48	44	40	37	35
	40	66	66	66	66	66	62	59	53	48	44	40	37	35
	50	60	60	60	60	60	60	59	53	48	44	40	37	35
	60	55	55	55	55	55	55	55	53	48	44	40	37	35
	70	52	52	52	52	52	52	52	52	48	44	40	37	35
	80	48	48	48	48	48	48	48	48	48	44	40	37	35
	90	46	46	46	46	46	46	46	46	46	44	40	37	35
Zone 3r	0	81	75	69	65	61	57	54	48	43	40	36	34	32
	10	81	75	69	65	61	57	54	48	43	40	36	34	32
	20	81	75	69	65	61	57	54	48	43	40	36	34	32
	30	75	75	69	65	61	57	54	48	43	40	36	34	32
	40	66	66	66	65	61	57	54	48	43	40	36	34	32
	50	60	60	60	60	60	57	54	48	43	40	36	34	32
	60	55	55	55	55	55	55	54	48	43	40	36	34	32
	70	52	52	52	52	52	52	52	48	43	40	36	34	32
	80	48	48	48	48	48	48	48	48	43	40	36	34	32
	90	46	46	46	46	46	46	46	46	43	40	36	34	32

Notes:

1. Tables are based on critical rail span for load combinations as specified in chapter 2 of the ASCE 7-16 and allowable design loads per the 2015 Aluminum Design Manual.
2. Panels are assumed to be in portrait orientation with a maximum length of 82"

Structural ENGINUITY INC
Ingenuity in Engineering

SUNMODO®

Max Rail Spans for SunModo SMR200 Rail System

Table 82a

Mean Roof Height: 15 < h ≤ 30 ft
Roof Angle: 27 < θ ≤ 45 degrees
Exposure Category: B
Panel Orientation: Portrait
North/South Support $Y_E = 1$
Roof Type : Gable

Roof Wind Zone	Ground Snow Load (psf)	Wind Speed (mph)												
		90	95	100	105	110	115	120	130	140	150	160	170	180
Zones 1, 2e, & 2r	0	111	111	111	111	111	111	111	111	110	102	93	86	79
	10	107	107	107	107	107	107	105	103	100	98	93	86	79
	20	92	92	92	92	91	91	90	88	86	85	83	81	79
	30	79	79	79	79	79	79	79	78	77	76	74	73	72
	40	70	70	70	70	70	70	70	70	70	69	68	67	66
	50	64	64	64	64	64	64	64	64	64	64	63	62	61
	60	59	59	59	59	59	59	59	59	59	59	59	59	58
	70	55	55	55	55	55	55	55	55	55	55	55	55	55
	80	52	52	52	52	52	52	52	52	52	52	52	52	52
	90	49	49	49	49	49	49	49	49	49	49	49	49	49
Zones 2n & 3r	0	111	111	111	111	111	111	111	107	98	89	82	76	71
	10	107	107	107	107	107	107	105	103	98	89	82	76	71
	20	92	92	92	92	91	91	90	88	86	85	82	76	71
	30	79	79	79	79	79	79	79	78	77	76	74	73	71
	40	70	70	70	70	70	70	70	70	70	69	68	67	66
	50	64	64	64	64	64	64	64	64	64	64	63	62	61
	60	59	59	59	59	59	59	59	59	59	59	59	59	58
	70	55	55	55	55	55	55	55	55	55	55	55	55	55
	80	52	52	52	52	52	52	52	52	52	52	52	52	52
	90	49	49	49	49	49	49	49	49	49	49	49	49	49
Zone 3e	0	111	111	111	111	111	109	104	94	85	78	72	66	62
	10	107	107	107	107	107	107	104	94	85	78	72	66	62
	20	92	92	92	92	91	91	90	88	85	78	72	66	62
	30	79	79	79	79	79	79	79	78	77	76	72	66	62
	40	70	70	70	70	70	70	70	70	70	69	68	66	62
	50	64	64	64	64	64	64	64	64	64	64	63	62	61
	60	59	59	59	59	59	59	59	59	59	59	59	59	58
	70	55	55	55	55	55	55	55	55	55	55	55	55	55
	80	52	52	52	52	52	52	52	52	52	52	52	52	52
	90	49	49	49	49	49	49	49	49	49	49	49	49	49

Notes:

1. Tables are based on critical rail span for load combinations as specified in chapter 2 of the ASCE 7-16 and allowable design loads per the 2015 Aluminum Design Manual.
2. Panels are assumed to be in portrait orientation with a maximum length of 82"

Structural ENGINUITY INC
Ingenuity in Engineering

SUNMODO®

Max Rail Spans for SunModo SMR200 Rail System

Table 82b

Mean Roof Height: 15 < h ≤ 30 ft
Roof Angle: 27 < θ ≤ 45 degrees
Exposure Category: B
Panel Orientation: Portrait
North/South Support γ_E = 1.5
Roof Type : Gable

Roof Wind Zone	Ground Snow Load (psf)	Wind Speed (mph)												
		90	95	100	105	110	115	120	130	140	150	160	170	180
Zones 1, 2e, & 2r	0	111	111	111	111	111	109	105	94	85	77	71	65	60
	10	107	107	107	107	107	107	105	94	85	77	71	65	60
	20	92	92	92	92	91	91	90	88	85	77	71	65	60
	30	79	79	79	79	79	79	79	78	77	76	71	65	60
	40	70	70	70	70	70	70	70	70	70	69	68	65	60
	50	64	64	64	64	64	64	64	64	64	64	63	62	60
	60	59	59	59	59	59	59	59	59	59	59	59	59	58
	70	55	55	55	55	55	55	55	55	55	55	55	55	55
	80	52	52	52	52	52	52	52	52	52	52	52	52	52
	90	49	49	49	49	49	49	49	49	49	49	49	49	49
Zones 2n & 3r	0	111	111	111	108	103	97	92	83	75	69	63	59	55
	10	107	107	107	107	103	97	92	83	75	69	63	59	55
	20	92	92	92	92	91	91	90	83	75	69	63	59	55
	30	79	79	79	79	79	79	79	78	75	69	63	59	55
	40	70	70	70	70	70	70	70	70	70	69	63	59	55
	50	64	64	64	64	64	64	64	64	64	64	63	59	55
	60	59	59	59	59	59	59	59	59	59	59	59	59	55
	70	55	55	55	55	55	55	55	55	55	55	55	55	55
	80	52	52	52	52	52	52	52	52	52	52	52	52	52
	90	49	49	49	49	49	49	49	49	49	49	49	49	49
Zone 3e	0	111	107	102	95	90	85	80	72	66	60	55	51	48
	10	107	107	102	95	90	85	80	72	66	60	55	51	48
	20	92	92	92	92	90	85	80	72	66	60	55	51	48
	30	79	79	79	79	79	79	79	72	66	60	55	51	48
	40	70	70	70	70	70	70	70	70	66	60	55	51	48
	50	64	64	64	64	64	64	64	64	64	60	55	51	48
	60	59	59	59	59	59	59	59	59	59	59	55	51	48
	70	55	55	55	55	55	55	55	55	55	55	55	51	48
	80	52	52	52	52	52	52	52	52	52	52	52	51	48
	90	49	49	49	49	49	49	49	49	49	49	49	49	48

Notes:

1. Tables are based on critical rail span for load combinations as specified in chapter 2 of the ASCE 7-16 and allowable design loads per the 2015 Aluminum Design Manual.
2. Panels are assumed to be in portrait orientation with a maximum length of 82"

Structural ENGINUITY INC
Ingenuity in Engineering

SUNMODO®

Max Rail Spans for SunModo SMR200 Rail System

Table 83a

Mean Roof Height: 15 < h ≤ 30 ft
Roof Angle: 27 < θ ≤ 45 degrees
Exposure Category: C
Panel Orientation: Portrait
North/South Support Y_E = 1
Roof Type : Gable

Roof Wind Zone	Ground Snow Load (psf)	Wind Speed (mph)												
		90	95	100	105	110	115	120	130	140	150	160	170	180
Zones 1, 2e, & 2r	0	111	111	111	111	111	111	109	99	89	81	74	68	63
	10	107	107	106	104	103	101	100	97	89	81	74	68	63
	20	92	91	90	89	88	87	86	84	82	79	74	68	63
	30	79	79	79	79	78	78	77	75	74	72	70	68	63
	40	70	70	70	70	70	70	70	69	68	66	65	63	62
	50	64	64	64	64	64	64	64	64	63	62	61	59	58
	60	59	59	59	59	59	59	59	59	59	58	57	56	55
	70	55	55	55	55	55	55	55	55	55	55	54	53	52
	80	52	52	52	52	52	52	52	52	52	52	52	51	50
	90	49	49	49	49	49	49	49	49	49	49	49	49	48
Zones 2n & 3r	0	111	111	111	111	107	101	96	87	79	72	66	61	57
	10	107	107	106	104	103	101	96	87	79	72	66	61	57
	20	92	91	90	89	88	87	86	84	79	72	66	61	57
	30	79	79	79	79	78	78	77	75	74	72	66	61	57
	40	70	70	70	70	70	70	70	69	68	66	65	61	57
	50	64	64	64	64	64	64	64	64	63	62	61	59	57
	60	59	59	59	59	59	59	59	59	59	58	57	56	55
	70	55	55	55	55	55	55	55	55	55	55	54	53	52
	80	52	52	52	52	52	52	52	52	52	52	52	51	50
	90	49	49	49	49	49	49	49	49	49	49	49	49	48
Zone 3e	0	111	111	106	100	94	88	84	75	69	63	58	53	50
	10	107	107	106	100	94	88	84	75	69	63	58	53	50
	20	92	91	90	89	88	87	84	75	69	63	58	53	50
	30	79	79	79	79	78	78	77	75	69	63	58	53	50
	40	70	70	70	70	70	70	70	69	68	63	58	53	50
	50	64	64	64	64	64	64	64	64	63	62	58	53	50
	60	59	59	59	59	59	59	59	59	59	58	57	53	50
	70	55	55	55	55	55	55	55	55	55	55	54	53	50
	80	52	52	52	52	52	52	52	52	52	52	52	51	50
	90	49	49	49	49	49	49	49	49	49	49	49	49	48

Notes:

1. Tables are based on critical rail span for load combinations as specified in chapter 2 of the ASCE 7-16 and allowable design loads per the 2015 Aluminum Design Manual.
2. Panels are assumed to be in portrait orientation with a maximum length of 82"

Structural ENGINUITY INC
Ingenuity in Engineering

SUNMODO®

Max Rail Spans for SunModo SMR200 Rail System

Table 83b

Mean Roof Height: 15 < h ≤ 30 ft
Roof Angle: 27 < θ ≤ 45 degrees
Exposure Category: C
Panel Orientation: Portrait
North/South Support γ_E = 1.5
Roof Type : Gable

Roof Wind Zone	Ground Snow Load (psf)	Wind Speed (mph)												
		90	95	100	105	110	115	120	130	140	150	160	170	180
Zones 1, 2e, & 2r	0	111	111	106	100	94	88	83	74	67	61	56	52	48
	10	107	107	106	100	94	88	83	74	67	61	56	52	48
	20	92	91	90	89	88	87	83	74	67	61	56	52	48
	30	79	79	79	79	78	78	77	74	67	61	56	52	48
	40	70	70	70	70	70	70	70	69	67	61	56	52	48
	50	64	64	64	64	64	64	64	64	63	61	56	52	48
	60	59	59	59	59	59	59	59	59	59	58	56	52	48
	70	55	55	55	55	55	55	55	55	55	55	54	52	48
	80	52	52	52	52	52	52	52	52	52	52	52	51	48
	90	49	49	49	49	49	49	49	49	49	49	49	49	48
Zones 2n & 3r	0	106	100	93	88	83	78	74	67	61	56	51	47	44
	10	106	100	93	88	83	78	74	67	61	56	51	47	44
	20	92	91	90	88	83	78	74	67	61	56	51	47	44
	30	79	79	79	79	78	78	74	67	61	56	51	47	44
	40	70	70	70	70	70	70	70	67	61	56	51	47	44
	50	64	64	64	64	64	64	64	64	61	56	51	47	44
	60	59	59	59	59	59	59	59	59	59	56	51	47	44
	70	55	55	55	55	55	55	55	55	55	55	51	47	44
	80	52	52	52	52	52	52	52	52	52	52	51	47	44
	90	49	49	49	49	49	49	49	49	49	49	49	47	44
Zone 3e	0	94	87	82	77	72	68	64	58	53	48	45	41	38
	10	94	87	82	77	72	68	64	58	53	48	45	41	38
	20	92	87	82	77	72	68	64	58	53	48	45	41	38
	30	79	79	79	77	72	68	64	58	53	48	45	41	38
	40	70	70	70	70	70	68	64	58	53	48	45	41	38
	50	64	64	64	64	64	64	64	58	53	48	45	41	38
	60	59	59	59	59	59	59	59	58	53	48	45	41	38
	70	55	55	55	55	55	55	55	55	53	48	45	41	38
	80	52	52	52	52	52	52	52	52	52	48	45	41	38
	90	49	49	49	49	49	49	49	49	49	48	45	41	38

Notes:

1. Tables are based on critical rail span for load combinations as specified in chapter 2 of the ASCE 7-16 and allowable design loads per the 2015 Aluminum Design Manual.
2. Panels are assumed to be in portrait orientation with a maximum length of 82"

Structural ENGINUITY INC
Ingenuity in Engineering

SUNMODO®

Max Rail Spans for SunModo SMR200 Rail System

Table 84a

Mean Roof Height: 15 < h ≤ 30 ft
Roof Angle: 27 < θ ≤ 45 degrees
Exposure Category: D
Panel Orientation: Portrait
North/South Support Y_E = 1
Roof Type : Gable

Roof Wind Zone	Ground Snow Load (psf)	Wind Speed (mph)												
		90	95	100	105	110	115	120	130	140	150	160	170	180
Zones 1, 2e, & 2r	0	111	111	111	111	109	104	98	88	79	72	66	61	56
	10	106	105	103	102	100	98	96	88	79	72	66	61	56
	20	91	89	88	87	86	85	84	81	79	72	66	61	56
	30	79	79	79	78	77	76	75	73	72	70	66	61	56
	40	70	70	70	70	70	70	69	67	66	64	63	61	56
	50	64	64	64	64	64	64	64	63	61	60	59	58	56
	60	59	59	59	59	59	59	59	59	58	57	56	55	53
	70	55	55	55	55	55	55	55	55	55	54	53	52	51
	80	52	52	52	52	52	52	52	52	52	51	51	50	49
	90	49	49	49	49	49	49	49	49	49	49	48	48	47
Zones 2n & 3r	0	111	111	108	102	96	91	86	78	71	65	60	55	51
	10	106	105	103	102	96	91	86	78	71	65	60	55	51
	20	91	89	88	87	86	85	84	78	71	65	60	55	51
	30	79	79	79	78	77	76	75	73	71	65	60	55	51
	40	70	70	70	70	70	70	69	67	66	64	60	55	51
	50	64	64	64	64	64	64	64	63	61	60	59	55	51
	60	59	59	59	59	59	59	59	59	58	57	56	55	51
	70	55	55	55	55	55	55	55	55	55	54	53	52	51
	80	52	52	52	52	52	52	52	52	52	51	51	50	49
	90	49	49	49	49	49	49	49	49	49	49	48	48	47
Zone 3e	0	108	102	95	89	84	79	75	68	62	56	52	48	45
	10	106	102	95	89	84	79	75	68	62	56	52	48	45
	20	91	89	88	87	84	79	75	68	62	56	52	48	45
	30	79	79	79	78	77	76	75	68	62	56	52	48	45
	40	70	70	70	70	70	70	69	67	62	56	52	48	45
	50	64	64	64	64	64	64	64	63	61	56	52	48	45
	60	59	59	59	59	59	59	59	59	58	56	52	48	45
	70	55	55	55	55	55	55	55	55	55	54	52	48	45
	80	52	52	52	52	52	52	52	52	52	51	51	48	45
	90	49	49	49	49	49	49	49	49	49	49	48	48	45

Notes:

1. Tables are based on critical rail span for load combinations as specified in chapter 2 of the ASCE 7-16 and allowable design loads per the 2015 Aluminum Design Manual.
2. Panels are assumed to be in portrait orientation with a maximum length of 82"

Structural ENGINUITY INC
Ingenuity in Engineering

SUNMODO®

Max Rail Spans for SunModo SMR200 Rail System

Table 84b

Mean Roof Height: 15 < h ≤ 30 ft
Roof Angle: 27 < θ ≤ 45 degrees
Exposure Category: D
Panel Orientation: Portrait
North/South Support γ_E = 1.5
Roof Type : Gable

Roof Wind Zone	Ground Snow Load (psf)	Wind Speed (mph)												
		90	95	100	105	110	115	120	130	140	150	160	170	180
Zones 1, 2e, & 2r	0	109	102	95	89	83	78	74	66	60	55	50	46	43
	10	106	102	95	89	83	78	74	66	60	55	50	46	43
	20	91	89	88	87	83	78	74	66	60	55	50	46	43
	30	79	79	79	78	77	76	74	66	60	55	50	46	43
	40	70	70	70	70	70	70	69	66	60	55	50	46	43
	50	64	64	64	64	64	64	64	63	60	55	50	46	43
	60	59	59	59	59	59	59	59	59	58	55	50	46	43
	70	55	55	55	55	55	55	55	55	55	54	50	46	43
	80	52	52	52	52	52	52	52	52	52	51	50	46	43
	90	49	49	49	49	49	49	49	49	49	49	48	46	43
Zones 2n & 3r	0	96	90	84	79	74	70	66	60	54	50	46	43	40
	10	96	90	84	79	74	70	66	60	54	50	46	43	40
	20	91	89	84	79	74	70	66	60	54	50	46	43	40
	30	79	79	79	78	74	70	66	60	54	50	46	43	40
	40	70	70	70	70	70	70	66	60	54	50	46	43	40
	50	64	64	64	64	64	64	64	60	54	50	46	43	40
	60	59	59	59	59	59	59	59	59	54	50	46	43	40
	70	55	55	55	55	55	55	55	55	54	50	46	43	40
	80	52	52	52	52	52	52	52	52	52	50	46	43	40
	90	49	49	49	49	49	49	49	49	49	49	46	43	40
Zone 3e	0	84	78	73	69	65	61	58	52	47	44	40	37	35
	10	84	78	73	69	65	61	58	52	47	44	40	37	35
	20	84	78	73	69	65	61	58	52	47	44	40	37	35
	30	79	78	73	69	65	61	58	52	47	44	40	37	35
	40	70	70	70	69	65	61	58	52	47	44	40	37	35
	50	64	64	64	64	64	61	58	52	47	44	40	37	35
	60	59	59	59	59	59	59	58	52	47	44	40	37	35
	70	55	55	55	55	55	55	55	52	47	44	40	37	35
	80	52	52	52	52	52	52	52	52	47	44	40	37	35
	90	49	49	49	49	49	49	49	49	47	44	40	37	35

Notes:

1. Tables are based on critical rail span for load combinations as specified in chapter 2 of the ASCE 7-16 and allowable design loads per the 2015 Aluminum Design Manual.
2. Panels are assumed to be in portrait orientation with a maximum length of 82"

Structural ENGINUITY INC
Ingenuity in Engineering

SUNMODO®

Max Rail Spans for SunModo SMR200 Rail System

Table 85a

Mean Roof Height: 15 < h ≤ 30 ft
Roof Angle: 7 < θ ≤ 20 degrees
Exposure Category: B
Panel Orientation: Portrait
North/South Support Y_E = 1
Roof Type : Hip h/B = ≥ 0.8

Roof Wind Zone	Ground Snow Load (psf)	Wind Speed (mph)												
		90	95	100	105	110	115	120	130	140	150	160	170	180
Zone 1	0	111	111	111	111	111	111	111	110	102	95	86	78	72
	10	97	97	97	97	97	97	97	96	95	93	86	78	72
	20	74	74	74	74	74	74	74	74	74	74	74	73	72
	30	74	74	74	74	74	74	74	74	74	74	74	73	72
	40	66	66	66	66	66	66	66	66	66	66	66	66	66
	50	60	60	60	60	60	60	60	60	60	60	60	60	60
	60	55	55	55	55	55	55	55	55	55	55	55	55	55
	70	51	51	51	51	51	51	51	51	51	51	51	51	51
	80	48	48	48	48	48	48	48	48	48	48	48	48	48
	90	45	45	45	45	45	45	45	45	45	45	45	45	45
Zone 2r	0	111	111	111	111	111	111	106	99	90	82	75	69	64
	10	97	97	97	97	97	97	97	96	90	82	75	69	64
	20	74	74	74	74	74	74	74	74	74	74	74	69	64
	30	74	74	74	74	74	74	74	74	74	74	74	69	64
	40	66	66	66	66	66	66	66	66	66	66	66	66	64
	50	60	60	60	60	60	60	60	60	60	60	60	60	60
	60	55	55	55	55	55	55	55	55	55	55	55	55	55
	70	51	51	51	51	51	51	51	51	51	51	51	51	51
	80	48	48	48	48	48	48	48	48	48	48	48	48	48
	90	45	45	45	45	45	45	45	45	45	45	45	45	45
Zones 2e & 3	0	111	111	111	111	111	107	103	95	85	78	71	66	61
	10	97	97	97	97	97	97	97	95	85	78	71	66	61
	20	74	74	74	74	74	74	74	74	74	74	71	66	61
	30	74	74	74	74	74	74	74	74	74	74	71	66	61
	40	66	66	66	66	66	66	66	66	66	66	66	66	61
	50	60	60	60	60	60	60	60	60	60	60	60	60	60
	60	55	55	55	55	55	55	55	55	55	55	55	55	55
	70	51	51	51	51	51	51	51	51	51	51	51	51	51
	80	48	48	48	48	48	48	48	48	48	48	48	48	48
	90	45	45	45	45	45	45	45	45	45	45	45	45	45

Notes:

1. Tables are based on critical rail span for load combinations as specified in chapter 2 of the ASCE 7-16 and allowable design loads per the 2015 Aluminum Design Manual.
2. Panels are assumed to be in portrait orientation with a maximum length of 82"

Structural ENGINUITY INC
Ingenuity in Engineering

SUNMODO®

Max Rail Spans for SunModo SMR200 Rail System

Table 85b

Mean Roof Height: 15 < h ≤ 30 ft
Roof Angle: 7 < θ ≤ 20 degrees
Exposure Category: B

Panel Orientation: Portrait
North/South Support γ_E = 1.5
Roof Type : Hip h/B = ≥ 0.8

Roof Wind Zone	Ground Snow Load (psf)	Wind Speed (mph)												
		90	95	100	105	110	115	120	130	140	150	160	170	180
Zone 1	0	111	111	111	111	106	101	97	86	77	70	65	60	56
	10	97	97	97	97	97	97	97	86	77	70	65	60	56
	20	74	74	74	74	74	74	74	74	74	70	65	60	56
	30	74	74	74	74	74	74	74	74	74	70	65	60	56
	40	66	66	66	66	66	66	66	66	66	66	65	60	56
	50	60	60	60	60	60	60	60	60	60	60	60	60	56
	60	55	55	55	55	55	55	55	55	55	55	55	55	55
	70	51	51	51	51	51	51	51	51	51	51	51	51	51
	80	48	48	48	48	48	48	48	48	48	48	48	48	48
	90	45	45	45	45	45	45	45	45	45	45	45	45	45
Zone 2r	0	111	110	104	100	95	89	84	75	68	62	57	53	49
	10	97	97	97	97	95	89	84	75	68	62	57	53	49
	20	74	74	74	74	74	74	74	74	68	62	57	53	49
	30	74	74	74	74	74	74	74	74	68	62	57	53	49
	40	66	66	66	66	66	66	66	66	66	62	57	53	49
	50	60	60	60	60	60	60	60	60	60	60	57	53	49
	60	55	55	55	55	55	55	55	55	55	55	55	53	49
	70	51	51	51	51	51	51	51	51	51	51	51	51	49
	80	48	48	48	48	48	48	48	48	48	48	48	48	48
	90	45	45	45	45	45	45	45	45	45	45	45	45	45
Zones 2e & 3	0	111	106	101	96	90	84	80	71	65	59	54	50	47
	10	97	97	97	96	90	84	80	71	65	59	54	50	47
	20	74	74	74	74	74	74	74	71	65	59	54	50	47
	30	74	74	74	74	74	74	74	71	65	59	54	50	47
	40	66	66	66	66	66	66	66	66	65	59	54	50	47
	50	60	60	60	60	60	60	60	60	60	59	54	50	47
	60	55	55	55	55	55	55	55	55	55	55	54	50	47
	70	51	51	51	51	51	51	51	51	51	51	51	50	47
	80	48	48	48	48	48	48	48	48	48	48	48	48	47
	90	45	45	45	45	45	45	45	45	45	45	45	45	45

Notes:

1. Tables are based on critical rail span for load combinations as specified in chapter 2 of the ASCE 7-16 and allowable design loads per the 2015 Aluminum Design Manual.
2. Panels are assumed to be in portrait orientation with a maximum length of 82"

Structural ENGINUITY INC
Ingenuity in Engineering

SUNMODO®

Max Rail Spans for SunModo SMR200 Rail System

Table 86a

Mean Roof Height: 15 < h ≤ 30 ft
Roof Angle: 7 < θ ≤ 20 degrees
Exposure Category: C
Panel Orientation: Portrait
North/South Support Y_E = 1
Roof Type : Hip h/B = ≥ 0.8

Roof Wind Zone	Ground Snow Load (psf)	Wind Speed (mph)												
		90	95	100	105	110	115	120	130	140	150	160	170	180
Zone 1	0	111	111	111	111	110	105	101	91	81	74	68	63	59
	10	97	97	97	97	96	95	95	91	81	74	68	63	59
	20	74	74	74	74	74	74	74	74	74	73	68	63	59
	30	74	74	74	74	74	74	74	74	74	73	68	63	59
	40	66	66	66	66	66	66	66	66	66	66	65	63	59
	50	60	60	60	60	60	60	60	60	60	60	60	59	58
	60	55	55	55	55	55	55	55	55	55	55	55	55	55
	70	51	51	51	51	51	51	51	51	51	51	51	51	51
	80	48	48	48	48	48	48	48	48	48	48	48	48	48
	90	45	45	45	45	45	45	45	45	45	45	45	45	45
Zone 2r	0	111	111	108	103	99	94	88	79	71	65	60	55	51
	10	97	97	97	97	96	94	88	79	71	65	60	55	51
	20	74	74	74	74	74	74	74	74	71	65	60	55	51
	30	74	74	74	74	74	74	74	74	71	65	60	55	51
	40	66	66	66	66	66	66	66	66	66	65	60	55	51
	50	60	60	60	60	60	60	60	60	60	60	60	55	51
	60	55	55	55	55	55	55	55	55	55	55	55	55	51
	70	51	51	51	51	51	51	51	51	51	51	51	51	51
	80	48	48	48	48	48	48	48	48	48	48	48	48	48
	90	45	45	45	45	45	45	45	45	45	45	45	45	45
Zones 2e & 3	0	111	109	104	99	94	89	84	75	68	62	57	53	49
	10	97	97	97	97	94	89	84	75	68	62	57	53	49
	20	74	74	74	74	74	74	74	74	68	62	57	53	49
	30	74	74	74	74	74	74	74	74	68	62	57	53	49
	40	66	66	66	66	66	66	66	66	66	62	57	53	49
	50	60	60	60	60	60	60	60	60	60	60	57	53	49
	60	55	55	55	55	55	55	55	55	55	55	55	53	49
	70	51	51	51	51	51	51	51	51	51	51	51	51	49
	80	48	48	48	48	48	48	48	48	48	48	48	48	48
	90	45	45	45	45	45	45	45	45	45	45	45	45	45

Notes:

1. Tables are based on critical rail span for load combinations as specified in chapter 2 of the ASCE 7-16 and allowable design loads per the 2015 Aluminum Design Manual.
2. Panels are assumed to be in portrait orientation with a maximum length of 82"

Structural ENGINUITY INC
Ingenuity in Engineering

SUNMODO®

Max Rail Spans for SunModo SMR200 Rail System

Table 86b

Mean Roof Height: 15 < h ≤ 30 ft
Roof Angle: 7 < θ ≤ 20 degrees
Exposure Category: C
Panel Orientation: Portrait
North/South Support γ_E = 1.5
Roof Type : Hip h/B = ≥ 0.8

Roof Wind Zone	Ground Snow Load (psf)	Wind Speed (mph)												
		90	95	100	105	110	115	120	130	140	150	160	170	180
Zone 1	0	110	104	99	93	86	81	76	68	62	57	53	49	46
	10	97	97	97	93	86	81	76	68	62	57	53	49	46
	20	74	74	74	74	74	74	74	68	62	57	53	49	46
	30	74	74	74	74	74	74	74	68	62	57	53	49	46
	40	66	66	66	66	66	66	66	66	62	57	53	49	46
	50	60	60	60	60	60	60	60	60	60	57	53	49	46
	60	55	55	55	55	55	55	55	55	55	55	53	49	46
	70	51	51	51	51	51	51	51	51	51	51	51	49	46
	80	48	48	48	48	48	48	48	48	48	48	48	48	46
	90	45	45	45	45	45	45	45	45	45	45	45	45	45
Zone 2r	0	98	92	86	80	75	71	67	60	55	50	46	43	40
	10	97	92	86	80	75	71	67	60	55	50	46	43	40
	20	74	74	74	74	74	71	67	60	55	50	46	43	40
	30	74	74	74	74	74	71	67	60	55	50	46	43	40
	40	66	66	66	66	66	66	66	60	55	50	46	43	40
	50	60	60	60	60	60	60	60	60	55	50	46	43	40
	60	55	55	55	55	55	55	55	55	55	50	46	43	40
	70	51	51	51	51	51	51	51	51	51	50	46	43	40
	80	48	48	48	48	48	48	48	48	48	48	46	43	40
	90	45	45	45	45	45	45	45	45	45	45	45	43	40
Zones 2e & 3	0	94	87	81	76	71	67	64	57	52	48	44	41	38
	10	94	87	81	76	71	67	64	57	52	48	44	41	38
	20	74	74	74	74	71	67	64	57	52	48	44	41	38
	30	74	74	74	74	71	67	64	57	52	48	44	41	38
	40	66	66	66	66	66	66	64	57	52	48	44	41	38
	50	60	60	60	60	60	60	60	57	52	48	44	41	38
	60	55	55	55	55	55	55	55	55	52	48	44	41	38
	70	51	51	51	51	51	51	51	51	51	48	44	41	38
	80	48	48	48	48	48	48	48	48	48	48	44	41	38
	90	45	45	45	45	45	45	45	45	45	45	44	41	38

Notes:

1. Tables are based on critical rail span for load combinations as specified in chapter 2 of the ASCE 7-16 and allowable design loads per the 2015 Aluminum Design Manual.
2. Panels are assumed to be in portrait orientation with a maximum length of 82"

Structural ENGINUITY INC
Ingenuity in Engineering

SUNMODO®

Max Rail Spans for SunModo SMR200 Rail System

Table 87a

Mean Roof Height: 15 < h ≤ 30 ft
Roof Angle: 7 < θ ≤ 20 degrees
Exposure Category: D
Panel Orientation: Portrait
North/South Support Y_E = 1
Roof Type : Hip h/B = ≥ 0.8

Roof Wind Zone	Ground Snow Load (psf)	Wind Speed (mph)												
		90	95	100	105	110	115	120	130	140	150	160	170	180
Zone 1	0	111	111	111	106	101	97	90	80	72	66	61	57	53
	10	97	97	97	96	95	94	90	80	72	66	61	57	53
	20	74	74	74	74	74	74	74	74	72	66	61	57	53
	30	74	74	74	74	74	74	74	74	72	66	61	57	53
	40	66	66	66	66	66	66	66	66	66	65	61	57	53
	50	60	60	60	60	60	60	60	60	60	60	59	57	53
	60	55	55	55	55	55	55	55	55	55	55	55	54	53
	70	51	51	51	51	51	51	51	51	51	51	51	51	51
	80	48	48	48	48	48	48	48	48	48	48	48	48	48
	90	45	45	45	45	45	45	45	45	45	45	45	45	45
Zone 2r	0	110	104	100	95	89	83	79	71	64	58	54	50	46
	10	97	97	97	95	89	83	79	71	64	58	54	50	46
	20	74	74	74	74	74	74	74	71	64	58	54	50	46
	30	74	74	74	74	74	74	74	71	64	58	54	50	46
	40	66	66	66	66	66	66	66	66	64	58	54	50	46
	50	60	60	60	60	60	60	60	60	60	58	54	50	46
	60	55	55	55	55	55	55	55	55	55	55	54	50	46
	70	51	51	51	51	51	51	51	51	51	51	51	50	46
	80	48	48	48	48	48	48	48	48	48	48	48	48	46
	90	45	45	45	45	45	45	45	45	45	45	45	45	45
Zones 2e & 3	0	106	101	96	89	84	79	74	67	61	55	51	47	44
	10	97	97	96	89	84	79	74	67	61	55	51	47	44
	20	74	74	74	74	74	74	74	67	61	55	51	47	44
	30	74	74	74	74	74	74	74	67	61	55	51	47	44
	40	66	66	66	66	66	66	66	66	61	55	51	47	44
	50	60	60	60	60	60	60	60	60	60	55	51	47	44
	60	55	55	55	55	55	55	55	55	55	55	51	47	44
	70	51	51	51	51	51	51	51	51	51	51	51	47	44
	80	48	48	48	48	48	48	48	48	48	48	48	47	44
	90	45	45	45	45	45	45	45	45	45	45	45	45	44

Notes:

1. Tables are based on critical rail span for load combinations as specified in chapter 2 of the ASCE 7-16 and allowable design loads per the 2015 Aluminum Design Manual.
2. Panels are assumed to be in portrait orientation with a maximum length of 82"

Structural ENGINUITY INC
Ingenuity in Engineering

SUNMODO®

Max Rail Spans for SunModo SMR200 Rail System

Table 87b

Mean Roof Height: 15 < h ≤ 30 ft
Roof Angle: 7 < θ ≤ 20 degrees
Exposure Category: D
Panel Orientation: Portrait
North/South Support γ_E = 1.5
Roof Type : Hip h/B = ≥ 0.8

Roof Wind Zone	Ground Snow Load (psf)	Wind Speed (mph)												
		90	95	100	105	110	115	120	130	140	150	160	170	180
Zone 1	0	101	95	88	82	76	71	68	61	56	52	48	45	42
	10	97	95	88	82	76	71	68	61	56	52	48	45	42
	20	74	74	74	74	74	71	68	61	56	52	48	45	42
	30	74	74	74	74	74	71	68	61	56	52	48	45	42
	40	66	66	66	66	66	66	66	61	56	52	48	45	42
	50	60	60	60	60	60	60	60	60	56	52	48	45	42
	60	55	55	55	55	55	55	55	55	55	52	48	45	42
	70	51	51	51	51	51	51	51	51	51	51	48	45	42
	80	48	48	48	48	48	48	48	48	48	48	48	45	42
	90	45	45	45	45	45	45	45	45	45	45	45	45	42
Zone 2r	0	88	82	76	72	67	63	60	54	49	45	41	38	36
	10	88	82	76	72	67	63	60	54	49	45	41	38	36
	20	74	74	74	72	67	63	60	54	49	45	41	38	36
	30	74	74	74	72	67	63	60	54	49	45	41	38	36
	40	66	66	66	66	66	63	60	54	49	45	41	38	36
	50	60	60	60	60	60	60	60	54	49	45	41	38	36
	60	55	55	55	55	55	55	55	54	49	45	41	38	36
	70	51	51	51	51	51	51	51	51	49	45	41	38	36
	80	48	48	48	48	48	48	48	48	48	45	41	38	36
	90	45	45	45	45	45	45	45	45	45	45	41	38	36
Zones 2e & 3	0	84	78	72	68	64	60	57	51	47	43	39	36	34
	10	84	78	72	68	64	60	57	51	47	43	39	36	34
	20	74	74	72	68	64	60	57	51	47	43	39	36	34
	30	74	74	72	68	64	60	57	51	47	43	39	36	34
	40	66	66	66	66	64	60	57	51	47	43	39	36	34
	50	60	60	60	60	60	60	57	51	47	43	39	36	34
	60	55	55	55	55	55	55	55	51	47	43	39	36	34
	70	51	51	51	51	51	51	51	51	47	43	39	36	34
	80	48	48	48	48	48	48	48	48	47	43	39	36	34
	90	45	45	45	45	45	45	45	45	45	43	39	36	34

Notes:

1. Tables are based on critical rail span for load combinations as specified in chapter 2 of the ASCE 7-16 and allowable design loads per the 2015 Aluminum Design Manual.
2. Panels are assumed to be in portrait orientation with a maximum length of 82"

Structural ENGINUITY INC
Ingenuity in Engineering

SUNMODO®

Max Rail Spans for SunModo SMR200 Rail System

Table 88a

Mean Roof Height: 15 < h ≤ 30 ft
Roof Angle: 7 < θ ≤ 20 degrees
Exposure Category: B
Panel Orientation: Portrait
North/South Support Y_E = 1
Roof Type : Hip h/B = ≤ 0.5

Roof Wind Zone	Ground Snow Load (psf)	Wind Speed (mph)												
		90	95	100	105	110	115	120	130	140	150	160	170	180
Zone 1	0	111	111	111	111	111	111	111	111	111	109	102	97	89
	10	97	97	97	97	97	97	97	96	95	93	91	90	88
	20	74	74	74	74	74	74	74	74	74	74	74	73	72
	30	74	74	74	74	74	74	74	74	74	74	74	73	72
	40	66	66	66	66	66	66	66	66	66	66	66	65	64
	50	60	60	60	60	60	60	60	60	60	60	60	60	60
	60	55	55	55	55	55	55	55	55	55	55	55	55	55
	70	51	51	51	51	51	51	51	51	51	51	51	51	51
	80	48	48	48	48	48	48	48	48	48	48	48	48	48
	90	45	45	45	45	45	45	45	45	45	45	45	45	45
Zone 2r	0	111	111	111	111	111	111	106	99	90	82	75	69	64
	10	97	97	97	97	97	97	97	96	90	82	75	69	64
	20	74	74	74	74	74	74	74	74	74	74	74	69	64
	30	74	74	74	74	74	74	74	74	74	74	74	69	64
	40	66	66	66	66	66	66	66	66	66	66	66	65	64
	50	60	60	60	60	60	60	60	60	60	60	60	60	60
	60	55	55	55	55	55	55	55	55	55	55	55	55	55
	70	51	51	51	51	51	51	51	51	51	51	51	51	51
	80	48	48	48	48	48	48	48	48	48	48	48	48	48
	90	45	45	45	45	45	45	45	45	45	45	45	45	45
Zones 2e & 3	0	111	111	111	111	111	111	111	111	104	98	90	83	77
	10	97	97	97	97	97	97	97	96	95	93	90	83	77
	20	74	74	74	74	74	74	74	74	74	74	74	73	72
	30	74	74	74	74	74	74	74	74	74	74	74	73	72
	40	66	66	66	66	66	66	66	66	66	66	66	65	64
	50	60	60	60	60	60	60	60	60	60	60	60	60	60
	60	55	55	55	55	55	55	55	55	55	55	55	55	55
	70	51	51	51	51	51	51	51	51	51	51	51	51	51
	80	48	48	48	48	48	48	48	48	48	48	48	48	48
	90	45	45	45	45	45	45	45	45	45	45	45	45	45

Notes:

1. Tables are based on critical rail span for load combinations as specified in chapter 2 of the ASCE 7-16 and allowable design loads per the 2015 Aluminum Design Manual.
2. Panels are assumed to be in portrait orientation with a maximum length of 82"

Structural ENGINUITY INC
Ingenuity in Engineering

SUNMODO®

Max Rail Spans for SunModo SMR200 Rail System

Table 88b

Mean Roof Height: 15 < h ≤ 30 ft
Roof Angle: 7 < θ ≤ 20 degrees
Exposure Category: B
Panel Orientation: Portrait
North/South Support γ_E = 1.5
Roof Type : Hip h/B = ≤ 0.5

Roof Wind Zone	Ground Snow Load (psf)	Wind Speed (mph)												
		90	95	100	105	110	115	120	130	140	150	160	170	180
Zone 1	0	111	111	111	111	111	111	111	103	96	87	80	74	68
	10	97	97	97	97	97	97	97	96	95	87	80	74	68
	20	74	74	74	74	74	74	74	74	74	74	74	73	68
	30	74	74	74	74	74	74	74	74	74	74	74	73	68
	40	66	66	66	66	66	66	66	66	66	66	66	65	64
	50	60	60	60	60	60	60	60	60	60	60	60	60	60
	60	55	55	55	55	55	55	55	55	55	55	55	55	55
	70	51	51	51	51	51	51	51	51	51	51	51	51	51
	80	48	48	48	48	48	48	48	48	48	48	48	48	48
	90	45	45	45	45	45	45	45	45	45	45	45	45	45
Zone 2r	0	111	110	104	100	95	89	84	75	68	62	57	53	49
	10	97	97	97	97	95	89	84	75	68	62	57	53	49
	20	74	74	74	74	74	74	74	74	68	62	57	53	49
	30	74	74	74	74	74	74	74	74	68	62	57	53	49
	40	66	66	66	66	66	66	66	66	66	62	57	53	49
	50	60	60	60	60	60	60	60	60	60	60	57	53	49
	60	55	55	55	55	55	55	55	55	55	55	55	53	49
	70	51	51	51	51	51	51	51	51	51	51	51	51	49
	80	48	48	48	48	48	48	48	48	48	48	48	48	48
	90	45	45	45	45	45	45	45	45	45	45	45	45	45
Zones 2e & 3	0	111	111	111	111	108	103	99	90	82	74	68	63	59
	10	97	97	97	97	97	97	97	90	82	74	68	63	59
	20	74	74	74	74	74	74	74	74	74	74	68	63	59
	30	74	74	74	74	74	74	74	74	74	74	68	63	59
	40	66	66	66	66	66	66	66	66	66	66	66	63	59
	50	60	60	60	60	60	60	60	60	60	60	60	60	59
	60	55	55	55	55	55	55	55	55	55	55	55	55	55
	70	51	51	51	51	51	51	51	51	51	51	51	51	51
	80	48	48	48	48	48	48	48	48	48	48	48	48	48
	90	45	45	45	45	45	45	45	45	45	45	45	45	45

Notes:

1. Tables are based on critical rail span for load combinations as specified in chapter 2 of the ASCE 7-16 and allowable design loads per the 2015 Aluminum Design Manual.
2. Panels are assumed to be in portrait orientation with a maximum length of 82"

Structural ENGINUITY INC
Ingenuity in Engineering

SUNMODO®

Max Rail Spans for SunModo SMR200 Rail System

Table 89a

Mean Roof Height: 15 < h ≤ 30 ft
Roof Angle: 7 < θ ≤ 20 degrees
Exposure Category: C
Panel Orientation: Portrait
North/South Support Y_E = 1
Roof Type : Hip h/B = ≤ 0.5

Roof Wind Zone	Ground Snow Load (psf)	Wind Speed (mph)												
		90	95	100	105	110	115	120	130	140	150	160	170	180
Zone 1	0	111	111	111	111	111	111	111	106	99	91	84	77	71
	10	97	97	97	97	96	95	95	93	90	88	84	77	71
	20	74	74	74	74	74	74	74	74	74	73	69	68	66
	30	74	74	74	74	74	74	74	74	74	73	69	68	66
	40	66	66	66	66	66	66	66	66	66	65	63	62	61
	50	60	60	60	60	60	60	60	60	60	60	59	58	57
	60	55	55	55	55	55	55	55	55	55	55	55	55	54
	70	51	51	51	51	51	51	51	51	51	51	51	51	51
	80	48	48	48	48	48	48	48	48	48	48	48	48	48
	90	45	45	45	45	45	45	45	45	45	45	45	45	45
Zone 2r	0	111	111	108	103	99	94	88	79	71	65	60	55	51
	10	97	97	97	97	96	94	88	79	71	65	60	55	51
	20	74	74	74	74	74	74	74	74	71	65	60	55	51
	30	74	74	74	74	74	74	74	74	71	65	60	55	51
	40	66	66	66	66	66	66	66	66	66	65	60	55	51
	50	60	60	60	60	60	60	60	60	60	60	59	55	51
	60	55	55	55	55	55	55	55	55	55	55	55	55	51
	70	51	51	51	51	51	51	51	51	51	51	51	51	51
	80	48	48	48	48	48	48	48	48	48	48	48	48	48
	90	45	45	45	45	45	45	45	45	45	45	45	45	45
Zones 2e & 3	0	111	111	111	111	111	107	103	95	86	78	72	66	61
	10	97	97	97	97	96	95	95	93	86	78	72	66	61
	20	74	74	74	74	74	74	74	74	74	73	69	66	61
	30	74	74	74	74	74	74	74	74	74	73	69	66	61
	40	66	66	66	66	66	66	66	66	66	65	63	62	61
	50	60	60	60	60	60	60	60	60	60	60	59	58	57
	60	55	55	55	55	55	55	55	55	55	55	55	55	54
	70	51	51	51	51	51	51	51	51	51	51	51	51	51
	80	48	48	48	48	48	48	48	48	48	48	48	48	48
	90	45	45	45	45	45	45	45	45	45	45	45	45	45

Notes:

1. Tables are based on critical rail span for load combinations as specified in chapter 2 of the ASCE 7-16 and allowable design loads per the 2015 Aluminum Design Manual.
2. Panels are assumed to be in portrait orientation with a maximum length of 82"

Structural ENGINUITY INC
Ingenuity in Engineering

SUNMODO®

Max Rail Spans for SunModo SMR200 Rail System

Table 89b

Mean Roof Height: 15 < h ≤ 30 ft
Roof Angle: 7 < θ ≤ 20 degrees
Exposure Category: C
Panel Orientation: Portrait
North/South Support γ_E = 1.5
Roof Type : Hip h/B = ≤ 0.5

Roof Wind Zone	Ground Snow Load (psf)	Wind Speed (mph)												
		90	95	100	105	110	115	120	130	140	150	160	170	180
Zone 1	0	111	111	111	107	103	98	94	84	76	70	64	60	56
	10	97	97	97	97	96	95	94	84	76	70	64	60	56
	20	74	74	74	74	74	74	74	74	74	70	64	60	56
	30	74	74	74	74	74	74	74	74	74	70	64	60	56
	40	66	66	66	66	66	66	66	66	66	65	63	60	56
	50	60	60	60	60	60	60	60	60	60	60	59	58	56
	60	55	55	55	55	55	55	55	55	55	55	55	55	54
	70	51	51	51	51	51	51	51	51	51	51	51	51	51
	80	48	48	48	48	48	48	48	48	48	48	48	48	48
	90	45	45	45	45	45	45	45	45	45	45	45	45	45
Zone 2r	0	98	92	86	80	75	71	67	60	55	50	46	43	40
	10	97	92	86	80	75	71	67	60	55	50	46	43	40
	20	74	74	74	74	74	71	67	60	55	50	46	43	40
	30	74	74	74	74	74	71	67	60	55	50	46	43	40
	40	66	66	66	66	66	66	66	60	55	50	46	43	40
	50	60	60	60	60	60	60	60	60	55	50	46	43	40
	60	55	55	55	55	55	55	55	55	55	50	46	43	40
	70	51	51	51	51	51	51	51	51	51	50	46	43	40
	80	48	48	48	48	48	48	48	48	48	48	46	43	40
	90	45	45	45	45	45	45	45	45	45	45	45	43	40
Zones 2e & 3	0	111	106	101	96	90	85	80	72	65	60	55	51	47
	10	97	97	97	96	90	85	80	72	65	60	55	51	47
	20	74	74	74	74	74	74	74	72	65	60	55	51	47
	30	74	74	74	74	74	74	74	72	65	60	55	51	47
	40	66	66	66	66	66	66	66	66	65	60	55	51	47
	50	60	60	60	60	60	60	60	60	60	60	55	51	47
	60	55	55	55	55	55	55	55	55	55	55	55	51	47
	70	51	51	51	51	51	51	51	51	51	51	51	51	47
	80	48	48	48	48	48	48	48	48	48	48	48	48	47
	90	45	45	45	45	45	45	45	45	45	45	45	45	45

Notes:

1. Tables are based on critical rail span for load combinations as specified in chapter 2 of the ASCE 7-16 and allowable design loads per the 2015 Aluminum Design Manual.
2. Panels are assumed to be in portrait orientation with a maximum length of 82"

Structural ENGINUITY INC
Ingenuity in Engineering

SUNMODO®

Max Rail Spans for SunModo SMR200 Rail System

Table 90a

Mean Roof Height: 15 < h ≤ 30 ft
Roof Angle: 7 < θ ≤ 20 degrees
Exposure Category: D
Panel Orientation: Portrait
North/South Support Y_E = 1
Roof Type : Hip h/B = ≤ 0.5

Roof Wind Zone	Ground Snow Load (psf)	Wind Speed (mph)												
		90	95	100	105	110	115	120	130	140	150	160	170	180
Zone 1	0	111	111	111	111	111	110	106	98	89	81	75	69	64
	10	97	97	97	96	95	94	92	90	88	81	75	69	64
	20	74	74	74	74	74	74	74	74	72	69	67	66	64
	30	74	74	74	74	74	74	74	74	72	69	67	66	64
	40	66	66	66	66	66	66	66	66	64	63	62	61	59
	50	60	60	60	60	60	60	60	60	60	59	58	57	56
	60	55	55	55	55	55	55	55	55	55	55	54	53	52
	70	51	51	51	51	51	51	51	51	51	51	51	51	50
	80	48	48	48	48	48	48	48	48	48	48	48	48	48
	90	45	45	45	45	45	45	45	45	45	45	45	45	45
Zone 2r	0	110	104	100	95	89	83	79	71	64	58	54	50	46
	10	97	97	97	95	89	83	79	71	64	58	54	50	46
	20	74	74	74	74	74	74	74	71	64	58	54	50	46
	30	74	74	74	74	74	74	74	71	64	58	54	50	46
	40	66	66	66	66	66	66	66	66	64	58	54	50	46
	50	60	60	60	60	60	60	60	60	60	58	54	50	46
	60	55	55	55	55	55	55	55	55	55	55	54	50	46
	70	51	51	51	51	51	51	51	51	51	51	51	50	46
	80	48	48	48	48	48	48	48	48	48	48	48	48	46
	90	45	45	45	45	45	45	45	45	45	45	45	45	45
Zones 2e & 3	0	111	111	111	107	103	99	94	84	76	70	64	59	55
	10	97	97	97	96	95	94	92	84	76	70	64	59	55
	20	74	74	74	74	74	74	74	74	72	69	64	59	55
	30	74	74	74	74	74	74	74	74	72	69	64	59	55
	40	66	66	66	66	66	66	66	66	64	63	62	59	55
	50	60	60	60	60	60	60	60	60	60	59	58	57	55
	60	55	55	55	55	55	55	55	55	55	55	54	53	52
	70	51	51	51	51	51	51	51	51	51	51	51	51	50
	80	48	48	48	48	48	48	48	48	48	48	48	48	48
	90	45	45	45	45	45	45	45	45	45	45	45	45	45

Notes:

1. Tables are based on critical rail span for load combinations as specified in chapter 2 of the ASCE 7-16 and allowable design loads per the 2015 Aluminum Design Manual.
2. Panels are assumed to be in portrait orientation with a maximum length of 82"

Structural ENGINUITY INC
Ingenuity in Engineering

SUNMODO®

Max Rail Spans for SunModo SMR200 Rail System

Table 90b

Mean Roof Height: 15 < h ≤ 30 ft
Roof Angle: 7 < θ ≤ 20 degrees
Exposure Category: D
Panel Orientation: Portrait
North/South Support γ_E = 1.5
Roof Type : Hip h/B = ≤ 0.5

Roof Wind Zone	Ground Snow Load (psf)	Wind Speed (mph)												
		90	95	100	105	110	115	120	130	140	150	160	170	180
Zone 1	0	111	109	104	99	94	89	84	75	68	63	58	54	51
	10	97	97	97	96	94	89	84	75	68	63	58	54	51
	20	74	74	74	74	74	74	74	74	68	63	58	54	51
	30	74	74	74	74	74	74	74	74	68	63	58	54	51
	40	66	66	66	66	66	66	66	66	64	63	58	54	51
	50	60	60	60	60	60	60	60	60	60	59	58	54	51
	60	55	55	55	55	55	55	55	55	55	55	54	53	51
	70	51	51	51	51	51	51	51	51	51	51	51	51	50
	80	48	48	48	48	48	48	48	48	48	48	48	48	48
	90	45	45	45	45	45	45	45	45	45	45	45	45	45
Zone 2r	0	88	82	76	72	67	63	60	54	49	45	41	38	36
	10	88	82	76	72	67	63	60	54	49	45	41	38	36
	20	74	74	74	72	67	63	60	54	49	45	41	38	36
	30	74	74	74	72	67	63	60	54	49	45	41	38	36
	40	66	66	66	66	66	63	60	54	49	45	41	38	36
	50	60	60	60	60	60	60	60	54	49	45	41	38	36
	60	55	55	55	55	55	55	55	54	49	45	41	38	36
	70	51	51	51	51	51	51	51	51	49	45	41	38	36
	80	48	48	48	48	48	48	48	48	48	45	41	38	36
	90	45	45	45	45	45	45	45	45	45	45	41	38	36
Zones 2e & 3	0	103	98	92	86	80	76	72	65	59	54	49	46	43
	10	97	97	92	86	80	76	72	65	59	54	49	46	43
	20	74	74	74	74	74	74	72	65	59	54	49	46	43
	30	74	74	74	74	74	74	72	65	59	54	49	46	43
	40	66	66	66	66	66	66	66	65	59	54	49	46	43
	50	60	60	60	60	60	60	60	60	59	54	49	46	43
	60	55	55	55	55	55	55	55	55	55	54	49	46	43
	70	51	51	51	51	51	51	51	51	51	51	49	46	43
	80	48	48	48	48	48	48	48	48	48	48	48	46	43
	90	45	45	45	45	45	45	45	45	45	45	45	45	43

Notes:

1. Tables are based on critical rail span for load combinations as specified in chapter 2 of the ASCE 7-16 and allowable design loads per the 2015 Aluminum Design Manual.
2. Panels are assumed to be in portrait orientation with a maximum length of 82"

Structural ENGINUITY INC
Ingenuity in Engineering

SUNMODO®

Max Rail Spans for SunModo SMR200 Rail System

Table 91a

Mean Roof Height: 15 < h ≤ 30 ft
Roof Angle: 20 < θ ≤ 27 degrees
Exposure Category: B
Panel Orientation: Portrait
North/South Support Y_E = 1
Roof Type : Hip

Roof Wind Zone	Ground Snow Load (psf)	Wind Speed (mph)												
		90	95	100	105	110	115	120	130	140	150	160	170	180
Zone 1	0	111	111	111	111	111	111	111	111	111	111	106	100	94
	10	106	106	106	106	106	106	106	106	104	102	100	98	94
	20	88	88	88	88	88	88	88	88	87	86	85	83	82
	30	75	75	75	75	75	75	75	75	75	75	75	74	73
	40	66	66	66	66	66	66	66	66	66	66	66	66	66
	50	60	60	60	60	60	60	60	60	60	60	60	60	60
	60	55	55	55	55	55	55	55	55	55	55	55	55	55
	70	52	52	52	52	52	52	52	52	52	52	52	52	52
	80	48	48	48	48	48	48	48	48	48	48	48	48	48
	90	46	46	46	46	46	46	46	46	46	46	46	46	46
Zones 2e, 2r, & 3	0	111	111	111	111	111	111	111	108	101	93	85	78	72
	10	106	106	106	106	106	106	106	106	101	93	85	78	72
	20	88	88	88	88	88	88	88	88	87	86	85	78	72
	30	75	75	75	75	75	75	75	75	75	75	75	74	72
	40	66	66	66	66	66	66	66	66	66	66	66	66	66
	50	60	60	60	60	60	60	60	60	60	60	60	60	60
	60	55	55	55	55	55	55	55	55	55	55	55	55	55
	70	52	52	52	52	52	52	52	52	52	52	52	52	52
	80	48	48	48	48	48	48	48	48	48	48	48	48	48
	90	46	46	46	46	46	46	46	46	46	46	46	46	46

Notes:

1. Tables are based on critical rail span for load combinations as specified in chapter 2 of the ASCE 7-16 and allowable design loads per the 2015 Aluminum Design Manual.
2. Panels are assumed to be in portrait orientation with a maximum length of 82"

Structural ENGINUITY INC
Ingenuity in Engineering

SUNMODO®

Max Rail Spans for SunModo SMR200 Rail System

Table 91b

Mean Roof Height: 15 < h ≤ 30 ft
Roof Angle: 20 < θ ≤ 27 degrees
Exposure Category: B
Panel Orientation: Portrait
North/South Support γ_E = 1.5
Roof Type : Hip

Roof Wind Zone	Ground Snow Load (psf)	Wind Speed (mph)												
		90	95	100	105	110	115	120	130	140	150	160	170	180
Zone 1	0	111	111	111	111	111	111	111	107	100	91	83	76	71
	10	106	106	106	106	106	106	106	106	100	91	83	76	71
	20	88	88	88	88	88	88	88	88	87	86	83	76	71
	30	75	75	75	75	75	75	75	75	75	75	75	74	71
	40	66	66	66	66	66	66	66	66	66	66	66	66	66
	50	60	60	60	60	60	60	60	60	60	60	60	60	60
	60	55	55	55	55	55	55	55	55	55	55	55	55	55
	70	52	52	52	52	52	52	52	52	52	52	52	52	52
	80	48	48	48	48	48	48	48	48	48	48	48	48	48
	90	46	46	46	46	46	46	46	46	46	46	46	46	46
Zones 2e, 2r, & 3	0	111	111	111	109	105	100	95	85	77	70	65	60	55
	10	106	106	106	106	105	100	95	85	77	70	65	60	55
	20	88	88	88	88	88	88	88	85	77	70	65	60	55
	30	75	75	75	75	75	75	75	75	75	70	65	60	55
	40	66	66	66	66	66	66	66	66	66	66	65	60	55
	50	60	60	60	60	60	60	60	60	60	60	60	60	55
	60	55	55	55	55	55	55	55	55	55	55	55	55	55
	70	52	52	52	52	52	52	52	52	52	52	52	52	52
	80	48	48	48	48	48	48	48	48	48	48	48	48	48
	90	46	46	46	46	46	46	46	46	46	46	46	46	46

Notes:

1. Tables are based on critical rail span for load combinations as specified in chapter 2 of the ASCE 7-16 and allowable design loads per the 2015 Aluminum Design Manual.
2. Panels are assumed to be in portrait orientation with a maximum length of 82"

Structural ENGINUITY INC
Ingenuity in Engineering

SUNMODO®

Max Rail Spans for SunModo SMR200 Rail System

Table 92a

Mean Roof Height: 15 < h ≤ 30 ft
Roof Angle: 20 < θ ≤ 27 degrees
Exposure Category: C
Panel Orientation: Portrait
North/South Support Y_E = 1
Roof Type : Hip

Roof Wind Zone	Ground Snow Load (psf)	Wind Speed (mph)												
		90	95	100	105	110	115	120	130	140	150	160	170	180
Zone 1	0	111	111	111	111	111	111	111	111	103	95	87	80	74
	10	106	106	106	106	106	105	104	102	99	95	87	80	74
	20	88	88	88	88	88	88	87	85	84	82	80	78	74
	30	75	75	75	75	75	75	75	75	74	73	72	70	69
	40	66	66	66	66	66	66	66	66	66	66	65	64	63
	50	60	60	60	60	60	60	60	60	60	60	60	59	59
	60	55	55	55	55	55	55	55	55	55	55	55	55	55
	70	52	52	52	52	52	52	52	52	52	52	52	52	52
	80	48	48	48	48	48	48	48	48	48	48	48	48	48
	90	46	46	46	46	46	46	46	46	46	46	46	46	46
Zones 2e, 2r, & 3	0	111	111	111	111	108	104	99	89	81	74	68	62	58
	10	106	106	106	106	106	104	99	89	81	74	68	62	58
	20	88	88	88	88	88	88	87	85	81	74	68	62	58
	30	75	75	75	75	75	75	75	75	74	73	68	62	58
	40	66	66	66	66	66	66	66	66	66	66	65	62	58
	50	60	60	60	60	60	60	60	60	60	60	60	59	58
	60	55	55	55	55	55	55	55	55	55	55	55	55	55
	70	52	52	52	52	52	52	52	52	52	52	52	52	52
	80	48	48	48	48	48	48	48	48	48	48	48	48	48
	90	46	46	46	46	46	46	46	46	46	46	46	46	46

Notes:

1. Tables are based on critical rail span for load combinations as specified in chapter 2 of the ASCE 7-16 and allowable design loads per the 2015 Aluminum Design Manual.
2. Panels are assumed to be in portrait orientation with a maximum length of 82"

Structural ENGINUITY INC
Ingenuity in Engineering

SUNMODO®

Max Rail Spans for SunModo SMR200 Rail System

Table 92b

Mean Roof Height: 15 < h ≤ 30 ft
Roof Angle: 20 < θ ≤ 27 degrees
Exposure Category: C
Panel Orientation: Portrait
North/South Support γ_E = 1.5
Roof Type : Hip

Roof Wind Zone	Ground Snow Load (psf)	Wind Speed (mph)												
		90	95	100	105	110	115	120	130	140	150	160	170	180
Zone 1	0	111	111	111	111	107	102	98	88	79	72	66	61	56
	10	106	106	106	106	106	102	98	88	79	72	66	61	56
	20	88	88	88	88	88	88	87	85	79	72	66	61	56
	30	75	75	75	75	75	75	75	75	74	72	66	61	56
	40	66	66	66	66	66	66	66	66	66	66	65	61	56
	50	60	60	60	60	60	60	60	60	60	60	60	59	56
	60	55	55	55	55	55	55	55	55	55	55	55	55	55
	70	52	52	52	52	52	52	52	52	52	52	52	52	52
	80	48	48	48	48	48	48	48	48	48	48	48	48	48
	90	46	46	46	46	46	46	46	46	46	46	46	46	46
Zones 2e, 2r, & 3	0	108	102	97	91	85	80	76	68	62	56	52	48	44
	10	106	102	97	91	85	80	76	68	62	56	52	48	44
	20	88	88	88	88	85	80	76	68	62	56	52	48	44
	30	75	75	75	75	75	75	75	68	62	56	52	48	44
	40	66	66	66	66	66	66	66	66	62	56	52	48	44
	50	60	60	60	60	60	60	60	60	60	56	52	48	44
	60	55	55	55	55	55	55	55	55	55	55	52	48	44
	70	52	52	52	52	52	52	52	52	52	52	52	48	44
	80	48	48	48	48	48	48	48	48	48	48	48	48	44
	90	46	46	46	46	46	46	46	46	46	46	46	46	44

Notes:

1. Tables are based on critical rail span for load combinations as specified in chapter 2 of the ASCE 7-16 and allowable design loads per the 2015 Aluminum Design Manual.
2. Panels are assumed to be in portrait orientation with a maximum length of 82"

Structural ENGINUITY INC
Ingenuity in Engineering

SUNMODO®

Max Rail Spans for SunModo SMR200 Rail System

Table 93a

Mean Roof Height: 15 < h ≤ 30 ft
Roof Angle: 20 < θ ≤ 27 degrees
Exposure Category: D
Panel Orientation: Portrait
North/South Support Y_E = 1
Roof Type : Hip

Roof Wind Zone	Ground Snow Load (psf)	Wind Speed (mph)												
		90	95	100	105	110	115	120	130	140	150	160	170	180
Zone 1	0	111	111	111	111	111	111	110	102	93	85	78	71	66
	10	106	106	106	105	104	103	101	99	93	85	78	71	66
	20	88	88	88	88	87	86	85	84	82	80	78	71	66
	30	75	75	75	75	75	75	75	74	73	71	70	68	66
	40	66	66	66	66	66	66	66	66	66	65	64	63	61
	50	60	60	60	60	60	60	60	60	60	60	59	58	57
	60	55	55	55	55	55	55	55	55	55	55	55	55	54
	70	52	52	52	52	52	52	52	52	52	52	52	52	51
	80	48	48	48	48	48	48	48	48	48	48	48	48	48
	90	46	46	46	46	46	46	46	46	46	46	46	46	46
Zones 2e, 2r, & 3	0	111	111	109	104	100	94	89	80	72	66	60	56	52
	10	106	106	106	104	100	94	89	80	72	66	60	56	52
	20	88	88	88	88	87	86	85	80	72	66	60	56	52
	30	75	75	75	75	75	75	75	74	72	66	60	56	52
	40	66	66	66	66	66	66	66	66	66	65	60	56	52
	50	60	60	60	60	60	60	60	60	60	60	59	56	52
	60	55	55	55	55	55	55	55	55	55	55	55	55	52
	70	52	52	52	52	52	52	52	52	52	52	52	52	51
	80	48	48	48	48	48	48	48	48	48	48	48	48	48
	90	46	46	46	46	46	46	46	46	46	46	46	46	46

Notes:

1. Tables are based on critical rail span for load combinations as specified in chapter 2 of the ASCE 7-16 and allowable design loads per the 2015 Aluminum Design Manual.
2. Panels are assumed to be in portrait orientation with a maximum length of 82"

Structural ENGINUITY INC
Ingenuity in Engineering

SUNMODO®

Max Rail Spans for SunModo SMR200 Rail System

Table 93b

Mean Roof Height: 15 < h ≤ 30 ft
Roof Angle: 20 < θ ≤ 27 degrees
Exposure Category: D
Panel Orientation: Portrait
North/South Support γ_E = 1.5
Roof Type : Hip

Roof Wind Zone	Ground Snow Load (psf)	Wind Speed (mph)												
		90	95	100	105	110	115	120	130	140	150	160	170	180
Zone 1	0	111	111	108	103	99	93	87	78	71	64	59	54	50
	10	106	106	106	103	99	93	87	78	71	64	59	54	50
	20	88	88	88	88	87	86	85	78	71	64	59	54	50
	30	75	75	75	75	75	75	75	74	71	64	59	54	50
	40	66	66	66	66	66	66	66	66	66	64	59	54	50
	50	60	60	60	60	60	60	60	60	60	60	59	54	50
	60	55	55	55	55	55	55	55	55	55	55	55	54	50
	70	52	52	52	52	52	52	52	52	52	52	52	52	50
	80	48	48	48	48	48	48	48	48	48	48	48	48	48
	90	46	46	46	46	46	46	46	46	46	46	46	46	46
Zones 2e, 2r, & 3	0	100	93	86	81	76	72	68	61	55	50	46	43	40
	10	100	93	86	81	76	72	68	61	55	50	46	43	40
	20	88	88	86	81	76	72	68	61	55	50	46	43	40
	30	75	75	75	75	75	72	68	61	55	50	46	43	40
	40	66	66	66	66	66	66	66	61	55	50	46	43	40
	50	60	60	60	60	60	60	60	60	55	50	46	43	40
	60	55	55	55	55	55	55	55	55	55	50	46	43	40
	70	52	52	52	52	52	52	52	52	52	50	46	43	40
	80	48	48	48	48	48	48	48	48	48	48	46	43	40
	90	46	46	46	46	46	46	46	46	46	46	46	43	40

Notes:

1. Tables are based on critical rail span for load combinations as specified in chapter 2 of the ASCE 7-16 and allowable design loads per the 2015 Aluminum Design Manual.
2. Panels are assumed to be in portrait orientation with a maximum length of 82"

Structural ENGINUITY INC
Ingenuity in Engineering

SUNMODO®

Max Rail Spans for SunModo SMR200 Rail System

Table 94a

Mean Roof Height: 15 < h ≤ 30 ft
Roof Angle: 27 < θ ≤ 45 degrees
Exposure Category: B
Panel Orientation: Portrait
North/South Support Y_E = 1
Roof Type : Hip

Roof Wind Zone	Ground Snow Load (psf)	Wind Speed (mph)												
		90	95	100	105	110	115	120	130	140	150	160	170	180
Zone 1	0	111	111	111	111	111	111	111	111	111	107	99	92	85
	10	107	107	107	107	107	107	107	107	107	104	99	92	85
	20	92	92	92	92	92	92	92	92	90	89	88	86	85
	30	79	79	79	79	79	79	79	79	79	79	78	77	76
	40	70	70	70	70	70	70	70	70	70	70	70	70	69
	50	64	64	64	64	64	64	64	64	64	64	64	64	64
	60	59	59	59	59	59	59	59	59	59	59	59	59	59
	70	55	55	55	55	55	55	55	55	55	55	55	55	55
	80	52	52	52	52	52	52	52	52	52	52	52	52	52
	90	49	49	49	49	49	49	49	49	49	49	49	49	49
Zone 2e	0	111	111	111	111	111	111	111	111	111	110	101	92	84
	10	107	107	107	107	107	107	107	107	107	104	101	92	84
	20	92	92	92	92	92	92	92	92	90	89	88	86	84
	30	79	79	79	79	79	79	79	79	79	79	78	77	76
	40	70	70	70	70	70	70	70	70	70	70	70	70	69
	50	64	64	64	64	64	64	64	64	64	64	64	64	64
	60	59	59	59	59	59	59	59	59	59	59	59	59	59
	70	55	55	55	55	55	55	55	55	55	55	55	55	55
	80	52	52	52	52	52	52	52	52	52	52	52	52	52
	90	49	49	49	49	49	49	49	49	49	49	49	49	49
Zone 2r	0	111	111	111	111	111	111	111	105	95	86	79	73	67
	10	107	107	107	107	107	107	107	105	95	86	79	73	67
	20	92	92	92	92	92	92	92	92	90	86	79	73	67
	30	79	79	79	79	79	79	79	79	79	79	78	73	67
	40	70	70	70	70	70	70	70	70	70	70	70	70	67
	50	64	64	64	64	64	64	64	64	64	64	64	64	64
	60	59	59	59	59	59	59	59	59	59	59	59	59	59
	70	55	55	55	55	55	55	55	55	55	55	55	55	55
	80	52	52	52	52	52	52	52	52	52	52	52	52	52
	90	49	49	49	49	49	49	49	49	49	49	49	49	49
Zone 3	0	111	111	111	111	111	111	111	111	105	93	83	75	69
	10	107	107	107	107	107	107	107	107	105	93	83	75	69
	20	92	92	92	92	92	92	92	92	90	89	83	75	69
	30	79	79	79	79	79	79	79	79	79	79	78	75	69
	40	70	70	70	70	70	70	70	70	70	70	70	70	69
	50	64	64	64	64	64	64	64	64	64	64	64	64	64
	60	59	59	59	59	59	59	59	59	59	59	59	59	59
	70	55	55	55	55	55	55	55	55	55	55	55	55	55
	80	52	52	52	52	52	52	52	52	52	52	52	52	52
	90	49	49	49	49	49	49	49	49	49	49	49	49	49

Notes:

1. Tables are based on critical rail span for load combinations as specified in chapter 2 of the ASCE 7-16 and allowable design loads per the 2015 Aluminum Design Manual.
2. Panels are assumed to be in portrait orientation with a maximum length of 82"

Structural ENGINUITY INC
Ingenuity in Engineering

SUNMODO®

Max Rail Spans for SunModo SMR200 Rail System

Table 94b

Mean Roof Height: 15 < h ≤ 30 ft
Roof Angle: 27 < θ ≤ 45 degrees
Exposure Category: B
Panel Orientation: Portrait
North/South Support γ_E = 1.5
Roof Type : Hip

Roof Wind Zone	Ground Snow Load (psf)	Wind Speed (mph)												
		90	95	100	105	110	115	120	130	140	150	160	170	180
Zone 1	0	111	111	111	111	111	111	109	100	91	83	76	70	65
	10	107	107	107	107	107	107	107	100	91	83	76	70	65
	20	92	92	92	92	92	92	92	92	90	83	76	70	65
	30	79	79	79	79	79	79	79	79	79	79	76	70	65
	40	70	70	70	70	70	70	70	70	70	70	70	70	65
	50	64	64	64	64	64	64	64	64	64	64	64	64	64
	60	59	59	59	59	59	59	59	59	59	59	59	59	59
	70	55	55	55	55	55	55	55	55	55	55	55	55	55
	80	52	52	52	52	52	52	52	52	52	52	52	52	52
	90	49	49	49	49	49	49	49	49	49	49	49	49	49
Zone 2e	0	111	111	111	111	111	111	111	102	91	81	74	67	62
	10	107	107	107	107	107	107	107	102	91	81	74	67	62
	20	92	92	92	92	92	92	92	92	90	81	74	67	62
	30	79	79	79	79	79	79	79	79	79	79	74	67	62
	40	70	70	70	70	70	70	70	70	70	70	70	67	62
	50	64	64	64	64	64	64	64	64	64	64	64	64	62
	60	59	59	59	59	59	59	59	59	59	59	59	59	59
	70	55	55	55	55	55	55	55	55	55	55	55	55	55
	80	52	52	52	52	52	52	52	52	52	52	52	52	52
	90	49	49	49	49	49	49	49	49	49	49	49	49	49
Zone 2r	0	111	111	111	106	100	94	89	79	72	65	60	55	51
	10	107	107	107	106	100	94	89	79	72	65	60	55	51
	20	92	92	92	92	92	92	89	79	72	65	60	55	51
	30	79	79	79	79	79	79	79	79	72	65	60	55	51
	40	70	70	70	70	70	70	70	70	70	65	60	55	51
	50	64	64	64	64	64	64	64	64	64	64	60	55	51
	60	59	59	59	59	59	59	59	59	59	59	59	55	51
	70	55	55	55	55	55	55	55	55	55	55	55	55	51
	80	52	52	52	52	52	52	52	52	52	52	52	52	51
	90	49	49	49	49	49	49	49	49	49	49	49	49	49
Zone 3	0	111	111	111	111	109	103	96	84	74	66	60	55	50
	10	107	107	107	107	107	103	96	84	74	66	60	55	50
	20	92	92	92	92	92	92	92	84	74	66	60	55	50
	30	79	79	79	79	79	79	79	79	74	66	60	55	50
	40	70	70	70	70	70	70	70	70	70	66	60	55	50
	50	64	64	64	64	64	64	64	64	64	64	60	55	50
	60	59	59	59	59	59	59	59	59	59	59	59	55	50
	70	55	55	55	55	55	55	55	55	55	55	55	55	50
	80	52	52	52	52	52	52	52	52	52	52	52	52	50
	90	49	49	49	49	49	49	49	49	49	49	49	49	49

Notes:

1. Tables are based on critical rail span for load combinations as specified in chapter 2 of the ASCE 7-16 and allowable design loads per the 2015 Aluminum Design Manual.
2. Panels are assumed to be in portrait orientation with a maximum length of 82"

Structural ENGINUITY INC
Ingenuity in Engineering

SUNMODO®

Max Rail Spans for SunModo SMR200 Rail System

Table 95a

Mean Roof Height: 15 < h ≤ 30 ft
Roof Angle: 27 < θ ≤ 45 degrees
Exposure Category: C
Panel Orientation: Portrait
North/South Support γ_E = 1
Roof Type : Hip

Roof Wind Zone	Ground Snow Load (psf)	Wind Speed (mph)												
		90	95	100	105	110	115	120	130	140	150	160	170	180
Zone 1	0	111	111	111	111	111	111	111	105	95	87	80	74	68
	10	107	107	107	107	107	107	106	104	95	87	80	74	68
	20	92	92	92	92	92	91	90	89	87	85	80	74	68
	30	79	79	79	79	79	79	79	79	77	76	75	73	68
	40	70	70	70	70	70	70	70	70	70	69	68	67	66
	50	64	64	64	64	64	64	64	64	64	64	63	63	62
	60	59	59	59	59	59	59	59	59	59	59	59	59	58
	70	55	55	55	55	55	55	55	55	55	55	55	55	55
	80	52	52	52	52	52	52	52	52	52	52	52	52	52
	90	49	49	49	49	49	49	49	49	49	49	49	49	49
Zone 2e	0	111	111	111	111	111	111	111	107	96	86	78	71	65
	10	107	107	107	107	107	107	106	104	96	86	78	71	65
	20	92	92	92	92	92	91	90	89	87	85	78	71	65
	30	79	79	79	79	79	79	79	79	77	76	75	71	65
	40	70	70	70	70	70	70	70	70	70	69	68	67	65
	50	64	64	64	64	64	64	64	64	64	64	63	63	62
	60	59	59	59	59	59	59	59	59	59	59	59	59	58
	70	55	55	55	55	55	55	55	55	55	55	55	55	55
	80	52	52	52	52	52	52	52	52	52	52	52	52	52
	90	49	49	49	49	49	49	49	49	49	49	49	49	49
Zone 2r	0	111	111	111	110	105	99	93	83	75	68	63	58	53
	10	107	107	107	107	105	99	93	83	75	68	63	58	53
	20	92	92	92	92	92	91	90	83	75	68	63	58	53
	30	79	79	79	79	79	79	79	79	75	68	63	58	53
	40	70	70	70	70	70	70	70	70	70	68	63	58	53
	50	64	64	64	64	64	64	64	64	64	64	63	58	53
	60	59	59	59	59	59	59	59	59	59	59	59	58	53
	70	55	55	55	55	55	55	55	55	55	55	55	55	53
	80	52	52	52	52	52	52	52	52	52	52	52	52	52
	90	49	49	49	49	49	49	49	49	49	49	49	49	49
Zone 3	0	111	111	111	111	111	108	102	89	78	70	63	58	53
	10	107	107	107	107	107	107	102	89	78	70	63	58	53
	20	92	92	92	92	92	91	90	89	78	70	63	58	53
	30	79	79	79	79	79	79	79	79	77	70	63	58	53
	40	70	70	70	70	70	70	70	70	70	69	63	58	53
	50	64	64	64	64	64	64	64	64	64	64	63	58	53
	60	59	59	59	59	59	59	59	59	59	59	59	58	53
	70	55	55	55	55	55	55	55	55	55	55	55	55	53
	80	52	52	52	52	52	52	52	52	52	52	52	52	52
	90	49	49	49	49	49	49	49	49	49	49	49	49	49

Notes:

1. Tables are based on critical rail span for load combinations as specified in chapter 2 of the ASCE 7-16 and allowable design loads per the 2015 Aluminum Design Manual.
2. Panels are assumed to be in portrait orientation with a maximum length of 82"

Structural ENGINUITY INC
Ingenuity in Engineering

SUNMODO®

Max Rail Spans for SunModo SMR200 Rail System

Table 95b

Mean Roof Height: 15 < h ≤ 30 ft
Roof Angle: 27 < θ ≤ 45 degrees
Exposure Category: C
Panel Orientation: Portrait
North/South Support γ_E = 1.5
Roof Type : Hip

Roof Wind Zone	Ground Snow Load (psf)	Wind Speed (mph)												
		90	95	100	105	110	115	120	130	140	150	160	170	180
Zone 1	0	111	111	111	106	100	94	89	80	73	67	61	57	53
	10	107	107	107	106	100	94	89	80	73	67	61	57	53
	20	92	92	92	92	92	91	89	80	73	67	61	57	53
	30	79	79	79	79	79	79	79	79	73	67	61	57	53
	40	70	70	70	70	70	70	70	70	70	67	61	57	53
	50	64	64	64	64	64	64	64	64	64	64	61	57	53
	60	59	59	59	59	59	59	59	59	59	59	59	57	53
	70	55	55	55	55	55	55	55	55	55	55	55	55	53
	80	52	52	52	52	52	52	52	52	52	52	52	52	52
	90	49	49	49	49	49	49	49	49	49	49	49	49	49
Zone 2e	0	111	111	111	108	102	95	89	78	70	63	57	52	48
	10	107	107	107	107	102	95	89	78	70	63	57	52	48
	20	92	92	92	92	92	91	89	78	70	63	57	52	48
	30	79	79	79	79	79	79	79	78	70	63	57	52	48
	40	70	70	70	70	70	70	70	70	70	63	57	52	48
	50	64	64	64	64	64	64	64	64	64	63	57	52	48
	60	59	59	59	59	59	59	59	59	59	59	57	52	48
	70	55	55	55	55	55	55	55	55	55	55	55	52	48
	80	52	52	52	52	52	52	52	52	52	52	52	52	48
	90	49	49	49	49	49	49	49	49	49	49	49	49	48
Zone 2r	0	105	97	91	85	79	75	70	63	57	52	48	44	41
	10	105	97	91	85	79	75	70	63	57	52	48	44	41
	20	92	92	91	85	79	75	70	63	57	52	48	44	41
	30	79	79	79	79	79	75	70	63	57	52	48	44	41
	40	70	70	70	70	70	70	70	63	57	52	48	44	41
	50	64	64	64	64	64	64	64	63	57	52	48	44	41
	60	59	59	59	59	59	59	59	59	57	52	48	44	41
	70	55	55	55	55	55	55	55	55	55	52	48	44	41
	80	52	52	52	52	52	52	52	52	52	52	48	44	41
	90	49	49	49	49	49	49	49	49	49	49	48	44	41
Zone 3	0	111	107	98	90	84	78	73	64	57	51	47	43	39
	10	107	107	98	90	84	78	73	64	57	51	47	43	39
	20	92	92	92	90	84	78	73	64	57	51	47	43	39
	30	79	79	79	79	79	78	73	64	57	51	47	43	39
	40	70	70	70	70	70	70	70	64	57	51	47	43	39
	50	64	64	64	64	64	64	64	64	57	51	47	43	39
	60	59	59	59	59	59	59	59	59	57	51	47	43	39
	70	55	55	55	55	55	55	55	55	55	51	47	43	39
	80	52	52	52	52	52	52	52	52	52	51	47	43	39
	90	49	49	49	49	49	49	49	49	49	49	47	43	39

Notes:

1. Tables are based on critical rail span for load combinations as specified in chapter 2 of the ASCE 7-16 and allowable design loads per the 2015 Aluminum Design Manual.
2. Panels are assumed to be in portrait orientation with a maximum length of 82"

Structural ENGINUITY INC
Ingenuity in Engineering

SUNMODO®

Max Rail Spans for SunModo SMR200 Rail System

Table 96a

Mean Roof Height: 15 < h ≤ 30 ft
Roof Angle: 27 < θ ≤ 45 degrees
Exposure Category: D
Panel Orientation: Portrait
North/South Support Y_E = 1
Roof Type : Hip

Roof Wind Zone	Ground Snow Load (psf)	Wind Speed (mph)												
		90	95	100	105	110	115	120	130	140	150	160	170	180
Zone 1	0	111	111	111	111	111	108	104	94	85	78	71	66	61
	10	107	107	107	107	106	105	103	94	85	78	71	66	61
	20	92	92	92	91	90	89	88	87	85	78	71	66	61
	30	79	79	79	79	79	79	79	77	76	74	71	66	61
	40	70	70	70	70	70	70	70	70	69	68	67	66	61
	50	64	64	64	64	64	64	64	64	64	63	62	61	60
	60	59	59	59	59	59	59	59	59	59	59	58	58	57
	70	55	55	55	55	55	55	55	55	55	55	55	54	54
	80	52	52	52	52	52	52	52	52	52	52	52	52	51
	90	49	49	49	49	49	49	49	49	49	49	49	49	49
Zone 2e	0	111	111	111	111	111	111	106	94	84	75	68	62	57
	10	107	107	107	107	106	105	103	94	84	75	68	62	57
	20	92	92	92	91	90	89	88	87	84	75	68	62	57
	30	79	79	79	79	79	79	79	77	76	74	68	62	57
	40	70	70	70	70	70	70	70	70	69	68	67	62	57
	50	64	64	64	64	64	64	64	64	64	63	62	61	57
	60	59	59	59	59	59	59	59	59	59	59	58	58	57
	70	55	55	55	55	55	55	55	55	55	55	55	54	54
	80	52	52	52	52	52	52	52	52	52	52	52	52	51
	90	49	49	49	49	49	49	49	49	49	49	49	49	49
Zone 2r	0	111	111	106	100	94	88	83	74	67	61	56	51	48
	10	107	107	106	100	94	88	83	74	67	61	56	51	48
	20	92	92	92	91	90	88	83	74	67	61	56	51	48
	30	79	79	79	79	79	79	79	74	67	61	56	51	48
	40	70	70	70	70	70	70	70	70	67	61	56	51	48
	50	64	64	64	64	64	64	64	64	64	61	56	51	48
	60	59	59	59	59	59	59	59	59	59	59	56	51	48
	70	55	55	55	55	55	55	55	55	55	55	55	51	48
	80	52	52	52	52	52	52	52	52	52	52	52	51	48
	90	49	49	49	49	49	49	49	49	49	49	49	49	48
Zone 3	0	111	111	111	109	102	95	88	77	69	61	56	51	47
	10	107	107	107	107	102	95	88	77	69	61	56	51	47
	20	92	92	92	91	90	89	88	77	69	61	56	51	47
	30	79	79	79	79	79	79	79	77	69	61	56	51	47
	40	70	70	70	70	70	70	70	70	69	61	56	51	47
	50	64	64	64	64	64	64	64	64	64	61	56	51	47
	60	59	59	59	59	59	59	59	59	59	59	56	51	47
	70	55	55	55	55	55	55	55	55	55	55	55	51	47
	80	52	52	52	52	52	52	52	52	52	52	52	51	47
	90	49	49	49	49	49	49	49	49	49	49	49	49	47

Notes:

1. Tables are based on critical rail span for load combinations as specified in chapter 2 of the ASCE 7-16 and allowable design loads per the 2015 Aluminum Design Manual.
2. Panels are assumed to be in portrait orientation with a maximum length of 82"

Structural ENGINUITY INC
Ingenuity in Engineering

SUNMODO®

Max Rail Spans for SunModo SMR200 Rail System

Table 96b

Mean Roof Height: 15 < h ≤ 30 ft
Roof Angle: 27 < θ ≤ 45 degrees
Exposure Category: D
Panel Orientation: Portrait
North/South Support γ_E = 1.5
Roof Type : Hip

Roof Wind Zone	Ground Snow Load (psf)	Wind Speed (mph)												
		90	95	100	105	110	115	120	130	140	150	160	170	180
Zone 1	0	111	107	101	95	89	84	80	72	65	60	55	51	47
	10	107	107	101	95	89	84	80	72	65	60	55	51	47
	20	92	92	92	91	89	84	80	72	65	60	55	51	47
	30	79	79	79	79	79	79	79	72	65	60	55	51	47
	40	70	70	70	70	70	70	70	70	65	60	55	51	47
	50	64	64	64	64	64	64	64	64	64	60	55	51	47
	60	59	59	59	59	59	59	59	59	59	59	55	51	47
	70	55	55	55	55	55	55	55	55	55	55	55	51	47
	80	52	52	52	52	52	52	52	52	52	52	52	51	47
	90	49	49	49	49	49	49	49	49	49	49	49	49	47
Zone 2e	0	111	110	104	96	89	83	78	69	62	56	51	46	43
	10	107	107	104	96	89	83	78	69	62	56	51	46	43
	20	92	92	92	91	89	83	78	69	62	56	51	46	43
	30	79	79	79	79	79	79	78	69	62	56	51	46	43
	40	70	70	70	70	70	70	70	69	62	56	51	46	43
	50	64	64	64	64	64	64	64	64	62	56	51	46	43
	60	59	59	59	59	59	59	59	59	59	56	51	46	43
	70	55	55	55	55	55	55	55	55	55	55	51	46	43
	80	52	52	52	52	52	52	52	52	52	52	51	46	43
	90	49	49	49	49	49	49	49	49	49	49	49	46	43
Zone 2r	0	93	86	81	75	71	66	63	56	51	46	43	39	36
	10	93	86	81	75	71	66	63	56	51	46	43	39	36
	20	92	86	81	75	71	66	63	56	51	46	43	39	36
	30	79	79	79	75	71	66	63	56	51	46	43	39	36
	40	70	70	70	70	70	66	63	56	51	46	43	39	36
	50	64	64	64	64	64	64	63	56	51	46	43	39	36
	60	59	59	59	59	59	59	59	56	51	46	43	39	36
	70	55	55	55	55	55	55	55	55	51	46	43	39	36
	80	52	52	52	52	52	52	52	52	51	46	43	39	36
	90	49	49	49	49	49	49	49	49	49	46	43	39	36
Zone 3	0	102	93	85	79	73	68	63	56	50	45	41	38	35
	10	102	93	85	79	73	68	63	56	50	45	41	38	35
	20	92	92	85	79	73	68	63	56	50	45	41	38	35
	30	79	79	79	79	73	68	63	56	50	45	41	38	35
	40	70	70	70	70	70	68	63	56	50	45	41	38	35
	50	64	64	64	64	64	64	63	56	50	45	41	38	35
	60	59	59	59	59	59	59	59	56	50	45	41	38	35
	70	55	55	55	55	55	55	55	55	50	45	41	38	35
	80	52	52	52	52	52	52	52	52	50	45	41	38	35
	90	49	49	49	49	49	49	49	49	49	45	41	38	35

Notes:

1. Tables are based on critical rail span for load combinations as specified in chapter 2 of the ASCE 7-16 and allowable design loads per the 2015 Aluminum Design Manual.
2. Panels are assumed to be in portrait orientation with a maximum length of 82"

Structural ENGINUITY INC
Ingenuity in Engineering

SUNMODO®

Max Rail Spans for SunModo SMR200 Rail System

Table 97a

Mean Roof Height: h ≤ 15 ft
Roof Angle: 0 < θ ≤ 7 degrees
Exposure Category: B
Panel Orientation: Landscape
North/South Support Y_E = 1
Roof Type : Gable

Roof Wind Zone	Ground Snow Load (psf)	Wind Speed (mph)												
		90	95	100	105	110	115	120	130	140	150	160	170	180
Zone 1'	0	139	139	139	139	139	139	139	139	139	139	139	139	138
	10	132	132	132	132	132	132	132	132	132	132	131	130	129
	20	110	110	110	110	110	110	110	110	110	110	110	110	110
	30	109	109	109	109	109	109	109	109	109	109	109	109	109
	40	98	98	98	98	98	98	98	98	98	98	98	98	98
	50	89	89	89	89	89	89	89	89	89	89	89	89	89
	60	82	82	82	82	82	82	82	82	82	82	82	82	82
	70	76	76	76	76	76	76	76	76	76	76	76	76	76
	80	71	71	71	71	71	71	71	71	71	71	71	71	71
	90	68	68	68	68	68	68	68	68	68	68	68	68	68
Zone 1	0	139	139	139	139	139	139	139	139	134	126	119	113	108
	10	132	132	132	132	132	132	132	132	132	126	119	113	108
	20	110	110	110	110	110	110	110	110	110	110	110	110	108
	30	109	109	109	109	109	109	109	109	109	109	109	109	108
	40	98	98	98	98	98	98	98	98	98	98	98	98	98
	50	89	89	89	89	89	89	89	89	89	89	89	89	89
	60	82	82	82	82	82	82	82	82	82	82	82	82	82
	70	76	76	76	76	76	76	76	76	76	76	76	76	76
	80	71	71	71	71	71	71	71	71	71	71	71	71	71
	90	68	68	68	68	68	68	68	68	68	68	68	68	68
Zone 2	0	139	139	139	139	139	139	134	125	117	110	105	99	95
	10	132	132	132	132	132	132	132	125	117	110	105	99	95
	20	110	110	110	110	110	110	110	110	110	110	105	99	95
	30	109	109	109	109	109	109	109	109	109	109	105	99	95
	40	98	98	98	98	98	98	98	98	98	98	98	98	95
	50	89	89	89	89	89	89	89	89	89	89	89	89	89
	60	82	82	82	82	82	82	82	82	82	82	82	82	82
	70	76	76	76	76	76	76	76	76	76	76	76	76	76
	80	71	71	71	71	71	71	71	71	71	71	71	71	71
	90	68	68	68	68	68	68	68	68	68	68	68	68	68
Zone 3	0	139	139	139	132	127	122	117	109	103	97	92	85	79
	10	132	132	132	132	127	122	117	109	103	97	92	85	79
	20	110	110	110	110	110	110	110	109	103	97	92	85	79
	30	109	109	109	109	109	109	109	109	103	97	92	85	79
	40	98	98	98	98	98	98	98	98	98	97	92	85	79
	50	89	89	89	89	89	89	89	89	89	89	89	85	79
	60	82	82	82	82	82	82	82	82	82	82	82	82	79
	70	76	76	76	76	76	76	76	76	76	76	76	76	76
	80	71	71	71	71	71	71	71	71	71	71	71	71	71
	90	68	68	68	68	68	68	68	68	68	68	68	68	68

Notes:

1. Tables are based on critical rail span for load combinations as specified in chapter 2 of the ASCE 7-16 and allowable design loads per the 2015 Aluminum Design Manual.
2. Panels are assumed to be in landscape orientation with a maximum width of 42"

Structural ENGINUITY INC
Ingenuity in Engineering

SUNMODO®

Max Rail Spans for SunModo SMR200 Rail System

Table 97b

Mean Roof Height: h ≤ 15 ft
Roof Angle: 0 < θ ≤ 7 degrees
Exposure Category: B
Panel Orientation: Landscape
North/South Support γ_E = 1.5
Roof Type : Gable

Roof Wind Zone	Ground Snow Load (psf)	Wind Speed (mph)												
		90	95	100	105	110	115	120	130	140	150	160	170	180
Zone 1'	0	139	139	139	139	139	139	139	139	139	135	128	121	116
	10	132	132	132	132	132	132	132	132	132	132	128	121	116
	20	110	110	110	110	110	110	110	110	110	110	110	110	110
	30	109	109	109	109	109	109	109	109	109	109	109	109	109
	40	98	98	98	98	98	98	98	98	98	98	98	98	98
	50	89	89	89	89	89	89	89	89	89	89	89	89	89
	60	82	82	82	82	82	82	82	82	82	82	82	82	82
	70	76	76	76	76	76	76	76	76	76	76	76	76	76
	80	71	71	71	71	71	71	71	71	71	71	71	71	71
	90	68	68	68	68	68	68	68	68	68	68	68	68	68
Zone 1	0	139	139	139	139	139	133	128	119	112	106	100	95	90
	10	132	132	132	132	132	132	128	119	112	106	100	95	90
	20	110	110	110	110	110	110	110	110	110	106	100	95	90
	30	109	109	109	109	109	109	109	109	109	106	100	95	90
	40	98	98	98	98	98	98	98	98	98	98	98	95	90
	50	89	89	89	89	89	89	89	89	89	89	89	89	89
	60	82	82	82	82	82	82	82	82	82	82	82	82	82
	70	76	76	76	76	76	76	76	76	76	76	76	76	76
	80	71	71	71	71	71	71	71	71	71	71	71	71	71
	90	68	68	68	68	68	68	68	68	68	68	68	68	68
Zone 2	0	139	138	132	126	121	116	112	105	99	93	87	80	75
	10	132	132	132	126	121	116	112	105	99	93	87	80	75
	20	110	110	110	110	110	110	110	105	99	93	87	80	75
	30	109	109	109	109	109	109	109	105	99	93	87	80	75
	40	98	98	98	98	98	98	98	98	98	93	87	80	75
	50	89	89	89	89	89	89	89	89	89	89	87	80	75
	60	82	82	82	82	82	82	82	82	82	82	82	80	75
	70	76	76	76	76	76	76	76	76	76	76	76	76	75
	80	71	71	71	71	71	71	71	71	71	71	71	71	71
	90	68	68	68	68	68	68	68	68	68	68	68	68	68
Zone 3	0	126	120	115	110	106	102	99	92	84	76	70	66	62
	10	126	120	115	110	106	102	99	92	84	76	70	66	62
	20	110	110	110	110	106	102	99	92	84	76	70	66	62
	30	109	109	109	109	106	102	99	92	84	76	70	66	62
	40	98	98	98	98	98	98	98	92	84	76	70	66	62
	50	89	89	89	89	89	89	89	89	84	76	70	66	62
	60	82	82	82	82	82	82	82	82	82	76	70	66	62
	70	76	76	76	76	76	76	76	76	76	76	70	66	62
	80	71	71	71	71	71	71	71	71	71	71	70	66	62
	90	68	68	68	68	68	68	68	68	68	68	68	66	62

Notes:

1. Tables are based on critical rail span for load combinations as specified in chapter 2 of the ASCE 7-16 and allowable design loads per the 2015 Aluminum Design Manual.
2. Panels are assumed to be in landscape orientation with a maximum width of 42"

Structural ENGINUITY INC
Ingenuity in Engineering

SUNMODO®

Max Rail Spans for SunModo SMR200 Rail System

Table 98a

Mean Roof Height: h ≤ 15 ft
Roof Angle: 0 < θ ≤ 7 degrees
Exposure Category: C
Panel Orientation: Landscape
North/South Support Y_E = 1
Roof Type : Gable

Roof Wind Zone	Ground Snow Load (psf)	Wind Speed (mph)												
		90	95	100	105	110	115	120	130	140	150	160	170	180
Zone 1'	0	139	139	139	139	139	139	139	139	139	136	128	122	116
	10	132	132	132	132	132	132	132	132	130	129	127	122	116
	20	110	110	110	110	110	110	110	110	110	110	110	110	110
	30	109	109	109	109	109	109	109	109	109	109	109	109	108
	40	98	98	98	98	98	98	98	98	98	98	98	98	98
	50	89	89	89	89	89	89	89	89	89	89	89	89	89
	60	82	82	82	82	82	82	82	82	82	82	82	82	82
	70	76	76	76	76	76	76	76	76	76	76	76	76	76
	80	71	71	71	71	71	71	71	71	71	71	71	71	71
	90	68	68	68	68	68	68	68	68	68	68	68	68	68
Zone 1	0	139	139	139	139	139	134	129	120	112	106	101	96	91
	10	132	132	132	132	132	132	129	120	112	106	101	96	91
	20	110	110	110	110	110	110	110	110	110	106	101	96	91
	30	109	109	109	109	109	109	109	109	109	106	101	96	91
	40	98	98	98	98	98	98	98	98	98	98	98	96	91
	50	89	89	89	89	89	89	89	89	89	89	89	89	89
	60	82	82	82	82	82	82	82	82	82	82	82	82	82
	70	76	76	76	76	76	76	76	76	76	76	76	76	76
	80	71	71	71	71	71	71	71	71	71	71	71	71	71
	90	68	68	68	68	68	68	68	68	68	68	68	68	68
Zone 2	0	139	138	132	126	121	117	113	105	99	94	87	80	75
	10	132	132	132	126	121	117	113	105	99	94	87	80	75
	20	110	110	110	110	110	110	110	105	99	94	87	80	75
	30	109	109	109	109	109	109	109	105	99	94	87	80	75
	40	98	98	98	98	98	98	98	98	98	94	87	80	75
	50	89	89	89	89	89	89	89	89	89	89	87	80	75
	60	82	82	82	82	82	82	82	82	82	82	82	80	75
	70	76	76	76	76	76	76	76	76	76	76	76	76	75
	80	71	71	71	71	71	71	71	71	71	71	71	71	71
	90	68	68	68	68	68	68	68	68	68	68	68	68	68
Zone 3	0	127	121	115	111	106	102	99	92	84	77	71	66	62
	10	127	121	115	111	106	102	99	92	84	77	71	66	62
	20	110	110	110	110	106	102	99	92	84	77	71	66	62
	30	109	109	109	109	106	102	99	92	84	77	71	66	62
	40	98	98	98	98	98	98	98	92	84	77	71	66	62
	50	89	89	89	89	89	89	89	89	84	77	71	66	62
	60	82	82	82	82	82	82	82	82	82	77	71	66	62
	70	76	76	76	76	76	76	76	76	76	76	71	66	62
	80	71	71	71	71	71	71	71	71	71	71	71	66	62
	90	68	68	68	68	68	68	68	68	68	68	68	66	62

Notes:

1. Tables are based on critical rail span for load combinations as specified in chapter 2 of the ASCE 7-16 and allowable design loads per the 2015 Aluminum Design Manual.
2. Panels are assumed to be in landscape orientation with a maximum width of 42"

Structural ENGINUITY INC
Ingenuity in Engineering

SUNMODO®

Max Rail Spans for SunModo SMR200 Rail System

Table 98b

Mean Roof Height: h ≤ 15 ft
Roof Angle: 0 < θ ≤ 7 degrees
Exposure Category: C
Panel Orientation: Landscape
North/South Support γ_E = 1.5
Roof Type : Gable

Roof Wind Zone	Ground Snow Load (psf)	Wind Speed (mph)												
		90	95	100	105	110	115	120	130	140	150	160	170	180
Zone 1'	0	139	139	139	139	139	139	138	129	121	114	108	103	99
	10	132	132	132	132	132	132	132	129	121	114	108	103	99
	20	110	110	110	110	110	110	110	110	110	110	108	103	99
	30	109	109	109	109	109	109	109	109	109	109	108	103	99
	40	98	98	98	98	98	98	98	98	98	98	98	98	98
	50	89	89	89	89	89	89	89	89	89	89	89	89	89
	60	82	82	82	82	82	82	82	82	82	82	82	82	82
	70	76	76	76	76	76	76	76	76	76	76	76	76	76
	80	71	71	71	71	71	71	71	71	71	71	71	71	71
	90	68	68	68	68	68	68	68	68	68	68	68	68	68
Zone 1	0	139	132	126	121	116	112	108	101	95	88	81	75	70
	10	132	132	126	121	116	112	108	101	95	88	81	75	70
	20	110	110	110	110	110	110	108	101	95	88	81	75	70
	30	109	109	109	109	109	109	108	101	95	88	81	75	70
	40	98	98	98	98	98	98	98	98	95	88	81	75	70
	50	89	89	89	89	89	89	89	89	89	88	81	75	70
	60	82	82	82	82	82	82	82	82	82	82	81	75	70
	70	76	76	76	76	76	76	76	76	76	76	76	75	70
	80	71	71	71	71	71	71	71	71	71	71	71	71	70
	90	68	68	68	68	68	68	68	68	68	68	68	68	68
Zone 2	0	121	116	111	106	102	99	95	87	80	73	68	63	60
	10	121	116	111	106	102	99	95	87	80	73	68	63	60
	20	110	110	110	106	102	99	95	87	80	73	68	63	60
	30	109	109	109	106	102	99	95	87	80	73	68	63	60
	40	98	98	98	98	98	98	95	87	80	73	68	63	60
	50	89	89	89	89	89	89	89	87	80	73	68	63	60
	60	82	82	82	82	82	82	82	82	80	73	68	63	60
	70	76	76	76	76	76	76	76	76	76	73	68	63	60
	80	71	71	71	71	71	71	71	71	71	71	68	63	60
	90	68	68	68	68	68	68	68	68	68	68	68	63	60
Zone 3	0	106	101	97	93	88	83	79	71	65	61	57	54	50
	10	106	101	97	93	88	83	79	71	65	61	57	54	50
	20	106	101	97	93	88	83	79	71	65	61	57	54	50
	30	106	101	97	93	88	83	79	71	65	61	57	54	50
	40	98	98	97	93	88	83	79	71	65	61	57	54	50
	50	89	89	89	89	88	83	79	71	65	61	57	54	50
	60	82	82	82	82	82	82	79	71	65	61	57	54	50
	70	76	76	76	76	76	76	76	71	65	61	57	54	50
	80	71	71	71	71	71	71	71	71	65	61	57	54	50
	90	68	68	68	68	68	68	68	68	65	61	57	54	50

Notes:

1. Tables are based on critical rail span for load combinations as specified in chapter 2 of the ASCE 7-16 and allowable design loads per the 2015 Aluminum Design Manual.
2. Panels are assumed to be in landscape orientation with a maximum width of 42"

Structural ENGINUITY INC
Ingenuity in Engineering

SUNMODO®

Max Rail Spans for SunModo SMR200 Rail System

Table 99a

Mean Roof Height: h ≤ 15 ft
Roof Angle: 0 < θ ≤ 7 degrees
Exposure Category: D
Panel Orientation: Landscape
North/South Support Y_E = 1
Roof Type : Gable

Roof Wind Zone	Ground Snow Load (psf)	Wind Speed (mph)												
		90	95	100	105	110	115	120	130	140	150	160	170	180
Zone 1'	0	139	139	139	139	139	139	139	139	132	125	118	112	107
	10	132	132	132	132	132	132	131	130	128	125	118	112	107
	20	110	110	110	110	110	110	110	110	110	110	110	109	107
	30	109	109	109	109	109	109	109	109	109	109	109	108	107
	40	98	98	98	98	98	98	98	98	98	98	98	98	98
	50	89	89	89	89	89	89	89	89	89	89	89	89	89
	60	82	82	82	82	82	82	82	82	82	82	82	82	82
	70	76	76	76	76	76	76	76	76	76	76	76	76	76
	80	71	71	71	71	71	71	71	71	71	71	71	71	71
	90	68	68	68	68	68	68	68	68	68	68	68	68	68
Zone 1	0	139	139	139	133	128	123	118	110	104	98	93	86	80
	10	132	132	132	132	128	123	118	110	104	98	93	86	80
	20	110	110	110	110	110	110	110	110	104	98	93	86	80
	30	109	109	109	109	109	109	109	109	104	98	93	86	80
	40	98	98	98	98	98	98	98	98	98	98	93	86	80
	50	89	89	89	89	89	89	89	89	89	89	89	86	80
	60	82	82	82	82	82	82	82	82	82	82	82	82	80
	70	76	76	76	76	76	76	76	76	76	76	76	76	76
	80	71	71	71	71	71	71	71	71	71	71	71	71	71
	90	68	68	68	68	68	68	68	68	68	68	68	68	68
Zone 2	0	133	127	121	116	112	108	104	97	91	83	77	71	67
	10	132	127	121	116	112	108	104	97	91	83	77	71	67
	20	110	110	110	110	110	108	104	97	91	83	77	71	67
	30	109	109	109	109	109	108	104	97	91	83	77	71	67
	40	98	98	98	98	98	98	98	97	91	83	77	71	67
	50	89	89	89	89	89	89	89	89	89	83	77	71	67
	60	82	82	82	82	82	82	82	82	82	82	77	71	67
	70	76	76	76	76	76	76	76	76	76	76	76	71	67
	80	71	71	71	71	71	71	71	71	71	71	71	71	67
	90	68	68	68	68	68	68	68	68	68	68	68	68	67
Zone 3	0	116	111	106	102	98	95	91	82	74	68	64	60	56
	10	116	111	106	102	98	95	91	82	74	68	64	60	56
	20	110	110	106	102	98	95	91	82	74	68	64	60	56
	30	109	109	106	102	98	95	91	82	74	68	64	60	56
	40	98	98	98	98	98	95	91	82	74	68	64	60	56
	50	89	89	89	89	89	89	89	82	74	68	64	60	56
	60	82	82	82	82	82	82	82	82	74	68	64	60	56
	70	76	76	76	76	76	76	76	76	74	68	64	60	56
	80	71	71	71	71	71	71	71	71	71	68	64	60	56
	90	68	68	68	68	68	68	68	68	68	68	64	60	56

Notes:

1. Tables are based on critical rail span for load combinations as specified in chapter 2 of the ASCE 7-16 and allowable design loads per the 2015 Aluminum Design Manual.
2. Panels are assumed to be in landscape orientation with a maximum width of 42"

Structural ENGINUITY INC
Ingenuity in Engineering

SUNMODO®

Max Rail Spans for SunModo SMR200 Rail System

Table 99b

Mean Roof Height: h ≤ 15 ft
Roof Angle: 0 < θ ≤ 7 degrees
Exposure Category: D
Panel Orientation: Landscape
North/South Support γ_E = 1.5
Roof Type : Gable

Roof Wind Zone	Ground Snow Load (psf)	Wind Speed (mph)												
		90	95	100	105	110	115	120	130	140	150	160	170	180
Zone 1'	0	139	139	139	139	137	132	127	119	112	106	100	96	91
	10	132	132	132	132	132	132	127	119	112	106	100	96	91
	20	110	110	110	110	110	110	110	110	110	106	100	96	91
	30	109	109	109	109	109	109	109	109	109	106	100	96	91
	40	98	98	98	98	98	98	98	98	98	98	98	96	91
	50	89	89	89	89	89	89	89	89	89	89	89	89	89
	60	82	82	82	82	82	82	82	82	82	82	82	82	82
	70	76	76	76	76	76	76	76	76	76	76	76	76	76
	80	71	71	71	71	71	71	71	71	71	71	71	71	71
	90	68	68	68	68	68	68	68	68	68	68	68	68	68
Zone 1	0	127	121	116	111	107	103	100	93	85	78	72	67	63
	10	127	121	116	111	107	103	100	93	85	78	72	67	63
	20	110	110	110	110	107	103	100	93	85	78	72	67	63
	30	109	109	109	109	107	103	100	93	85	78	72	67	63
	40	98	98	98	98	98	98	98	93	85	78	72	67	63
	50	89	89	89	89	89	89	89	89	85	78	72	67	63
	60	82	82	82	82	82	82	82	82	82	78	72	67	63
	70	76	76	76	76	76	76	76	76	76	76	72	67	63
	80	71	71	71	71	71	71	71	71	71	71	71	67	63
	90	68	68	68	68	68	68	68	68	68	68	68	67	63
Zone 2	0	111	107	102	98	94	90	86	77	71	65	61	57	54
	10	111	107	102	98	94	90	86	77	71	65	61	57	54
	20	110	107	102	98	94	90	86	77	71	65	61	57	54
	30	109	107	102	98	94	90	86	77	71	65	61	57	54
	40	98	98	98	98	94	90	86	77	71	65	61	57	54
	50	89	89	89	89	89	89	86	77	71	65	61	57	54
	60	82	82	82	82	82	82	82	77	71	65	61	57	54
	70	76	76	76	76	76	76	76	76	71	65	61	57	54
	80	71	71	71	71	71	71	71	71	71	65	61	57	54
	90	68	68	68	68	68	68	68	68	68	65	61	57	54
Zone 3	0	98	94	88	83	78	74	70	64	59	55	52	48	46
	10	98	94	88	83	78	74	70	64	59	55	52	48	46
	20	98	94	88	83	78	74	70	64	59	55	52	48	46
	30	98	94	88	83	78	74	70	64	59	55	52	48	46
	40	98	94	88	83	78	74	70	64	59	55	52	48	46
	50	89	89	88	83	78	74	70	64	59	55	52	48	46
	60	82	82	82	82	78	74	70	64	59	55	52	48	46
	70	76	76	76	76	76	74	70	64	59	55	52	48	46
	80	71	71	71	71	71	71	70	64	59	55	52	48	46
	90	68	68	68	68	68	68	68	64	59	55	52	48	46

Notes:

1. Tables are based on critical rail span for load combinations as specified in chapter 2 of the ASCE 7-16 and allowable design loads per the 2015 Aluminum Design Manual.
2. Panels are assumed to be in landscape orientation with a maximum width of 42"

Structural ENGINUITY INC
Ingenuity in Engineering

SUNMODO®

Max Rail Spans for SunModo SMR200 Rail System

Table 100a

Mean Roof Height: h ≤ 15 ft
Roof Angle: 7 < θ ≤ 20 degrees
Exposure Category: B
Panel Orientation: Landscape
North/South Support $\gamma_E = 1$
Roof Type : Gable

Roof Wind Zone	Ground Snow Load (psf)	Wind Speed (mph)												
		90	95	100	105	110	115	120	130	140	150	160	170	180
Zones 1 & 2e	0	139	139	139	139	139	139	138	129	121	114	108	103	99
	10	132	132	132	132	132	132	132	129	121	114	108	103	99
	20	104	104	104	104	104	104	104	104	104	104	104	103	99
	30	104	104	104	104	104	104	104	104	104	104	104	103	99
	40	92	92	92	92	92	92	92	92	92	92	92	92	92
	50	83	83	83	83	83	83	83	83	83	83	83	83	83
	60	77	77	77	77	77	77	77	77	77	77	77	77	77
	70	72	72	72	72	72	72	72	72	72	72	72	72	72
	80	67	67	67	67	67	67	67	67	67	67	67	67	67
	90	64	64	64	64	64	64	64	64	64	64	64	64	64
Zones 2n, 2r, & 3e	0	139	139	139	139	133	127	123	114	107	100	95	88	82
	10	132	132	132	132	132	127	123	114	107	100	95	88	82
	20	104	104	104	104	104	104	104	104	104	100	95	88	82
	30	104	104	104	104	104	104	104	104	104	100	95	88	82
	40	92	92	92	92	92	92	92	92	92	92	92	88	82
	50	83	83	83	83	83	83	83	83	83	83	83	83	82
	60	77	77	77	77	77	77	77	77	77	77	77	77	77
	70	72	72	72	72	72	72	72	72	72	72	72	72	72
	80	67	67	67	67	67	67	67	67	67	67	67	67	67
	90	64	64	64	64	64	64	64	64	64	64	64	64	64
Zone 3r	0	139	139	134	128	122	117	113	105	99	93	85	78	72
	10	132	132	132	128	122	117	113	105	99	93	85	78	72
	20	104	104	104	104	104	104	104	104	99	93	85	78	72
	30	104	104	104	104	104	104	104	104	99	93	85	78	72
	40	92	92	92	92	92	92	92	92	92	92	85	78	72
	50	83	83	83	83	83	83	83	83	83	83	83	78	72
	60	77	77	77	77	77	77	77	77	77	77	77	77	72
	70	72	72	72	72	72	72	72	72	72	72	72	72	72
	80	67	67	67	67	67	67	67	67	67	67	67	67	67
	90	64	64	64	64	64	64	64	64	64	64	64	64	64

Notes:

1. Tables are based on critical rail span for load combinations as specified in chapter 2 of the ASCE 7-16 and allowable design loads per the 2015 Aluminum Design Manual.
2. Panels are assumed to be in landscape orientation with a maximum width of 42"

Structural ENGINUITY INC
Ingenuity in Engineering

SUNMODO®

Max Rail Spans for SunModo SMR200 Rail System

Table 100b

Mean Roof Height: h ≤ 15 ft
Roof Angle: 7 < θ ≤ 20 degrees
Exposure Category: B
Panel Orientation: Landscape
North/South Support γ_E = 1.5
Roof Type : Gable

Roof Wind Zone	Ground Snow Load (psf)	Wind Speed (mph)												
		90	95	100	105	110	115	120	130	140	150	160	170	180
Zones 1 & 2e	0	139	139	135	130	125	120	116	109	103	97	92	85	80
	10	132	132	132	130	125	120	116	109	103	97	92	85	80
	20	104	104	104	104	104	104	104	104	103	97	92	85	80
	30	104	104	104	104	104	104	104	104	103	97	92	85	80
	40	92	92	92	92	92	92	92	92	92	92	92	85	80
	50	83	83	83	83	83	83	83	83	83	83	83	83	80
	60	77	77	77	77	77	77	77	77	77	77	77	77	77
	70	72	72	72	72	72	72	72	72	72	72	72	72	72
	80	67	67	67	67	67	67	67	67	67	67	67	67	67
	90	64	64	64	64	64	64	64	64	64	64	64	64	64
Zones 2n, 2r, & 3e	0	133	126	120	115	110	106	102	95	87	80	73	68	64
	10	132	126	120	115	110	106	102	95	87	80	73	68	64
	20	104	104	104	104	104	104	102	95	87	80	73	68	64
	30	104	104	104	104	104	104	102	95	87	80	73	68	64
	40	92	92	92	92	92	92	92	92	87	80	73	68	64
	50	83	83	83	83	83	83	83	83	83	80	73	68	64
	60	77	77	77	77	77	77	77	77	77	77	73	68	64
	70	72	72	72	72	72	72	72	72	72	72	72	68	64
	80	67	67	67	67	67	67	67	67	67	67	67	67	64
	90	64	64	64	64	64	64	64	64	64	64	64	64	64
Zone 3r	0	122	116	111	106	102	98	95	85	77	71	66	62	58
	10	122	116	111	106	102	98	95	85	77	71	66	62	58
	20	104	104	104	104	102	98	95	85	77	71	66	62	58
	30	104	104	104	104	102	98	95	85	77	71	66	62	58
	40	92	92	92	92	92	92	92	85	77	71	66	62	58
	50	83	83	83	83	83	83	83	83	77	71	66	62	58
	60	77	77	77	77	77	77	77	77	77	71	66	62	58
	70	72	72	72	72	72	72	72	72	72	71	66	62	58
	80	67	67	67	67	67	67	67	67	67	67	66	62	58
	90	64	64	64	64	64	64	64	64	64	64	64	62	58

Notes:

1. Tables are based on critical rail span for load combinations as specified in chapter 2 of the ASCE 7-16 and allowable design loads per the 2015 Aluminum Design Manual.
2. Panels are assumed to be in landscape orientation with a maximum width of 42"

Structural ENGINUITY INC
Ingenuity in Engineering

SUNMODO®

Max Rail Spans for SunModo SMR200 Rail System

Table 101a

Mean Roof Height: h ≤ 15 ft
Roof Angle: 7 < θ ≤ 20 degrees
Exposure Category: C
Panel Orientation: Landscape
North/South Support $Y_E = 1$
Roof Type : Gable

Roof Wind Zone	Ground Snow Load (psf)	Wind Speed (mph)												
		90	95	100	105	110	115	120	130	140	150	160	170	180
Zones 1 & 2e	0	139	139	136	130	125	121	116	109	103	97	92	86	80
	10	132	132	132	130	125	121	116	109	103	97	92	86	80
	20	104	104	104	104	104	104	104	104	103	97	92	86	80
	30	104	104	104	104	104	104	104	104	103	97	92	86	80
	40	92	92	92	92	92	92	92	92	92	92	92	86	80
	50	83	83	83	83	83	83	83	83	83	83	83	83	80
	60	77	77	77	77	77	77	77	77	77	77	77	77	77
	70	72	72	72	72	72	72	72	72	72	72	72	72	72
	80	67	67	67	67	67	67	67	67	67	67	67	67	67
	90	64	64	64	64	64	64	64	64	64	64	64	64	64
Zones 2n, 2r, & 3e	0	133	126	121	115	111	106	103	96	88	80	73	68	64
	10	132	126	121	115	111	106	103	96	88	80	73	68	64
	20	104	104	104	104	104	104	103	96	88	80	73	68	64
	30	104	104	104	104	104	104	103	96	88	80	73	68	64
	40	92	92	92	92	92	92	92	92	88	80	73	68	64
	50	83	83	83	83	83	83	83	83	83	80	73	68	64
	60	77	77	77	77	77	77	77	77	77	77	73	68	64
	70	72	72	72	72	72	72	72	72	72	72	72	68	64
	80	67	67	67	67	67	67	67	67	67	67	67	67	64
	90	64	64	64	64	64	64	64	64	64	64	64	64	64
Zone 3r	0	123	117	111	107	102	98	95	86	78	71	66	62	58
	10	123	117	111	107	102	98	95	86	78	71	66	62	58
	20	104	104	104	104	102	98	95	86	78	71	66	62	58
	30	104	104	104	104	102	98	95	86	78	71	66	62	58
	40	92	92	92	92	92	92	92	86	78	71	66	62	58
	50	83	83	83	83	83	83	83	83	78	71	66	62	58
	60	77	77	77	77	77	77	77	77	77	71	66	62	58
	70	72	72	72	72	72	72	72	72	72	71	66	62	58
	80	67	67	67	67	67	67	67	67	67	67	66	62	58
	90	64	64	64	64	64	64	64	64	64	64	64	62	58

Notes:

1. Tables are based on critical rail span for load combinations as specified in chapter 2 of the ASCE 7-16 and allowable design loads per the 2015 Aluminum Design Manual.
2. Panels are assumed to be in landscape orientation with a maximum width of 42"

Structural ENGINUITY INC
Ingenuity in Engineering

SUNMODO®

Max Rail Spans for SunModo SMR200 Rail System

Table 101b

Mean Roof Height: h ≤ 15 ft
Roof Angle: 7 < θ ≤ 20 degrees
Exposure Category: C
Panel Orientation: Landscape
North/South Support γ_E = 1.5
Roof Type : Gable

Roof Wind Zone	Ground Snow Load (psf)	Wind Speed (mph)												
		90	95	100	105	110	115	120	130	140	150	160	170	180
Zones 1 & 2e	0	125	119	115	110	106	102	99	93	85	78	73	68	64
	10	125	119	115	110	106	102	99	93	85	78	73	68	64
	20	104	104	104	104	104	102	99	93	85	78	73	68	64
	30	104	104	104	104	104	102	99	93	85	78	73	68	64
	40	92	92	92	92	92	92	92	92	85	78	73	68	64
	50	83	83	83	83	83	83	83	83	83	78	73	68	64
	60	77	77	77	77	77	77	77	77	77	77	73	68	64
	70	72	72	72	72	72	72	72	72	72	72	72	68	64
	80	67	67	67	67	67	67	67	67	67	67	67	67	64
	90	64	64	64	64	64	64	64	64	64	64	64	64	64
Zones 2n, 2r, & 3e	0	110	105	101	97	92	87	82	74	67	63	59	55	52
	10	110	105	101	97	92	87	82	74	67	63	59	55	52
	20	104	104	101	97	92	87	82	74	67	63	59	55	52
	30	104	104	101	97	92	87	82	74	67	63	59	55	52
	40	92	92	92	92	92	87	82	74	67	63	59	55	52
	50	83	83	83	83	83	83	82	74	67	63	59	55	52
	60	77	77	77	77	77	77	77	74	67	63	59	55	52
	70	72	72	72	72	72	72	72	72	67	63	59	55	52
	80	67	67	67	67	67	67	67	67	67	63	59	55	52
	90	64	64	64	64	64	64	64	64	64	63	59	55	52
Zone 3r	0	102	98	93	87	82	77	73	66	61	57	53	50	47
	10	102	98	93	87	82	77	73	66	61	57	53	50	47
	20	102	98	93	87	82	77	73	66	61	57	53	50	47
	30	102	98	93	87	82	77	73	66	61	57	53	50	47
	40	92	92	92	87	82	77	73	66	61	57	53	50	47
	50	83	83	83	83	82	77	73	66	61	57	53	50	47
	60	77	77	77	77	77	77	73	66	61	57	53	50	47
	70	72	72	72	72	72	72	72	66	61	57	53	50	47
	80	67	67	67	67	67	67	67	66	61	57	53	50	47
	90	64	64	64	64	64	64	64	64	61	57	53	50	47

Notes:

1. Tables are based on critical rail span for load combinations as specified in chapter 2 of the ASCE 7-16 and allowable design loads per the 2015 Aluminum Design Manual.
2. Panels are assumed to be in landscape orientation with a maximum width of 42"

Structural ENGINUITY INC
Ingenuity in Engineering

SUNMODO®

Max Rail Spans for SunModo SMR200 Rail System

Table 102a

Mean Roof Height: h ≤ 15 ft
Roof Angle: 7 < θ ≤ 20 degrees
Exposure Category: D
Panel Orientation: Landscape
North/South Support $Y_E = 1$
Roof Type : Gable

Roof Wind Zone	Ground Snow Load (psf)	Wind Speed (mph)												
		90	95	100	105	110	115	120	130	140	150	160	170	180
Zones 1 & 2e	0	137	131	125	120	116	111	108	101	95	89	82	77	72
	10	132	131	125	120	116	111	108	101	95	89	82	77	72
	20	104	104	104	104	104	104	104	101	95	89	82	77	72
	30	104	104	104	104	104	104	104	101	95	89	82	77	72
	40	92	92	92	92	92	92	92	92	92	89	82	77	72
	50	83	83	83	83	83	83	83	83	83	83	82	77	72
	60	77	77	77	77	77	77	77	77	77	77	77	77	72
	70	72	72	72	72	72	72	72	72	72	72	72	72	72
	80	67	67	67	67	67	67	67	67	67	67	67	67	67
	90	64	64	64	64	64	64	64	64	64	64	64	64	64
Zones 2n, 2r, & 3e	0	122	116	111	106	102	98	94	85	77	70	65	61	58
	10	122	116	111	106	102	98	94	85	77	70	65	61	58
	20	104	104	104	104	102	98	94	85	77	70	65	61	58
	30	104	104	104	104	102	98	94	85	77	70	65	61	58
	40	92	92	92	92	92	92	92	85	77	70	65	61	58
	50	83	83	83	83	83	83	83	83	77	70	65	61	58
	60	77	77	77	77	77	77	77	77	77	70	65	61	58
	70	72	72	72	72	72	72	72	72	72	70	65	61	58
	80	67	67	67	67	67	67	67	67	67	67	65	61	58
	90	64	64	64	64	64	64	64	64	64	64	64	61	58
Zone 3r	0	112	107	102	98	94	89	84	75	68	64	60	56	53
	10	112	107	102	98	94	89	84	75	68	64	60	56	53
	20	104	104	102	98	94	89	84	75	68	64	60	56	53
	30	104	104	102	98	94	89	84	75	68	64	60	56	53
	40	92	92	92	92	92	89	84	75	68	64	60	56	53
	50	83	83	83	83	83	83	83	75	68	64	60	56	53
	60	77	77	77	77	77	77	77	75	68	64	60	56	53
	70	72	72	72	72	72	72	72	72	68	64	60	56	53
	80	67	67	67	67	67	67	67	67	67	64	60	56	53
	90	64	64	64	64	64	64	64	64	64	64	60	56	53

Notes:

1. Tables are based on critical rail span for load combinations as specified in chapter 2 of the ASCE 7-16 and allowable design loads per the 2015 Aluminum Design Manual.
2. Panels are assumed to be in landscape orientation with a maximum width of 42"

Structural ENGINUITY INC
Ingenuity in Engineering

SUNMODO®

Max Rail Spans for SunModo SMR200 Rail System

Table 102b

Mean Roof Height: h ≤ 15 ft
Roof Angle: 7 < θ ≤ 20 degrees
Exposure Category: D
Panel Orientation: Landscape
North/South Support γ_E = 1.5
Roof Type : Gable

Roof Wind Zone	Ground Snow Load (psf)	Wind Speed (mph)												
		90	95	100	105	110	115	120	130	140	150	160	170	180
Zones 1 & 2e	0	115	110	106	102	98	95	91	83	76	70	65	61	58
	10	115	110	106	102	98	95	91	83	76	70	65	61	58
	20	104	104	104	102	98	95	91	83	76	70	65	61	58
	30	104	104	104	102	98	95	91	83	76	70	65	61	58
	40	92	92	92	92	92	92	91	83	76	70	65	61	58
	50	83	83	83	83	83	83	83	83	76	70	65	61	58
	60	77	77	77	77	77	77	77	77	76	70	65	61	58
	70	72	72	72	72	72	72	72	72	72	70	65	61	58
	80	67	67	67	67	67	67	67	67	67	67	65	61	58
	90	64	64	64	64	64	64	64	64	64	64	64	61	58
Zones 2n, 2r, & 3e	0	102	97	92	86	81	76	72	66	61	57	53	50	47
	10	102	97	92	86	81	76	72	66	61	57	53	50	47
	20	102	97	92	86	81	76	72	66	61	57	53	50	47
	30	102	97	92	86	81	76	72	66	61	57	53	50	47
	40	92	92	92	86	81	76	72	66	61	57	53	50	47
	50	83	83	83	83	81	76	72	66	61	57	53	50	47
	60	77	77	77	77	77	76	72	66	61	57	53	50	47
	70	72	72	72	72	72	72	72	66	61	57	53	50	47
	80	67	67	67	67	67	67	67	66	61	57	53	50	47
	90	64	64	64	64	64	64	64	64	61	57	53	50	47
Zone 3r	0	94	87	82	76	72	68	65	60	56	52	48	46	43
	10	94	87	82	76	72	68	65	60	56	52	48	46	43
	20	94	87	82	76	72	68	65	60	56	52	48	46	43
	30	94	87	82	76	72	68	65	60	56	52	48	46	43
	40	92	87	82	76	72	68	65	60	56	52	48	46	43
	50	83	83	82	76	72	68	65	60	56	52	48	46	43
	60	77	77	77	76	72	68	65	60	56	52	48	46	43
	70	72	72	72	72	72	68	65	60	56	52	48	46	43
	80	67	67	67	67	67	67	65	60	56	52	48	46	43
	90	64	64	64	64	64	64	64	60	56	52	48	46	43

Notes:

1. Tables are based on critical rail span for load combinations as specified in chapter 2 of the ASCE 7-16 and allowable design loads per the 2015 Aluminum Design Manual.
2. Panels are assumed to be in landscape orientation with a maximum width of 42"

Structural ENGINUITY INC
Ingenuity in Engineering

SUNMODO®

Max Rail Spans for SunModo SMR200 Rail System

Table 103a

Mean Roof Height: h ≤ 15 ft
Roof Angle: 20 < θ ≤ 27 degrees
Exposure Category: B
Panel Orientation: Landscape
North/South Support $Y_E = 1$
Roof Type : Gable

Roof Wind Zone	Ground Snow Load (psf)	Wind Speed (mph)												
		90	95	100	105	110	115	120	130	140	150	160	170	180
Zones 1 & 2e	0	139	139	139	139	139	139	139	139	136	128	122	116	111
	10	139	139	139	139	139	139	139	139	136	128	122	116	111
	20	123	123	123	123	123	123	123	123	123	123	122	116	111
	30	105	105	105	105	105	105	105	105	105	105	105	105	105
	40	93	93	93	93	93	93	93	93	93	93	93	93	93
	50	84	84	84	84	84	84	84	84	84	84	84	84	84
	60	78	78	78	78	78	78	78	78	78	78	78	78	78
	70	72	72	72	72	72	72	72	72	72	72	72	72	72
	80	68	68	68	68	68	68	68	68	68	68	68	68	68
	90	64	64	64	64	64	64	64	64	64	64	64	64	64
Zones 2n, 2r, & 3e	0	139	139	139	139	139	138	132	123	115	108	102	97	91
	10	139	139	139	139	139	138	132	123	115	108	102	97	91
	20	123	123	123	123	123	123	123	123	115	108	102	97	91
	30	105	105	105	105	105	105	105	105	105	105	102	97	91
	40	93	93	93	93	93	93	93	93	93	93	93	93	91
	50	84	84	84	84	84	84	84	84	84	84	84	84	84
	60	78	78	78	78	78	78	78	78	78	78	78	78	78
	70	72	72	72	72	72	72	72	72	72	72	72	72	72
	80	68	68	68	68	68	68	68	68	68	68	68	68	68
	90	64	64	64	64	64	64	64	64	64	64	64	64	64
Zone 3r	0	139	139	139	139	135	130	125	116	108	102	96	89	83
	10	139	139	139	139	135	130	125	116	108	102	96	89	83
	20	123	123	123	123	123	123	123	116	108	102	96	89	83
	30	105	105	105	105	105	105	105	105	105	102	96	89	83
	40	93	93	93	93	93	93	93	93	93	93	93	89	83
	50	84	84	84	84	84	84	84	84	84	84	84	84	83
	60	78	78	78	78	78	78	78	78	78	78	78	78	78
	70	72	72	72	72	72	72	72	72	72	72	72	72	72
	80	68	68	68	68	68	68	68	68	68	68	68	68	68
	90	64	64	64	64	64	64	64	64	64	64	64	64	64

Notes:

1. Tables are based on critical rail span for load combinations as specified in chapter 2 of the ASCE 7-16 and allowable design loads per the 2015 Aluminum Design Manual.
2. Panels are assumed to be in landscape orientation with a maximum width of 42"

Structural ENGINUITY INC
Ingenuity in Engineering

SUNMODO®

Max Rail Spans for SunModo SMR200 Rail System

Table 103b

Mean Roof Height: h ≤ 15 ft
Roof Angle: 20 < θ ≤ 27 degrees
Exposure Category: B
Panel Orientation: Landscape
North/South Support γ_E = 1.5
Roof Type : Gable

Roof Wind Zone	Ground Snow Load (psf)	Wind Speed (mph)												
		90	95	100	105	110	115	120	130	140	150	160	170	180
Zones 1 & 2e	0	139	139	139	139	139	135	131	122	115	109	103	99	94
	10	139	139	139	139	139	135	131	122	115	109	103	99	94
	20	123	123	123	123	123	123	123	122	115	109	103	99	94
	30	105	105	105	105	105	105	105	105	105	105	103	99	94
	40	93	93	93	93	93	93	93	93	93	93	93	93	93
	50	84	84	84	84	84	84	84	84	84	84	84	84	84
	60	78	78	78	78	78	78	78	78	78	78	78	78	78
	70	72	72	72	72	72	72	72	72	72	72	72	72	72
	80	68	68	68	68	68	68	68	68	68	68	68	68	68
	90	64	64	64	64	64	64	64	64	64	64	64	64	64
Zones 2n, 2r, & 3e	0	139	136	130	124	119	114	110	103	97	89	82	76	70
	10	139	136	130	124	119	114	110	103	97	89	82	76	70
	20	123	123	123	123	119	114	110	103	97	89	82	76	70
	30	105	105	105	105	105	105	105	103	97	89	82	76	70
	40	93	93	93	93	93	93	93	93	93	89	82	76	70
	50	84	84	84	84	84	84	84	84	84	84	82	76	70
	60	78	78	78	78	78	78	78	78	78	78	78	76	70
	70	72	72	72	72	72	72	72	72	72	72	72	72	70
	80	68	68	68	68	68	68	68	68	68	68	68	68	68
	90	64	64	64	64	64	64	64	64	64	64	64	64	64
Zone 3r	0	135	128	122	117	112	108	104	97	88	80	74	68	64
	10	135	128	122	117	112	108	104	97	88	80	74	68	64
	20	123	123	122	117	112	108	104	97	88	80	74	68	64
	30	105	105	105	105	105	105	104	97	88	80	74	68	64
	40	93	93	93	93	93	93	93	93	88	80	74	68	64
	50	84	84	84	84	84	84	84	84	84	80	74	68	64
	60	78	78	78	78	78	78	78	78	78	78	74	68	64
	70	72	72	72	72	72	72	72	72	72	72	72	68	64
	80	68	68	68	68	68	68	68	68	68	68	68	68	64
	90	64	64	64	64	64	64	64	64	64	64	64	64	64

Notes:

1. Tables are based on critical rail span for load combinations as specified in chapter 2 of the ASCE 7-16 and allowable design loads per the 2015 Aluminum Design Manual.
2. Panels are assumed to be in landscape orientation with a maximum width of 42"

Structural ENGINUITY INC
Ingenuity in Engineering

SUNMODO®

Max Rail Spans for SunModo SMR200 Rail System

Table 104a

Mean Roof Height: h ≤ 15 ft
Roof Angle: 20 < θ ≤ 27 degrees
Exposure Category: C
Panel Orientation: Landscape
North/South Support Y_E = 1
Roof Type : Gable

Roof Wind Zone	Ground Snow Load (psf)	Wind Speed (mph)												
		90	95	100	105	110	115	120	130	140	150	160	170	180
Zones 1 & 2e	0	139	139	139	139	139	136	131	122	115	109	104	99	94
	10	139	139	139	139	139	136	131	122	115	109	104	99	94
	20	123	123	123	123	123	123	123	122	115	109	104	99	94
	30	105	105	105	105	105	105	105	105	105	105	103	99	94
	40	93	93	93	93	93	93	93	93	93	93	93	92	91
	50	84	84	84	84	84	84	84	84	84	84	84	84	84
	60	78	78	78	78	78	78	78	78	78	78	78	78	78
	70	72	72	72	72	72	72	72	72	72	72	72	72	72
	80	68	68	68	68	68	68	68	68	68	68	68	68	68
	90	64	64	64	64	64	64	64	64	64	64	64	64	64
Zones 2n, 2r, & 3e	0	139	137	130	124	119	115	110	103	97	89	82	76	71
	10	139	137	130	124	119	115	110	103	97	89	82	76	71
	20	123	123	123	123	119	115	110	103	97	89	82	76	71
	30	105	105	105	105	105	105	105	103	97	89	82	76	71
	40	93	93	93	93	93	93	93	93	93	89	82	76	71
	50	84	84	84	84	84	84	84	84	84	84	82	76	71
	60	78	78	78	78	78	78	78	78	78	78	78	76	71
	70	72	72	72	72	72	72	72	72	72	72	72	72	71
	80	68	68	68	68	68	68	68	68	68	68	68	68	68
	90	64	64	64	64	64	64	64	64	64	64	64	64	64
Zone 3r	0	136	129	123	117	112	108	104	97	89	81	74	68	64
	10	136	129	123	117	112	108	104	97	89	81	74	68	64
	20	123	123	123	117	112	108	104	97	89	81	74	68	64
	30	105	105	105	105	105	105	104	97	89	81	74	68	64
	40	93	93	93	93	93	93	93	93	89	81	74	68	64
	50	84	84	84	84	84	84	84	84	84	81	74	68	64
	60	78	78	78	78	78	78	78	78	78	78	74	68	64
	70	72	72	72	72	72	72	72	72	72	72	72	68	64
	80	68	68	68	68	68	68	68	68	68	68	68	68	64
	90	64	64	64	64	64	64	64	64	64	64	64	64	64

Notes:

1. Tables are based on critical rail span for load combinations as specified in chapter 2 of the ASCE 7-16 and allowable design loads per the 2015 Aluminum Design Manual.
2. Panels are assumed to be in landscape orientation with a maximum width of 42"

Structural ENGINUITY INC
Ingenuity in Engineering

SUNMODO®

Max Rail Spans for SunModo SMR200 Rail System

Table 104b

Mean Roof Height: h ≤ 15 ft
Roof Angle: 20 < θ ≤ 27 degrees
Exposure Category: C
Panel Orientation: Landscape
North/South Support γ_E = 1.5
Roof Type : Gable

Roof Wind Zone	Ground Snow Load (psf)	Wind Speed (mph)												
		90	95	100	105	110	115	120	130	140	150	160	170	180
Zones 1 & 2e	0	139	134	129	124	119	115	111	104	98	92	85	80	75
	10	139	134	129	124	119	115	111	104	98	92	85	80	75
	20	123	123	123	123	119	115	111	104	98	92	85	80	75
	30	105	105	105	105	105	105	105	104	98	92	85	80	75
	40	93	93	93	93	93	93	93	93	93	92	85	80	75
	50	84	84	84	84	84	84	84	84	84	84	84	80	75
	60	78	78	78	78	78	78	78	78	78	78	78	78	75
	70	72	72	72	72	72	72	72	72	72	72	72	72	72
	80	68	68	68	68	68	68	68	68	68	68	68	68	68
	90	64	64	64	64	64	64	64	64	64	64	64	64	64
Zones 2n, 2r, & 3e	0	119	113	108	104	100	96	92	83	75	69	64	60	57
	10	119	113	108	104	100	96	92	83	75	69	64	60	57
	20	119	113	108	104	100	96	92	83	75	69	64	60	57
	30	105	105	105	104	100	96	92	83	75	69	64	60	57
	40	93	93	93	93	93	93	92	83	75	69	64	60	57
	50	84	84	84	84	84	84	84	83	75	69	64	60	57
	60	78	78	78	78	78	78	78	78	75	69	64	60	57
	70	72	72	72	72	72	72	72	72	72	69	64	60	57
	80	68	68	68	68	68	68	68	68	68	68	64	60	57
	90	64	64	64	64	64	64	64	64	64	64	64	60	57
Zone 3r	0	112	107	102	98	93	88	83	75	68	62	58	54	51
	10	112	107	102	98	93	88	83	75	68	62	58	54	51
	20	112	107	102	98	93	88	83	75	68	62	58	54	51
	30	105	105	102	98	93	88	83	75	68	62	58	54	51
	40	93	93	93	93	93	88	83	75	68	62	58	54	51
	50	84	84	84	84	84	84	83	75	68	62	58	54	51
	60	78	78	78	78	78	78	78	75	68	62	58	54	51
	70	72	72	72	72	72	72	72	72	68	62	58	54	51
	80	68	68	68	68	68	68	68	68	68	62	58	54	51
	90	64	64	64	64	64	64	64	64	64	62	58	54	51

Notes:

1. Tables are based on critical rail span for load combinations as specified in chapter 2 of the ASCE 7-16 and allowable design loads per the 2015 Aluminum Design Manual.
2. Panels are assumed to be in landscape orientation with a maximum width of 42"

Structural ENGINUITY INC
Ingenuity in Engineering

SUNMODO®

Max Rail Spans for SunModo SMR200 Rail System

Table 105a

Mean Roof Height: h ≤ 15 ft
Roof Angle: 20 < θ ≤ 27 degrees
Exposure Category: D
Panel Orientation: Landscape
North/South Support $Y_E = 1$
Roof Type : Gable

Roof Wind Zone	Ground Snow Load (psf)	Wind Speed (mph)												
		90	95	100	105	110	115	120	130	140	150	160	170	180
Zones 1 & 2e	0	139	139	139	135	130	125	121	113	107	101	96	90	84
	10	139	139	139	135	130	125	121	113	107	101	96	90	84
	20	123	123	123	123	123	123	121	113	107	101	96	90	84
	30	105	105	105	105	105	105	105	105	104	101	96	90	84
	40	93	93	93	93	93	93	93	93	93	93	92	90	84
	50	84	84	84	84	84	84	84	84	84	84	84	84	82
	60	78	78	78	78	78	78	78	78	78	78	78	78	77
	70	72	72	72	72	72	72	72	72	72	72	72	72	72
	80	68	68	68	68	68	68	68	68	68	68	68	68	68
	90	64	64	64	64	64	64	64	64	64	64	64	64	64
Zones 2n, 2r, & 3e	0	131	125	119	114	110	105	102	95	86	79	73	67	63
	10	131	125	119	114	110	105	102	95	86	79	73	67	63
	20	123	123	119	114	110	105	102	95	86	79	73	67	63
	30	105	105	105	105	105	105	102	95	86	79	73	67	63
	40	93	93	93	93	93	93	93	93	86	79	73	67	63
	50	84	84	84	84	84	84	84	84	84	79	73	67	63
	60	78	78	78	78	78	78	78	78	78	78	73	67	63
	70	72	72	72	72	72	72	72	72	72	72	72	67	63
	80	68	68	68	68	68	68	68	68	68	68	68	67	63
	90	64	64	64	64	64	64	64	64	64	64	64	64	63
Zone 3r	0	124	118	112	107	103	99	96	86	78	71	66	61	57
	10	124	118	112	107	103	99	96	86	78	71	66	61	57
	20	123	118	112	107	103	99	96	86	78	71	66	61	57
	30	105	105	105	105	103	99	96	86	78	71	66	61	57
	40	93	93	93	93	93	93	93	86	78	71	66	61	57
	50	84	84	84	84	84	84	84	84	78	71	66	61	57
	60	78	78	78	78	78	78	78	78	78	71	66	61	57
	70	72	72	72	72	72	72	72	72	72	71	66	61	57
	80	68	68	68	68	68	68	68	68	68	68	66	61	57
	90	64	64	64	64	64	64	64	64	64	64	64	61	57

Notes:

1. Tables are based on critical rail span for load combinations as specified in chapter 2 of the ASCE 7-16 and allowable design loads per the 2015 Aluminum Design Manual.
2. Panels are assumed to be in landscape orientation with a maximum width of 42"

Structural ENGINUITY INC
Ingenuity in Engineering

SUNMODO®

Max Rail Spans for SunModo SMR200 Rail System

Table 105b

Mean Roof Height: h ≤ 15 ft
Roof Angle: 20 < θ ≤ 27 degrees
Exposure Category: D
Panel Orientation: Landscape
North/South Support γ_E = 1.5
Roof Type : Gable

Roof Wind Zone	Ground Snow Load (psf)	Wind Speed (mph)												
		90	95	100	105	110	115	120	130	140	150	160	170	180
Zones 1 & 2e	0	130	124	119	114	110	106	103	96	89	82	77	71	67
	10	130	124	119	114	110	106	103	96	89	82	77	71	67
	20	123	123	119	114	110	106	103	96	89	82	77	71	67
	30	105	105	105	105	105	105	103	96	89	82	77	71	67
	40	93	93	93	93	93	93	93	93	89	82	77	71	67
	50	84	84	84	84	84	84	84	84	84	82	77	71	67
	60	78	78	78	78	78	78	78	78	78	78	77	71	67
	70	72	72	72	72	72	72	72	72	72	72	72	71	67
	80	68	68	68	68	68	68	68	68	68	68	68	68	67
	90	64	64	64	64	64	64	64	64	64	64	64	64	64
Zones 2n, 2r, & 3e	0	109	104	100	96	91	86	81	73	67	62	58	55	52
	10	109	104	100	96	91	86	81	73	67	62	58	55	52
	20	109	104	100	96	91	86	81	73	67	62	58	55	52
	30	105	104	100	96	91	86	81	73	67	62	58	55	52
	40	93	93	93	93	91	86	81	73	67	62	58	55	52
	50	84	84	84	84	84	84	81	73	67	62	58	55	52
	60	78	78	78	78	78	78	78	73	67	62	58	55	52
	70	72	72	72	72	72	72	72	72	67	62	58	55	52
	80	68	68	68	68	68	68	68	68	67	62	58	55	52
	90	64	64	64	64	64	64	64	64	64	62	58	55	52
Zone 3r	0	103	98	93	87	82	77	73	66	60	56	52	48	45
	10	103	98	93	87	82	77	73	66	60	56	52	48	45
	20	103	98	93	87	82	77	73	66	60	56	52	48	45
	30	103	98	93	87	82	77	73	66	60	56	52	48	45
	40	93	93	93	87	82	77	73	66	60	56	52	48	45
	50	84	84	84	84	82	77	73	66	60	56	52	48	45
	60	78	78	78	78	78	77	73	66	60	56	52	48	45
	70	72	72	72	72	72	72	72	66	60	56	52	48	45
	80	68	68	68	68	68	68	68	66	60	56	52	48	45
	90	64	64	64	64	64	64	64	64	60	56	52	48	45

Notes:

1. Tables are based on critical rail span for load combinations as specified in chapter 2 of the ASCE 7-16 and allowable design loads per the 2015 Aluminum Design Manual.
2. Panels are assumed to be in landscape orientation with a maximum width of 42"

Structural ENGINUITY INC
Ingenuity in Engineering

SUNMODO®

Max Rail Spans for SunModo SMR200 Rail System

Table 106a

Mean Roof Height: h ≤ 15 ft
Roof Angle: 27 < θ ≤ 45 degrees
Exposure Category: B
Panel Orientation: Landscape
North/South Support $Y_E = 1$
Roof Type : Gable

Roof Wind Zone	Ground Snow Load (psf)	Wind Speed (mph)												
		90	95	100	105	110	115	120	130	140	150	160	170	180
Zones 1, 2e, & 2r	0	139	139	139	139	139	139	139	139	134	126	119	112	107
	10	139	139	139	139	139	139	139	139	134	126	119	112	107
	20	127	127	127	127	127	127	126	124	122	119	117	112	107
	30	110	110	110	110	110	110	110	110	109	107	105	103	101
	40	98	98	98	98	98	98	98	98	98	98	96	95	93
	50	89	89	89	89	89	89	89	89	89	89	89	88	87
	60	82	82	82	82	82	82	82	82	82	82	82	82	82
	70	77	77	77	77	77	77	77	77	77	77	77	77	77
	80	72	72	72	72	72	72	72	72	72	72	72	72	72
	90	68	68	68	68	68	68	68	68	68	68	68	68	68
Zones 2n & 3r	0	139	139	139	139	139	139	139	133	125	118	111	106	101
	10	139	139	139	139	139	139	139	133	125	118	111	106	101
	20	127	127	127	127	127	127	126	124	122	118	111	106	101
	30	110	110	110	110	110	110	110	110	109	107	105	103	101
	40	98	98	98	98	98	98	98	98	98	98	96	95	93
	50	89	89	89	89	89	89	89	89	89	89	89	88	87
	60	82	82	82	82	82	82	82	82	82	82	82	82	82
	70	77	77	77	77	77	77	77	77	77	77	77	77	77
	80	72	72	72	72	72	72	72	72	72	72	72	72	72
	90	68	68	68	68	68	68	68	68	68	68	68	68	68
Zone 3e	0	139	139	139	139	139	135	130	121	114	107	102	96	90
	10	139	139	139	139	139	135	130	121	114	107	102	96	90
	20	127	127	127	127	127	127	126	121	114	107	102	96	90
	30	110	110	110	110	110	110	110	110	109	107	102	96	90
	40	98	98	98	98	98	98	98	98	98	98	96	95	90
	50	89	89	89	89	89	89	89	89	89	89	89	88	87
	60	82	82	82	82	82	82	82	82	82	82	82	82	82
	70	77	77	77	77	77	77	77	77	77	77	77	77	77
	80	72	72	72	72	72	72	72	72	72	72	72	72	72
	90	68	68	68	68	68	68	68	68	68	68	68	68	68

Notes:

1. Tables are based on critical rail span for load combinations as specified in chapter 2 of the ASCE 7-16 and allowable design loads per the 2015 Aluminum Design Manual.
2. Panels are assumed to be in landscape orientation with a maximum width of 42"

Structural ENGINUITY INC
Ingenuity in Engineering

SUNMODO®

Max Rail Spans for SunModo SMR200 Rail System

Table 106b

Mean Roof Height: h ≤ 15 ft
Roof Angle: 27 < θ ≤ 45 degrees
Exposure Category: B
Panel Orientation: Landscape
North/South Support γ_E = 1.5
Roof Type : Gable

Roof Wind Zone	Ground Snow Load (psf)	Wind Speed (mph)												
		90	95	100	105	110	115	120	130	140	150	160	170	180
Zones 1, 2e, & 2r	0	139	139	139	139	139	133	128	119	112	105	99	93	86
	10	139	139	139	139	139	133	128	119	112	105	99	93	86
	20	127	127	127	127	127	127	126	119	112	105	99	93	86
	30	110	110	110	110	110	110	110	110	109	105	99	93	86
	40	98	98	98	98	98	98	98	98	98	98	96	93	86
	50	89	89	89	89	89	89	89	89	89	89	89	88	86
	60	82	82	82	82	82	82	82	82	82	82	82	82	82
	70	77	77	77	77	77	77	77	77	77	77	77	77	77
	80	72	72	72	72	72	72	72	72	72	72	72	72	72
	90	68	68	68	68	68	68	68	68	68	68	68	68	68
Zones 2n & 3r	0	139	139	139	135	129	124	120	112	105	99	92	86	80
	10	139	139	139	135	129	124	120	112	105	99	92	86	80
	20	127	127	127	127	127	124	120	112	105	99	92	86	80
	30	110	110	110	110	110	110	110	110	105	99	92	86	80
	40	98	98	98	98	98	98	98	98	98	98	92	86	80
	50	89	89	89	89	89	89	89	89	89	89	89	86	80
	60	82	82	82	82	82	82	82	82	82	82	82	82	80
	70	77	77	77	77	77	77	77	77	77	77	77	77	77
	80	72	72	72	72	72	72	72	72	72	72	72	72	72
	90	68	68	68	68	68	68	68	68	68	68	68	68	68
Zone 3e	0	139	134	128	122	118	113	109	102	95	87	81	75	70
	10	139	134	128	122	118	113	109	102	95	87	81	75	70
	20	127	127	127	122	118	113	109	102	95	87	81	75	70
	30	110	110	110	110	110	110	109	102	95	87	81	75	70
	40	98	98	98	98	98	98	98	98	95	87	81	75	70
	50	89	89	89	89	89	89	89	89	89	87	81	75	70
	60	82	82	82	82	82	82	82	82	82	82	81	75	70
	70	77	77	77	77	77	77	77	77	77	77	77	75	70
	80	72	72	72	72	72	72	72	72	72	72	72	72	70
	90	68	68	68	68	68	68	68	68	68	68	68	68	68

Notes:

1. Tables are based on critical rail span for load combinations as specified in chapter 2 of the ASCE 7-16 and allowable design loads per the 2015 Aluminum Design Manual.
2. Panels are assumed to be in landscape orientation with a maximum width of 42"

Structural ENGINUITY INC
Ingenuity in Engineering

SUNMODO®

Max Rail Spans for SunModo SMR200 Rail System

Table 107a

Mean Roof Height: h ≤ 15 ft
Roof Angle: 27 < θ ≤ 45 degrees
Exposure Category: C
Panel Orientation: Landscape
North/South Support $Y_E = 1$
Roof Type : Gable

Roof Wind Zone	Ground Snow Load (psf)	Wind Speed (mph)												
		90	95	100	105	110	115	120	130	140	150	160	170	180
Zones 1, 2e, & 2r	0	139	139	139	139	139	134	129	120	112	105	100	93	87
	10	139	139	139	139	138	134	129	120	112	105	100	93	87
	20	127	127	126	124	123	122	120	117	112	105	100	93	87
	30	110	110	110	110	110	109	107	105	103	100	98	93	87
	40	98	98	98	98	98	98	98	96	94	93	91	89	87
	50	89	89	89	89	89	89	89	89	88	86	85	83	81
	60	82	82	82	82	82	82	82	82	82	81	80	78	77
	70	77	77	77	77	77	77	77	77	77	77	76	75	73
	80	72	72	72	72	72	72	72	72	72	72	72	71	70
	90	68	68	68	68	68	68	68	68	68	68	68	68	67
Zones 2n & 3r	0	139	139	139	135	129	124	120	112	105	99	93	86	80
	10	139	139	139	135	129	124	120	112	105	99	93	86	80
	20	127	127	126	124	123	122	120	112	105	99	93	86	80
	30	110	110	110	110	110	109	107	105	103	99	93	86	80
	40	98	98	98	98	98	98	98	96	94	93	91	86	80
	50	89	89	89	89	89	89	89	89	88	86	85	83	80
	60	82	82	82	82	82	82	82	82	82	81	80	78	77
	70	77	77	77	77	77	77	77	77	77	77	76	75	73
	80	72	72	72	72	72	72	72	72	72	72	72	71	70
	90	68	68	68	68	68	68	68	68	68	68	68	68	67
Zone 3e	0	139	134	128	123	118	113	109	102	96	88	81	75	70
	10	139	134	128	123	118	113	109	102	96	88	81	75	70
	20	127	127	126	123	118	113	109	102	96	88	81	75	70
	30	110	110	110	110	110	109	107	102	96	88	81	75	70
	40	98	98	98	98	98	98	98	96	94	88	81	75	70
	50	89	89	89	89	89	89	89	89	88	86	81	75	70
	60	82	82	82	82	82	82	82	82	82	81	80	75	70
	70	77	77	77	77	77	77	77	77	77	77	76	75	70
	80	72	72	72	72	72	72	72	72	72	72	72	71	70
	90	68	68	68	68	68	68	68	68	68	68	68	68	67

Notes:

1. Tables are based on critical rail span for load combinations as specified in chapter 2 of the ASCE 7-16 and allowable design loads per the 2015 Aluminum Design Manual.
2. Panels are assumed to be in landscape orientation with a maximum width of 42"

Structural ENGINUITY INC
Ingenuity in Engineering

SUNMODO®

Max Rail Spans for SunModo SMR200 Rail System

Table 107b

Mean Roof Height: h ≤ 15 ft
Roof Angle: 27 < θ ≤ 45 degrees
Exposure Category: C
Panel Orientation: Landscape
North/South Support γ_E = 1.5
Roof Type : Gable

Roof Wind Zone	Ground Snow Load (psf)	Wind Speed (mph)												
		90	95	100	105	110	115	120	130	140	150	160	170	180
Zones 1, 2e, & 2r	0	139	132	126	121	116	111	107	100	92	84	77	72	67
	10	139	132	126	121	116	111	107	100	92	84	77	72	67
	20	127	127	126	121	116	111	107	100	92	84	77	72	67
	30	110	110	110	110	110	109	107	100	92	84	77	72	67
	40	98	98	98	98	98	98	98	96	92	84	77	72	67
	50	89	89	89	89	89	89	89	89	88	84	77	72	67
	60	82	82	82	82	82	82	82	82	82	81	77	72	67
	70	77	77	77	77	77	77	77	77	77	77	76	72	67
	80	72	72	72	72	72	72	72	72	72	72	72	71	67
	90	68	68	68	68	68	68	68	68	68	68	68	68	67
Zones 2n & 3r	0	129	123	118	113	109	105	101	93	85	78	72	67	63
	10	129	123	118	113	109	105	101	93	85	78	72	67	63
	20	127	123	118	113	109	105	101	93	85	78	72	67	63
	30	110	110	110	110	109	105	101	93	85	78	72	67	63
	40	98	98	98	98	98	98	98	93	85	78	72	67	63
	50	89	89	89	89	89	89	89	89	85	78	72	67	63
	60	82	82	82	82	82	82	82	82	82	78	72	67	63
	70	77	77	77	77	77	77	77	77	77	77	72	67	63
	80	72	72	72	72	72	72	72	72	72	72	72	67	63
	90	68	68	68	68	68	68	68	68	68	68	68	67	63
Zone 3e	0	118	112	107	103	99	95	90	81	74	68	63	59	56
	10	118	112	107	103	99	95	90	81	74	68	63	59	56
	20	118	112	107	103	99	95	90	81	74	68	63	59	56
	30	110	110	107	103	99	95	90	81	74	68	63	59	56
	40	98	98	98	98	98	95	90	81	74	68	63	59	56
	50	89	89	89	89	89	89	89	81	74	68	63	59	56
	60	82	82	82	82	82	82	82	81	74	68	63	59	56
	70	77	77	77	77	77	77	77	77	74	68	63	59	56
	80	72	72	72	72	72	72	72	72	72	68	63	59	56
	90	68	68	68	68	68	68	68	68	68	68	63	59	56

Notes:

1. Tables are based on critical rail span for load combinations as specified in chapter 2 of the ASCE 7-16 and allowable design loads per the 2015 Aluminum Design Manual.
2. Panels are assumed to be in landscape orientation with a maximum width of 42"

Structural ENGINUITY INC
Ingenuity in Engineering

SUNMODO®

Max Rail Spans for SunModo SMR200 Rail System

Table 108a

Mean Roof Height: h ≤ 15 ft
Roof Angle: 27 < θ ≤ 45 degrees
Exposure Category: D
Panel Orientation: Landscape
North/South Support $Y_E = 1$
Roof Type : Gable

Roof Wind Zone	Ground Snow Load (psf)	Wind Speed (mph)												
		90	95	100	105	110	115	120	130	140	150	160	170	180
Zones 1, 2e, & 2r	0	139	139	139	133	128	122	118	110	103	97	89	82	76
	10	139	139	138	133	128	122	118	110	103	97	89	82	76
	20	126	125	123	121	120	118	116	110	103	97	89	82	76
	30	110	110	110	108	107	106	105	102	99	97	89	82	76
	40	98	98	98	98	98	97	96	94	92	90	87	82	76
	50	89	89	89	89	89	89	89	87	86	84	82	80	76
	60	82	82	82	82	82	82	82	82	81	79	78	76	74
	70	77	77	77	77	77	77	77	77	77	75	74	72	71
	80	72	72	72	72	72	72	72	72	72	72	71	69	68
	90	68	68	68	68	68	68	68	68	68	68	68	67	66
Zones 2n & 3r	0	139	135	129	124	119	115	110	103	97	89	82	76	71
	10	139	135	129	124	119	115	110	103	97	89	82	76	71
	20	126	125	123	121	119	115	110	103	97	89	82	76	71
	30	110	110	110	108	107	106	105	102	97	89	82	76	71
	40	98	98	98	98	98	97	96	94	92	89	82	76	71
	50	89	89	89	89	89	89	89	87	86	84	82	76	71
	60	82	82	82	82	82	82	82	82	81	79	78	76	71
	70	77	77	77	77	77	77	77	77	77	75	74	72	71
	80	72	72	72	72	72	72	72	72	72	72	71	69	68
	90	68	68	68	68	68	68	68	68	68	68	68	67	66
Zone 3e	0	129	123	118	113	109	105	101	93	85	78	72	67	63
	10	129	123	118	113	109	105	101	93	85	78	72	67	63
	20	126	123	118	113	109	105	101	93	85	78	72	67	63
	30	110	110	110	108	107	105	101	93	85	78	72	67	63
	40	98	98	98	98	98	97	96	93	85	78	72	67	63
	50	89	89	89	89	89	89	89	87	85	78	72	67	63
	60	82	82	82	82	82	82	82	82	81	78	72	67	63
	70	77	77	77	77	77	77	77	77	77	75	72	67	63
	80	72	72	72	72	72	72	72	72	72	72	71	67	63
	90	68	68	68	68	68	68	68	68	68	68	68	67	63

Notes:

1. Tables are based on critical rail span for load combinations as specified in chapter 2 of the ASCE 7-16 and allowable design loads per the 2015 Aluminum Design Manual.
2. Panels are assumed to be in landscape orientation with a maximum width of 42"

Structural ENGINUITY INC
Ingenuity in Engineering

SUNMODO®

Max Rail Spans for SunModo SMR200 Rail System

Table 108b

Mean Roof Height: h ≤ 15 ft
Roof Angle: 27 < θ ≤ 45 degrees
Exposure Category: D
Panel Orientation: Landscape
North/South Support γ_E = 1.5
Roof Type : Gable

Roof Wind Zone	Ground Snow Load (psf)	Wind Speed (mph)												
		90	95	100	105	110	115	120	130	140	150	160	170	180
Zones 1, 2e, & 2r	0	127	121	116	111	106	102	99	90	81	74	68	64	61
	10	127	121	116	111	106	102	99	90	81	74	68	64	61
	20	126	121	116	111	106	102	99	90	81	74	68	64	61
	30	110	110	110	108	106	102	99	90	81	74	68	64	61
	40	98	98	98	98	98	97	96	90	81	74	68	64	61
	50	89	89	89	89	89	89	89	87	81	74	68	64	61
	60	82	82	82	82	82	82	82	82	81	74	68	64	61
	70	77	77	77	77	77	77	77	77	77	74	68	64	61
	80	72	72	72	72	72	72	72	72	72	72	68	64	61
	90	68	68	68	68	68	68	68	68	68	68	68	64	61
Zones 2n & 3r	0	119	113	109	104	100	97	92	83	76	69	65	61	58
	10	119	113	109	104	100	97	92	83	76	69	65	61	58
	20	119	113	109	104	100	97	92	83	76	69	65	61	58
	30	110	110	109	104	100	97	92	83	76	69	65	61	58
	40	98	98	98	98	98	97	92	83	76	69	65	61	58
	50	89	89	89	89	89	89	89	83	76	69	65	61	58
	60	82	82	82	82	82	82	82	82	76	69	65	61	58
	70	77	77	77	77	77	77	77	77	76	69	65	61	58
	80	72	72	72	72	72	72	72	72	72	69	65	61	58
	90	68	68	68	68	68	68	68	68	68	68	65	61	58
Zone 3e	0	108	104	99	94	89	84	80	72	66	61	57	53	50
	10	108	104	99	94	89	84	80	72	66	61	57	53	50
	20	108	104	99	94	89	84	80	72	66	61	57	53	50
	30	108	104	99	94	89	84	80	72	66	61	57	53	50
	40	98	98	98	94	89	84	80	72	66	61	57	53	50
	50	89	89	89	89	89	84	80	72	66	61	57	53	50
	60	82	82	82	82	82	82	80	72	66	61	57	53	50
	70	77	77	77	77	77	77	77	72	66	61	57	53	50
	80	72	72	72	72	72	72	72	72	66	61	57	53	50
	90	68	68	68	68	68	68	68	68	66	61	57	53	50

Notes:

1. Tables are based on critical rail span for load combinations as specified in chapter 2 of the ASCE 7-16 and allowable design loads per the 2015 Aluminum Design Manual.
2. Panels are assumed to be in landscape orientation with a maximum width of 42"

Structural ENGINUITY INC
Ingenuity in Engineering

SUNMODO®

Max Rail Spans for SunModo SMR200 Rail System

Table 109a

Mean Roof Height: h ≤ 15 ft
Roof Angle: 7 < θ ≤ 20 degrees
Exposure Category: B
Panel Orientation: Landscape
North/South Support γ_E = 1
Roof Type : Hip h/B = ≥ 0.8

Roof Wind Zone	Ground Snow Load (psf)	Wind Speed (mph)												
		90	95	100	105	110	115	120	130	140	150	160	170	180
Zone 1	0	139	139	139	139	139	139	139	135	126	119	113	108	103
	10	132	132	132	132	132	131	130	128	126	119	113	108	103
	20	104	104	104	104	104	104	104	104	104	104	104	103	102
	30	104	104	104	104	104	104	104	104	104	104	104	103	102
	40	92	92	92	92	92	92	92	92	92	92	92	92	92
	50	83	83	83	83	83	83	83	83	83	83	83	83	83
	60	77	77	77	77	77	77	77	77	77	77	77	77	77
	70	72	72	72	72	72	72	72	72	72	72	72	72	72
	80	67	67	67	67	67	67	67	67	67	67	67	67	67
	90	64	64	64	64	64	64	64	64	64	64	64	64	64
Zone 2r	0	139	139	139	139	139	139	133	124	116	109	104	98	94
	10	132	132	132	132	132	131	130	124	116	109	104	98	94
	20	104	104	104	104	104	104	104	104	104	104	104	98	94
	30	104	104	104	104	104	104	104	104	104	104	104	98	94
	40	92	92	92	92	92	92	92	92	92	92	92	92	92
	50	83	83	83	83	83	83	83	83	83	83	83	83	83
	60	77	77	77	77	77	77	77	77	77	77	77	77	77
	70	72	72	72	72	72	72	72	72	72	72	72	72	72
	80	67	67	67	67	67	67	67	67	67	67	67	67	67
	90	64	64	64	64	64	64	64	64	64	64	64	64	64
Zones 2e & 3	0	139	139	139	139	139	134	129	120	112	106	100	95	89
	10	132	132	132	132	132	131	129	120	112	106	100	95	89
	20	104	104	104	104	104	104	104	104	104	104	100	95	89
	30	104	104	104	104	104	104	104	104	104	104	100	95	89
	40	92	92	92	92	92	92	92	92	92	92	92	92	89
	50	83	83	83	83	83	83	83	83	83	83	83	83	83
	60	77	77	77	77	77	77	77	77	77	77	77	77	77
	70	72	72	72	72	72	72	72	72	72	72	72	72	72
	80	67	67	67	67	67	67	67	67	67	67	67	67	67
	90	64	64	64	64	64	64	64	64	64	64	64	64	64

Notes:

1. Tables are based on critical rail span for load combinations as specified in chapter 2 of the ASCE 7-16 and allowable design loads per the 2015 Aluminum Design Manual.
2. Panels are assumed to be in landscape orientation with a maximum width of 42"

Structural ENGINUITY INC
Ingenuity in Engineering

SUNMODO®

Max Rail Spans for SunModo SMR200 Rail System

Table 109b

Mean Roof Height: h ≤ 15 ft
Roof Angle: 7 < θ ≤ 20 degrees
Exposure Category: B
Panel Orientation: Landscape
North/South Support γ_E = 1.5
Roof Type : Hip h/B = ≥ 0.8

Roof Wind Zone	Ground Snow Load (psf)	Wind Speed (mph)												
		90	95	100	105	110	115	120	130	140	150	160	170	180
Zone 1	0	139	139	139	136	131	126	121	114	107	101	96	91	85
	10	132	132	132	132	131	126	121	114	107	101	96	91	85
	20	104	104	104	104	104	104	104	104	104	101	96	91	85
	30	104	104	104	104	104	104	104	104	104	101	96	91	85
	40	92	92	92	92	92	92	92	92	92	92	92	91	85
	50	83	83	83	83	83	83	83	83	83	83	83	83	83
	60	77	77	77	77	77	77	77	77	77	77	77	77	77
	70	72	72	72	72	72	72	72	72	72	72	72	72	72
	80	67	67	67	67	67	67	67	67	67	67	67	67	67
	90	64	64	64	64	64	64	64	64	64	64	64	64	64
Zone 2r	0	139	137	131	125	120	116	111	104	98	91	84	78	72
	10	132	132	131	125	120	116	111	104	98	91	84	78	72
	20	104	104	104	104	104	104	104	104	98	91	84	78	72
	30	104	104	104	104	104	104	104	104	98	91	84	78	72
	40	92	92	92	92	92	92	92	92	92	91	84	78	72
	50	83	83	83	83	83	83	83	83	83	83	83	78	72
	60	77	77	77	77	77	77	77	77	77	77	77	77	72
	70	72	72	72	72	72	72	72	72	72	72	72	72	72
	80	67	67	67	67	67	67	67	67	67	67	67	67	67
	90	64	64	64	64	64	64	64	64	64	64	64	64	64
Zones 2e & 3	0	139	132	126	121	116	112	108	101	95	87	80	74	69
	10	132	132	126	121	116	112	108	101	95	87	80	74	69
	20	104	104	104	104	104	104	104	101	95	87	80	74	69
	30	104	104	104	104	104	104	104	101	95	87	80	74	69
	40	92	92	92	92	92	92	92	92	92	87	80	74	69
	50	83	83	83	83	83	83	83	83	83	83	80	74	69
	60	77	77	77	77	77	77	77	77	77	77	77	74	69
	70	72	72	72	72	72	72	72	72	72	72	72	72	69
	80	67	67	67	67	67	67	67	67	67	67	67	67	67
	90	64	64	64	64	64	64	64	64	64	64	64	64	64

Notes:

1. Tables are based on critical rail span for load combinations as specified in chapter 2 of the ASCE 7-16 and allowable design loads per the 2015 Aluminum Design Manual.
2. Panels are assumed to be in landscape orientation with a maximum width of 42"

Structural ENGINUITY INC
Ingenuity in Engineering

SUNMODO®

Max Rail Spans for SunModo SMR200 Rail System

Table 110a

Mean Roof Height: h ≤ 15 ft
Roof Angle: 7 < θ ≤ 20 degrees
Exposure Category: C
Panel Orientation: Landscape
North/South Support Y_E = 1
Roof Type : Hip h/B = ≥ 0.8

Roof Wind Zone	Ground Snow Load (psf)	Wind Speed (mph)												
		90	95	100	105	110	115	120	130	140	150	160	170	180
Zone 1	0	139	139	139	136	131	126	122	114	107	102	97	91	85
	10	132	131	130	129	127	126	122	114	107	102	97	91	85
	20	104	104	104	104	104	104	104	104	103	101	97	91	85
	30	104	104	104	104	104	104	104	104	103	101	97	91	85
	40	92	92	92	92	92	92	92	92	92	92	91	89	85
	50	83	83	83	83	83	83	83	83	83	83	83	83	81
	60	77	77	77	77	77	77	77	77	77	77	77	77	76
	70	72	72	72	72	72	72	72	72	72	72	72	72	72
	80	67	67	67	67	67	67	67	67	67	67	67	67	67
	90	64	64	64	64	64	64	64	64	64	64	64	64	64
Zone 2r	0	139	138	131	126	120	116	112	104	98	92	84	78	73
	10	132	131	130	126	120	116	112	104	98	92	84	78	73
	20	104	104	104	104	104	104	104	104	98	92	84	78	73
	30	104	104	104	104	104	104	104	104	98	92	84	78	73
	40	92	92	92	92	92	92	92	92	92	92	84	78	73
	50	83	83	83	83	83	83	83	83	83	83	83	78	73
	60	77	77	77	77	77	77	77	77	77	77	77	77	73
	70	72	72	72	72	72	72	72	72	72	72	72	72	72
	80	67	67	67	67	67	67	67	67	67	67	67	67	67
	90	64	64	64	64	64	64	64	64	64	64	64	64	64
Zones 2e & 3	0	139	133	127	121	116	112	108	101	95	87	80	74	69
	10	132	131	127	121	116	112	108	101	95	87	80	74	69
	20	104	104	104	104	104	104	104	101	95	87	80	74	69
	30	104	104	104	104	104	104	104	101	95	87	80	74	69
	40	92	92	92	92	92	92	92	92	92	87	80	74	69
	50	83	83	83	83	83	83	83	83	83	83	80	74	69
	60	77	77	77	77	77	77	77	77	77	77	77	74	69
	70	72	72	72	72	72	72	72	72	72	72	72	72	69
	80	67	67	67	67	67	67	67	67	67	67	67	67	67
	90	64	64	64	64	64	64	64	64	64	64	64	64	64

Notes:

1. Tables are based on critical rail span for load combinations as specified in chapter 2 of the ASCE 7-16 and allowable design loads per the 2015 Aluminum Design Manual.
2. Panels are assumed to be in landscape orientation with a maximum width of 42"

Structural ENGINUITY INC
Ingenuity in Engineering

SUNMODO®

Max Rail Spans for SunModo SMR200 Rail System

Table 110b

Mean Roof Height: h ≤ 15 ft
Roof Angle: 7 < θ ≤ 20 degrees
Exposure Category: C
Panel Orientation: Landscape
North/South Support γ_E = 1.5
Roof Type : Hip h/B = ≥ 0.8

Roof Wind Zone	Ground Snow Load (psf)	Wind Speed (mph)												
		90	95	100	105	110	115	120	130	140	150	160	170	180
Zone 1	0	131	125	120	115	111	107	103	97	90	83	77	72	67
	10	131	125	120	115	111	107	103	97	90	83	77	72	67
	20	104	104	104	104	104	104	103	97	90	83	77	72	67
	30	104	104	104	104	104	104	103	97	90	83	77	72	67
	40	92	92	92	92	92	92	92	92	90	83	77	72	67
	50	83	83	83	83	83	83	83	83	83	83	77	72	67
	60	77	77	77	77	77	77	77	77	77	77	77	72	67
	70	72	72	72	72	72	72	72	72	72	72	72	72	67
	80	67	67	67	67	67	67	67	67	67	67	67	67	67
	90	64	64	64	64	64	64	64	64	64	64	64	64	64
Zone 2r	0	120	115	110	105	101	97	94	85	77	71	66	62	58
	10	120	115	110	105	101	97	94	85	77	71	66	62	58
	20	104	104	104	104	101	97	94	85	77	71	66	62	58
	30	104	104	104	104	101	97	94	85	77	71	66	62	58
	40	92	92	92	92	92	92	92	85	77	71	66	62	58
	50	83	83	83	83	83	83	83	83	77	71	66	62	58
	60	77	77	77	77	77	77	77	77	77	71	66	62	58
	70	72	72	72	72	72	72	72	72	72	71	66	62	58
	80	67	67	67	67	67	67	67	67	67	67	66	62	58
	90	64	64	64	64	64	64	64	64	64	64	64	62	58
Zones 2e & 3	0	116	111	106	102	98	94	89	81	73	67	63	59	56
	10	116	111	106	102	98	94	89	81	73	67	63	59	56
	20	104	104	104	102	98	94	89	81	73	67	63	59	56
	30	104	104	104	102	98	94	89	81	73	67	63	59	56
	40	92	92	92	92	92	92	89	81	73	67	63	59	56
	50	83	83	83	83	83	83	83	81	73	67	63	59	56
	60	77	77	77	77	77	77	77	77	73	67	63	59	56
	70	72	72	72	72	72	72	72	72	72	67	63	59	56
	80	67	67	67	67	67	67	67	67	67	67	63	59	56
	90	64	64	64	64	64	64	64	64	64	64	63	59	56

Notes:

1. Tables are based on critical rail span for load combinations as specified in chapter 2 of the ASCE 7-16 and allowable design loads per the 2015 Aluminum Design Manual.
2. Panels are assumed to be in landscape orientation with a maximum width of 42"

Structural ENGINUITY INC
Ingenuity in Engineering

SUNMODO®

Max Rail Spans for SunModo SMR200 Rail System

Table 111a

Mean Roof Height: h ≤ 15 ft
Roof Angle: 7 < θ ≤ 20 degrees
Exposure Category: D
Panel Orientation: Landscape
North/South Support Y_E = 1
Roof Type : Hip h/B = ≥ 0.8

Roof Wind Zone	Ground Snow Load (psf)	Wind Speed (mph)												
		90	95	100	105	110	115	120	130	140	150	160	170	180
Zone 1	0	139	137	131	125	121	116	112	105	99	94	88	82	76
	10	130	129	127	125	121	116	112	105	99	94	88	82	76
	20	104	104	104	104	104	104	104	102	99	94	88	82	76
	30	104	104	104	104	104	104	104	102	99	94	88	82	76
	40	92	92	92	92	92	92	92	92	91	90	88	82	76
	50	83	83	83	83	83	83	83	83	83	83	82	80	76
	60	77	77	77	77	77	77	77	77	77	77	77	75	74
	70	72	72	72	72	72	72	72	72	72	72	72	71	70
	80	67	67	67	67	67	67	67	67	67	67	67	67	67
	90	64	64	64	64	64	64	64	64	64	64	64	64	64
Zone 2r	0	132	126	120	115	111	107	103	96	89	81	75	69	65
	10	130	126	120	115	111	107	103	96	89	81	75	69	65
	20	104	104	104	104	104	104	103	96	89	81	75	69	65
	30	104	104	104	104	104	104	103	96	89	81	75	69	65
	40	92	92	92	92	92	92	92	92	89	81	75	69	65
	50	83	83	83	83	83	83	83	83	83	81	75	69	65
	60	77	77	77	77	77	77	77	77	77	77	75	69	65
	70	72	72	72	72	72	72	72	72	72	72	72	69	65
	80	67	67	67	67	67	67	67	67	67	67	67	67	65
	90	64	64	64	64	64	64	64	64	64	64	64	64	64
Zones 2e & 3	0	128	122	116	111	107	103	99	93	84	77	71	66	62
	10	128	122	116	111	107	103	99	93	84	77	71	66	62
	20	104	104	104	104	104	103	99	93	84	77	71	66	62
	30	104	104	104	104	104	103	99	93	84	77	71	66	62
	40	92	92	92	92	92	92	92	92	84	77	71	66	62
	50	83	83	83	83	83	83	83	83	83	77	71	66	62
	60	77	77	77	77	77	77	77	77	77	77	71	66	62
	70	72	72	72	72	72	72	72	72	72	72	71	66	62
	80	67	67	67	67	67	67	67	67	67	67	67	66	62
	90	64	64	64	64	64	64	64	64	64	64	64	64	62

Notes:

1. Tables are based on critical rail span for load combinations as specified in chapter 2 of the ASCE 7-16 and allowable design loads per the 2015 Aluminum Design Manual.
2. Panels are assumed to be in landscape orientation with a maximum width of 42"

Structural ENGINUITY INC
Ingenuity in Engineering

SUNMODO®

Max Rail Spans for SunModo SMR200 Rail System

Table 111b

Mean Roof Height: h ≤ 15 ft
Roof Angle: 7 < θ ≤ 20 degrees
Exposure Category: D
Panel Orientation: Landscape
North/South Support γ_E = 1.5
Roof Type : Hip h/B = ≥ 0.8

Roof Wind Zone	Ground Snow Load (psf)	Wind Speed (mph)												
		90	95	100	105	110	115	120	130	140	150	160	170	180
Zone 1	0	120	115	111	106	102	99	96	88	81	74	69	65	61
	10	120	115	111	106	102	99	96	88	81	74	69	65	61
	20	104	104	104	104	102	99	96	88	81	74	69	65	61
	30	104	104	104	104	102	99	96	88	81	74	69	65	61
	40	92	92	92	92	92	92	92	88	81	74	69	65	61
	50	83	83	83	83	83	83	83	83	81	74	69	65	61
	60	77	77	77	77	77	77	77	77	77	74	69	65	61
	70	72	72	72	72	72	72	72	72	72	72	69	65	61
	80	67	67	67	67	67	67	67	67	67	67	67	65	61
	90	64	64	64	64	64	64	64	64	64	64	64	64	61
Zone 2r	0	111	106	101	97	93	88	83	75	68	64	60	56	53
	10	111	106	101	97	93	88	83	75	68	64	60	56	53
	20	104	104	101	97	93	88	83	75	68	64	60	56	53
	30	104	104	101	97	93	88	83	75	68	64	60	56	53
	40	92	92	92	92	92	88	83	75	68	64	60	56	53
	50	83	83	83	83	83	83	83	75	68	64	60	56	53
	60	77	77	77	77	77	77	77	75	68	64	60	56	53
	70	72	72	72	72	72	72	72	72	68	64	60	56	53
	80	67	67	67	67	67	67	67	67	67	64	60	56	53
	90	64	64	64	64	64	64	64	64	64	64	60	56	53
Zones 2e & 3	0	107	102	98	94	88	83	79	71	66	61	57	54	51
	10	107	102	98	94	88	83	79	71	66	61	57	54	51
	20	104	102	98	94	88	83	79	71	66	61	57	54	51
	30	104	102	98	94	88	83	79	71	66	61	57	54	51
	40	92	92	92	92	88	83	79	71	66	61	57	54	51
	50	83	83	83	83	83	83	79	71	66	61	57	54	51
	60	77	77	77	77	77	77	77	71	66	61	57	54	51
	70	72	72	72	72	72	72	72	71	66	61	57	54	51
	80	67	67	67	67	67	67	67	67	66	61	57	54	51
	90	64	64	64	64	64	64	64	64	64	61	57	54	51

Notes:

1. Tables are based on critical rail span for load combinations as specified in chapter 2 of the ASCE 7-16 and allowable design loads per the 2015 Aluminum Design Manual.
2. Panels are assumed to be in landscape orientation with a maximum width of 42"

Structural ENGINUITY INC
Ingenuity in Engineering

SUNMODO®

Max Rail Spans for SunModo SMR200 Rail System

Table 112a

Mean Roof Height: h ≤ 15 ft
Roof Angle: 7 < θ ≤ 20 degrees
Exposure Category: B
Panel Orientation: Landscape
North/South Support Y_E = 1
Roof Type : Hip h/B = ≤ 0.5

Roof Wind Zone	Ground Snow Load (psf)	Wind Speed (mph)												
		90	95	100	105	110	115	120	130	140	150	160	170	180
Zone 1	0	139	139	139	139	139	139	139	139	139	137	130	123	117
	10	132	132	132	131	130	129	128	126	124	122	120	118	116
	20	104	104	104	104	104	104	104	104	104	104	103	102	100
	30	104	104	104	104	104	104	104	104	104	104	103	102	100
	40	92	92	92	92	92	92	92	92	92	92	92	92	92
	50	83	83	83	83	83	83	83	83	83	83	83	83	83
	60	77	77	77	77	77	77	77	77	77	77	77	77	77
	70	72	72	72	72	72	72	72	72	72	72	72	72	72
	80	67	67	67	67	67	67	67	67	67	67	67	67	67
	90	64	64	64	64	64	64	64	64	64	64	64	64	64
Zone 2r	0	139	139	139	139	139	139	133	124	116	109	104	98	94
	10	132	132	132	131	130	129	128	124	116	109	104	98	94
	20	104	104	104	104	104	104	104	104	104	104	103	98	94
	30	104	104	104	104	104	104	104	104	104	104	103	98	94
	40	92	92	92	92	92	92	92	92	92	92	92	92	92
	50	83	83	83	83	83	83	83	83	83	83	83	83	83
	60	77	77	77	77	77	77	77	77	77	77	77	77	77
	70	72	72	72	72	72	72	72	72	72	72	72	72	72
	80	67	67	67	67	67	67	67	67	67	67	67	67	67
	90	64	64	64	64	64	64	64	64	64	64	64	64	64
Zones 2e & 3	0	139	139	139	139	139	139	139	139	131	123	116	111	105
	10	132	132	132	131	130	129	128	126	124	122	116	111	105
	20	104	104	104	104	104	104	104	104	104	104	103	102	100
	30	104	104	104	104	104	104	104	104	104	104	103	102	100
	40	92	92	92	92	92	92	92	92	92	92	92	92	92
	50	83	83	83	83	83	83	83	83	83	83	83	83	83
	60	77	77	77	77	77	77	77	77	77	77	77	77	77
	70	72	72	72	72	72	72	72	72	72	72	72	72	72
	80	67	67	67	67	67	67	67	67	67	67	67	67	67
	90	64	64	64	64	64	64	64	64	64	64	64	64	64

Notes:

1. Tables are based on critical rail span for load combinations as specified in chapter 2 of the ASCE 7-16 and allowable design loads per the 2015 Aluminum Design Manual.
2. Panels are assumed to be in landscape orientation with a maximum width of 42"

Structural ENGINUITY INC
Ingenuity in Engineering

SUNMODO®

Max Rail Spans for SunModo SMR200 Rail System

Table 112b

Mean Roof Height: h ≤ 15 ft
Roof Angle: 7 < θ ≤ 20 degrees
Exposure Category: B
Panel Orientation: Landscape
North/South Support γ_E = 1.5
Roof Type : Hip h/B = ≤ 0.5

Roof Wind Zone	Ground Snow Load (psf)	Wind Speed (mph)												
		90	95	100	105	110	115	120	130	140	150	160	170	180
Zone 1	0	139	139	139	139	139	139	139	130	122	115	110	104	100
	10	132	132	132	131	130	129	128	126	122	115	110	104	100
	20	104	104	104	104	104	104	104	104	104	104	103	102	100
	30	104	104	104	104	104	104	104	104	104	104	103	102	100
	40	92	92	92	92	92	92	92	92	92	92	92	92	92
	50	83	83	83	83	83	83	83	83	83	83	83	83	83
	60	77	77	77	77	77	77	77	77	77	77	77	77	77
	70	72	72	72	72	72	72	72	72	72	72	72	72	72
	80	67	67	67	67	67	67	67	67	67	67	67	67	67
	90	64	64	64	64	64	64	64	64	64	64	64	64	64
Zone 2r	0	139	137	131	125	120	116	111	104	98	91	84	78	72
	10	132	132	131	125	120	116	111	104	98	91	84	78	72
	20	104	104	104	104	104	104	104	104	98	91	84	78	72
	30	104	104	104	104	104	104	104	104	98	91	84	78	72
	40	92	92	92	92	92	92	92	92	92	91	84	78	72
	50	83	83	83	83	83	83	83	83	83	83	83	78	72
	60	77	77	77	77	77	77	77	77	77	77	77	77	72
	70	72	72	72	72	72	72	72	72	72	72	72	72	72
	80	67	67	67	67	67	67	67	67	67	67	67	67	67
	90	64	64	64	64	64	64	64	64	64	64	64	64	64
Zones 2e & 3	0	139	139	139	139	136	130	126	117	110	104	98	93	87
	10	132	132	132	131	130	129	126	117	110	104	98	93	87
	20	104	104	104	104	104	104	104	104	104	104	98	93	87
	30	104	104	104	104	104	104	104	104	104	104	98	93	87
	40	92	92	92	92	92	92	92	92	92	92	92	92	87
	50	83	83	83	83	83	83	83	83	83	83	83	83	83
	60	77	77	77	77	77	77	77	77	77	77	77	77	77
	70	72	72	72	72	72	72	72	72	72	72	72	72	72
	80	67	67	67	67	67	67	67	67	67	67	67	67	67
	90	64	64	64	64	64	64	64	64	64	64	64	64	64

Notes:

1. Tables are based on critical rail span for load combinations as specified in chapter 2 of the ASCE 7-16 and allowable design loads per the 2015 Aluminum Design Manual.
2. Panels are assumed to be in landscape orientation with a maximum width of 42"

Structural ENGINUITY INC
Ingenuity in Engineering

SUNMODO®

Max Rail Spans for SunModo SMR200 Rail System

Table 113a

Mean Roof Height: h ≤ 15 ft
Roof Angle: 7 < θ ≤ 20 degrees
Exposure Category: C
Panel Orientation: Landscape
North/South Support Y_E = 1
Roof Type : Hip h/B = ≤ 0.5

Roof Wind Zone	Ground Snow Load (psf)	Wind Speed (mph)												
		90	95	100	105	110	115	120	130	140	150	160	170	180
Zone 1	0	139	139	139	139	139	139	139	130	122	116	110	105	100
	10	130	129	128	127	125	124	123	121	118	116	110	105	100
	20	104	104	104	104	104	104	104	103	102	100	98	96	94
	30	104	104	104	104	104	104	104	103	102	100	98	96	94
	40	92	92	92	92	92	92	92	92	92	91	90	88	87
	50	83	83	83	83	83	83	83	83	83	83	83	82	81
	60	77	77	77	77	77	77	77	77	77	77	77	77	76
	70	72	72	72	72	72	72	72	72	72	72	72	72	72
	80	67	67	67	67	67	67	67	67	67	67	67	67	67
	90	64	64	64	64	64	64	64	64	64	64	64	64	64
Zone 2r	0	139	138	131	126	120	116	112	104	98	92	84	78	73
	10	130	129	128	126	120	116	112	104	98	92	84	78	73
	20	104	104	104	104	104	104	104	103	98	92	84	78	73
	30	104	104	104	104	104	104	104	103	98	92	84	78	73
	40	92	92	92	92	92	92	92	92	92	91	84	78	73
	50	83	83	83	83	83	83	83	83	83	83	83	78	73
	60	77	77	77	77	77	77	77	77	77	77	77	77	73
	70	72	72	72	72	72	72	72	72	72	72	72	72	72
	80	67	67	67	67	67	67	67	67	67	67	67	67	67
	90	64	64	64	64	64	64	64	64	64	64	64	64	64
Zones 2e & 3	0	139	139	139	139	136	131	126	117	110	104	98	93	87
	10	130	129	128	127	125	124	123	117	110	104	98	93	87
	20	104	104	104	104	104	104	104	103	102	100	98	93	87
	30	104	104	104	104	104	104	104	103	102	100	98	93	87
	40	92	92	92	92	92	92	92	92	92	91	90	88	87
	50	83	83	83	83	83	83	83	83	83	83	83	82	81
	60	77	77	77	77	77	77	77	77	77	77	77	77	76
	70	72	72	72	72	72	72	72	72	72	72	72	72	72
	80	67	67	67	67	67	67	67	67	67	67	67	67	67
	90	64	64	64	64	64	64	64	64	64	64	64	64	64

Notes:

1. Tables are based on critical rail span for load combinations as specified in chapter 2 of the ASCE 7-16 and allowable design loads per the 2015 Aluminum Design Manual.
2. Panels are assumed to be in landscape orientation with a maximum width of 42"

Structural ENGINUITY INC
Ingenuity in Engineering

SUNMODO®

Max Rail Spans for SunModo SMR200 Rail System

Table 113b

Mean Roof Height: h ≤ 15 ft
Roof Angle: 7 < θ ≤ 20 degrees
Exposure Category: C
Panel Orientation: Landscape
North/South Support γ_E = 1.5
Roof Type : Hip h/B = ≤ 0.5

Roof Wind Zone	Ground Snow Load (psf)	Wind Speed (mph)												
		90	95	100	105	110	115	120	130	140	150	160	170	180
Zone 1	0	139	139	137	132	126	122	118	110	104	98	93	87	81
	10	130	129	128	127	125	122	118	110	104	98	93	87	81
	20	104	104	104	104	104	104	104	103	102	98	93	87	81
	30	104	104	104	104	104	104	104	103	102	98	93	87	81
	40	92	92	92	92	92	92	92	92	92	91	90	87	81
	50	83	83	83	83	83	83	83	83	83	83	83	82	81
	60	77	77	77	77	77	77	77	77	77	77	77	77	76
	70	72	72	72	72	72	72	72	72	72	72	72	72	72
	80	67	67	67	67	67	67	67	67	67	67	67	67	67
	90	64	64	64	64	64	64	64	64	64	64	64	64	64
Zone 2r	0	120	115	110	105	101	97	94	85	77	71	66	62	58
	10	120	115	110	105	101	97	94	85	77	71	66	62	58
	20	104	104	104	104	101	97	94	85	77	71	66	62	58
	30	104	104	104	104	101	97	94	85	77	71	66	62	58
	40	92	92	92	92	92	92	92	85	77	71	66	62	58
	50	83	83	83	83	83	83	83	83	77	71	66	62	58
	60	77	77	77	77	77	77	77	77	77	71	66	62	58
	70	72	72	72	72	72	72	72	72	72	71	66	62	58
	80	67	67	67	67	67	67	67	67	67	67	66	62	58
	90	64	64	64	64	64	64	64	64	64	64	64	62	58
Zones 2e & 3	0	136	129	124	118	114	109	106	99	92	85	78	72	67
	10	130	129	124	118	114	109	106	99	92	85	78	72	67
	20	104	104	104	104	104	104	104	99	92	85	78	72	67
	30	104	104	104	104	104	104	104	99	92	85	78	72	67
	40	92	92	92	92	92	92	92	92	92	85	78	72	67
	50	83	83	83	83	83	83	83	83	83	83	78	72	67
	60	77	77	77	77	77	77	77	77	77	77	77	72	67
	70	72	72	72	72	72	72	72	72	72	72	72	72	67
	80	67	67	67	67	67	67	67	67	67	67	67	67	67
	90	64	64	64	64	64	64	64	64	64	64	64	64	64

Notes:

1. Tables are based on critical rail span for load combinations as specified in chapter 2 of the ASCE 7-16 and allowable design loads per the 2015 Aluminum Design Manual.
2. Panels are assumed to be in landscape orientation with a maximum width of 42"

Structural ENGINUITY INC
Ingenuity in Engineering

SUNMODO®

Max Rail Spans for SunModo SMR200 Rail System

Table 114a

Mean Roof Height: h ≤ 15 ft
Roof Angle: 7 < θ ≤ 20 degrees
Exposure Category: D
Panel Orientation: Landscape
North/South Support γ_E = 1
Roof Type : Hip h/B = ≤ 0.5

Roof Wind Zone	Ground Snow Load (psf)	Wind Speed (mph)												
		90	95	100	105	110	115	120	130	140	150	160	170	180
Zone 1	0	139	139	139	139	139	133	129	120	113	107	102	97	92
	10	128	127	125	124	123	121	120	117	113	107	102	97	92
	20	104	104	104	104	104	104	103	101	99	97	95	93	90
	30	104	104	104	104	104	104	103	101	99	97	95	93	90
	40	92	92	92	92	92	92	92	92	91	89	87	86	84
	50	83	83	83	83	83	83	83	83	83	83	81	80	78
	60	77	77	77	77	77	77	77	77	77	77	76	75	74
	70	72	72	72	72	72	72	72	72	72	72	72	71	70
	80	67	67	67	67	67	67	67	67	67	67	67	67	67
	90	64	64	64	64	64	64	64	64	64	64	64	64	64
Zone 2r	0	132	126	120	115	111	107	103	96	89	81	75	69	65
	10	128	126	120	115	111	107	103	96	89	81	75	69	65
	20	104	104	104	104	104	104	103	96	89	81	75	69	65
	30	104	104	104	104	104	104	103	96	89	81	75	69	65
	40	92	92	92	92	92	92	92	92	89	81	75	69	65
	50	83	83	83	83	83	83	83	83	83	81	75	69	65
	60	77	77	77	77	77	77	77	77	77	77	75	69	65
	70	72	72	72	72	72	72	72	72	72	72	72	69	65
	80	67	67	67	67	67	67	67	67	67	67	67	67	65
	90	64	64	64	64	64	64	64	64	64	64	64	64	64
Zones 2e & 3	0	139	139	136	130	125	120	116	108	102	96	89	83	77
	10	128	127	125	124	123	120	116	108	102	96	89	83	77
	20	104	104	104	104	104	104	103	101	99	96	89	83	77
	30	104	104	104	104	104	104	103	101	99	96	89	83	77
	40	92	92	92	92	92	92	92	92	91	89	87	83	77
	50	83	83	83	83	83	83	83	83	83	83	81	80	77
	60	77	77	77	77	77	77	77	77	77	77	76	75	74
	70	72	72	72	72	72	72	72	72	72	72	72	71	70
	80	67	67	67	67	67	67	67	67	67	67	67	67	67
	90	64	64	64	64	64	64	64	64	64	64	64	64	64

Notes:

1. Tables are based on critical rail span for load combinations as specified in chapter 2 of the ASCE 7-16 and allowable design loads per the 2015 Aluminum Design Manual.
2. Panels are assumed to be in landscape orientation with a maximum width of 42"

Structural ENGINUITY INC
Ingenuity in Engineering

SUNMODO®

Max Rail Spans for SunModo SMR200 Rail System

Table 114b

Mean Roof Height: h ≤ 15 ft
Roof Angle: 7 < θ ≤ 20 degrees
Exposure Category: D
Panel Orientation: Landscape
North/South Support γ_E = 1.5
Roof Type : Hip h/B = ≤ 0.5

Roof Wind Zone	Ground Snow Load (psf)	Wind Speed (mph)												
		90	95	100	105	110	115	120	130	140	150	160	170	180
Zone 1	0	139	132	126	121	117	113	109	102	96	90	83	78	73
	10	128	127	125	121	117	113	109	102	96	90	83	78	73
	20	104	104	104	104	104	104	103	101	96	90	83	78	73
	30	104	104	104	104	104	104	103	101	96	90	83	78	73
	40	92	92	92	92	92	92	92	92	91	89	83	78	73
	50	83	83	83	83	83	83	83	83	83	83	81	78	73
	60	77	77	77	77	77	77	77	77	77	77	76	75	73
	70	72	72	72	72	72	72	72	72	72	72	72	71	70
	80	67	67	67	67	67	67	67	67	67	67	67	67	67
	90	64	64	64	64	64	64	64	64	64	64	64	64	64
Zone 2r	0	111	106	101	97	93	88	83	75	68	64	60	56	53
	10	111	106	101	97	93	88	83	75	68	64	60	56	53
	20	104	104	101	97	93	88	83	75	68	64	60	56	53
	30	104	104	101	97	93	88	83	75	68	64	60	56	53
	40	92	92	92	92	92	88	83	75	68	64	60	56	53
	50	83	83	83	83	83	83	83	75	68	64	60	56	53
	60	77	77	77	77	77	77	77	75	68	64	60	56	53
	70	72	72	72	72	72	72	72	72	68	64	60	56	53
	80	67	67	67	67	67	67	67	67	67	64	60	56	53
	90	64	64	64	64	64	64	64	64	64	64	60	56	53
Zones 2e & 3	0	125	119	114	109	105	101	98	90	82	75	69	65	61
	10	125	119	114	109	105	101	98	90	82	75	69	65	61
	20	104	104	104	104	104	101	98	90	82	75	69	65	61
	30	104	104	104	104	104	101	98	90	82	75	69	65	61
	40	92	92	92	92	92	92	92	90	82	75	69	65	61
	50	83	83	83	83	83	83	83	83	82	75	69	65	61
	60	77	77	77	77	77	77	77	77	77	75	69	65	61
	70	72	72	72	72	72	72	72	72	72	72	69	65	61
	80	67	67	67	67	67	67	67	67	67	67	67	65	61
	90	64	64	64	64	64	64	64	64	64	64	64	64	61

Notes:

1. Tables are based on critical rail span for load combinations as specified in chapter 2 of the ASCE 7-16 and allowable design loads per the 2015 Aluminum Design Manual.
2. Panels are assumed to be in landscape orientation with a maximum width of 42"

Structural ENGINUITY INC
Ingenuity in Engineering

SUNMODO®

Max Rail Spans for SunModo SMR200 Rail System

Table 115a

Mean Roof Height: h ≤ 15 ft
Roof Angle: 20 < θ ≤ 27 degrees
Exposure Category: B
Panel Orientation: Landscape
North/South Support Y_E = 1
Roof Type : Hip

Roof Wind Zone	Ground Snow Load (psf)	Wind Speed (mph)												
		90	95	100	105	110	115	120	130	140	150	160	170	180
Zone 1	0	139	139	139	139	139	139	139	139	139	139	132	125	119
	10	139	139	139	139	139	139	139	139	138	135	132	125	119
	20	123	123	123	123	123	123	123	123	122	121	119	117	115
	30	105	105	105	105	105	105	105	105	105	105	105	103	102
	40	93	93	93	93	93	93	93	93	93	93	93	93	93
	50	84	84	84	84	84	84	84	84	84	84	84	84	84
	60	78	78	78	78	78	78	78	78	78	78	78	78	78
	70	72	72	72	72	72	72	72	72	72	72	72	72	72
	80	68	68	68	68	68	68	68	68	68	68	68	68	68
	90	64	64	64	64	64	64	64	64	64	64	64	64	64
Zones 2e, 2r, & 3	0	139	139	139	139	139	139	139	135	126	119	112	106	101
	10	139	139	139	139	139	139	139	135	126	119	112	106	101
	20	123	123	123	123	123	123	123	123	122	119	112	106	101
	30	105	105	105	105	105	105	105	105	105	105	105	103	101
	40	93	93	93	93	93	93	93	93	93	93	93	93	93
	50	84	84	84	84	84	84	84	84	84	84	84	84	84
	60	78	78	78	78	78	78	78	78	78	78	78	78	78
	70	72	72	72	72	72	72	72	72	72	72	72	72	72
	80	68	68	68	68	68	68	68	68	68	68	68	68	68
	90	64	64	64	64	64	64	64	64	64	64	64	64	64

Notes:

1. Tables are based on critical rail span for load combinations as specified in chapter 2 of the ASCE 7-16 and allowable design loads per the 2015 Aluminum Design Manual.
2. Panels are assumed to be in landscape orientation with a maximum width of 42"

Structural ENGINUITY INC
Ingenuity in Engineering

SUNMODO®

Max Rail Spans for SunModo SMR200 Rail System

Table 115b

Mean Roof Height: h ≤ 15 ft
Roof Angle: 20 < θ ≤ 27 degrees
Exposure Category: B
Panel Orientation: Landscape
North/South Support γ_E = 1.5
Roof Type : Hip

Roof Wind Zone	Ground Snow Load (psf)	Wind Speed (mph)												
		90	95	100	105	110	115	120	130	140	150	160	170	180
Zone 1	0	139	139	139	139	139	139	139	133	124	117	110	105	100
	10	139	139	139	139	139	139	139	133	124	117	110	105	100
	20	123	123	123	123	123	123	123	123	122	117	110	105	100
	30	105	105	105	105	105	105	105	105	105	105	105	103	100
	40	93	93	93	93	93	93	93	93	93	93	93	93	93
	50	84	84	84	84	84	84	84	84	84	84	84	84	84
	60	78	78	78	78	78	78	78	78	78	78	78	78	78
	70	72	72	72	72	72	72	72	72	72	72	72	72	72
	80	68	68	68	68	68	68	68	68	68	68	68	68	68
	90	64	64	64	64	64	64	64	64	64	64	64	64	64
Zones 2e, 2r, & 3	0	139	139	139	136	131	125	121	113	106	100	94	87	81
	10	139	139	139	136	131	125	121	113	106	100	94	87	81
	20	123	123	123	123	123	123	121	113	106	100	94	87	81
	30	105	105	105	105	105	105	105	105	105	100	94	87	81
	40	93	93	93	93	93	93	93	93	93	93	93	87	81
	50	84	84	84	84	84	84	84	84	84	84	84	84	81
	60	78	78	78	78	78	78	78	78	78	78	78	78	78
	70	72	72	72	72	72	72	72	72	72	72	72	72	72
	80	68	68	68	68	68	68	68	68	68	68	68	68	68
	90	64	64	64	64	64	64	64	64	64	64	64	64	64

Notes:

1. Tables are based on critical rail span for load combinations as specified in chapter 2 of the ASCE 7-16 and allowable design loads per the 2015 Aluminum Design Manual.
2. Panels are assumed to be in landscape orientation with a maximum width of 42"

Structural ENGINUITY INC
Ingenuity in Engineering

SUNMODO®

Max Rail Spans for SunModo SMR200 Rail System

Table 116a

Mean Roof Height: h ≤ 15 ft
Roof Angle: 20 < θ ≤ 27 degrees
Exposure Category: C
Panel Orientation: Landscape
North/South Support $Y_E = 1$
Roof Type : Hip

Roof Wind Zone	Ground Snow Load (psf)	Wind Speed (mph)												
		90	95	100	105	110	115	120	130	140	150	160	170	180
Zone 1	0	139	139	139	139	139	139	139	133	124	117	110	105	100
	10	139	139	139	139	139	138	136	133	124	117	110	105	100
	20	123	123	123	123	123	122	121	119	117	114	110	105	100
	30	105	105	105	105	105	105	105	105	103	101	100	98	96
	40	93	93	93	93	93	93	93	93	93	92	91	89	88
	50	84	84	84	84	84	84	84	84	84	84	84	83	82
	60	78	78	78	78	78	78	78	78	78	78	78	78	77
	70	72	72	72	72	72	72	72	72	72	72	72	72	72
	80	68	68	68	68	68	68	68	68	68	68	68	68	68
	90	64	64	64	64	64	64	64	64	64	64	64	64	64
Zones 2e, 2r, & 3	0	139	139	139	137	131	126	121	113	106	100	95	87	81
	10	139	139	139	137	131	126	121	113	106	100	95	87	81
	20	123	123	123	123	123	122	121	113	106	100	95	87	81
	30	105	105	105	105	105	105	105	105	103	100	95	87	81
	40	93	93	93	93	93	93	93	93	93	92	91	87	81
	50	84	84	84	84	84	84	84	84	84	84	84	83	81
	60	78	78	78	78	78	78	78	78	78	78	78	78	77
	70	72	72	72	72	72	72	72	72	72	72	72	72	72
	80	68	68	68	68	68	68	68	68	68	68	68	68	68
	90	64	64	64	64	64	64	64	64	64	64	64	64	64

Notes:

1. Tables are based on critical rail span for load combinations as specified in chapter 2 of the ASCE 7-16 and allowable design loads per the 2015 Aluminum Design Manual.
2. Panels are assumed to be in landscape orientation with a maximum width of 42"

Structural ENGINUITY INC
Ingenuity in Engineering

SUNMODO®

Max Rail Spans for SunModo SMR200 Rail System

Table 116b

Mean Roof Height: h ≤ 15 ft
Roof Angle: 20 < θ ≤ 27 degrees
Exposure Category: C
Panel Orientation: Landscape
North/South Support γ_E = 1.5
Roof Type : Hip

Roof Wind Zone	Ground Snow Load (psf)	Wind Speed (mph)												
		90	95	100	105	110	115	120	130	140	150	160	170	180
Zone 1	0	139	139	139	135	129	124	119	111	104	98	92	85	79
	10	139	139	139	135	129	124	119	111	104	98	92	85	79
	20	123	123	123	123	123	122	119	111	104	98	92	85	79
	30	105	105	105	105	105	105	105	105	103	98	92	85	79
	40	93	93	93	93	93	93	93	93	93	92	91	85	79
	50	84	84	84	84	84	84	84	84	84	84	84	83	79
	60	78	78	78	78	78	78	78	78	78	78	78	78	77
	70	72	72	72	72	72	72	72	72	72	72	72	72	72
	80	68	68	68	68	68	68	68	68	68	68	68	68	68
	90	64	64	64	64	64	64	64	64	64	64	64	64	64
Zones 2e, 2r, & 3	0	131	124	119	114	109	105	102	95	86	79	73	68	64
	10	131	124	119	114	109	105	102	95	86	79	73	68	64
	20	123	123	119	114	109	105	102	95	86	79	73	68	64
	30	105	105	105	105	105	105	102	95	86	79	73	68	64
	40	93	93	93	93	93	93	93	93	86	79	73	68	64
	50	84	84	84	84	84	84	84	84	84	79	73	68	64
	60	78	78	78	78	78	78	78	78	78	78	73	68	64
	70	72	72	72	72	72	72	72	72	72	72	72	68	64
	80	68	68	68	68	68	68	68	68	68	68	68	68	64
	90	64	64	64	64	64	64	64	64	64	64	64	64	64

Notes:

1. Tables are based on critical rail span for load combinations as specified in chapter 2 of the ASCE 7-16 and allowable design loads per the 2015 Aluminum Design Manual.
2. Panels are assumed to be in landscape orientation with a maximum width of 42"

Structural ENGINUITY INC
Ingenuity in Engineering

SUNMODO®

Max Rail Spans for SunModo SMR200 Rail System

Table 117a

Mean Roof Height: h ≤ 15 ft
Roof Angle: 20 < θ ≤ 27 degrees
Exposure Category: D

Panel Orientation: Landscape
North/South Support Y_E = 1
Roof Type : Hip

Roof Wind Zone	Ground Snow Load (psf)	Wind Speed (mph)												
		90	95	100	105	110	115	120	130	140	150	160	170	180
Zone 1	0	139	139	139	139	139	137	131	122	114	108	102	97	91
	10	139	139	139	137	136	134	131	122	114	108	102	97	91
	20	123	123	123	122	121	120	118	116	113	108	102	97	91
	30	105	105	105	105	105	105	105	103	101	99	97	94	91
	40	93	93	93	93	93	93	93	93	92	90	88	87	85
	50	84	84	84	84	84	84	84	84	84	84	82	81	79
	60	78	78	78	78	78	78	78	78	78	78	77	76	75
	70	72	72	72	72	72	72	72	72	72	72	72	72	71
	80	68	68	68	68	68	68	68	68	68	68	68	68	68
	90	64	64	64	64	64	64	64	64	64	64	64	64	64
Zones 2e, 2r, & 3	0	139	137	131	125	120	115	111	104	98	91	84	77	72
	10	139	137	131	125	120	115	111	104	98	91	84	77	72
	20	123	123	123	122	120	115	111	104	98	91	84	77	72
	30	105	105	105	105	105	105	105	103	98	91	84	77	72
	40	93	93	93	93	93	93	93	93	92	90	84	77	72
	50	84	84	84	84	84	84	84	84	84	84	82	77	72
	60	78	78	78	78	78	78	78	78	78	78	77	76	72
	70	72	72	72	72	72	72	72	72	72	72	72	72	71
	80	68	68	68	68	68	68	68	68	68	68	68	68	68
	90	64	64	64	64	64	64	64	64	64	64	64	64	64

Notes:

1. Tables are based on critical rail span for load combinations as specified in chapter 2 of the ASCE 7-16 and allowable design loads per the 2015 Aluminum Design Manual.
2. Panels are assumed to be in landscape orientation with a maximum width of 42"

Structural ENGINUITY INC
Ingenuity in Engineering

SUNMODO®

Max Rail Spans for SunModo SMR200 Rail System

Table 117b

Mean Roof Height: h ≤ 15 ft
Roof Angle: 20 < θ ≤ 27 degrees
Exposure Category: D
Panel Orientation: Landscape
North/South Support γ_E = 1.5
Roof Type : Hip

Roof Wind Zone	Ground Snow Load (psf)	Wind Speed (mph)												
		90	95	100	105	110	115	120	130	140	150	160	170	180
Zone 1	0	139	135	129	123	118	114	109	102	96	88	81	75	70
	10	139	135	129	123	118	114	109	102	96	88	81	75	70
	20	123	123	123	122	118	114	109	102	96	88	81	75	70
	30	105	105	105	105	105	105	105	102	96	88	81	75	70
	40	93	93	93	93	93	93	93	93	92	88	81	75	70
	50	84	84	84	84	84	84	84	84	84	84	81	75	70
	60	78	78	78	78	78	78	78	78	78	78	77	75	70
	70	72	72	72	72	72	72	72	72	72	72	72	72	70
	80	68	68	68	68	68	68	68	68	68	68	68	68	68
	90	64	64	64	64	64	64	64	64	64	64	64	64	64
Zones 2e, 2r, & 3	0	120	114	109	105	101	97	93	84	76	70	65	61	58
	10	120	114	109	105	101	97	93	84	76	70	65	61	58
	20	120	114	109	105	101	97	93	84	76	70	65	61	58
	30	105	105	105	105	101	97	93	84	76	70	65	61	58
	40	93	93	93	93	93	93	93	84	76	70	65	61	58
	50	84	84	84	84	84	84	84	84	76	70	65	61	58
	60	78	78	78	78	78	78	78	78	76	70	65	61	58
	70	72	72	72	72	72	72	72	72	72	70	65	61	58
	80	68	68	68	68	68	68	68	68	68	68	65	61	58
	90	64	64	64	64	64	64	64	64	64	64	64	61	58

Notes:

1. Tables are based on critical rail span for load combinations as specified in chapter 2 of the ASCE 7-16 and allowable design loads per the 2015 Aluminum Design Manual.
2. Panels are assumed to be in landscape orientation with a maximum width of 42"

Structural ENGINUITY INC
Ingenuity in Engineering

SUNMODO®

Max Rail Spans for SunModo SMR200 Rail System

Table 118a

Mean Roof Height: h ≤ 15 ft
Roof Angle: 27 < θ ≤ 45 degrees
Exposure Category: B
Panel Orientation: Landscape
North/South Support $Y_E = 1$
Roof Type : Hip

Roof Wind Zone	Ground Snow Load (psf)	Wind Speed (mph)												
		90	95	100	105	110	115	120	130	140	150	160	170	180
Zone 1	0	139	139	139	139	139	139	139	139	139	133	126	119	113
	10	139	139	139	139	139	139	139	139	139	133	126	119	113
	20	127	127	127	127	127	127	127	127	127	125	123	119	113
	30	110	110	110	110	110	110	110	110	110	110	110	108	106
	40	98	98	98	98	98	98	98	98	98	98	98	98	97
	50	89	89	89	89	89	89	89	89	89	89	89	89	89
	60	82	82	82	82	82	82	82	82	82	82	82	82	82
	70	77	77	77	77	77	77	77	77	77	77	77	77	77
	80	72	72	72	72	72	72	72	72	72	72	72	72	72
	90	68	68	68	68	68	68	68	68	68	68	68	68	68
Zone 2e	0	139	139	139	139	139	139	139	139	138	129	121	114	108
	10	139	139	139	139	139	139	139	139	138	129	121	114	108
	20	127	127	127	127	127	127	127	127	127	125	121	114	108
	30	110	110	110	110	110	110	110	110	110	110	110	108	106
	40	98	98	98	98	98	98	98	98	98	98	98	98	97
	50	89	89	89	89	89	89	89	89	89	89	89	89	89
	60	82	82	82	82	82	82	82	82	82	82	82	82	82
	70	77	77	77	77	77	77	77	77	77	77	77	77	77
	80	72	72	72	72	72	72	72	72	72	72	72	72	72
	90	68	68	68	68	68	68	68	68	68	68	68	68	68
Zone 2r	0	139	139	139	139	139	139	138	128	120	113	107	101	96
	10	139	139	139	139	139	139	138	128	120	113	107	101	96
	20	127	127	127	127	127	127	127	127	120	113	107	101	96
	30	110	110	110	110	110	110	110	110	110	110	107	101	96
	40	98	98	98	98	98	98	98	98	98	98	98	98	96
	50	89	89	89	89	89	89	89	89	89	89	89	89	89
	60	82	82	82	82	82	82	82	82	82	82	82	82	82
	70	77	77	77	77	77	77	77	77	77	77	77	77	77
	80	72	72	72	72	72	72	72	72	72	72	72	72	72
	90	68	68	68	68	68	68	68	68	68	68	68	68	68
Zone 3	0	139	139	139	139	139	139	139	130	121	113	106	100	94
	10	139	139	139	139	139	139	139	130	121	113	106	100	94
	20	127	127	127	127	127	127	127	127	121	113	106	100	94
	30	110	110	110	110	110	110	110	110	110	110	106	100	94
	40	98	98	98	98	98	98	98	98	98	98	98	98	94
	50	89	89	89	89	89	89	89	89	89	89	89	89	89
	60	82	82	82	82	82	82	82	82	82	82	82	82	82
	70	77	77	77	77	77	77	77	77	77	77	77	77	77
	80	72	72	72	72	72	72	72	72	72	72	72	72	72
	90	68	68	68	68	68	68	68	68	68	68	68	68	68

Notes:

1. Tables are based on critical rail span for load combinations as specified in chapter 2 of the ASCE 7-16 and allowable design loads per the 2015 Aluminum Design Manual.
2. Panels are assumed to be in landscape orientation with a maximum width of 42"

Structural ENGINUITY INC
Ingenuity in Engineering

SUNMODO®

Max Rail Spans for SunModo SMR200 Rail System

Table 118b

Mean Roof Height: h ≤ 15 ft
Roof Angle: 27 < θ ≤ 45 degrees
Exposure Category: B
Panel Orientation: Landscape
North/South Support Y_E = 1.5
Roof Type : Hip

Roof Wind Zone	Ground Snow Load (psf)	Wind Speed (mph)												
		90	95	100	105	110	115	120	130	140	150	160	170	180
Zone 1	0	139	139	139	139	139	139	136	126	118	112	106	100	95
	10	139	139	139	139	139	139	136	126	118	112	106	100	95
	20	127	127	127	127	127	127	127	126	118	112	106	100	95
	30	110	110	110	110	110	110	110	110	110	110	106	100	95
	40	98	98	98	98	98	98	98	98	98	98	98	98	95
	50	89	89	89	89	89	89	89	89	89	89	89	89	89
	60	82	82	82	82	82	82	82	82	82	82	82	82	82
	70	77	77	77	77	77	77	77	77	77	77	77	77	77
	80	72	72	72	72	72	72	72	72	72	72	72	72	72
	90	68	68	68	68	68	68	68	68	68	68	68	68	68
Zone 2e	0	139	139	139	139	139	137	131	121	113	106	100	94	86
	10	139	139	139	139	139	137	131	121	113	106	100	94	86
	20	127	127	127	127	127	127	127	121	113	106	100	94	86
	30	110	110	110	110	110	110	110	110	110	106	100	94	86
	40	98	98	98	98	98	98	98	98	98	98	98	94	86
	50	89	89	89	89	89	89	89	89	89	89	89	89	86
	60	82	82	82	82	82	82	82	82	82	82	82	82	82
	70	77	77	77	77	77	77	77	77	77	77	77	77	77
	80	72	72	72	72	72	72	72	72	72	72	72	72	72
	90	68	68	68	68	68	68	68	68	68	68	68	68	68
Zone 2r	0	139	139	136	130	124	119	115	107	100	93	86	79	73
	10	139	139	136	130	124	119	115	107	100	93	86	79	73
	20	127	127	127	127	124	119	115	107	100	93	86	79	73
	30	110	110	110	110	110	110	110	107	100	93	86	79	73
	40	98	98	98	98	98	98	98	98	98	93	86	79	73
	50	89	89	89	89	89	89	89	89	89	89	86	79	73
	60	82	82	82	82	82	82	82	82	82	82	82	79	73
	70	77	77	77	77	77	77	77	77	77	77	77	77	73
	80	72	72	72	72	72	72	72	72	72	72	72	72	72
	90	68	68	68	68	68	68	68	68	68	68	68	68	68
Zone 3	0	139	139	138	131	125	120	115	107	99	91	83	76	70
	10	139	139	138	131	125	120	115	107	99	91	83	76	70
	20	127	127	127	127	125	120	115	107	99	91	83	76	70
	30	110	110	110	110	110	110	110	107	99	91	83	76	70
	40	98	98	98	98	98	98	98	98	98	91	83	76	70
	50	89	89	89	89	89	89	89	89	89	89	83	76	70
	60	82	82	82	82	82	82	82	82	82	82	82	76	70
	70	77	77	77	77	77	77	77	77	77	77	77	76	70
	80	72	72	72	72	72	72	72	72	72	72	72	72	70
	90	68	68	68	68	68	68	68	68	68	68	68	68	68

Notes:

1. Tables are based on critical rail span for load combinations as specified in chapter 2 of the ASCE 7-16 and allowable design loads per the 2015 Aluminum Design Manual.
2. Panels are assumed to be in landscape orientation with a maximum width of 42"

Structural ENGINUITY INC
Ingenuity in Engineering

SUNMODO®

Max Rail Spans for SunModo SMR200 Rail System

Table 119a

Mean Roof Height: h ≤ 15 ft
Roof Angle: 27 < θ ≤ 45 degrees
Exposure Category: C
Panel Orientation: Landscape
North/South Support Y_E = 1
Roof Type : Hip

Roof Wind Zone	Ground Snow Load (psf)	Wind Speed (mph)												
		90	95	100	105	110	115	120	130	140	150	160	170	180
Zone 1	0	139	139	139	139	139	139	136	127	119	112	106	101	95
	10	139	139	139	139	139	139	136	127	119	112	106	101	95
	20	127	127	127	127	127	127	126	123	119	112	106	101	95
	30	110	110	110	110	110	110	110	110	108	106	104	101	95
	40	98	98	98	98	98	98	98	98	98	97	95	94	92
	50	89	89	89	89	89	89	89	89	89	89	89	87	86
	60	82	82	82	82	82	82	82	82	82	82	82	82	81
	70	77	77	77	77	77	77	77	77	77	77	77	77	77
	80	72	72	72	72	72	72	72	72	72	72	72	72	72
	90	68	68	68	68	68	68	68	68	68	68	68	68	68
Zone 2e	0	139	139	139	139	139	138	132	122	114	106	100	94	87
	10	139	139	139	139	139	138	132	122	114	106	100	94	87
	20	127	127	127	127	127	127	126	122	114	106	100	94	87
	30	110	110	110	110	110	110	110	110	108	106	100	94	87
	40	98	98	98	98	98	98	98	98	98	97	95	94	87
	50	89	89	89	89	89	89	89	89	89	89	89	87	86
	60	82	82	82	82	82	82	82	82	82	82	82	82	81
	70	77	77	77	77	77	77	77	77	77	77	77	77	77
	80	72	72	72	72	72	72	72	72	72	72	72	72	72
	90	68	68	68	68	68	68	68	68	68	68	68	68	68
Zone 2r	0	139	139	136	130	125	120	115	107	101	94	86	79	74
	10	139	139	136	130	125	120	115	107	101	94	86	79	74
	20	127	127	127	127	125	120	115	107	101	94	86	79	74
	30	110	110	110	110	110	110	110	107	101	94	86	79	74
	40	98	98	98	98	98	98	98	98	98	94	86	79	74
	50	89	89	89	89	89	89	89	89	89	89	86	79	74
	60	82	82	82	82	82	82	82	82	82	82	82	79	74
	70	77	77	77	77	77	77	77	77	77	77	77	77	74
	80	72	72	72	72	72	72	72	72	72	72	72	72	72
	90	68	68	68	68	68	68	68	68	68	68	68	68	68
Zone 3	0	139	139	139	132	126	120	115	107	100	92	83	76	70
	10	139	139	139	132	126	120	115	107	100	92	83	76	70
	20	127	127	127	127	126	120	115	107	100	92	83	76	70
	30	110	110	110	110	110	110	110	107	100	92	83	76	70
	40	98	98	98	98	98	98	98	98	98	92	83	76	70
	50	89	89	89	89	89	89	89	89	89	89	83	76	70
	60	82	82	82	82	82	82	82	82	82	82	82	76	70
	70	77	77	77	77	77	77	77	77	77	77	77	76	70
	80	72	72	72	72	72	72	72	72	72	72	72	72	70
	90	68	68	68	68	68	68	68	68	68	68	68	68	68

Notes:

1. Tables are based on critical rail span for load combinations as specified in chapter 2 of the ASCE 7-16 and allowable design loads per the 2015 Aluminum Design Manual.
2. Panels are assumed to be in landscape orientation with a maximum width of 42"

Structural ENGINUITY INC
Ingenuity in Engineering

SUNMODO®

Max Rail Spans for SunModo SMR200 Rail System

Table 119b

Mean Roof Height: h ≤ 15 ft
Roof Angle: 27 < θ ≤ 45 degrees
Exposure Category: C
Panel Orientation: Landscape
North/South Support γ_E = 1.5
Roof Type : Hip

Roof Wind Zone	Ground Snow Load (psf)	Wind Speed (mph)												
		90	95	100	105	110	115	120	130	140	150	160	170	180
Zone 1	0	139	139	134	128	123	118	114	106	100	93	86	79	74
	10	139	139	134	128	123	118	114	106	100	93	86	79	74
	20	127	127	127	127	123	118	114	106	100	93	86	79	74
	30	110	110	110	110	110	110	110	106	100	93	86	79	74
	40	98	98	98	98	98	98	98	98	98	93	86	79	74
	50	89	89	89	89	89	89	89	89	89	89	86	79	74
	60	82	82	82	82	82	82	82	82	82	82	82	79	74
	70	77	77	77	77	77	77	77	77	77	77	77	77	74
	80	72	72	72	72	72	72	72	72	72	72	72	72	72
	90	68	68	68	68	68	68	68	68	68	68	68	68	68
Zone 2e	0	139	136	129	123	118	113	109	101	93	84	77	71	66
	10	139	136	129	123	118	113	109	101	93	84	77	71	66
	20	127	127	127	123	118	113	109	101	93	84	77	71	66
	30	110	110	110	110	110	110	109	101	93	84	77	71	66
	40	98	98	98	98	98	98	98	98	93	84	77	71	66
	50	89	89	89	89	89	89	89	89	89	84	77	71	66
	60	82	82	82	82	82	82	82	82	82	82	77	71	66
	70	77	77	77	77	77	77	77	77	77	77	77	71	66
	80	72	72	72	72	72	72	72	72	72	72	72	71	66
	90	68	68	68	68	68	68	68	68	68	68	68	68	66
Zone 2r	0	124	118	113	108	104	100	96	87	79	72	66	62	58
	10	124	118	113	108	104	100	96	87	79	72	66	62	58
	20	124	118	113	108	104	100	96	87	79	72	66	62	58
	30	110	110	110	108	104	100	96	87	79	72	66	62	58
	40	98	98	98	98	98	98	96	87	79	72	66	62	58
	50	89	89	89	89	89	89	89	87	79	72	66	62	58
	60	82	82	82	82	82	82	82	82	79	72	66	62	58
	70	77	77	77	77	77	77	77	77	77	72	66	62	58
	80	72	72	72	72	72	72	72	72	72	72	66	62	58
	90	68	68	68	68	68	68	68	68	68	68	66	62	58
Zone 3	0	125	119	113	108	103	99	94	84	75	68	63	59	55
	10	125	119	113	108	103	99	94	84	75	68	63	59	55
	20	125	119	113	108	103	99	94	84	75	68	63	59	55
	30	110	110	110	108	103	99	94	84	75	68	63	59	55
	40	98	98	98	98	98	98	94	84	75	68	63	59	55
	50	89	89	89	89	89	89	89	84	75	68	63	59	55
	60	82	82	82	82	82	82	82	82	75	68	63	59	55
	70	77	77	77	77	77	77	77	77	75	68	63	59	55
	80	72	72	72	72	72	72	72	72	72	68	63	59	55
	90	68	68	68	68	68	68	68	68	68	68	63	59	55

Notes:

1. Tables are based on critical rail span for load combinations as specified in chapter 2 of the ASCE 7-16 and allowable design loads per the 2015 Aluminum Design Manual.
2. Panels are assumed to be in landscape orientation with a maximum width of 42"

Structural ENGINUITY INC
Ingenuity in Engineering

SUNMODO®

Max Rail Spans for SunModo SMR200 Rail System

Table 120a

Mean Roof Height: h ≤ 15 ft
Roof Angle: 27 < θ ≤ 45 degrees
Exposure Category: D
Panel Orientation: Landscape
North/South Support $Y_E = 1$
Roof Type : Hip

Roof Wind Zone	Ground Snow Load (psf)	Wind Speed (mph)												
		90	95	100	105	110	115	120	130	140	150	160	170	180
Zone 1	0	139	139	139	139	135	130	125	116	109	103	98	91	85
	10	139	139	139	139	135	130	125	116	109	103	98	91	85
	20	127	127	127	127	125	124	123	116	109	103	98	91	85
	30	110	110	110	110	110	110	109	107	105	103	98	91	85
	40	98	98	98	98	98	98	98	98	96	95	93	91	85
	50	89	89	89	89	89	89	89	89	89	88	86	85	83
	60	82	82	82	82	82	82	82	82	82	82	81	80	79
	70	77	77	77	77	77	77	77	77	77	77	77	76	75
	80	72	72	72	72	72	72	72	72	72	72	72	72	71
	90	68	68	68	68	68	68	68	68	68	68	68	68	68
Zone 2e	0	139	139	139	137	131	125	120	111	104	98	89	82	76
	10	139	139	139	137	131	125	120	111	104	98	89	82	76
	20	127	127	127	127	125	124	120	111	104	98	89	82	76
	30	110	110	110	110	110	110	109	107	104	98	89	82	76
	40	98	98	98	98	98	98	98	98	96	95	89	82	76
	50	89	89	89	89	89	89	89	89	89	88	86	82	76
	60	82	82	82	82	82	82	82	82	82	82	81	80	76
	70	77	77	77	77	77	77	77	77	77	77	77	76	75
	80	72	72	72	72	72	72	72	72	72	72	72	72	71
	90	68	68	68	68	68	68	68	68	68	68	68	68	68
Zone 2r	0	137	131	124	119	114	110	106	99	90	83	76	70	65
	10	137	131	124	119	114	110	106	99	90	83	76	70	65
	20	127	127	124	119	114	110	106	99	90	83	76	70	65
	30	110	110	110	110	110	110	106	99	90	83	76	70	65
	40	98	98	98	98	98	98	98	98	90	83	76	70	65
	50	89	89	89	89	89	89	89	89	89	83	76	70	65
	60	82	82	82	82	82	82	82	82	82	82	76	70	65
	70	77	77	77	77	77	77	77	77	77	77	76	70	65
	80	72	72	72	72	72	72	72	72	72	72	72	70	65
	90	68	68	68	68	68	68	68	68	68	68	68	68	65
Zone 3	0	139	132	126	120	114	110	105	98	88	80	73	67	62
	10	139	132	126	120	114	110	105	98	88	80	73	67	62
	20	127	127	126	120	114	110	105	98	88	80	73	67	62
	30	110	110	110	110	110	110	105	98	88	80	73	67	62
	40	98	98	98	98	98	98	98	98	88	80	73	67	62
	50	89	89	89	89	89	89	89	89	88	80	73	67	62
	60	82	82	82	82	82	82	82	82	82	80	73	67	62
	70	77	77	77	77	77	77	77	77	77	77	73	67	62
	80	72	72	72	72	72	72	72	72	72	72	72	67	62
	90	68	68	68	68	68	68	68	68	68	68	68	67	62

Notes:

1. Tables are based on critical rail span for load combinations as specified in chapter 2 of the ASCE 7-16 and allowable design loads per the 2015 Aluminum Design Manual.
2. Panels are assumed to be in landscape orientation with a maximum width of 42"

Structural ENGINUITY INC
Ingenuity in Engineering

SUNMODO®

Max Rail Spans for SunModo SMR200 Rail System

Table 120b

Mean Roof Height: h ≤ 15 ft
Roof Angle: 27 < θ ≤ 45 degrees
Exposure Category: D
Panel Orientation: Landscape
North/South Support γ_E = 1.5
Roof Type : Hip

Roof Wind Zone	Ground Snow Load (psf)	Wind Speed (mph)												
		90	95	100	105	110	115	120	130	140	150	160	170	180
Zone 1	0	135	128	123	118	113	109	105	98	90	82	76	70	66
	10	135	128	123	118	113	109	105	98	90	82	76	70	66
	20	127	127	123	118	113	109	105	98	90	82	76	70	66
	30	110	110	110	110	110	109	105	98	90	82	76	70	66
	40	98	98	98	98	98	98	98	98	90	82	76	70	66
	50	89	89	89	89	89	89	89	89	89	82	76	70	66
	60	82	82	82	82	82	82	82	82	82	82	76	70	66
	70	77	77	77	77	77	77	77	77	77	77	76	70	66
	80	72	72	72	72	72	72	72	72	72	72	72	70	66
	90	68	68	68	68	68	68	68	68	68	68	68	68	66
Zone 2e	0	130	124	118	112	108	103	99	90	81	74	67	63	59
	10	130	124	118	112	108	103	99	90	81	74	67	63	59
	20	127	124	118	112	108	103	99	90	81	74	67	63	59
	30	110	110	110	110	108	103	99	90	81	74	67	63	59
	40	98	98	98	98	98	98	98	90	81	74	67	63	59
	50	89	89	89	89	89	89	89	89	81	74	67	63	59
	60	82	82	82	82	82	82	82	82	81	74	67	63	59
	70	77	77	77	77	77	77	77	77	77	74	67	63	59
	80	72	72	72	72	72	72	72	72	72	72	67	63	59
	90	68	68	68	68	68	68	68	68	68	68	67	63	59
Zone 2r	0	114	109	104	100	95	90	85	76	69	64	59	55	52
	10	114	109	104	100	95	90	85	76	69	64	59	55	52
	20	114	109	104	100	95	90	85	76	69	64	59	55	52
	30	110	109	104	100	95	90	85	76	69	64	59	55	52
	40	98	98	98	98	95	90	85	76	69	64	59	55	52
	50	89	89	89	89	89	89	85	76	69	64	59	55	52
	60	82	82	82	82	82	82	82	76	69	64	59	55	52
	70	77	77	77	77	77	77	77	76	69	64	59	55	52
	80	72	72	72	72	72	72	72	72	69	64	59	55	52
	90	68	68	68	68	68	68	68	68	68	64	59	55	52
Zone 3	0	114	108	103	99	93	87	82	73	66	61	56	52	49
	10	114	108	103	99	93	87	82	73	66	61	56	52	49
	20	114	108	103	99	93	87	82	73	66	61	56	52	49
	30	110	108	103	99	93	87	82	73	66	61	56	52	49
	40	98	98	98	98	93	87	82	73	66	61	56	52	49
	50	89	89	89	89	89	87	82	73	66	61	56	52	49
	60	82	82	82	82	82	82	82	73	66	61	56	52	49
	70	77	77	77	77	77	77	77	73	66	61	56	52	49
	80	72	72	72	72	72	72	72	72	66	61	56	52	49
	90	68	68	68	68	68	68	68	68	66	61	56	52	49

Notes:

1. Tables are based on critical rail span for load combinations as specified in chapter 2 of the ASCE 7-16 and allowable design loads per the 2015 Aluminum Design Manual.
2. Panels are assumed to be in landscape orientation with a maximum width of 42"

Structural ENGINUITY INC
Ingenuity in Engineering

SUNMODO®

Max Rail Spans for SunModo SMR200 Rail System

Table 121a

Mean Roof Height: 15 < h ≤ 30 ft
Roof Angle: 0 < θ ≤ 7 degrees
Exposure Category: B
Panel Orientation: Landscape
North/South Support $\gamma_E = 1$
Roof Type : Gable

Roof Wind Zone	Ground Snow Load (psf)	Wind Speed (mph)												
		90	95	100	105	110	115	120	130	140	150	160	170	180
Zone 1'	0	139	139	139	139	139	139	139	139	139	139	139	132	126
	10	132	132	132	132	132	132	132	132	132	131	130	128	126
	20	110	110	110	110	110	110	110	110	110	110	110	110	110
	30	109	109	109	109	109	109	109	109	109	109	109	109	109
	40	98	98	98	98	98	98	98	98	98	98	98	98	98
	50	89	89	89	89	89	89	89	89	89	89	89	89	89
	60	82	82	82	82	82	82	82	82	82	82	82	82	82
	70	76	76	76	76	76	76	76	76	76	76	76	76	76
	80	71	71	71	71	71	71	71	71	71	71	71	71	71
	90	68	68	68	68	68	68	68	68	68	68	68	68	68
Zone 1	0	139	139	139	139	139	139	139	131	122	115	109	104	99
	10	132	132	132	132	132	132	132	131	122	115	109	104	99
	20	110	110	110	110	110	110	110	110	110	110	109	104	99
	30	109	109	109	109	109	109	109	109	109	109	109	104	99
	40	98	98	98	98	98	98	98	98	98	98	98	98	98
	50	89	89	89	89	89	89	89	89	89	89	89	89	89
	60	82	82	82	82	82	82	82	82	82	82	82	82	82
	70	76	76	76	76	76	76	76	76	76	76	76	76	76
	80	71	71	71	71	71	71	71	71	71	71	71	71	71
	90	68	68	68	68	68	68	68	68	68	68	68	68	68
Zone 2	0	139	139	139	138	132	127	122	114	107	101	96	91	85
	10	132	132	132	132	132	127	122	114	107	101	96	91	85
	20	110	110	110	110	110	110	110	110	107	101	96	91	85
	30	109	109	109	109	109	109	109	109	107	101	96	91	85
	40	98	98	98	98	98	98	98	98	98	98	96	91	85
	50	89	89	89	89	89	89	89	89	89	89	89	89	85
	60	82	82	82	82	82	82	82	82	82	82	82	82	82
	70	76	76	76	76	76	76	76	76	76	76	76	76	76
	80	71	71	71	71	71	71	71	71	71	71	71	71	71
	90	68	68	68	68	68	68	68	68	68	68	68	68	68
Zone 3	0	139	132	126	120	116	111	107	100	94	87	80	74	69
	10	132	132	126	120	116	111	107	100	94	87	80	74	69
	20	110	110	110	110	110	110	107	100	94	87	80	74	69
	30	109	109	109	109	109	109	107	100	94	87	80	74	69
	40	98	98	98	98	98	98	98	98	94	87	80	74	69
	50	89	89	89	89	89	89	89	89	89	87	80	74	69
	60	82	82	82	82	82	82	82	82	82	82	80	74	69
	70	76	76	76	76	76	76	76	76	76	76	76	74	69
	80	71	71	71	71	71	71	71	71	71	71	71	71	69
	90	68	68	68	68	68	68	68	68	68	68	68	68	68

Notes:

1. Tables are based on critical rail span for load combinations as specified in chapter 2 of the ASCE 7-16 and allowable design loads per the 2015 Aluminum Design Manual.
2. Panels are assumed to be in landscape orientation with a maximum width of 42"

Structural ENGINUITY INC
Ingenuity in Engineering

SUNMODO®

Max Rail Spans for SunModo SMR200 Rail System

Table 121b

Mean Roof Height: 15 < h ≤ 30 ft
Roof Angle: 0 < θ ≤ 7 degrees
Exposure Category: B
Panel Orientation: Landscape
North/South Support γ_E = 1.5
Roof Type : Gable

Roof Wind Zone	Ground Snow Load (psf)	Wind Speed (mph)												
		90	95	100	105	110	115	120	130	140	150	160	170	180
Zone 1'	0	139	139	139	139	139	139	139	139	131	124	117	112	107
	10	132	132	132	132	132	132	132	132	131	124	117	112	107
	20	110	110	110	110	110	110	110	110	110	110	110	110	107
	30	109	109	109	109	109	109	109	109	109	109	109	109	107
	40	98	98	98	98	98	98	98	98	98	98	98	98	98
	50	89	89	89	89	89	89	89	89	89	89	89	89	89
	60	82	82	82	82	82	82	82	82	82	82	82	82	82
	70	76	76	76	76	76	76	76	76	76	76	76	76	76
	80	71	71	71	71	71	71	71	71	71	71	71	71	71
	90	68	68	68	68	68	68	68	68	68	68	68	68	68
Zone 1	0	139	139	138	132	126	122	117	109	103	97	92	85	79
	10	132	132	132	132	126	122	117	109	103	97	92	85	79
	20	110	110	110	110	110	110	110	109	103	97	92	85	79
	30	109	109	109	109	109	109	109	109	103	97	92	85	79
	40	98	98	98	98	98	98	98	98	98	97	92	85	79
	50	89	89	89	89	89	89	89	89	89	89	89	85	79
	60	82	82	82	82	82	82	82	82	82	82	82	82	79
	70	76	76	76	76	76	76	76	76	76	76	76	76	76
	80	71	71	71	71	71	71	71	71	71	71	71	71	71
	90	68	68	68	68	68	68	68	68	68	68	68	68	68
Zone 2	0	132	126	120	115	111	107	103	96	90	82	76	71	66
	10	132	126	120	115	111	107	103	96	90	82	76	71	66
	20	110	110	110	110	110	107	103	96	90	82	76	71	66
	30	109	109	109	109	109	107	103	96	90	82	76	71	66
	40	98	98	98	98	98	98	98	96	90	82	76	71	66
	50	89	89	89	89	89	89	89	89	89	82	76	71	66
	60	82	82	82	82	82	82	82	82	82	82	76	71	66
	70	76	76	76	76	76	76	76	76	76	76	76	71	66
	80	71	71	71	71	71	71	71	71	71	71	71	71	66
	90	68	68	68	68	68	68	68	68	68	68	68	68	66
Zone 3	0	115	110	105	101	97	94	89	81	73	67	63	59	56
	10	115	110	105	101	97	94	89	81	73	67	63	59	56
	20	110	110	105	101	97	94	89	81	73	67	63	59	56
	30	109	109	105	101	97	94	89	81	73	67	63	59	56
	40	98	98	98	98	97	94	89	81	73	67	63	59	56
	50	89	89	89	89	89	89	89	81	73	67	63	59	56
	60	82	82	82	82	82	82	82	81	73	67	63	59	56
	70	76	76	76	76	76	76	76	76	73	67	63	59	56
	80	71	71	71	71	71	71	71	71	71	67	63	59	56
	90	68	68	68	68	68	68	68	68	68	67	63	59	56

Notes:

1. Tables are based on critical rail span for load combinations as specified in chapter 2 of the ASCE 7-16 and allowable design loads per the 2015 Aluminum Design Manual.
2. Panels are assumed to be in landscape orientation with a maximum width of 42"

Structural ENGINUITY INC
Ingenuity in Engineering

SUNMODO®

Max Rail Spans for SunModo SMR200 Rail System

Table 122a

Mean Roof Height: 15 < h ≤ 30 ft
Roof Angle: 0 < θ ≤ 7 degrees
Exposure Category: C
Panel Orientation: Landscape
North/South Support $Y_E = 1$
Roof Type : Gable

Roof Wind Zone	Ground Snow Load (psf)	Wind Speed (mph)												
		90	95	100	105	110	115	120	130	140	150	160	170	180
Zone 1'	0	139	139	139	139	139	139	139	139	135	127	121	115	110
	10	132	132	132	132	132	132	132	130	129	127	121	115	110
	20	110	110	110	110	110	110	110	110	110	110	110	109	108
	30	109	109	109	109	109	109	109	109	109	109	109	108	107
	40	98	98	98	98	98	98	98	98	98	98	98	98	98
	50	89	89	89	89	89	89	89	89	89	89	89	89	89
	60	82	82	82	82	82	82	82	82	82	82	82	82	82
	70	76	76	76	76	76	76	76	76	76	76	76	76	76
	80	71	71	71	71	71	71	71	71	71	71	71	71	71
	90	68	68	68	68	68	68	68	68	68	68	68	68	68
Zone 1	0	139	139	139	136	130	125	121	113	106	100	95	89	83
	10	132	132	132	132	130	125	121	113	106	100	95	89	83
	20	110	110	110	110	110	110	110	110	106	100	95	89	83
	30	109	109	109	109	109	109	109	109	106	100	95	89	83
	40	98	98	98	98	98	98	98	98	98	98	95	89	83
	50	89	89	89	89	89	89	89	89	89	89	89	89	83
	60	82	82	82	82	82	82	82	82	82	82	82	82	82
	70	76	76	76	76	76	76	76	76	76	76	76	76	76
	80	71	71	71	71	71	71	71	71	71	71	71	71	71
	90	68	68	68	68	68	68	68	68	68	68	68	68	68
Zone 2	0	136	130	124	119	114	110	106	99	93	86	79	74	69
	10	132	130	124	119	114	110	106	99	93	86	79	74	69
	20	110	110	110	110	110	110	106	99	93	86	79	74	69
	30	109	109	109	109	109	109	106	99	93	86	79	74	69
	40	98	98	98	98	98	98	98	98	93	86	79	74	69
	50	89	89	89	89	89	89	89	89	89	86	79	74	69
	60	82	82	82	82	82	82	82	82	82	82	79	74	69
	70	76	76	76	76	76	76	76	76	76	76	76	74	69
	80	71	71	71	71	71	71	71	71	71	71	71	71	69
	90	68	68	68	68	68	68	68	68	68	68	68	68	68
Zone 3	0	119	113	109	104	100	96	93	84	77	70	65	61	58
	10	119	113	109	104	100	96	93	84	77	70	65	61	58
	20	110	110	109	104	100	96	93	84	77	70	65	61	58
	30	109	109	109	104	100	96	93	84	77	70	65	61	58
	40	98	98	98	98	98	96	93	84	77	70	65	61	58
	50	89	89	89	89	89	89	89	84	77	70	65	61	58
	60	82	82	82	82	82	82	82	82	77	70	65	61	58
	70	76	76	76	76	76	76	76	76	76	70	65	61	58
	80	71	71	71	71	71	71	71	71	71	70	65	61	58
	90	68	68	68	68	68	68	68	68	68	68	65	61	58

Notes:

1. Tables are based on critical rail span for load combinations as specified in chapter 2 of the ASCE 7-16 and allowable design loads per the 2015 Aluminum Design Manual.
2. Panels are assumed to be in landscape orientation with a maximum width of 42"

Structural ENGINUITY INC
Ingenuity in Engineering

SUNMODO®

Max Rail Spans for SunModo SMR200 Rail System

Table 122b

Mean Roof Height: 15 < h ≤ 30 ft
Roof Angle: 0 < θ ≤ 7 degrees
Exposure Category: C
Panel Orientation: Landscape
North/South Support γ_E = 1.5
Roof Type : Gable

Roof Wind Zone	Ground Snow Load (psf)	Wind Speed (mph)												
		90	95	100	105	110	115	120	130	140	150	160	170	180
Zone 1'	0	139	139	139	139	139	135	130	121	114	108	102	98	93
	10	132	132	132	132	132	132	130	121	114	108	102	98	93
	20	110	110	110	110	110	110	110	110	110	108	102	98	93
	30	109	109	109	109	109	109	109	109	109	108	102	98	93
	40	98	98	98	98	98	98	98	98	98	98	98	98	93
	50	89	89	89	89	89	89	89	89	89	89	89	89	89
	60	82	82	82	82	82	82	82	82	82	82	82	82	82
	70	76	76	76	76	76	76	76	76	76	76	76	76	76
	80	71	71	71	71	71	71	71	71	71	71	71	71	71
	90	68	68	68	68	68	68	68	68	68	68	68	68	68
Zone 1	0	130	124	119	114	109	105	102	95	88	81	74	69	65
	10	130	124	119	114	109	105	102	95	88	81	74	69	65
	20	110	110	110	110	109	105	102	95	88	81	74	69	65
	30	109	109	109	109	109	105	102	95	88	81	74	69	65
	40	98	98	98	98	98	98	98	95	88	81	74	69	65
	50	89	89	89	89	89	89	89	89	88	81	74	69	65
	60	82	82	82	82	82	82	82	82	82	81	74	69	65
	70	76	76	76	76	76	76	76	76	76	76	74	69	65
	80	71	71	71	71	71	71	71	71	71	71	71	69	65
	90	68	68	68	68	68	68	68	68	68	68	68	68	65
Zone 2	0	114	109	104	100	96	93	88	80	73	67	63	59	56
	10	114	109	104	100	96	93	88	80	73	67	63	59	56
	20	110	109	104	100	96	93	88	80	73	67	63	59	56
	30	109	109	104	100	96	93	88	80	73	67	63	59	56
	40	98	98	98	98	96	93	88	80	73	67	63	59	56
	50	89	89	89	89	89	89	88	80	73	67	63	59	56
	60	82	82	82	82	82	82	82	80	73	67	63	59	56
	70	76	76	76	76	76	76	76	76	73	67	63	59	56
	80	71	71	71	71	71	71	71	71	71	67	63	59	56
	90	68	68	68	68	68	68	68	68	68	67	63	59	56
Zone 3	0	100	96	91	85	80	76	72	66	61	57	53	50	47
	10	100	96	91	85	80	76	72	66	61	57	53	50	47
	20	100	96	91	85	80	76	72	66	61	57	53	50	47
	30	100	96	91	85	80	76	72	66	61	57	53	50	47
	40	98	96	91	85	80	76	72	66	61	57	53	50	47
	50	89	89	89	85	80	76	72	66	61	57	53	50	47
	60	82	82	82	82	80	76	72	66	61	57	53	50	47
	70	76	76	76	76	76	76	72	66	61	57	53	50	47
	80	71	71	71	71	71	71	71	66	61	57	53	50	47
	90	68	68	68	68	68	68	68	66	61	57	53	50	47

Notes:

1. Tables are based on critical rail span for load combinations as specified in chapter 2 of the ASCE 7-16 and allowable design loads per the 2015 Aluminum Design Manual.
2. Panels are assumed to be in landscape orientation with a maximum width of 42"

Structural ENGINUITY INC
Ingenuity in Engineering

SUNMODO®

Max Rail Spans for SunModo SMR200 Rail System

Table 123a

Mean Roof Height: 15 < h ≤ 30 ft
Roof Angle: 0 < θ ≤ 7 degrees
Exposure Category: D
Panel Orientation: Landscape
North/South Support $\gamma_E = 1$
Roof Type : Gable

Roof Wind Zone	Ground Snow Load (psf)	Wind Speed (mph)												
		90	95	100	105	110	115	120	130	140	150	160	170	180
Zone 1'	0	139	139	139	139	139	139	139	134	126	119	113	107	102
	10	132	132	132	132	132	131	130	129	126	119	113	107	102
	20	110	110	110	110	110	110	110	110	110	110	109	107	102
	30	109	109	109	109	109	109	109	109	109	109	108	107	102
	40	98	98	98	98	98	98	98	98	98	98	98	98	98
	50	89	89	89	89	89	89	89	89	89	89	89	89	89
	60	82	82	82	82	82	82	82	82	82	82	82	82	82
	70	76	76	76	76	76	76	76	76	76	76	76	76	76
	80	71	71	71	71	71	71	71	71	71	71	71	71	71
	90	68	68	68	68	68	68	68	68	68	68	68	68	68
Zone 1	0	139	138	132	126	121	116	112	105	99	93	86	80	75
	10	132	132	132	126	121	116	112	105	99	93	86	80	75
	20	110	110	110	110	110	110	110	105	99	93	86	80	75
	30	109	109	109	109	109	109	109	105	99	93	86	80	75
	40	98	98	98	98	98	98	98	98	98	93	86	80	75
	50	89	89	89	89	89	89	89	89	89	89	86	80	75
	60	82	82	82	82	82	82	82	82	82	82	82	80	75
	70	76	76	76	76	76	76	76	76	76	76	76	76	75
	80	71	71	71	71	71	71	71	71	71	71	71	71	71
	90	68	68	68	68	68	68	68	68	68	68	68	68	68
Zone 2	0	126	120	115	110	106	102	99	93	84	77	71	67	63
	10	126	120	115	110	106	102	99	93	84	77	71	67	63
	20	110	110	110	110	106	102	99	93	84	77	71	67	63
	30	109	109	109	109	106	102	99	93	84	77	71	67	63
	40	98	98	98	98	98	98	98	93	84	77	71	67	63
	50	89	89	89	89	89	89	89	89	84	77	71	67	63
	60	82	82	82	82	82	82	82	82	82	77	71	67	63
	70	76	76	76	76	76	76	76	76	76	76	71	67	63
	80	71	71	71	71	71	71	71	71	71	71	71	67	63
	90	68	68	68	68	68	68	68	68	68	68	68	67	63
Zone 3	0	110	106	101	97	93	89	84	76	69	64	60	56	53
	10	110	106	101	97	93	89	84	76	69	64	60	56	53
	20	110	106	101	97	93	89	84	76	69	64	60	56	53
	30	109	106	101	97	93	89	84	76	69	64	60	56	53
	40	98	98	98	97	93	89	84	76	69	64	60	56	53
	50	89	89	89	89	89	89	84	76	69	64	60	56	53
	60	82	82	82	82	82	82	82	76	69	64	60	56	53
	70	76	76	76	76	76	76	76	76	69	64	60	56	53
	80	71	71	71	71	71	71	71	71	69	64	60	56	53
	90	68	68	68	68	68	68	68	68	68	64	60	56	53

Notes:

1. Tables are based on critical rail span for load combinations as specified in chapter 2 of the ASCE 7-16 and allowable design loads per the 2015 Aluminum Design Manual.
2. Panels are assumed to be in landscape orientation with a maximum width of 42"

Structural ENGINUITY INC
Ingenuity in Engineering

SUNMODO®

Max Rail Spans for SunModo SMR200 Rail System

Table 123b

Mean Roof Height: 15 < h ≤ 30 ft
Roof Angle: 0 < θ ≤ 7 degrees
Exposure Category: D
Panel Orientation: Landscape
North/South Support γ_E = 1.5
Roof Type : Gable

Roof Wind Zone	Ground Snow Load (psf)	Wind Speed (mph)												
		90	95	100	105	110	115	120	130	140	150	160	170	180
Zone 1'	0	139	139	139	135	130	125	121	113	106	101	96	91	85
	10	132	132	132	132	130	125	121	113	106	101	96	91	85
	20	110	110	110	110	110	110	110	110	106	101	96	91	85
	30	109	109	109	109	109	109	109	109	106	101	96	91	85
	40	98	98	98	98	98	98	98	98	98	98	96	91	85
	50	89	89	89	89	89	89	89	89	89	89	89	89	85
	60	82	82	82	82	82	82	82	82	82	82	82	82	82
	70	76	76	76	76	76	76	76	76	76	76	76	76	76
	80	71	71	71	71	71	71	71	71	71	71	71	71	71
	90	68	68	68	68	68	68	68	68	68	68	68	68	68
Zone 1	0	121	115	110	106	102	98	95	87	79	73	67	63	60
	10	121	115	110	106	102	98	95	87	79	73	67	63	60
	20	110	110	110	106	102	98	95	87	79	73	67	63	60
	30	109	109	109	106	102	98	95	87	79	73	67	63	60
	40	98	98	98	98	98	98	95	87	79	73	67	63	60
	50	89	89	89	89	89	89	89	87	79	73	67	63	60
	60	82	82	82	82	82	82	82	82	79	73	67	63	60
	70	76	76	76	76	76	76	76	76	76	73	67	63	60
	80	71	71	71	71	71	71	71	71	71	71	67	63	60
	90	68	68	68	68	68	68	68	68	68	68	67	63	60
Zone 2	0	106	101	97	93	89	84	79	72	66	61	58	54	51
	10	106	101	97	93	89	84	79	72	66	61	58	54	51
	20	106	101	97	93	89	84	79	72	66	61	58	54	51
	30	106	101	97	93	89	84	79	72	66	61	58	54	51
	40	98	98	97	93	89	84	79	72	66	61	58	54	51
	50	89	89	89	89	89	84	79	72	66	61	58	54	51
	60	82	82	82	82	82	82	79	72	66	61	58	54	51
	70	76	76	76	76	76	76	76	72	66	61	58	54	51
	80	71	71	71	71	71	71	71	71	66	61	58	54	51
	90	68	68	68	68	68	68	68	68	66	61	58	54	51
Zone 3	0	93	87	82	77	72	68	65	60	56	52	49	46	43
	10	93	87	82	77	72	68	65	60	56	52	49	46	43
	20	93	87	82	77	72	68	65	60	56	52	49	46	43
	30	93	87	82	77	72	68	65	60	56	52	49	46	43
	40	93	87	82	77	72	68	65	60	56	52	49	46	43
	50	89	87	82	77	72	68	65	60	56	52	49	46	43
	60	82	82	82	77	72	68	65	60	56	52	49	46	43
	70	76	76	76	76	72	68	65	60	56	52	49	46	43
	80	71	71	71	71	71	68	65	60	56	52	49	46	43
	90	68	68	68	68	68	68	65	60	56	52	49	46	43

Notes:

1. Tables are based on critical rail span for load combinations as specified in chapter 2 of the ASCE 7-16 and allowable design loads per the 2015 Aluminum Design Manual.
2. Panels are assumed to be in landscape orientation with a maximum width of 42"

Structural ENGINUITY INC
Ingenuity in Engineering

SUNMODO®

Max Rail Spans for SunModo SMR200 Rail System

Table 124a

Mean Roof Height: 15 < h ≤ 30 ft
Roof Angle: 7 < θ ≤ 20 degrees
Exposure Category: B
Panel Orientation: Landscape
North/South Support $\gamma_E = 1$
Roof Type : Gable

Roof Wind Zone	Ground Snow Load (psf)	Wind Speed (mph)												
		90	95	100	105	110	115	120	130	140	150	160	170	180
Zones 1 & 2e	0	139	139	139	139	136	131	126	118	111	105	100	95	90
	10	132	132	132	132	132	131	126	118	111	105	100	95	90
	20	104	104	104	104	104	104	104	104	104	104	100	95	90
	30	104	104	104	104	104	104	104	104	104	104	100	95	90
	40	92	92	92	92	92	92	92	92	92	92	92	92	90
	50	83	83	83	83	83	83	83	83	83	83	83	83	83
	60	77	77	77	77	77	77	77	77	77	77	77	77	77
	70	72	72	72	72	72	72	72	72	72	72	72	72	72
	80	67	67	67	67	67	67	67	67	67	67	67	67	67
	90	64	64	64	64	64	64	64	64	64	64	64	64	64
Zones 2n, 2r, & 3e	0	139	139	132	126	121	116	112	104	98	91	83	77	71
	10	132	132	132	126	121	116	112	104	98	91	83	77	71
	20	104	104	104	104	104	104	104	104	98	91	83	77	71
	30	104	104	104	104	104	104	104	104	98	91	83	77	71
	40	92	92	92	92	92	92	92	92	92	91	83	77	71
	50	83	83	83	83	83	83	83	83	83	83	83	77	71
	60	77	77	77	77	77	77	77	77	77	77	77	77	71
	70	72	72	72	72	72	72	72	72	72	72	72	72	71
	80	67	67	67	67	67	67	67	67	67	67	67	67	67
	90	64	64	64	64	64	64	64	64	64	64	64	64	64
Zone 3r	0	134	128	122	116	111	107	103	96	88	81	74	68	64
	10	132	128	122	116	111	107	103	96	88	81	74	68	64
	20	104	104	104	104	104	104	103	96	88	81	74	68	64
	30	104	104	104	104	104	104	103	96	88	81	74	68	64
	40	92	92	92	92	92	92	92	92	88	81	74	68	64
	50	83	83	83	83	83	83	83	83	83	81	74	68	64
	60	77	77	77	77	77	77	77	77	77	77	74	68	64
	70	72	72	72	72	72	72	72	72	72	72	72	68	64
	80	67	67	67	67	67	67	67	67	67	67	67	67	64
	90	64	64	64	64	64	64	64	64	64	64	64	64	64

Notes:

1. Tables are based on critical rail span for load combinations as specified in chapter 2 of the ASCE 7-16 and allowable design loads per the 2015 Aluminum Design Manual.
2. Panels are assumed to be in landscape orientation with a maximum width of 42"

Structural ENGINUITY INC
Ingenuity in Engineering

SUNMODO®

Max Rail Spans for SunModo SMR200 Rail System

Table 124b

Mean Roof Height: 15 < h ≤ 30 ft
Roof Angle: 7 < θ ≤ 20 degrees
Exposure Category: B
Panel Orientation: Landscape
North/South Support γ_E = 1.5
Roof Type : Gable

Roof Wind Zone	Ground Snow Load (psf)	Wind Speed (mph)												
		90	95	100	105	110	115	120	130	140	150	160	170	180
Zones 1 & 2e	0	136	130	124	119	115	111	107	100	95	88	81	76	71
	10	132	130	124	119	115	111	107	100	95	88	81	76	71
	20	104	104	104	104	104	104	104	100	95	88	81	76	71
	30	104	104	104	104	104	104	104	100	95	88	81	76	71
	40	92	92	92	92	92	92	92	92	92	88	81	76	71
	50	83	83	83	83	83	83	83	83	83	83	81	76	71
	60	77	77	77	77	77	77	77	77	77	77	77	76	71
	70	72	72	72	72	72	72	72	72	72	72	72	72	71
	80	67	67	67	67	67	67	67	67	67	67	67	67	67
	90	64	64	64	64	64	64	64	64	64	64	64	64	64
Zones 2n, 2r, & 3e	0	121	115	110	105	101	97	94	84	76	69	65	61	57
	10	121	115	110	105	101	97	94	84	76	69	65	61	57
	20	104	104	104	104	101	97	94	84	76	69	65	61	57
	30	104	104	104	104	101	97	94	84	76	69	65	61	57
	40	92	92	92	92	92	92	92	84	76	69	65	61	57
	50	83	83	83	83	83	83	83	83	76	69	65	61	57
	60	77	77	77	77	77	77	77	77	76	69	65	61	57
	70	72	72	72	72	72	72	72	72	72	69	65	61	57
	80	67	67	67	67	67	67	67	67	67	67	65	61	57
	90	64	64	64	64	64	64	64	64	64	64	64	61	57
Zone 3r	0	111	106	101	97	93	88	83	74	68	63	59	55	52
	10	111	106	101	97	93	88	83	74	68	63	59	55	52
	20	104	104	101	97	93	88	83	74	68	63	59	55	52
	30	104	104	101	97	93	88	83	74	68	63	59	55	52
	40	92	92	92	92	92	88	83	74	68	63	59	55	52
	50	83	83	83	83	83	83	83	74	68	63	59	55	52
	60	77	77	77	77	77	77	77	74	68	63	59	55	52
	70	72	72	72	72	72	72	72	72	68	63	59	55	52
	80	67	67	67	67	67	67	67	67	67	63	59	55	52
	90	64	64	64	64	64	64	64	64	64	63	59	55	52

Notes:

1. Tables are based on critical rail span for load combinations as specified in chapter 2 of the ASCE 7-16 and allowable design loads per the 2015 Aluminum Design Manual.
2. Panels are assumed to be in landscape orientation with a maximum width of 42"

Structural ENGINUITY INC
Ingenuity in Engineering

SUNMODO®

Max Rail Spans for SunModo SMR200 Rail System

Table 125a

Mean Roof Height: 15 < h ≤ 30 ft
Roof Angle: 7 < θ ≤ 20 degrees
Exposure Category: C
Panel Orientation: Landscape
North/South Support $Y_E = 1$
Roof Type : Gable

Roof Wind Zone	Ground Snow Load (psf)	Wind Speed (mph)												
		90	95	100	105	110	115	120	130	140	150	160	170	180
Zones 1 & 2e	0	139	133	128	123	118	114	110	103	97	91	85	79	74
	10	132	131	128	123	118	114	110	103	97	91	85	79	74
	20	104	104	104	104	104	104	104	103	97	91	85	79	74
	30	104	104	104	104	104	104	104	103	97	91	85	79	74
	40	92	92	92	92	92	92	92	92	92	91	85	79	74
	50	83	83	83	83	83	83	83	83	83	83	83	79	74
	60	77	77	77	77	77	77	77	77	77	77	77	77	74
	70	72	72	72	72	72	72	72	72	72	72	72	72	72
	80	67	67	67	67	67	67	67	67	67	67	67	67	67
	90	64	64	64	64	64	64	64	64	64	64	64	64	64
Zones 2n, 2r, & 3e	0	124	118	113	108	104	100	96	88	80	73	67	63	59
	10	124	118	113	108	104	100	96	88	80	73	67	63	59
	20	104	104	104	104	104	100	96	88	80	73	67	63	59
	30	104	104	104	104	104	100	96	88	80	73	67	63	59
	40	92	92	92	92	92	92	92	88	80	73	67	63	59
	50	83	83	83	83	83	83	83	83	80	73	67	63	59
	60	77	77	77	77	77	77	77	77	77	73	67	63	59
	70	72	72	72	72	72	72	72	72	72	72	67	63	59
	80	67	67	67	67	67	67	67	67	67	67	67	63	59
	90	64	64	64	64	64	64	64	64	64	64	64	63	59
Zone 3r	0	115	109	105	100	96	92	87	78	71	65	61	57	54
	10	115	109	105	100	96	92	87	78	71	65	61	57	54
	20	104	104	104	100	96	92	87	78	71	65	61	57	54
	30	104	104	104	100	96	92	87	78	71	65	61	57	54
	40	92	92	92	92	92	92	87	78	71	65	61	57	54
	50	83	83	83	83	83	83	83	78	71	65	61	57	54
	60	77	77	77	77	77	77	77	77	71	65	61	57	54
	70	72	72	72	72	72	72	72	72	71	65	61	57	54
	80	67	67	67	67	67	67	67	67	67	65	61	57	54
	90	64	64	64	64	64	64	64	64	64	64	61	57	54

Notes:

1. Tables are based on critical rail span for load combinations as specified in chapter 2 of the ASCE 7-16 and allowable design loads per the 2015 Aluminum Design Manual.
2. Panels are assumed to be in landscape orientation with a maximum width of 42"

Structural ENGINUITY INC
Ingenuity in Engineering

SUNMODO®

Max Rail Spans for SunModo SMR200 Rail System

Table 125b

Mean Roof Height: 15 < h ≤ 30 ft
Roof Angle: 7 < θ ≤ 20 degrees
Exposure Category: C
Panel Orientation: Landscape
North/South Support γ_E = 1.5
Roof Type : Gable

Roof Wind Zone	Ground Snow Load (psf)	Wind Speed (mph)												
		90	95	100	105	110	115	120	130	140	150	160	170	180
Zones 1 & 2e	0	118	113	108	104	100	97	94	85	78	72	67	63	59
	10	118	113	108	104	100	97	94	85	78	72	67	63	59
	20	104	104	104	104	100	97	94	85	78	72	67	63	59
	30	104	104	104	104	100	97	94	85	78	72	67	63	59
	40	92	92	92	92	92	92	92	85	78	72	67	63	59
	50	83	83	83	83	83	83	83	83	78	72	67	63	59
	60	77	77	77	77	77	77	77	77	77	72	67	63	59
	70	72	72	72	72	72	72	72	72	72	72	67	63	59
	80	67	67	67	67	67	67	67	67	67	67	67	63	59
	90	64	64	64	64	64	64	64	64	64	64	64	63	59
Zones 2n, 2r, & 3e	0	104	99	95	89	84	79	75	67	62	58	55	51	48
	10	104	99	95	89	84	79	75	67	62	58	55	51	48
	20	104	99	95	89	84	79	75	67	62	58	55	51	48
	30	104	99	95	89	84	79	75	67	62	58	55	51	48
	40	92	92	92	89	84	79	75	67	62	58	55	51	48
	50	83	83	83	83	83	79	75	67	62	58	55	51	48
	60	77	77	77	77	77	77	75	67	62	58	55	51	48
	70	72	72	72	72	72	72	72	67	62	58	55	51	48
	80	67	67	67	67	67	67	67	67	62	58	55	51	48
	90	64	64	64	64	64	64	64	64	62	58	55	51	48
Zone 3r	0	96	90	84	79	74	70	67	61	57	53	50	47	44
	10	96	90	84	79	74	70	67	61	57	53	50	47	44
	20	96	90	84	79	74	70	67	61	57	53	50	47	44
	30	96	90	84	79	74	70	67	61	57	53	50	47	44
	40	92	90	84	79	74	70	67	61	57	53	50	47	44
	50	83	83	83	79	74	70	67	61	57	53	50	47	44
	60	77	77	77	77	74	70	67	61	57	53	50	47	44
	70	72	72	72	72	72	70	67	61	57	53	50	47	44
	80	67	67	67	67	67	67	67	61	57	53	50	47	44
	90	64	64	64	64	64	64	64	61	57	53	50	47	44

Notes:

1. Tables are based on critical rail span for load combinations as specified in chapter 2 of the ASCE 7-16 and allowable design loads per the 2015 Aluminum Design Manual.
2. Panels are assumed to be in landscape orientation with a maximum width of 42"

Structural ENGINUITY INC
Ingenuity in Engineering

SUNMODO®

Max Rail Spans for SunModo SMR200 Rail System

Table 126a

Mean Roof Height: 15 < h ≤ 30 ft
Roof Angle: 7 < θ ≤ 20 degrees
Exposure Category: D
Panel Orientation: Landscape
North/South Support $\gamma_E = 1$
Roof Type : Gable

Roof Wind Zone	Ground Snow Load (psf)	Wind Speed (mph)												
		90	95	100	105	110	115	120	130	140	150	160	170	180
Zones 1 & 2e	0	130	124	119	114	110	106	103	97	90	83	77	72	67
	10	130	124	119	114	110	106	103	97	90	83	77	72	67
	20	104	104	104	104	104	104	103	97	90	83	77	72	67
	30	104	104	104	104	104	104	103	97	90	83	77	72	67
	40	92	92	92	92	92	92	92	92	90	83	77	72	67
	50	83	83	83	83	83	83	83	83	83	83	77	72	67
	60	77	77	77	77	77	77	77	77	77	77	77	72	67
	70	72	72	72	72	72	72	72	72	72	72	72	72	67
	80	67	67	67	67	67	67	67	67	67	67	67	67	67
	90	64	64	64	64	64	64	64	64	64	64	64	64	64
Zones 2n, 2r, & 3e	0	115	110	105	101	97	93	87	79	71	66	62	58	55
	10	115	110	105	101	97	93	87	79	71	66	62	58	55
	20	104	104	104	101	97	93	87	79	71	66	62	58	55
	30	104	104	104	101	97	93	87	79	71	66	62	58	55
	40	92	92	92	92	92	92	87	79	71	66	62	58	55
	50	83	83	83	83	83	83	83	79	71	66	62	58	55
	60	77	77	77	77	77	77	77	77	71	66	62	58	55
	70	72	72	72	72	72	72	72	72	71	66	62	58	55
	80	67	67	67	67	67	67	67	67	67	66	62	58	55
	90	64	64	64	64	64	64	64	64	64	64	62	58	55
Zone 3r	0	106	102	97	93	87	82	77	70	64	60	56	53	50
	10	106	102	97	93	87	82	77	70	64	60	56	53	50
	20	104	102	97	93	87	82	77	70	64	60	56	53	50
	30	104	102	97	93	87	82	77	70	64	60	56	53	50
	40	92	92	92	92	87	82	77	70	64	60	56	53	50
	50	83	83	83	83	83	82	77	70	64	60	56	53	50
	60	77	77	77	77	77	77	77	70	64	60	56	53	50
	70	72	72	72	72	72	72	72	70	64	60	56	53	50
	80	67	67	67	67	67	67	67	67	64	60	56	53	50
	90	64	64	64	64	64	64	64	64	64	60	56	53	50

Notes:

1. Tables are based on critical rail span for load combinations as specified in chapter 2 of the ASCE 7-16 and allowable design loads per the 2015 Aluminum Design Manual.
2. Panels are assumed to be in landscape orientation with a maximum width of 42"

Structural ENGINUITY INC
Ingenuity in Engineering

SUNMODO®

Max Rail Spans for SunModo SMR200 Rail System

Table 126b

Mean Roof Height: 15 < h ≤ 30 ft
Roof Angle: 7 < θ ≤ 20 degrees
Exposure Category: D
Panel Orientation: Landscape
North/South Support γ_E = 1.5
Roof Type : Gable

Roof Wind Zone	Ground Snow Load (psf)	Wind Speed (mph)												
		90	95	100	105	110	115	120	130	140	150	160	170	180
Zones 1 & 2e	0	110	105	101	97	94	89	85	77	71	66	62	58	55
	10	110	105	101	97	94	89	85	77	71	66	62	58	55
	20	104	104	101	97	94	89	85	77	71	66	62	58	55
	30	104	104	101	97	94	89	85	77	71	66	62	58	55
	40	92	92	92	92	92	89	85	77	71	66	62	58	55
	50	83	83	83	83	83	83	83	77	71	66	62	58	55
	60	77	77	77	77	77	77	77	77	71	66	62	58	55
	70	72	72	72	72	72	72	72	72	71	66	62	58	55
	80	67	67	67	67	67	67	67	67	67	66	62	58	55
	90	64	64	64	64	64	64	64	64	64	64	62	58	55
Zones 2n, 2r, & 3e	0	96	91	85	80	75	71	67	62	57	53	50	47	44
	10	96	91	85	80	75	71	67	62	57	53	50	47	44
	20	96	91	85	80	75	71	67	62	57	53	50	47	44
	30	96	91	85	80	75	71	67	62	57	53	50	47	44
	40	92	91	85	80	75	71	67	62	57	53	50	47	44
	50	83	83	83	80	75	71	67	62	57	53	50	47	44
	60	77	77	77	77	75	71	67	62	57	53	50	47	44
	70	72	72	72	72	72	71	67	62	57	53	50	47	44
	80	67	67	67	67	67	67	67	62	57	53	50	47	44
	90	64	64	64	64	64	64	64	62	57	53	50	47	44
Zone 3r	0	87	81	75	71	67	64	61	56	52	49	46	43	40
	10	87	81	75	71	67	64	61	56	52	49	46	43	40
	20	87	81	75	71	67	64	61	56	52	49	46	43	40
	30	87	81	75	71	67	64	61	56	52	49	46	43	40
	40	87	81	75	71	67	64	61	56	52	49	46	43	40
	50	83	81	75	71	67	64	61	56	52	49	46	43	40
	60	77	77	75	71	67	64	61	56	52	49	46	43	40
	70	72	72	72	71	67	64	61	56	52	49	46	43	40
	80	67	67	67	67	67	64	61	56	52	49	46	43	40
	90	64	64	64	64	64	64	61	56	52	49	46	43	40

Notes:

1. Tables are based on critical rail span for load combinations as specified in chapter 2 of the ASCE 7-16 and allowable design loads per the 2015 Aluminum Design Manual.
2. Panels are assumed to be in landscape orientation with a maximum width of 42"

Structural ENGINUITY INC
Ingenuity in Engineering

SUNMODO®

Max Rail Spans for SunModo SMR200 Rail System

Table 127a

Mean Roof Height: 15 < h ≤ 30 ft
Roof Angle: 20 < θ ≤ 27 degrees
Exposure Category: B
Panel Orientation: Landscape
North/South Support $Y_E = 1$
Roof Type : Gable

Roof Wind Zone	Ground Snow Load (psf)	Wind Speed (mph)												
		90	95	100	105	110	115	120	130	140	150	160	170	180
Zones 1 & 2e	0	139	139	139	139	139	139	139	133	125	118	112	107	102
	10	139	139	139	139	139	139	139	133	125	118	112	107	102
	20	123	123	123	123	123	123	123	123	123	118	112	107	102
	30	105	105	105	105	105	105	105	105	105	105	105	104	102
	40	93	93	93	93	93	93	93	93	93	93	93	93	93
	50	84	84	84	84	84	84	84	84	84	84	84	84	84
	60	78	78	78	78	78	78	78	78	78	78	78	78	78
	70	72	72	72	72	72	72	72	72	72	72	72	72	72
	80	68	68	68	68	68	68	68	68	68	68	68	68	68
	90	64	64	64	64	64	64	64	64	64	64	64	64	64
Zones 2n, 2r, & 3e	0	139	139	139	136	130	125	120	112	105	99	93	86	80
	10	139	139	139	136	130	125	120	112	105	99	93	86	80
	20	123	123	123	123	123	123	120	112	105	99	93	86	80
	30	105	105	105	105	105	105	105	105	105	99	93	86	80
	40	93	93	93	93	93	93	93	93	93	93	93	86	80
	50	84	84	84	84	84	84	84	84	84	84	84	84	80
	60	78	78	78	78	78	78	78	78	78	78	78	78	78
	70	72	72	72	72	72	72	72	72	72	72	72	72	72
	80	68	68	68	68	68	68	68	68	68	68	68	68	68
	90	64	64	64	64	64	64	64	64	64	64	64	64	64
Zone 3r	0	139	139	134	128	123	118	113	105	99	92	84	78	72
	10	139	139	134	128	123	118	113	105	99	92	84	78	72
	20	123	123	123	123	123	118	113	105	99	92	84	78	72
	30	105	105	105	105	105	105	105	105	99	92	84	78	72
	40	93	93	93	93	93	93	93	93	93	92	84	78	72
	50	84	84	84	84	84	84	84	84	84	84	84	78	72
	60	78	78	78	78	78	78	78	78	78	78	78	78	72
	70	72	72	72	72	72	72	72	72	72	72	72	72	72
	80	68	68	68	68	68	68	68	68	68	68	68	68	68
	90	64	64	64	64	64	64	64	64	64	64	64	64	64

Notes:

1. Tables are based on critical rail span for load combinations as specified in chapter 2 of the ASCE 7-16 and allowable design loads per the 2015 Aluminum Design Manual.
2. Panels are assumed to be in landscape orientation with a maximum width of 42"

Structural ENGINUITY INC
Ingenuity in Engineering

SUNMODO®

Max Rail Spans for SunModo SMR200 Rail System

Table 127b

Mean Roof Height: 15 < h ≤ 30 ft
Roof Angle: 20 < θ ≤ 27 degrees
Exposure Category: B
Panel Orientation: Landscape
North/South Support γ_E = 1.5
Roof Type : Gable

Roof Wind Zone	Ground Snow Load (psf)	Wind Speed (mph)												
		90	95	100	105	110	115	120	130	140	150	160	170	180
Zones 1 & 2e	0	139	139	139	134	129	124	120	112	106	100	95	89	83
	10	139	139	139	134	129	124	120	112	106	100	95	89	83
	20	123	123	123	123	123	123	120	112	106	100	95	89	83
	30	105	105	105	105	105	105	105	105	105	100	95	89	83
	40	93	93	93	93	93	93	93	93	93	93	93	89	83
	50	84	84	84	84	84	84	84	84	84	84	84	84	83
	60	78	78	78	78	78	78	78	78	78	78	78	78	78
	70	72	72	72	72	72	72	72	72	72	72	72	72	72
	80	68	68	68	68	68	68	68	68	68	68	68	68	68
	90	64	64	64	64	64	64	64	64	64	64	64	64	64
Zones 2n, 2r, & 3e	0	130	124	118	113	109	105	101	94	85	78	72	67	63
	10	130	124	118	113	109	105	101	94	85	78	72	67	63
	20	123	123	118	113	109	105	101	94	85	78	72	67	63
	30	105	105	105	105	105	105	101	94	85	78	72	67	63
	40	93	93	93	93	93	93	93	93	85	78	72	67	63
	50	84	84	84	84	84	84	84	84	84	78	72	67	63
	60	78	78	78	78	78	78	78	78	78	78	72	67	63
	70	72	72	72	72	72	72	72	72	72	72	72	67	63
	80	68	68	68	68	68	68	68	68	68	68	68	67	63
	90	64	64	64	64	64	64	64	64	64	64	64	64	63
Zone 3r	0	122	116	111	106	102	98	95	85	77	70	65	60	57
	10	122	116	111	106	102	98	95	85	77	70	65	60	57
	20	122	116	111	106	102	98	95	85	77	70	65	60	57
	30	105	105	105	105	102	98	95	85	77	70	65	60	57
	40	93	93	93	93	93	93	93	85	77	70	65	60	57
	50	84	84	84	84	84	84	84	84	77	70	65	60	57
	60	78	78	78	78	78	78	78	78	77	70	65	60	57
	70	72	72	72	72	72	72	72	72	72	70	65	60	57
	80	68	68	68	68	68	68	68	68	68	68	65	60	57
	90	64	64	64	64	64	64	64	64	64	64	64	60	57

Notes:

1. Tables are based on critical rail span for load combinations as specified in chapter 2 of the ASCE 7-16 and allowable design loads per the 2015 Aluminum Design Manual.
2. Panels are assumed to be in landscape orientation with a maximum width of 42"

Structural ENGINUITY INC
Ingenuity in Engineering

SUNMODO®

Max Rail Spans for SunModo SMR200 Rail System

Table 128a

Mean Roof Height: 15 < h ≤ 30 ft
Roof Angle: 20 < θ ≤ 27 degrees
Exposure Category: C
Panel Orientation: Landscape
North/South Support $\gamma_E = 1$
Roof Type : Gable

Roof Wind Zone	Ground Snow Load (psf)	Wind Speed (mph)												
		90	95	100	105	110	115	120	130	140	150	160	170	180
Zones 1 & 2e	0	139	139	139	138	133	128	123	115	109	103	98	93	87
	10	139	139	139	138	133	128	123	115	109	103	98	93	87
	20	123	123	123	123	123	123	122	115	109	103	98	93	87
	30	105	105	105	105	105	105	105	105	105	103	98	93	87
	40	93	93	93	93	93	93	93	93	93	93	92	91	87
	50	84	84	84	84	84	84	84	84	84	84	84	84	83
	60	78	78	78	78	78	78	78	78	78	78	78	78	78
	70	72	72	72	72	72	72	72	72	72	72	72	72	72
	80	68	68	68	68	68	68	68	68	68	68	68	68	68
	90	64	64	64	64	64	64	64	64	64	64	64	64	64
Zones 2n, 2r, & 3e	0	134	128	122	117	112	108	104	97	89	81	75	69	65
	10	134	128	122	117	112	108	104	97	89	81	75	69	65
	20	123	123	122	117	112	108	104	97	89	81	75	69	65
	30	105	105	105	105	105	105	104	97	89	81	75	69	65
	40	93	93	93	93	93	93	93	93	89	81	75	69	65
	50	84	84	84	84	84	84	84	84	84	81	75	69	65
	60	78	78	78	78	78	78	78	78	78	78	75	69	65
	70	72	72	72	72	72	72	72	72	72	72	72	69	65
	80	68	68	68	68	68	68	68	68	68	68	68	68	65
	90	64	64	64	64	64	64	64	64	64	64	64	64	64
Zone 3r	0	127	120	115	110	105	101	98	89	80	73	67	63	59
	10	127	120	115	110	105	101	98	89	80	73	67	63	59
	20	123	120	115	110	105	101	98	89	80	73	67	63	59
	30	105	105	105	105	105	101	98	89	80	73	67	63	59
	40	93	93	93	93	93	93	93	89	80	73	67	63	59
	50	84	84	84	84	84	84	84	84	80	73	67	63	59
	60	78	78	78	78	78	78	78	78	78	73	67	63	59
	70	72	72	72	72	72	72	72	72	72	72	67	63	59
	80	68	68	68	68	68	68	68	68	68	68	67	63	59
	90	64	64	64	64	64	64	64	64	64	64	64	63	59

Notes:

1. Tables are based on critical rail span for load combinations as specified in chapter 2 of the ASCE 7-16 and allowable design loads per the 2015 Aluminum Design Manual.
2. Panels are assumed to be in landscape orientation with a maximum width of 42"

Structural ENGINUITY INC
Ingenuity in Engineering

SUNMODO®

Max Rail Spans for SunModo SMR200 Rail System

Table 128b

Mean Roof Height: 15 < h ≤ 30 ft
Roof Angle: 20 < θ ≤ 27 degrees
Exposure Category: C
Panel Orientation: Landscape
North/South Support γ_E = 1.5
Roof Type : Gable

Roof Wind Zone	Ground Snow Load (psf)	Wind Speed (mph)												
		90	95	100	105	110	115	120	130	140	150	160	170	180
Zones 1 & 2e	0	132	127	121	117	112	108	105	98	92	85	79	73	69
	10	132	127	121	117	112	108	105	98	92	85	79	73	69
	20	123	123	121	117	112	108	105	98	92	85	79	73	69
	30	105	105	105	105	105	105	105	98	92	85	79	73	69
	40	93	93	93	93	93	93	93	93	92	85	79	73	69
	50	84	84	84	84	84	84	84	84	84	84	79	73	69
	60	78	78	78	78	78	78	78	78	78	78	78	73	69
	70	72	72	72	72	72	72	72	72	72	72	72	72	69
	80	68	68	68	68	68	68	68	68	68	68	68	68	68
	90	64	64	64	64	64	64	64	64	64	64	64	64	64
Zones 2n, 2r, & 3e	0	112	107	102	98	94	88	84	75	68	64	60	56	53
	10	112	107	102	98	94	88	84	75	68	64	60	56	53
	20	112	107	102	98	94	88	84	75	68	64	60	56	53
	30	105	105	102	98	94	88	84	75	68	64	60	56	53
	40	93	93	93	93	93	88	84	75	68	64	60	56	53
	50	84	84	84	84	84	84	84	75	68	64	60	56	53
	60	78	78	78	78	78	78	78	75	68	64	60	56	53
	70	72	72	72	72	72	72	72	72	68	64	60	56	53
	80	68	68	68	68	68	68	68	68	68	64	60	56	53
	90	64	64	64	64	64	64	64	64	64	64	60	56	53
Zone 3r	0	105	100	96	90	85	80	75	68	62	57	53	50	47
	10	105	100	96	90	85	80	75	68	62	57	53	50	47
	20	105	100	96	90	85	80	75	68	62	57	53	50	47
	30	105	100	96	90	85	80	75	68	62	57	53	50	47
	40	93	93	93	90	85	80	75	68	62	57	53	50	47
	50	84	84	84	84	84	80	75	68	62	57	53	50	47
	60	78	78	78	78	78	78	75	68	62	57	53	50	47
	70	72	72	72	72	72	72	72	68	62	57	53	50	47
	80	68	68	68	68	68	68	68	68	62	57	53	50	47
	90	64	64	64	64	64	64	64	64	62	57	53	50	47

Notes:

1. Tables are based on critical rail span for load combinations as specified in chapter 2 of the ASCE 7-16 and allowable design loads per the 2015 Aluminum Design Manual.
2. Panels are assumed to be in landscape orientation with a maximum width of 42"

Structural ENGINUITY INC
Ingenuity in Engineering

SUNMODO®

Max Rail Spans for SunModo SMR200 Rail System

Table 129a

Mean Roof Height: 15 < h ≤ 30 ft
Roof Angle: 20 < θ ≤ 27 degrees
Exposure Category: D
Panel Orientation: Landscape
North/South Support $\gamma_E = 1$
Roof Type : Gable

Roof Wind Zone	Ground Snow Load (psf)	Wind Speed (mph)												
		90	95	100	105	110	115	120	130	140	150	160	170	180
Zones 1 & 2e	0	139	139	134	129	124	119	115	108	102	96	90	84	79
	10	139	139	134	129	124	119	115	108	102	96	90	84	79
	20	123	123	123	123	122	119	115	108	102	96	90	84	79
	30	105	105	105	105	105	105	105	104	102	96	90	84	79
	40	93	93	93	93	93	93	93	93	93	92	90	84	79
	50	84	84	84	84	84	84	84	84	84	84	84	82	79
	60	78	78	78	78	78	78	78	78	78	78	78	77	76
	70	72	72	72	72	72	72	72	72	72	72	72	72	72
	80	68	68	68	68	68	68	68	68	68	68	68	68	68
	90	64	64	64	64	64	64	64	64	64	64	64	64	64
Zones 2n, 2r, & 3e	0	124	118	113	108	104	100	97	88	80	73	67	63	60
	10	124	118	113	108	104	100	97	88	80	73	67	63	60
	20	123	118	113	108	104	100	97	88	80	73	67	63	60
	30	105	105	105	105	104	100	97	88	80	73	67	63	60
	40	93	93	93	93	93	93	93	88	80	73	67	63	60
	50	84	84	84	84	84	84	84	84	80	73	67	63	60
	60	78	78	78	78	78	78	78	78	78	73	67	63	60
	70	72	72	72	72	72	72	72	72	72	72	67	63	60
	80	68	68	68	68	68	68	68	68	68	68	67	63	60
	90	64	64	64	64	64	64	64	64	64	64	64	63	60
Zone 3r	0	117	111	106	102	98	94	88	79	72	66	61	57	53
	10	117	111	106	102	98	94	88	79	72	66	61	57	53
	20	117	111	106	102	98	94	88	79	72	66	61	57	53
	30	105	105	105	102	98	94	88	79	72	66	61	57	53
	40	93	93	93	93	93	93	88	79	72	66	61	57	53
	50	84	84	84	84	84	84	84	79	72	66	61	57	53
	60	78	78	78	78	78	78	78	78	72	66	61	57	53
	70	72	72	72	72	72	72	72	72	72	66	61	57	53
	80	68	68	68	68	68	68	68	68	68	66	61	57	53
	90	64	64	64	64	64	64	64	64	64	64	61	57	53

Notes:

1. Tables are based on critical rail span for load combinations as specified in chapter 2 of the ASCE 7-16 and allowable design loads per the 2015 Aluminum Design Manual.
2. Panels are assumed to be in landscape orientation with a maximum width of 42"

Structural ENGINUITY INC
Ingenuity in Engineering

SUNMODO®

Max Rail Spans for SunModo SMR200 Rail System

Table 129b

Mean Roof Height: 15 < h ≤ 30 ft
Roof Angle: 20 < θ ≤ 27 degrees
Exposure Category: D
Panel Orientation: Landscape
North/South Support γ_E = 1.5
Roof Type : Gable

Roof Wind Zone	Ground Snow Load (psf)	Wind Speed (mph)												
		90	95	100	105	110	115	120	130	140	150	160	170	180
Zones 1 & 2e	0	123	118	113	109	105	101	98	91	83	77	71	67	63
	10	123	118	113	109	105	101	98	91	83	77	71	67	63
	20	123	118	113	109	105	101	98	91	83	77	71	67	63
	30	105	105	105	105	105	101	98	91	83	77	71	67	63
	40	93	93	93	93	93	93	93	91	83	77	71	67	63
	50	84	84	84	84	84	84	84	84	83	77	71	67	63
	60	78	78	78	78	78	78	78	78	78	77	71	67	63
	70	72	72	72	72	72	72	72	72	72	72	71	67	63
	80	68	68	68	68	68	68	68	68	68	68	68	67	63
	90	64	64	64	64	64	64	64	64	64	64	64	64	63
Zones 2n, 2r, & 3e	0	104	99	95	89	84	79	75	68	63	59	55	52	49
	10	104	99	95	89	84	79	75	68	63	59	55	52	49
	20	104	99	95	89	84	79	75	68	63	59	55	52	49
	30	104	99	95	89	84	79	75	68	63	59	55	52	49
	40	93	93	93	89	84	79	75	68	63	59	55	52	49
	50	84	84	84	84	84	79	75	68	63	59	55	52	49
	60	78	78	78	78	78	78	75	68	63	59	55	52	49
	70	72	72	72	72	72	72	72	68	63	59	55	52	49
	80	68	68	68	68	68	68	68	68	63	59	55	52	49
	90	64	64	64	64	64	64	64	64	63	59	55	52	49
Zone 3r	0	98	92	86	81	76	71	67	62	56	52	48	45	42
	10	98	92	86	81	76	71	67	62	56	52	48	45	42
	20	98	92	86	81	76	71	67	62	56	52	48	45	42
	30	98	92	86	81	76	71	67	62	56	52	48	45	42
	40	93	92	86	81	76	71	67	62	56	52	48	45	42
	50	84	84	84	81	76	71	67	62	56	52	48	45	42
	60	78	78	78	78	76	71	67	62	56	52	48	45	42
	70	72	72	72	72	72	71	67	62	56	52	48	45	42
	80	68	68	68	68	68	68	67	62	56	52	48	45	42
	90	64	64	64	64	64	64	64	62	56	52	48	45	42

Notes:

1. Tables are based on critical rail span for load combinations as specified in chapter 2 of the ASCE 7-16 and allowable design loads per the 2015 Aluminum Design Manual.
2. Panels are assumed to be in landscape orientation with a maximum width of 42"

Structural ENGINUITY INC
Ingenuity in Engineering

SUNMODO®

Max Rail Spans for SunModo SMR200 Rail System

Table 130a

Mean Roof Height: 15 < h ≤ 30 ft
Roof Angle: 27 < θ ≤ 45 degrees
Exposure Category: B
Panel Orientation: Landscape
North/South Support $\gamma_E = 1$
Roof Type : Gable

Roof Wind Zone	Ground Snow Load (psf)	Wind Speed (mph)												
		90	95	100	105	110	115	120	130	140	150	160	170	180
Zones 1, 2e, & 2r	0	139	139	139	139	139	139	139	131	122	115	108	103	98
	10	139	139	139	139	139	139	139	131	122	115	108	103	98
	20	127	127	127	127	126	125	123	121	118	115	108	103	98
	30	110	110	110	110	110	110	110	108	106	104	102	99	97
	40	98	98	98	98	98	98	98	98	97	95	94	92	90
	50	89	89	89	89	89	89	89	89	89	89	87	86	84
	60	82	82	82	82	82	82	82	82	82	82	82	81	79
	70	77	77	77	77	77	77	77	77	77	77	77	77	75
	80	72	72	72	72	72	72	72	72	72	72	72	72	72
	90	68	68	68	68	68	68	68	68	68	68	68	68	68
Zones 2n & 3r	0	139	139	139	139	139	136	131	122	114	108	102	97	90
	10	139	139	139	139	139	136	131	122	114	108	102	97	90
	20	127	127	127	127	126	125	123	121	114	108	102	97	90
	30	110	110	110	110	110	110	110	108	106	104	102	97	90
	40	98	98	98	98	98	98	98	98	97	95	94	92	90
	50	89	89	89	89	89	89	89	89	89	89	87	86	84
	60	82	82	82	82	82	82	82	82	82	82	82	81	79
	70	77	77	77	77	77	77	77	77	77	77	77	77	75
	80	72	72	72	72	72	72	72	72	72	72	72	72	72
	90	68	68	68	68	68	68	68	68	68	68	68	68	68
Zone 3e	0	139	139	139	134	128	123	119	111	104	98	91	85	79
	10	139	139	139	134	128	123	119	111	104	98	91	85	79
	20	127	127	127	127	126	123	119	111	104	98	91	85	79
	30	110	110	110	110	110	110	110	108	104	98	91	85	79
	40	98	98	98	98	98	98	98	98	97	95	91	85	79
	50	89	89	89	89	89	89	89	89	89	89	87	85	79
	60	82	82	82	82	82	82	82	82	82	82	82	81	79
	70	77	77	77	77	77	77	77	77	77	77	77	77	75
	80	72	72	72	72	72	72	72	72	72	72	72	72	72
	90	68	68	68	68	68	68	68	68	68	68	68	68	68

Notes:

1. Tables are based on critical rail span for load combinations as specified in chapter 2 of the ASCE 7-16 and allowable design loads per the 2015 Aluminum Design Manual.
2. Panels are assumed to be in landscape orientation with a maximum width of 42"

Structural ENGINUITY INC
Ingenuity in Engineering

SUNMODO®

Max Rail Spans for SunModo SMR200 Rail System

Table 130b

Mean Roof Height: 15 < h ≤ 30 ft
Roof Angle: 27 < θ ≤ 45 degrees
Exposure Category: B
Panel Orientation: Landscape
North/South Support γ_E = 1.5
Roof Type : Gable

Roof Wind Zone	Ground Snow Load (psf)	Wind Speed (mph)												
		90	95	100	105	110	115	120	130	140	150	160	170	180
Zones 1, 2e, & 2r	0	139	139	138	132	126	121	117	109	102	96	88	81	75
	10	139	139	138	132	126	121	117	109	102	96	88	81	75
	20	127	127	127	127	126	121	117	109	102	96	88	81	75
	30	110	110	110	110	110	110	110	108	102	96	88	81	75
	40	98	98	98	98	98	98	98	98	97	95	88	81	75
	50	89	89	89	89	89	89	89	89	89	89	87	81	75
	60	82	82	82	82	82	82	82	82	82	82	82	81	75
	70	77	77	77	77	77	77	77	77	77	77	77	77	75
	80	72	72	72	72	72	72	72	72	72	72	72	72	72
	90	68	68	68	68	68	68	68	68	68	68	68	68	68
Zones 2n & 3r	0	139	134	128	123	118	114	110	102	96	88	81	75	70
	10	139	134	128	123	118	114	110	102	96	88	81	75	70
	20	127	127	127	123	118	114	110	102	96	88	81	75	70
	30	110	110	110	110	110	110	110	102	96	88	81	75	70
	40	98	98	98	98	98	98	98	98	96	88	81	75	70
	50	89	89	89	89	89	89	89	89	89	88	81	75	70
	60	82	82	82	82	82	82	82	82	82	82	81	75	70
	70	77	77	77	77	77	77	77	77	77	77	77	75	70
	80	72	72	72	72	72	72	72	72	72	72	72	72	70
	90	68	68	68	68	68	68	68	68	68	68	68	68	68
Zone 3e	0	128	122	117	112	108	104	100	92	84	77	71	66	62
	10	128	122	117	112	108	104	100	92	84	77	71	66	62
	20	127	122	117	112	108	104	100	92	84	77	71	66	62
	30	110	110	110	110	108	104	100	92	84	77	71	66	62
	40	98	98	98	98	98	98	98	92	84	77	71	66	62
	50	89	89	89	89	89	89	89	89	84	77	71	66	62
	60	82	82	82	82	82	82	82	82	82	77	71	66	62
	70	77	77	77	77	77	77	77	77	77	77	71	66	62
	80	72	72	72	72	72	72	72	72	72	72	71	66	62
	90	68	68	68	68	68	68	68	68	68	68	68	66	62

Notes:

1. Tables are based on critical rail span for load combinations as specified in chapter 2 of the ASCE 7-16 and allowable design loads per the 2015 Aluminum Design Manual.
2. Panels are assumed to be in landscape orientation with a maximum width of 42"

Structural ENGINUITY INC
Ingenuity in Engineering

SUNMODO®

Max Rail Spans for SunModo SMR200 Rail System

Table 131a

Mean Roof Height: 15 < h ≤ 30 ft
Roof Angle: 27 < θ ≤ 45 degrees
Exposure Category: C
Panel Orientation: Landscape
North/South Support $\gamma_E = 1$
Roof Type : Gable

Roof Wind Zone	Ground Snow Load (psf)	Wind Speed (mph)												
		90	95	100	105	110	115	120	130	140	150	160	170	180
Zones 1, 2e, & 2r	0	139	139	139	136	131	125	120	112	105	99	92	85	79
	10	139	139	139	136	131	125	120	112	105	99	92	85	79
	20	127	125	124	122	121	119	117	112	105	99	92	85	79
	30	110	110	110	109	108	107	105	103	100	98	92	85	79
	40	98	98	98	98	98	98	97	95	93	90	88	85	79
	50	89	89	89	89	89	89	89	88	86	85	83	81	79
	60	82	82	82	82	82	82	82	82	81	80	78	77	75
	70	77	77	77	77	77	77	77	77	77	76	74	73	72
	80	72	72	72	72	72	72	72	72	72	72	71	70	69
	90	68	68	68	68	68	68	68	68	68	68	68	67	66
Zones 2n & 3r	0	139	139	132	127	122	117	113	105	99	92	85	79	73
	10	139	139	132	127	122	117	113	105	99	92	85	79	73
	20	127	125	124	122	121	117	113	105	99	92	85	79	73
	30	110	110	110	109	108	107	105	103	99	92	85	79	73
	40	98	98	98	98	98	98	97	95	93	90	85	79	73
	50	89	89	89	89	89	89	89	88	86	85	83	79	73
	60	82	82	82	82	82	82	82	82	81	80	78	77	73
	70	77	77	77	77	77	77	77	77	77	76	74	73	72
	80	72	72	72	72	72	72	72	72	72	72	71	70	69
	90	68	68	68	68	68	68	68	68	68	68	68	67	66
Zone 3e	0	132	126	120	115	111	107	103	96	88	80	74	69	64
	10	132	126	120	115	111	107	103	96	88	80	74	69	64
	20	127	125	120	115	111	107	103	96	88	80	74	69	64
	30	110	110	110	109	108	107	103	96	88	80	74	69	64
	40	98	98	98	98	98	98	97	95	88	80	74	69	64
	50	89	89	89	89	89	89	89	88	86	80	74	69	64
	60	82	82	82	82	82	82	82	82	81	80	74	69	64
	70	77	77	77	77	77	77	77	77	77	76	74	69	64
	80	72	72	72	72	72	72	72	72	72	72	71	69	64
	90	68	68	68	68	68	68	68	68	68	68	68	67	64

Notes:

1. Tables are based on critical rail span for load combinations as specified in chapter 2 of the ASCE 7-16 and allowable design loads per the 2015 Aluminum Design Manual.
2. Panels are assumed to be in landscape orientation with a maximum width of 42"

Structural ENGINUITY INC
Ingenuity in Engineering

SUNMODO®

Max Rail Spans for SunModo SMR200 Rail System

Table 131b

Mean Roof Height: 15 < h ≤ 30 ft
Roof Angle: 27 < θ ≤ 45 degrees
Exposure Category: C
Panel Orientation: Landscape
North/South Support γ_E = 1.5
Roof Type : Gable

Roof Wind Zone	Ground Snow Load (psf)	Wind Speed (mph)												
		90	95	100	105	110	115	120	130	140	150	160	170	180
Zones 1, 2e, & 2r	0	130	124	118	113	109	105	101	93	84	77	71	66	62
	10	130	124	118	113	109	105	101	93	84	77	71	66	62
	20	127	124	118	113	109	105	101	93	84	77	71	66	62
	30	110	110	110	109	108	105	101	93	84	77	71	66	62
	40	98	98	98	98	98	98	97	93	84	77	71	66	62
	50	89	89	89	89	89	89	89	88	84	77	71	66	62
	60	82	82	82	82	82	82	82	82	81	77	71	66	62
	70	77	77	77	77	77	77	77	77	77	76	71	66	62
	80	72	72	72	72	72	72	72	72	72	72	71	66	62
	90	68	68	68	68	68	68	68	68	68	68	68	66	62
Zones 2n & 3r	0	121	116	111	106	102	99	94	85	78	72	66	62	59
	10	121	116	111	106	102	99	94	85	78	72	66	62	59
	20	121	116	111	106	102	99	94	85	78	72	66	62	59
	30	110	110	110	106	102	99	94	85	78	72	66	62	59
	40	98	98	98	98	98	98	94	85	78	72	66	62	59
	50	89	89	89	89	89	89	89	85	78	72	66	62	59
	60	82	82	82	82	82	82	82	82	78	72	66	62	59
	70	77	77	77	77	77	77	77	77	77	72	66	62	59
	80	72	72	72	72	72	72	72	72	72	72	66	62	59
	90	68	68	68	68	68	68	68	68	68	68	66	62	59
Zone 3e	0	111	106	101	97	92	87	82	75	68	63	59	55	52
	10	111	106	101	97	92	87	82	75	68	63	59	55	52
	20	111	106	101	97	92	87	82	75	68	63	59	55	52
	30	110	106	101	97	92	87	82	75	68	63	59	55	52
	40	98	98	98	97	92	87	82	75	68	63	59	55	52
	50	89	89	89	89	89	87	82	75	68	63	59	55	52
	60	82	82	82	82	82	82	82	75	68	63	59	55	52
	70	77	77	77	77	77	77	77	75	68	63	59	55	52
	80	72	72	72	72	72	72	72	72	68	63	59	55	52
	90	68	68	68	68	68	68	68	68	68	63	59	55	52

Notes:

1. Tables are based on critical rail span for load combinations as specified in chapter 2 of the ASCE 7-16 and allowable design loads per the 2015 Aluminum Design Manual.
2. Panels are assumed to be in landscape orientation with a maximum width of 42"

Structural ENGINUITY INC
Ingenuity in Engineering

SUNMODO®

Max Rail Spans for SunModo SMR200 Rail System

Table 132a

Mean Roof Height: 15 < h ≤ 30 ft
Roof Angle: 27 < θ ≤ 45 degrees
Exposure Category: D
Panel Orientation: Landscape
North/South Support $Y_E = 1$
Roof Type : Gable

Roof Wind Zone	Ground Snow Load (psf)	Wind Speed (mph)												
		90	95	100	105	110	115	120	130	140	150	160	170	180
Zones 1, 2e, & 2r	0	139	138	132	126	121	116	112	104	98	90	82	76	71
	10	139	138	132	126	121	116	112	104	98	90	82	76	71
	20	124	123	121	119	118	116	112	104	98	90	82	76	71
	30	110	109	108	107	105	104	103	100	97	90	82	76	71
	40	98	98	98	98	97	96	94	92	90	88	82	76	71
	50	89	89	89	89	89	89	88	86	84	82	80	76	71
	60	82	82	82	82	82	82	82	81	79	78	76	74	71
	70	77	77	77	77	77	77	77	77	75	74	72	71	69
	80	72	72	72	72	72	72	72	72	72	71	69	68	67
	90	68	68	68	68	68	68	68	68	68	68	67	66	64
Zones 2n & 3r	0	135	128	123	118	113	109	105	98	90	83	76	71	66
	10	135	128	123	118	113	109	105	98	90	83	76	71	66
	20	124	123	121	118	113	109	105	98	90	83	76	71	66
	30	110	109	108	107	105	104	103	98	90	83	76	71	66
	40	98	98	98	98	97	96	94	92	90	83	76	71	66
	50	89	89	89	89	89	89	88	86	84	82	76	71	66
	60	82	82	82	82	82	82	82	81	79	78	76	71	66
	70	77	77	77	77	77	77	77	77	75	74	72	71	66
	80	72	72	72	72	72	72	72	72	72	71	69	68	66
	90	68	68	68	68	68	68	68	68	68	68	67	66	64
Zone 3e	0	123	117	112	107	103	99	96	86	79	72	67	63	59
	10	123	117	112	107	103	99	96	86	79	72	67	63	59
	20	123	117	112	107	103	99	96	86	79	72	67	63	59
	30	110	109	108	107	103	99	96	86	79	72	67	63	59
	40	98	98	98	98	97	96	94	86	79	72	67	63	59
	50	89	89	89	89	89	89	88	86	79	72	67	63	59
	60	82	82	82	82	82	82	82	81	79	72	67	63	59
	70	77	77	77	77	77	77	77	77	75	72	67	63	59
	80	72	72	72	72	72	72	72	72	72	71	67	63	59
	90	68	68	68	68	68	68	68	68	68	68	67	63	59

Notes:

1. Tables are based on critical rail span for load combinations as specified in chapter 2 of the ASCE 7-16 and allowable design loads per the 2015 Aluminum Design Manual.
2. Panels are assumed to be in landscape orientation with a maximum width of 42"

Structural ENGINUITY INC
Ingenuity in Engineering

SUNMODO®

Max Rail Spans for SunModo SMR200 Rail System

Table 132b

Mean Roof Height: 15 < h ≤ 30 ft
Roof Angle: 27 < θ ≤ 45 degrees
Exposure Category: D
Panel Orientation: Landscape
North/South Support γ_E = 1.5
Roof Type : Gable

Roof Wind Zone	Ground Snow Load (psf)	Wind Speed (mph)												
		90	95	100	105	110	115	120	130	140	150	160	170	180
Zones 1, 2e, & 2r	0	121	115	110	105	101	97	92	83	75	69	64	61	57
	10	121	115	110	105	101	97	92	83	75	69	64	61	57
	20	121	115	110	105	101	97	92	83	75	69	64	61	57
	30	110	109	108	105	101	97	92	83	75	69	64	61	57
	40	98	98	98	98	97	96	92	83	75	69	64	61	57
	50	89	89	89	89	89	89	88	83	75	69	64	61	57
	60	82	82	82	82	82	82	82	81	75	69	64	61	57
	70	77	77	77	77	77	77	77	77	75	69	64	61	57
	80	72	72	72	72	72	72	72	72	72	69	64	61	57
	90	68	68	68	68	68	68	68	68	68	68	64	61	57
Zones 2n & 3r	0	113	108	103	99	95	90	85	77	70	65	61	57	54
	10	113	108	103	99	95	90	85	77	70	65	61	57	54
	20	113	108	103	99	95	90	85	77	70	65	61	57	54
	30	110	108	103	99	95	90	85	77	70	65	61	57	54
	40	98	98	98	98	95	90	85	77	70	65	61	57	54
	50	89	89	89	89	89	89	85	77	70	65	61	57	54
	60	82	82	82	82	82	82	82	77	70	65	61	57	54
	70	77	77	77	77	77	77	77	77	70	65	61	57	54
	80	72	72	72	72	72	72	72	72	70	65	61	57	54
	90	68	68	68	68	68	68	68	68	68	65	61	57	54
Zone 3e	0	103	99	93	88	83	78	74	67	62	57	53	50	47
	10	103	99	93	88	83	78	74	67	62	57	53	50	47
	20	103	99	93	88	83	78	74	67	62	57	53	50	47
	30	103	99	93	88	83	78	74	67	62	57	53	50	47
	40	98	98	93	88	83	78	74	67	62	57	53	50	47
	50	89	89	89	88	83	78	74	67	62	57	53	50	47
	60	82	82	82	82	82	78	74	67	62	57	53	50	47
	70	77	77	77	77	77	77	74	67	62	57	53	50	47
	80	72	72	72	72	72	72	72	67	62	57	53	50	47
	90	68	68	68	68	68	68	68	67	62	57	53	50	47

Notes:

1. Tables are based on critical rail span for load combinations as specified in chapter 2 of the ASCE 7-16 and allowable design loads per the 2015 Aluminum Design Manual.
2. Panels are assumed to be in landscape orientation with a maximum width of 42"

Structural ENGINUITY INC
Ingenuity in Engineering

SUNMODO®

Max Rail Spans for SunModo SMR200 Rail System

Table 133a

Mean Roof Height: 15 < h ≤ 30 ft
Roof Angle: 7 < θ ≤ 20 degrees
Exposure Category: B
Panel Orientation: Landscape
North/South Support γ_E = 1
Roof Type : Hip h/B = ≥ 0.8

Roof Wind Zone	Ground Snow Load (psf)	Wind Speed (mph)												
		90	95	100	105	110	115	120	130	140	150	160	170	180
Zone 1	0	139	139	139	139	139	137	132	123	116	110	104	99	95
	10	132	132	131	131	130	129	128	123	116	110	104	99	95
	20	104	104	104	104	104	104	104	104	104	104	102	99	95
	30	104	104	104	104	104	104	104	104	104	104	102	99	95
	40	92	92	92	92	92	92	92	92	92	92	92	91	90
	50	83	83	83	83	83	83	83	83	83	83	83	83	83
	60	77	77	77	77	77	77	77	77	77	77	77	77	77
	70	72	72	72	72	72	72	72	72	72	72	72	72	72
	80	67	67	67	67	67	67	67	67	67	67	67	67	67
	90	64	64	64	64	64	64	64	64	64	64	64	64	64
Zone 2r	0	139	139	139	137	132	126	122	113	106	100	95	88	82
	10	132	132	131	131	130	126	122	113	106	100	95	88	82
	20	104	104	104	104	104	104	104	104	104	100	95	88	82
	30	104	104	104	104	104	104	104	104	104	100	95	88	82
	40	92	92	92	92	92	92	92	92	92	92	92	88	82
	50	83	83	83	83	83	83	83	83	83	83	83	83	82
	60	77	77	77	77	77	77	77	77	77	77	77	77	77
	70	72	72	72	72	72	72	72	72	72	72	72	72	72
	80	67	67	67	67	67	67	67	67	67	67	67	67	67
	90	64	64	64	64	64	64	64	64	64	64	64	64	64
Zones 2e & 3	0	139	139	139	132	127	122	117	109	103	97	91	84	78
	10	132	132	131	131	127	122	117	109	103	97	91	84	78
	20	104	104	104	104	104	104	104	104	103	97	91	84	78
	30	104	104	104	104	104	104	104	104	103	97	91	84	78
	40	92	92	92	92	92	92	92	92	92	92	91	84	78
	50	83	83	83	83	83	83	83	83	83	83	83	83	78
	60	77	77	77	77	77	77	77	77	77	77	77	77	77
	70	72	72	72	72	72	72	72	72	72	72	72	72	72
	80	67	67	67	67	67	67	67	67	67	67	67	67	67
	90	64	64	64	64	64	64	64	64	64	64	64	64	64

Notes:

1. Tables are based on critical rail span for load combinations as specified in chapter 2 of the ASCE 7-16 and allowable design loads per the 2015 Aluminum Design Manual.
2. Panels are assumed to be in landscape orientation with a maximum width of 42"

Structural ENGINUITY INC
Ingenuity in Engineering

SUNMODO®

Max Rail Spans for SunModo SMR200 Rail System

Table 133b

Mean Roof Height: 15 < h ≤ 30 ft
Roof Angle: 7 < θ ≤ 20 degrees
Exposure Category: B

Panel Orientation: Landscape
North/South Support γ_E = 1.5
Roof Type : Hip h/B = ≥ 0.8

Roof Wind Zone	Ground Snow Load (psf)	Wind Speed (mph)												
		90	95	100	105	110	115	120	130	140	150	160	170	180
Zone 1	0	139	136	130	124	120	115	112	105	99	93	87	81	75
	10	132	132	130	124	120	115	112	105	99	93	87	81	75
	20	104	104	104	104	104	104	104	104	99	93	87	81	75
	30	104	104	104	104	104	104	104	104	99	93	87	81	75
	40	92	92	92	92	92	92	92	92	92	92	87	81	75
	50	83	83	83	83	83	83	83	83	83	83	83	81	75
	60	77	77	77	77	77	77	77	77	77	77	77	77	75
	70	72	72	72	72	72	72	72	72	72	72	72	72	72
	80	67	67	67	67	67	67	67	67	67	67	67	67	67
	90	64	64	64	64	64	64	64	64	64	64	64	64	64
Zone 2r	0	131	125	119	114	110	106	102	95	87	80	74	68	64
	10	131	125	119	114	110	106	102	95	87	80	74	68	64
	20	104	104	104	104	104	104	102	95	87	80	74	68	64
	30	104	104	104	104	104	104	102	95	87	80	74	68	64
	40	92	92	92	92	92	92	92	92	87	80	74	68	64
	50	83	83	83	83	83	83	83	83	83	80	74	68	64
	60	77	77	77	77	77	77	77	77	77	77	74	68	64
	70	72	72	72	72	72	72	72	72	72	72	72	68	64
	80	67	67	67	67	67	67	67	67	67	67	67	67	64
	90	64	64	64	64	64	64	64	64	64	64	64	64	64
Zones 2e & 3	0	127	121	115	110	106	102	99	91	83	76	70	65	62
	10	127	121	115	110	106	102	99	91	83	76	70	65	62
	20	104	104	104	104	104	102	99	91	83	76	70	65	62
	30	104	104	104	104	104	102	99	91	83	76	70	65	62
	40	92	92	92	92	92	92	92	91	83	76	70	65	62
	50	83	83	83	83	83	83	83	83	83	76	70	65	62
	60	77	77	77	77	77	77	77	77	77	76	70	65	62
	70	72	72	72	72	72	72	72	72	72	72	70	65	62
	80	67	67	67	67	67	67	67	67	67	67	67	65	62
	90	64	64	64	64	64	64	64	64	64	64	64	64	62

Notes:

1. Tables are based on critical rail span for load combinations as specified in chapter 2 of the ASCE 7-16 and allowable design loads per the 2015 Aluminum Design Manual.
2. Panels are assumed to be in landscape orientation with a maximum width of 42"

Structural ENGINUITY INC
Ingenuity in Engineering

SUNMODO®

Max Rail Spans for SunModo SMR200 Rail System

Table 134a

Mean Roof Height: 15 < h ≤ 30 ft
Roof Angle: 7 < θ ≤ 20 degrees
Exposure Category: C
Panel Orientation: Landscape
North/South Support Y_E = 1
Roof Type : Hip h/B = ≥ 0.8

Roof Wind Zone	Ground Snow Load (psf)	Wind Speed (mph)												
		90	95	100	105	110	115	120	130	140	150	160	170	180
Zone 1	0	139	139	134	128	123	119	115	108	101	96	90	84	79
	10	130	129	128	127	123	119	115	108	101	96	90	84	79
	20	104	104	104	104	104	104	104	103	101	96	90	84	79
	30	104	104	104	104	104	104	104	103	101	96	90	84	79
	40	92	92	92	92	92	92	92	92	92	90	89	84	79
	50	83	83	83	83	83	83	83	83	83	83	82	81	79
	60	77	77	77	77	77	77	77	77	77	77	77	76	75
	70	72	72	72	72	72	72	72	72	72	72	72	72	71
	80	67	67	67	67	67	67	67	67	67	67	67	67	67
	90	64	64	64	64	64	64	64	64	64	64	64	64	64
Zone 2r	0	136	129	123	118	113	109	105	98	91	84	77	71	67
	10	130	129	123	118	113	109	105	98	91	84	77	71	67
	20	104	104	104	104	104	104	104	98	91	84	77	71	67
	30	104	104	104	104	104	104	104	98	91	84	77	71	67
	40	92	92	92	92	92	92	92	92	91	84	77	71	67
	50	83	83	83	83	83	83	83	83	83	83	77	71	67
	60	77	77	77	77	77	77	77	77	77	77	77	71	67
	70	72	72	72	72	72	72	72	72	72	72	72	71	67
	80	67	67	67	67	67	67	67	67	67	67	67	67	67
	90	64	64	64	64	64	64	64	64	64	64	64	64	64
Zones 2e & 3	0	131	124	119	114	109	105	102	95	87	79	73	68	64
	10	130	124	119	114	109	105	102	95	87	79	73	68	64
	20	104	104	104	104	104	104	102	95	87	79	73	68	64
	30	104	104	104	104	104	104	102	95	87	79	73	68	64
	40	92	92	92	92	92	92	92	92	87	79	73	68	64
	50	83	83	83	83	83	83	83	83	83	79	73	68	64
	60	77	77	77	77	77	77	77	77	77	77	73	68	64
	70	72	72	72	72	72	72	72	72	72	72	72	68	64
	80	67	67	67	67	67	67	67	67	67	67	67	67	64
	90	64	64	64	64	64	64	64	64	64	64	64	64	64

Notes:

1. Tables are based on critical rail span for load combinations as specified in chapter 2 of the ASCE 7-16 and allowable design loads per the 2015 Aluminum Design Manual.
2. Panels are assumed to be in landscape orientation with a maximum width of 42"

Structural ENGINUITY INC
Ingenuity in Engineering

SUNMODO®

Max Rail Spans for SunModo SMR200 Rail System

Table 134b

Mean Roof Height: 15 < h ≤ 30 ft
Roof Angle: 7 < θ ≤ 20 degrees
Exposure Category: C
Panel Orientation: Landscape
North/South Support γ_E = 1.5
Roof Type : Hip h/B = ≥ 0.8

Roof Wind Zone	Ground Snow Load (psf)	Wind Speed (mph)												
		90	95	100	105	110	115	120	130	140	150	160	170	180
Zone 1	0	123	118	113	108	105	101	98	91	83	77	71	67	63
	10	123	118	113	108	105	101	98	91	83	77	71	67	63
	20	104	104	104	104	104	101	98	91	83	77	71	67	63
	30	104	104	104	104	104	101	98	91	83	77	71	67	63
	40	92	92	92	92	92	92	92	91	83	77	71	67	63
	50	83	83	83	83	83	83	83	83	83	77	71	67	63
	60	77	77	77	77	77	77	77	77	77	77	71	67	63
	70	72	72	72	72	72	72	72	72	72	72	71	67	63
	80	67	67	67	67	67	67	67	67	67	67	67	67	63
	90	64	64	64	64	64	64	64	64	64	64	64	64	63
Zone 2r	0	113	108	103	99	95	91	86	77	71	65	61	57	54
	10	113	108	103	99	95	91	86	77	71	65	61	57	54
	20	104	104	103	99	95	91	86	77	71	65	61	57	54
	30	104	104	103	99	95	91	86	77	71	65	61	57	54
	40	92	92	92	92	92	91	86	77	71	65	61	57	54
	50	83	83	83	83	83	83	83	77	71	65	61	57	54
	60	77	77	77	77	77	77	77	77	71	65	61	57	54
	70	72	72	72	72	72	72	72	72	71	65	61	57	54
	80	67	67	67	67	67	67	67	67	67	65	61	57	54
	90	64	64	64	64	64	64	64	64	64	64	61	57	54
Zones 2e & 3	0	109	104	100	96	91	86	82	74	67	63	59	55	52
	10	109	104	100	96	91	86	82	74	67	63	59	55	52
	20	104	104	100	96	91	86	82	74	67	63	59	55	52
	30	104	104	100	96	91	86	82	74	67	63	59	55	52
	40	92	92	92	92	91	86	82	74	67	63	59	55	52
	50	83	83	83	83	83	83	82	74	67	63	59	55	52
	60	77	77	77	77	77	77	77	74	67	63	59	55	52
	70	72	72	72	72	72	72	72	72	67	63	59	55	52
	80	67	67	67	67	67	67	67	67	67	63	59	55	52
	90	64	64	64	64	64	64	64	64	64	63	59	55	52

Notes:

1. Tables are based on critical rail span for load combinations as specified in chapter 2 of the ASCE 7-16 and allowable design loads per the 2015 Aluminum Design Manual.
2. Panels are assumed to be in landscape orientation with a maximum width of 42"

Structural ENGINUITY INC
Ingenuity in Engineering

SUNMODO®

Max Rail Spans for SunModo SMR200 Rail System

Table 135a

Mean Roof Height: 15 < h ≤ 30 ft
Roof Angle: 7 < θ ≤ 20 degrees
Exposure Category: D

Panel Orientation: Landscape
North/South Support γ_E = 1
Roof Type : Hip h/B = ≥ 0.8

Roof Wind Zone	Ground Snow Load (psf)	Wind Speed (mph)												
		90	95	100	105	110	115	120	130	140	150	160	170	180
Zone 1	0	136	130	124	119	115	111	107	101	95	88	82	76	71
	10	128	127	124	119	115	111	107	101	95	88	82	76	71
	20	104	104	104	104	104	104	103	101	95	88	82	76	71
	30	104	104	104	104	104	104	103	101	95	88	82	76	71
	40	92	92	92	92	92	92	92	92	90	88	82	76	71
	50	83	83	83	83	83	83	83	83	83	82	80	76	71
	60	77	77	77	77	77	77	77	77	77	77	75	74	71
	70	72	72	72	72	72	72	72	72	72	72	71	70	69
	80	67	67	67	67	67	67	67	67	67	67	67	67	66
	90	64	64	64	64	64	64	64	64	64	64	64	64	63
Zone 2r	0	125	120	114	110	105	101	98	90	82	75	69	65	61
	10	125	120	114	110	105	101	98	90	82	75	69	65	61
	20	104	104	104	104	104	101	98	90	82	75	69	65	61
	30	104	104	104	104	104	101	98	90	82	75	69	65	61
	40	92	92	92	92	92	92	92	90	82	75	69	65	61
	50	83	83	83	83	83	83	83	83	82	75	69	65	61
	60	77	77	77	77	77	77	77	77	77	75	69	65	61
	70	72	72	72	72	72	72	72	72	72	72	69	65	61
	80	67	67	67	67	67	67	67	67	67	67	67	65	61
	90	64	64	64	64	64	64	64	64	64	64	64	64	61
Zones 2e & 3	0	121	115	110	106	102	98	95	86	78	71	66	62	59
	10	121	115	110	106	102	98	95	86	78	71	66	62	59
	20	104	104	104	104	102	98	95	86	78	71	66	62	59
	30	104	104	104	104	102	98	95	86	78	71	66	62	59
	40	92	92	92	92	92	92	92	86	78	71	66	62	59
	50	83	83	83	83	83	83	83	83	78	71	66	62	59
	60	77	77	77	77	77	77	77	77	77	71	66	62	59
	70	72	72	72	72	72	72	72	72	72	71	66	62	59
	80	67	67	67	67	67	67	67	67	67	67	66	62	59
	90	64	64	64	64	64	64	64	64	64	64	64	62	59

Notes:

1. Tables are based on critical rail span for load combinations as specified in chapter 2 of the ASCE 7-16 and allowable design loads per the 2015 Aluminum Design Manual.
2. Panels are assumed to be in landscape orientation with a maximum width of 42"

Structural ENGINUITY INC
Ingenuity in Engineering

SUNMODO®

Max Rail Spans for SunModo SMR200 Rail System

Table 135b

Mean Roof Height: 15 < h ≤ 30 ft
Roof Angle: 7 < θ ≤ 20 degrees
Exposure Category: D
Panel Orientation: Landscape
North/South Support γ_E = 1.5
Roof Type : Hip h/B = ≥ 0.8

Roof Wind Zone	Ground Snow Load (psf)	Wind Speed (mph)												
		90	95	100	105	110	115	120	130	140	150	160	170	180
Zone 1	0	115	110	105	101	98	95	90	82	75	70	65	61	58
	10	115	110	105	101	98	95	90	82	75	70	65	61	58
	20	104	104	104	101	98	95	90	82	75	70	65	61	58
	30	104	104	104	101	98	95	90	82	75	70	65	61	58
	40	92	92	92	92	92	92	90	82	75	70	65	61	58
	50	83	83	83	83	83	83	83	82	75	70	65	61	58
	60	77	77	77	77	77	77	77	77	75	70	65	61	58
	70	72	72	72	72	72	72	72	72	72	70	65	61	58
	80	67	67	67	67	67	67	67	67	67	67	65	61	58
	90	64	64	64	64	64	64	64	64	64	64	64	61	58
Zone 2r	0	105	100	96	92	86	81	77	70	64	60	56	53	50
	10	105	100	96	92	86	81	77	70	64	60	56	53	50
	20	104	100	96	92	86	81	77	70	64	60	56	53	50
	30	104	100	96	92	86	81	77	70	64	60	56	53	50
	40	92	92	92	92	86	81	77	70	64	60	56	53	50
	50	83	83	83	83	83	81	77	70	64	60	56	53	50
	60	77	77	77	77	77	77	77	70	64	60	56	53	50
	70	72	72	72	72	72	72	72	70	64	60	56	53	50
	80	67	67	67	67	67	67	67	67	64	60	56	53	50
	90	64	64	64	64	64	64	64	64	64	60	56	53	50
Zones 2e & 3	0	102	97	93	87	82	77	73	67	62	57	54	51	48
	10	102	97	93	87	82	77	73	67	62	57	54	51	48
	20	102	97	93	87	82	77	73	67	62	57	54	51	48
	30	102	97	93	87	82	77	73	67	62	57	54	51	48
	40	92	92	92	87	82	77	73	67	62	57	54	51	48
	50	83	83	83	83	82	77	73	67	62	57	54	51	48
	60	77	77	77	77	77	77	73	67	62	57	54	51	48
	70	72	72	72	72	72	72	72	67	62	57	54	51	48
	80	67	67	67	67	67	67	67	67	62	57	54	51	48
	90	64	64	64	64	64	64	64	64	62	57	54	51	48

Notes:

1. Tables are based on critical rail span for load combinations as specified in chapter 2 of the ASCE 7-16 and allowable design loads per the 2015 Aluminum Design Manual.
2. Panels are assumed to be in landscape orientation with a maximum width of 42"

Structural ENGINUITY INC
Ingenuity in Engineering

SUNMODO®

Max Rail Spans for SunModo SMR200 Rail System

Table 136a

Mean Roof Height: 15 < h ≤ 30 ft
Roof Angle: 7 < θ ≤ 20 degrees
Exposure Category: B
Panel Orientation: Landscape
North/South Support γ_E = 1
Roof Type : Hip h/B = ≤ 0.5

Roof Wind Zone	Ground Snow Load (psf)	Wind Speed (mph)												
		90	95	100	105	110	115	120	130	140	150	160	170	180
Zone 1	0	139	139	139	139	139	139	139	139	133	125	119	113	108
	10	132	131	130	129	128	127	126	123	121	119	117	113	108
	20	104	104	104	104	104	104	104	104	104	102	101	99	97
	30	104	104	104	104	104	104	104	104	104	102	101	99	97
	40	92	92	92	92	92	92	92	92	92	92	92	91	89
	50	83	83	83	83	83	83	83	83	83	83	83	83	83
	60	77	77	77	77	77	77	77	77	77	77	77	77	77
	70	72	72	72	72	72	72	72	72	72	72	72	72	72
	80	67	67	67	67	67	67	67	67	67	67	67	67	67
	90	64	64	64	64	64	64	64	64	64	64	64	64	64
Zone 2r	0	139	139	139	137	132	126	122	113	106	100	95	88	82
	10	132	131	130	129	128	126	122	113	106	100	95	88	82
	20	104	104	104	104	104	104	104	104	104	100	95	88	82
	30	104	104	104	104	104	104	104	104	104	100	95	88	82
	40	92	92	92	92	92	92	92	92	92	92	92	88	82
	50	83	83	83	83	83	83	83	83	83	83	83	83	82
	60	77	77	77	77	77	77	77	77	77	77	77	77	77
	70	72	72	72	72	72	72	72	72	72	72	72	72	72
	80	67	67	67	67	67	67	67	67	67	67	67	67	67
	90	64	64	64	64	64	64	64	64	64	64	64	64	64
Zones 2e & 3	0	139	139	139	139	139	139	138	128	120	113	107	101	97
	10	132	131	130	129	128	127	126	123	120	113	107	101	97
	20	104	104	104	104	104	104	104	104	104	102	101	99	97
	30	104	104	104	104	104	104	104	104	104	102	101	99	97
	40	92	92	92	92	92	92	92	92	92	92	92	91	89
	50	83	83	83	83	83	83	83	83	83	83	83	83	83
	60	77	77	77	77	77	77	77	77	77	77	77	77	77
	70	72	72	72	72	72	72	72	72	72	72	72	72	72
	80	67	67	67	67	67	67	67	67	67	67	67	67	67
	90	64	64	64	64	64	64	64	64	64	64	64	64	64

Notes:

1. Tables are based on critical rail span for load combinations as specified in chapter 2 of the ASCE 7-16 and allowable design loads per the 2015 Aluminum Design Manual.
2. Panels are assumed to be in landscape orientation with a maximum width of 42"

Structural ENGINUITY INC
Ingenuity in Engineering

SUNMODO®

Max Rail Spans for SunModo SMR200 Rail System

Table 136b

Mean Roof Height: 15 < h ≤ 30 ft
Roof Angle: 7 < θ ≤ 20 degrees
Exposure Category: B
Panel Orientation: Landscape
North/South Support γ_E = 1.5
Roof Type : Hip h/B = ≤ 0.5

Roof Wind Zone	Ground Snow Load (psf)	Wind Speed (mph)												
		90	95	100	105	110	115	120	130	140	150	160	170	180
Zone 1	0	139	139	139	139	138	132	128	119	112	106	101	96	91
	10	132	131	130	129	128	127	126	119	112	106	101	96	91
	20	104	104	104	104	104	104	104	104	104	102	101	96	91
	30	104	104	104	104	104	104	104	104	104	102	101	96	91
	40	92	92	92	92	92	92	92	92	92	92	92	91	89
	50	83	83	83	83	83	83	83	83	83	83	83	83	83
	60	77	77	77	77	77	77	77	77	77	77	77	77	77
	70	72	72	72	72	72	72	72	72	72	72	72	72	72
	80	67	67	67	67	67	67	67	67	67	67	67	67	67
	90	64	64	64	64	64	64	64	64	64	64	64	64	64
Zone 2r	0	131	125	119	114	110	106	102	95	87	80	74	68	64
	10	131	125	119	114	110	106	102	95	87	80	74	68	64
	20	104	104	104	104	104	104	102	95	87	80	74	68	64
	30	104	104	104	104	104	104	102	95	87	80	74	68	64
	40	92	92	92	92	92	92	92	92	87	80	74	68	64
	50	83	83	83	83	83	83	83	83	83	80	74	68	64
	60	77	77	77	77	77	77	77	77	77	77	74	68	64
	70	72	72	72	72	72	72	72	72	72	72	72	68	64
	80	67	67	67	67	67	67	67	67	67	67	67	67	64
	90	64	64	64	64	64	64	64	64	64	64	64	64	64
Zones 2e & 3	0	139	139	135	129	124	119	115	107	101	95	88	82	76
	10	132	131	130	129	124	119	115	107	101	95	88	82	76
	20	104	104	104	104	104	104	104	104	101	95	88	82	76
	30	104	104	104	104	104	104	104	104	101	95	88	82	76
	40	92	92	92	92	92	92	92	92	92	92	88	82	76
	50	83	83	83	83	83	83	83	83	83	83	83	82	76
	60	77	77	77	77	77	77	77	77	77	77	77	77	76
	70	72	72	72	72	72	72	72	72	72	72	72	72	72
	80	67	67	67	67	67	67	67	67	67	67	67	67	67
	90	64	64	64	64	64	64	64	64	64	64	64	64	64

Notes:

1. Tables are based on critical rail span for load combinations as specified in chapter 2 of the ASCE 7-16 and allowable design loads per the 2015 Aluminum Design Manual.
2. Panels are assumed to be in landscape orientation with a maximum width of 42"

Structural ENGINUITY INC
Ingenuity in Engineering

SUNMODO®

Max Rail Spans for SunModo SMR200 Rail System

Table 137a

Mean Roof Height: 15 < h ≤ 30 ft
Roof Angle: 7 < θ ≤ 20 degrees
Exposure Category: C
Panel Orientation: Landscape
North/South Support γ_E = 1
Roof Type : Hip h/B = ≤ 0.5

Roof Wind Zone	Ground Snow Load (psf)	Wind Speed (mph)												
		90	95	100	105	110	115	120	130	140	150	160	170	180
Zone 1	0	139	139	139	139	139	136	131	123	115	109	104	99	95
	10	128	127	126	125	123	122	121	118	115	109	104	99	95
	20	104	104	104	104	104	104	104	102	100	98	96	93	91
	30	104	104	104	104	104	104	104	102	100	98	96	93	91
	40	92	92	92	92	92	92	92	92	91	90	88	86	85
	50	83	83	83	83	83	83	83	83	83	83	82	80	79
	60	77	77	77	77	77	77	77	77	77	77	77	76	75
	70	72	72	72	72	72	72	72	72	72	72	72	72	71
	80	67	67	67	67	67	67	67	67	67	67	67	67	67
	90	64	64	64	64	64	64	64	64	64	64	64	64	64
Zone 2r	0	136	129	123	118	113	109	105	98	91	84	77	71	67
	10	128	127	123	118	113	109	105	98	91	84	77	71	67
	20	104	104	104	104	104	104	104	98	91	84	77	71	67
	30	104	104	104	104	104	104	104	98	91	84	77	71	67
	40	92	92	92	92	92	92	92	92	91	84	77	71	67
	50	83	83	83	83	83	83	83	83	83	83	77	71	67
	60	77	77	77	77	77	77	77	77	77	77	77	71	67
	70	72	72	72	72	72	72	72	72	72	72	72	71	67
	80	67	67	67	67	67	67	67	67	67	67	67	67	67
	90	64	64	64	64	64	64	64	64	64	64	64	64	64
Zones 2e & 3	0	139	139	139	133	128	123	118	110	104	98	92	85	79
	10	128	127	126	125	123	122	118	110	104	98	92	85	79
	20	104	104	104	104	104	104	104	102	100	98	92	85	79
	30	104	104	104	104	104	104	104	102	100	98	92	85	79
	40	92	92	92	92	92	92	92	92	91	90	88	85	79
	50	83	83	83	83	83	83	83	83	83	83	82	80	79
	60	77	77	77	77	77	77	77	77	77	77	77	76	75
	70	72	72	72	72	72	72	72	72	72	72	72	72	71
	80	67	67	67	67	67	67	67	67	67	67	67	67	67
	90	64	64	64	64	64	64	64	64	64	64	64	64	64

Notes:

1. Tables are based on critical rail span for load combinations as specified in chapter 2 of the ASCE 7-16 and allowable design loads per the 2015 Aluminum Design Manual.
2. Panels are assumed to be in landscape orientation with a maximum width of 42"

Structural ENGINUITY INC
Ingenuity in Engineering

SUNMODO®

Max Rail Spans for SunModo SMR200 Rail System

Table 137b

Mean Roof Height: 15 < h ≤ 30 ft
Roof Angle: 7 < θ ≤ 20 degrees
Exposure Category: C
Panel Orientation: Landscape
North/South Support γ_E = 1.5
Roof Type : Hip h/B = ≤ 0.5

Roof Wind Zone	Ground Snow Load (psf)	Wind Speed (mph)												
		90	95	100	105	110	115	120	130	140	150	160	170	180
Zone 1	0	139	135	129	124	119	115	111	104	98	93	86	80	75
	10	128	127	126	124	119	115	111	104	98	93	86	80	75
	20	104	104	104	104	104	104	104	102	98	93	86	80	75
	30	104	104	104	104	104	104	104	102	98	93	86	80	75
	40	92	92	92	92	92	92	92	92	91	90	86	80	75
	50	83	83	83	83	83	83	83	83	83	83	82	80	75
	60	77	77	77	77	77	77	77	77	77	77	77	76	75
	70	72	72	72	72	72	72	72	72	72	72	72	72	71
	80	67	67	67	67	67	67	67	67	67	67	67	67	67
	90	64	64	64	64	64	64	64	64	64	64	64	64	64
Zone 2r	0	113	108	103	99	95	91	86	77	71	65	61	57	54
	10	113	108	103	99	95	91	86	77	71	65	61	57	54
	20	104	104	103	99	95	91	86	77	71	65	61	57	54
	30	104	104	103	99	95	91	86	77	71	65	61	57	54
	40	92	92	92	92	92	91	86	77	71	65	61	57	54
	50	83	83	83	83	83	83	83	77	71	65	61	57	54
	60	77	77	77	77	77	77	77	77	71	65	61	57	54
	70	72	72	72	72	72	72	72	72	71	65	61	57	54
	80	67	67	67	67	67	67	67	67	67	65	61	57	54
	90	64	64	64	64	64	64	64	64	64	64	61	57	54
Zones 2e & 3	0	127	121	116	111	107	103	100	93	84	77	71	67	63
	10	127	121	116	111	107	103	100	93	84	77	71	67	63
	20	104	104	104	104	104	103	100	93	84	77	71	67	63
	30	104	104	104	104	104	103	100	93	84	77	71	67	63
	40	92	92	92	92	92	92	92	92	84	77	71	67	63
	50	83	83	83	83	83	83	83	83	83	77	71	67	63
	60	77	77	77	77	77	77	77	77	77	77	71	67	63
	70	72	72	72	72	72	72	72	72	72	72	71	67	63
	80	67	67	67	67	67	67	67	67	67	67	67	67	63
	90	64	64	64	64	64	64	64	64	64	64	64	64	63

Notes:

1. Tables are based on critical rail span for load combinations as specified in chapter 2 of the ASCE 7-16 and allowable design loads per the 2015 Aluminum Design Manual.
2. Panels are assumed to be in landscape orientation with a maximum width of 42"

Structural ENGINUITY INC
Ingenuity in Engineering

SUNMODO®

Max Rail Spans for SunModo SMR200 Rail System

Table 138a

Mean Roof Height: 15 < h ≤ 30 ft
Roof Angle: 7 < θ ≤ 20 degrees
Exposure Category: D
Panel Orientation: Landscape
North/South Support γ_E = 1
Roof Type : Hip h/B = ≤ 0.5

Roof Wind Zone	Ground Snow Load (psf)	Wind Speed (mph)												
		90	95	100	105	110	115	120	130	140	150	160	170	180
Zone 1	0	139	139	139	137	132	127	122	115	108	102	97	92	86
	10	127	125	124	122	121	120	118	115	108	102	97	92	86
	20	104	104	104	104	104	103	102	99	97	95	93	90	86
	30	104	104	104	104	104	103	102	99	97	95	93	90	86
	40	92	92	92	92	92	92	92	91	89	87	86	84	82
	50	83	83	83	83	83	83	83	83	83	81	80	78	77
	60	77	77	77	77	77	77	77	77	77	76	75	74	73
	70	72	72	72	72	72	72	72	72	72	72	71	70	69
	80	67	67	67	67	67	67	67	67	67	67	67	67	66
	90	64	64	64	64	64	64	64	64	64	64	64	64	63
Zone 2r	0	125	120	114	110	105	101	98	90	82	75	69	65	61
	10	125	120	114	110	105	101	98	90	82	75	69	65	61
	20	104	104	104	104	104	101	98	90	82	75	69	65	61
	30	104	104	104	104	104	101	98	90	82	75	69	65	61
	40	92	92	92	92	92	92	92	90	82	75	69	65	61
	50	83	83	83	83	83	83	83	83	82	75	69	65	61
	60	77	77	77	77	77	77	77	77	77	75	69	65	61
	70	72	72	72	72	72	72	72	72	72	72	69	65	61
	80	67	67	67	67	67	67	67	67	67	67	67	65	61
	90	64	64	64	64	64	64	64	64	64	64	64	64	61
Zones 2e & 3	0	139	135	129	123	118	114	110	103	97	90	83	77	71
	10	127	125	124	122	118	114	110	103	97	90	83	77	71
	20	104	104	104	104	104	103	102	99	97	90	83	77	71
	30	104	104	104	104	104	103	102	99	97	90	83	77	71
	40	92	92	92	92	92	92	92	91	89	87	83	77	71
	50	83	83	83	83	83	83	83	83	83	81	80	77	71
	60	77	77	77	77	77	77	77	77	77	76	75	74	71
	70	72	72	72	72	72	72	72	72	72	72	71	70	69
	80	67	67	67	67	67	67	67	67	67	67	67	67	66
	90	64	64	64	64	64	64	64	64	64	64	64	64	63

Notes:

1. Tables are based on critical rail span for load combinations as specified in chapter 2 of the ASCE 7-16 and allowable design loads per the 2015 Aluminum Design Manual.
2. Panels are assumed to be in landscape orientation with a maximum width of 42"

Structural ENGINUITY INC
Ingenuity in Engineering

SUNMODO®

Max Rail Spans for SunModo SMR200 Rail System

Table 138b

Mean Roof Height: 15 < h ≤ 30 ft
Roof Angle: 7 < θ ≤ 20 degrees
Exposure Category: D
Panel Orientation: Landscape
North/South Support γ_E = 1.5
Roof Type : Hip h/B = ≤ 0.5

Roof Wind Zone	Ground Snow Load (psf)	Wind Speed (mph)												
		90	95	100	105	110	115	120	130	140	150	160	170	180
Zone 1	0	131	126	120	116	111	107	104	97	91	84	78	73	68
	10	127	125	120	116	111	107	104	97	91	84	78	73	68
	20	104	104	104	104	104	103	102	97	91	84	78	73	68
	30	104	104	104	104	104	103	102	97	91	84	78	73	68
	40	92	92	92	92	92	92	92	91	89	84	78	73	68
	50	83	83	83	83	83	83	83	83	83	81	78	73	68
	60	77	77	77	77	77	77	77	77	77	76	75	73	68
	70	72	72	72	72	72	72	72	72	72	72	71	70	68
	80	67	67	67	67	67	67	67	67	67	67	67	67	66
	90	64	64	64	64	64	64	64	64	64	64	64	64	63
Zone 2r	0	105	100	96	92	86	81	77	70	64	60	56	53	50
	10	105	100	96	92	86	81	77	70	64	60	56	53	50
	20	104	100	96	92	86	81	77	70	64	60	56	53	50
	30	104	100	96	92	86	81	77	70	64	60	56	53	50
	40	92	92	92	92	86	81	77	70	64	60	56	53	50
	50	83	83	83	83	83	81	77	70	64	60	56	53	50
	60	77	77	77	77	77	77	77	70	64	60	56	53	50
	70	72	72	72	72	72	72	72	70	64	60	56	53	50
	80	67	67	67	67	67	67	67	67	64	60	56	53	50
	90	64	64	64	64	64	64	64	64	64	60	56	53	50
Zones 2e & 3	0	118	113	108	104	100	96	92	83	76	70	65	61	58
	10	118	113	108	104	100	96	92	83	76	70	65	61	58
	20	104	104	104	104	100	96	92	83	76	70	65	61	58
	30	104	104	104	104	100	96	92	83	76	70	65	61	58
	40	92	92	92	92	92	92	92	83	76	70	65	61	58
	50	83	83	83	83	83	83	83	83	76	70	65	61	58
	60	77	77	77	77	77	77	77	77	76	70	65	61	58
	70	72	72	72	72	72	72	72	72	72	70	65	61	58
	80	67	67	67	67	67	67	67	67	67	67	65	61	58
	90	64	64	64	64	64	64	64	64	64	64	64	61	58

Notes:

1. Tables are based on critical rail span for load combinations as specified in chapter 2 of the ASCE 7-16 and allowable design loads per the 2015 Aluminum Design Manual.
2. Panels are assumed to be in landscape orientation with a maximum width of 42"

Structural ENGINUITY INC
Ingenuity in Engineering

SUNMODO®

Max Rail Spans for SunModo SMR200 Rail System

Table 139a

Mean Roof Height: 15 < h ≤ 30 ft
Roof Angle: 20 < θ ≤ 27 degrees
Exposure Category: B
Panel Orientation: Landscape
North/South Support Y_E = 1
Roof Type : Hip

Roof Wind Zone	Ground Snow Load (psf)	Wind Speed (mph)												
		90	95	100	105	110	115	120	130	140	150	160	170	180
Zone 1	0	139	139	139	139	139	139	139	139	136	128	120	114	109
	10	139	139	139	139	139	139	139	137	134	128	120	114	109
	20	123	123	123	123	123	123	123	122	120	117	115	113	109
	30	105	105	105	105	105	105	105	105	105	104	102	101	99
	40	93	93	93	93	93	93	93	93	93	93	93	92	90
	50	84	84	84	84	84	84	84	84	84	84	84	84	84
	60	78	78	78	78	78	78	78	78	78	78	78	78	78
	70	72	72	72	72	72	72	72	72	72	72	72	72	72
	80	68	68	68	68	68	68	68	68	68	68	68	68	68
	90	64	64	64	64	64	64	64	64	64	64	64	64	64
Zones 2e, 2r, & 3	0	139	139	139	139	139	138	132	123	115	108	103	98	92
	10	139	139	139	139	139	138	132	123	115	108	103	98	92
	20	123	123	123	123	123	123	123	122	115	108	103	98	92
	30	105	105	105	105	105	105	105	105	105	104	102	98	92
	40	93	93	93	93	93	93	93	93	93	93	93	92	90
	50	84	84	84	84	84	84	84	84	84	84	84	84	84
	60	78	78	78	78	78	78	78	78	78	78	78	78	78
	70	72	72	72	72	72	72	72	72	72	72	72	72	72
	80	68	68	68	68	68	68	68	68	68	68	68	68	68
	90	64	64	64	64	64	64	64	64	64	64	64	64	64

Notes:

1. Tables are based on critical rail span for load combinations as specified in chapter 2 of the ASCE 7-16 and allowable design loads per the 2015 Aluminum Design Manual.
2. Panels are assumed to be in landscape orientation with a maximum width of 42"

Structural ENGINUITY INC
Ingenuity in Engineering

SUNMODO®

Max Rail Spans for SunModo SMR200 Rail System

Table 139b

Mean Roof Height: 15 < h ≤ 30 ft
Roof Angle: 20 < θ ≤ 27 degrees
Exposure Category: B
Panel Orientation: Landscape
North/South Support γ_E = 1.5
Roof Type : Hip

Roof Wind Zone	Ground Snow Load (psf)	Wind Speed (mph)												
		90	95	100	105	110	115	120	130	140	150	160	170	180
Zone 1	0	139	139	139	139	139	135	130	121	113	107	101	96	90
	10	139	139	139	139	139	135	130	121	113	107	101	96	90
	20	123	123	123	123	123	123	123	121	113	107	101	96	90
	30	105	105	105	105	105	105	105	105	105	104	101	96	90
	40	93	93	93	93	93	93	93	93	93	93	93	92	90
	50	84	84	84	84	84	84	84	84	84	84	84	84	84
	60	78	78	78	78	78	78	78	78	78	78	78	78	78
	70	72	72	72	72	72	72	72	72	72	72	72	72	72
	80	68	68	68	68	68	68	68	68	68	68	68	68	68
	90	64	64	64	64	64	64	64	64	64	64	64	64	64
Zones 2e, 2r, & 3	0	139	136	130	124	119	115	110	103	97	90	83	76	71
	10	139	136	130	124	119	115	110	103	97	90	83	76	71
	20	123	123	123	123	119	115	110	103	97	90	83	76	71
	30	105	105	105	105	105	105	105	103	97	90	83	76	71
	40	93	93	93	93	93	93	93	93	93	90	83	76	71
	50	84	84	84	84	84	84	84	84	84	84	83	76	71
	60	78	78	78	78	78	78	78	78	78	78	78	76	71
	70	72	72	72	72	72	72	72	72	72	72	72	72	71
	80	68	68	68	68	68	68	68	68	68	68	68	68	68
	90	64	64	64	64	64	64	64	64	64	64	64	64	64

Notes:

1. Tables are based on critical rail span for load combinations as specified in chapter 2 of the ASCE 7-16 and allowable design loads per the 2015 Aluminum Design Manual.
2. Panels are assumed to be in landscape orientation with a maximum width of 42"

Structural ENGINUITY INC
Ingenuity in Engineering

SUNMODO®

Max Rail Spans for SunModo SMR200 Rail System

Table 140a

Mean Roof Height: 15 < h ≤ 30 ft
Roof Angle: 20 < θ ≤ 27 degrees
Exposure Category: C
Panel Orientation: Landscape
North/South Support $\gamma_E = 1$
Roof Type : Hip

Roof Wind Zone	Ground Snow Load (psf)	Wind Speed (mph)												
		90	95	100	105	110	115	120	130	140	150	160	170	180
Zone 1	0	139	139	139	139	139	139	134	125	117	110	104	99	94
	10	139	139	139	138	137	135	133	125	117	110	104	99	94
	20	123	123	123	123	122	120	119	117	114	110	104	99	94
	30	105	105	105	105	105	105	105	103	101	99	97	95	93
	40	93	93	93	93	93	93	93	93	92	91	89	87	86
	50	84	84	84	84	84	84	84	84	84	84	83	81	80
	60	78	78	78	78	78	78	78	78	78	78	78	76	75
	70	72	72	72	72	72	72	72	72	72	72	72	72	71
	80	68	68	68	68	68	68	68	68	68	68	68	68	68
	90	64	64	64	64	64	64	64	64	64	64	64	64	64
Zones 2e, 2r, & 3	0	139	139	134	128	123	118	114	106	100	94	86	80	74
	10	139	139	134	128	123	118	114	106	100	94	86	80	74
	20	123	123	123	123	122	118	114	106	100	94	86	80	74
	30	105	105	105	105	105	105	105	103	100	94	86	80	74
	40	93	93	93	93	93	93	93	93	92	91	86	80	74
	50	84	84	84	84	84	84	84	84	84	84	83	80	74
	60	78	78	78	78	78	78	78	78	78	78	78	76	74
	70	72	72	72	72	72	72	72	72	72	72	72	72	71
	80	68	68	68	68	68	68	68	68	68	68	68	68	68
	90	64	64	64	64	64	64	64	64	64	64	64	64	64

Notes:

1. Tables are based on critical rail span for load combinations as specified in chapter 2 of the ASCE 7-16 and allowable design loads per the 2015 Aluminum Design Manual.
2. Panels are assumed to be in landscape orientation with a maximum width of 42"

Structural ENGINUITY INC
Ingenuity in Engineering

SUNMODO®

Max Rail Spans for SunModo SMR200 Rail System

Table 140b

Mean Roof Height: 15 < h ≤ 30 ft
Roof Angle: 20 < θ ≤ 27 degrees
Exposure Category: C
Panel Orientation: Landscape
North/South Support γ_E = 1.5
Roof Type : Hip

Roof Wind Zone	Ground Snow Load (psf)	Wind Speed (mph)												
		90	95	100	105	110	115	120	130	140	150	160	170	180
Zone 1	0	139	138	132	126	121	116	112	104	98	91	84	77	72
	10	139	138	132	126	121	116	112	104	98	91	84	77	72
	20	123	123	123	123	121	116	112	104	98	91	84	77	72
	30	105	105	105	105	105	105	105	103	98	91	84	77	72
	40	93	93	93	93	93	93	93	93	92	91	84	77	72
	50	84	84	84	84	84	84	84	84	84	84	83	77	72
	60	78	78	78	78	78	78	78	78	78	78	78	76	72
	70	72	72	72	72	72	72	72	72	72	72	72	72	71
	80	68	68	68	68	68	68	68	68	68	68	68	68	68
	90	64	64	64	64	64	64	64	64	64	64	64	64	64
Zones 2e, 2r, & 3	0	123	117	112	107	103	99	96	87	79	72	67	63	59
	10	123	117	112	107	103	99	96	87	79	72	67	63	59
	20	123	117	112	107	103	99	96	87	79	72	67	63	59
	30	105	105	105	105	103	99	96	87	79	72	67	63	59
	40	93	93	93	93	93	93	93	87	79	72	67	63	59
	50	84	84	84	84	84	84	84	84	79	72	67	63	59
	60	78	78	78	78	78	78	78	78	78	72	67	63	59
	70	72	72	72	72	72	72	72	72	72	72	67	63	59
	80	68	68	68	68	68	68	68	68	68	68	67	63	59
	90	64	64	64	64	64	64	64	64	64	64	64	63	59

Notes:

1. Tables are based on critical rail span for load combinations as specified in chapter 2 of the ASCE 7-16 and allowable design loads per the 2015 Aluminum Design Manual.
2. Panels are assumed to be in landscape orientation with a maximum width of 42"

Structural ENGINUITY INC
Ingenuity in Engineering

SUNMODO®

Max Rail Spans for SunModo SMR200 Rail System

Table 141a

Mean Roof Height: 15 < h ≤ 30 ft
Roof Angle: 20 < θ ≤ 27 degrees
Exposure Category: D
Panel Orientation: Landscape
North/South Support Y_E = 1
Roof Type : Hip

Roof Wind Zone	Ground Snow Load (psf)	Wind Speed (mph)												
		90	95	100	105	110	115	120	130	140	150	160	170	180
Zone 1	0	139	139	139	139	135	129	124	116	108	102	97	90	84
	10	139	139	137	135	133	129	124	116	108	102	97	90	84
	20	123	123	122	121	119	118	116	114	108	102	97	90	84
	30	105	105	105	105	105	104	103	101	99	97	94	90	84
	40	93	93	93	93	93	93	93	92	90	89	87	85	83
	50	84	84	84	84	84	84	84	84	84	82	81	79	78
	60	78	78	78	78	78	78	78	78	78	77	76	75	73
	70	72	72	72	72	72	72	72	72	72	72	72	71	70
	80	68	68	68	68	68	68	68	68	68	68	68	68	67
	90	64	64	64	64	64	64	64	64	64	64	64	64	64
Zones 2e, 2r, & 3	0	137	130	124	119	114	110	106	99	92	84	77	72	67
	10	137	130	124	119	114	110	106	99	92	84	77	72	67
	20	123	123	122	119	114	110	106	99	92	84	77	72	67
	30	105	105	105	105	105	104	103	99	92	84	77	72	67
	40	93	93	93	93	93	93	93	92	90	84	77	72	67
	50	84	84	84	84	84	84	84	84	84	82	77	72	67
	60	78	78	78	78	78	78	78	78	78	77	76	72	67
	70	72	72	72	72	72	72	72	72	72	72	72	71	67
	80	68	68	68	68	68	68	68	68	68	68	68	68	67
	90	64	64	64	64	64	64	64	64	64	64	64	64	64

Notes:

1. Tables are based on critical rail span for load combinations as specified in chapter 2 of the ASCE 7-16 and allowable design loads per the 2015 Aluminum Design Manual.
2. Panels are assumed to be in landscape orientation with a maximum width of 42"

Structural ENGINUITY INC
Ingenuity in Engineering

SUNMODO®

Max Rail Spans for SunModo SMR200 Rail System

Table 141b

Mean Roof Height: 15 < h ≤ 30 ft
Roof Angle: 20 < θ ≤ 27 degrees
Exposure Category: D
Panel Orientation: Landscape
North/South Support γ_E = 1.5
Roof Type : Hip

Roof Wind Zone	Ground Snow Load (psf)	Wind Speed (mph)												
		90	95	100	105	110	115	120	130	140	150	160	170	180
Zone 1	0	135	128	122	117	112	108	104	97	89	82	75	70	65
	10	135	128	122	117	112	108	104	97	89	82	75	70	65
	20	123	123	122	117	112	108	104	97	89	82	75	70	65
	30	105	105	105	105	105	104	103	97	89	82	75	70	65
	40	93	93	93	93	93	93	93	92	89	82	75	70	65
	50	84	84	84	84	84	84	84	84	84	82	75	70	65
	60	78	78	78	78	78	78	78	78	78	77	75	70	65
	70	72	72	72	72	72	72	72	72	72	72	72	70	65
	80	68	68	68	68	68	68	68	68	68	68	68	68	65
	90	64	64	64	64	64	64	64	64	64	64	64	64	64
Zones 2e, 2r, & 3	0	114	109	104	100	96	91	86	78	71	66	61	58	54
	10	114	109	104	100	96	91	86	78	71	66	61	58	54
	20	114	109	104	100	96	91	86	78	71	66	61	58	54
	30	105	105	104	100	96	91	86	78	71	66	61	58	54
	40	93	93	93	93	93	91	86	78	71	66	61	58	54
	50	84	84	84	84	84	84	84	78	71	66	61	58	54
	60	78	78	78	78	78	78	78	78	71	66	61	58	54
	70	72	72	72	72	72	72	72	72	71	66	61	58	54
	80	68	68	68	68	68	68	68	68	68	66	61	58	54
	90	64	64	64	64	64	64	64	64	64	64	61	58	54

Notes:

1. Tables are based on critical rail span for load combinations as specified in chapter 2 of the ASCE 7-16 and allowable design loads per the 2015 Aluminum Design Manual.
2. Panels are assumed to be in landscape orientation with a maximum width of 42"

Structural ENGINUITY INC
Ingenuity in Engineering

SUNMODO®

Max Rail Spans for SunModo SMR200 Rail System

Table 142a

Mean Roof Height: 15 < h ≤ 30 ft
Roof Angle: 27 < θ ≤ 45 degrees
Exposure Category: B
Panel Orientation: Landscape
North/South Support Y_E = 1
Roof Type : Hip

Roof Wind Zone	Ground Snow Load (psf)	Wind Speed (mph)												
		90	95	100	105	110	115	120	130	140	150	160	170	180
Zone 1	0	139	139	139	139	139	139	139	138	129	122	115	109	104
	10	139	139	139	139	139	139	139	138	129	122	115	109	104
	20	127	127	127	127	127	127	127	126	124	122	115	109	104
	30	110	110	110	110	110	110	110	110	110	109	107	105	103
	40	98	98	98	98	98	98	98	98	98	98	98	96	95
	50	89	89	89	89	89	89	89	89	89	89	89	89	88
	60	82	82	82	82	82	82	82	82	82	82	82	82	82
	70	77	77	77	77	77	77	77	77	77	77	77	77	77
	80	72	72	72	72	72	72	72	72	72	72	72	72	72
	90	68	68	68	68	68	68	68	68	68	68	68	68	68
Zone 2e	0	139	139	139	139	139	139	139	134	125	117	110	104	99
	10	139	139	139	139	139	139	139	134	125	117	110	104	99
	20	127	127	127	127	127	127	127	126	124	117	110	104	99
	30	110	110	110	110	110	110	110	110	110	109	107	104	99
	40	98	98	98	98	98	98	98	98	98	98	98	96	95
	50	89	89	89	89	89	89	89	89	89	89	89	89	88
	60	82	82	82	82	82	82	82	82	82	82	82	82	82
	70	77	77	77	77	77	77	77	77	77	77	77	77	77
	80	72	72	72	72	72	72	72	72	72	72	72	72	72
	90	68	68	68	68	68	68	68	68	68	68	68	68	68
Zone 2r	0	139	139	139	139	136	131	126	117	109	103	97	90	84
	10	139	139	139	139	136	131	126	117	109	103	97	90	84
	20	127	127	127	127	127	127	126	117	109	103	97	90	84
	30	110	110	110	110	110	110	110	110	109	103	97	90	84
	40	98	98	98	98	98	98	98	98	98	98	97	90	84
	50	89	89	89	89	89	89	89	89	89	89	89	89	84
	60	82	82	82	82	82	82	82	82	82	82	82	82	82
	70	77	77	77	77	77	77	77	77	77	77	77	77	77
	80	72	72	72	72	72	72	72	72	72	72	72	72	72
	90	68	68	68	68	68	68	68	68	68	68	68	68	68
Zone 3	0	139	139	139	139	139	133	127	117	109	102	96	88	81
	10	139	139	139	139	139	133	127	117	109	102	96	88	81
	20	127	127	127	127	127	127	127	117	109	102	96	88	81
	30	110	110	110	110	110	110	110	110	109	102	96	88	81
	40	98	98	98	98	98	98	98	98	98	98	96	88	81
	50	89	89	89	89	89	89	89	89	89	89	89	88	81
	60	82	82	82	82	82	82	82	82	82	82	82	82	81
	70	77	77	77	77	77	77	77	77	77	77	77	77	77
	80	72	72	72	72	72	72	72	72	72	72	72	72	72
	90	68	68	68	68	68	68	68	68	68	68	68	68	68

Notes:

1. Tables are based on critical rail span for load combinations as specified in chapter 2 of the ASCE 7-16 and allowable design loads per the 2015 Aluminum Design Manual.
2. Panels are assumed to be in landscape orientation with a maximum width of 42"

Structural ENGINUITY INC
Ingenuity in Engineering

SUNMODO®

Max Rail Spans for SunModo SMR200 Rail System

Table 142b

Mean Roof Height: 15 < h ≤ 30 ft
Roof Angle: 27 < θ ≤ 45 degrees
Exposure Category: B
Panel Orientation: Landscape
North/South Support γ_E = 1.5
Roof Type : Hip

Roof Wind Zone	Ground Snow Load (psf)	Wind Speed (mph)												
		90	95	100	105	110	115	120	130	140	150	160	170	180
Zone 1	0	139	139	139	139	134	129	124	115	108	102	97	90	84
	10	139	139	139	139	134	129	124	115	108	102	97	90	84
	20	127	127	127	127	127	127	124	115	108	102	97	90	84
	30	110	110	110	110	110	110	110	110	108	102	97	90	84
	40	98	98	98	98	98	98	98	98	98	98	97	90	84
	50	89	89	89	89	89	89	89	89	89	89	89	89	84
	60	82	82	82	82	82	82	82	82	82	82	82	82	82
	70	77	77	77	77	77	77	77	77	77	77	77	77	77
	80	72	72	72	72	72	72	72	72	72	72	72	72	72
	90	68	68	68	68	68	68	68	68	68	68	68	68	68
Zone 2e	0	139	139	139	136	129	124	119	110	103	97	88	81	75
	10	139	139	139	136	129	124	119	110	103	97	88	81	75
	20	127	127	127	127	127	124	119	110	103	97	88	81	75
	30	110	110	110	110	110	110	110	110	103	97	88	81	75
	40	98	98	98	98	98	98	98	98	98	97	88	81	75
	50	89	89	89	89	89	89	89	89	89	89	88	81	75
	60	82	82	82	82	82	82	82	82	82	82	82	81	75
	70	77	77	77	77	77	77	77	77	77	77	77	77	75
	80	72	72	72	72	72	72	72	72	72	72	72	72	72
	90	68	68	68	68	68	68	68	68	68	68	68	68	68
Zone 2r	0	136	129	123	118	113	109	105	98	89	81	75	69	65
	10	136	129	123	118	113	109	105	98	89	81	75	69	65
	20	127	127	123	118	113	109	105	98	89	81	75	69	65
	30	110	110	110	110	110	109	105	98	89	81	75	69	65
	40	98	98	98	98	98	98	98	98	89	81	75	69	65
	50	89	89	89	89	89	89	89	89	89	81	75	69	65
	60	82	82	82	82	82	82	82	82	82	81	75	69	65
	70	77	77	77	77	77	77	77	77	77	77	75	69	65
	80	72	72	72	72	72	72	72	72	72	72	72	69	65
	90	68	68	68	68	68	68	68	68	68	68	68	68	65
Zone 3	0	139	131	124	119	113	109	104	97	87	79	72	66	62
	10	139	131	124	119	113	109	104	97	87	79	72	66	62
	20	127	127	124	119	113	109	104	97	87	79	72	66	62
	30	110	110	110	110	110	109	104	97	87	79	72	66	62
	40	98	98	98	98	98	98	98	97	87	79	72	66	62
	50	89	89	89	89	89	89	89	89	87	79	72	66	62
	60	82	82	82	82	82	82	82	82	82	79	72	66	62
	70	77	77	77	77	77	77	77	77	77	77	72	66	62
	80	72	72	72	72	72	72	72	72	72	72	72	66	62
	90	68	68	68	68	68	68	68	68	68	68	68	66	62

Notes:

1. Tables are based on critical rail span for load combinations as specified in chapter 2 of the ASCE 7-16 and allowable design loads per the 2015 Aluminum Design Manual.
2. Panels are assumed to be in landscape orientation with a maximum width of 42"

Structural ENGINUITY INC
Ingenuity in Engineering

SUNMODO®

Max Rail Spans for SunModo SMR200 Rail System

Table 143a

Mean Roof Height: 15 < h ≤ 30 ft
Roof Angle: 27 < θ ≤ 45 degrees
Exposure Category: C
Panel Orientation: Landscape
North/South Support Y_E = 1
Roof Type : Hip

Roof Wind Zone	Ground Snow Load (psf)	Wind Speed (mph)												
		90	95	100	105	110	115	120	130	140	150	160	170	180
Zone 1	0	139	139	139	139	138	133	128	119	112	105	100	94	87
	10	139	139	139	139	138	133	128	119	112	105	100	94	87
	20	127	127	127	127	126	125	124	119	112	105	100	94	87
	30	110	110	110	110	110	110	110	108	106	104	100	94	87
	40	98	98	98	98	98	98	98	98	97	95	93	92	87
	50	89	89	89	89	89	89	89	89	89	89	87	86	84
	60	82	82	82	82	82	82	82	82	82	82	82	81	79
	70	77	77	77	77	77	77	77	77	77	77	77	76	75
	80	72	72	72	72	72	72	72	72	72	72	72	72	72
	90	68	68	68	68	68	68	68	68	68	68	68	68	68
Zone 2e	0	139	139	139	139	134	128	123	114	106	100	93	85	79
	10	139	139	139	139	134	128	123	114	106	100	93	85	79
	20	127	127	127	127	126	125	123	114	106	100	93	85	79
	30	110	110	110	110	110	110	110	108	106	100	93	85	79
	40	98	98	98	98	98	98	98	98	97	95	93	85	79
	50	89	89	89	89	89	89	89	89	89	89	87	85	79
	60	82	82	82	82	82	82	82	82	82	82	82	81	79
	70	77	77	77	77	77	77	77	77	77	77	77	76	75
	80	72	72	72	72	72	72	72	72	72	72	72	72	72
	90	68	68	68	68	68	68	68	68	68	68	68	68	68
Zone 2r	0	139	134	127	122	117	112	108	101	93	85	78	72	67
	10	139	134	127	122	117	112	108	101	93	85	78	72	67
	20	127	127	127	122	117	112	108	101	93	85	78	72	67
	30	110	110	110	110	110	110	108	101	93	85	78	72	67
	40	98	98	98	98	98	98	98	98	93	85	78	72	67
	50	89	89	89	89	89	89	89	89	89	85	78	72	67
	60	82	82	82	82	82	82	82	82	82	82	78	72	67
	70	77	77	77	77	77	77	77	77	77	77	77	72	67
	80	72	72	72	72	72	72	72	72	72	72	72	72	67
	90	68	68	68	68	68	68	68	68	68	68	68	68	67
Zone 3	0	139	136	129	123	117	112	108	100	91	83	75	69	64
	10	139	136	129	123	117	112	108	100	91	83	75	69	64
	20	127	127	127	123	117	112	108	100	91	83	75	69	64
	30	110	110	110	110	110	110	108	100	91	83	75	69	64
	40	98	98	98	98	98	98	98	98	91	83	75	69	64
	50	89	89	89	89	89	89	89	89	89	83	75	69	64
	60	82	82	82	82	82	82	82	82	82	82	75	69	64
	70	77	77	77	77	77	77	77	77	77	77	75	69	64
	80	72	72	72	72	72	72	72	72	72	72	72	69	64
	90	68	68	68	68	68	68	68	68	68	68	68	68	64

Notes:

1. Tables are based on critical rail span for load combinations as specified in chapter 2 of the ASCE 7-16 and allowable design loads per the 2015 Aluminum Design Manual.
2. Panels are assumed to be in landscape orientation with a maximum width of 42"

Structural ENGINUITY INC
Ingenuity in Engineering

SUNMODO®

Max Rail Spans for SunModo SMR200 Rail System

Table 143b

Mean Roof Height: 15 < h ≤ 30 ft
Roof Angle: 27 < θ ≤ 45 degrees
Exposure Category: C
Panel Orientation: Landscape
North/South Support γ_E = 1.5
Roof Type : Hip

Roof Wind Zone	Ground Snow Load (psf)	Wind Speed (mph)												
		90	95	100	105	110	115	120	130	140	150	160	170	180
Zone 1	0	138	131	125	120	115	111	107	100	93	85	78	73	68
	10	138	131	125	120	115	111	107	100	93	85	78	73	68
	20	127	127	125	120	115	111	107	100	93	85	78	73	68
	30	110	110	110	110	110	110	107	100	93	85	78	73	68
	40	98	98	98	98	98	98	98	98	93	85	78	73	68
	50	89	89	89	89	89	89	89	89	89	85	78	73	68
	60	82	82	82	82	82	82	82	82	82	82	78	73	68
	70	77	77	77	77	77	77	77	77	77	77	77	73	68
	80	72	72	72	72	72	72	72	72	72	72	72	72	68
	90	68	68	68	68	68	68	68	68	68	68	68	68	68
Zone 2e	0	134	127	120	115	110	106	102	93	84	76	70	65	60
	10	134	127	120	115	110	106	102	93	84	76	70	65	60
	20	127	127	120	115	110	106	102	93	84	76	70	65	60
	30	110	110	110	110	110	106	102	93	84	76	70	65	60
	40	98	98	98	98	98	98	98	93	84	76	70	65	60
	50	89	89	89	89	89	89	89	89	84	76	70	65	60
	60	82	82	82	82	82	82	82	82	82	76	70	65	60
	70	77	77	77	77	77	77	77	77	77	76	70	65	60
	80	72	72	72	72	72	72	72	72	72	72	70	65	60
	90	68	68	68	68	68	68	68	68	68	68	68	65	60
Zone 2r	0	117	111	106	102	98	93	88	79	72	66	61	57	53
	10	117	111	106	102	98	93	88	79	72	66	61	57	53
	20	117	111	106	102	98	93	88	79	72	66	61	57	53
	30	110	110	106	102	98	93	88	79	72	66	61	57	53
	40	98	98	98	98	98	93	88	79	72	66	61	57	53
	50	89	89	89	89	89	89	88	79	72	66	61	57	53
	60	82	82	82	82	82	82	82	79	72	66	61	57	53
	70	77	77	77	77	77	77	77	77	72	66	61	57	53
	80	72	72	72	72	72	72	72	72	72	66	61	57	53
	90	68	68	68	68	68	68	68	68	68	66	61	57	53
Zone 3	0	117	111	106	101	97	91	85	76	68	63	58	54	50
	10	117	111	106	101	97	91	85	76	68	63	58	54	50
	20	117	111	106	101	97	91	85	76	68	63	58	54	50
	30	110	110	106	101	97	91	85	76	68	63	58	54	50
	40	98	98	98	98	97	91	85	76	68	63	58	54	50
	50	89	89	89	89	89	89	85	76	68	63	58	54	50
	60	82	82	82	82	82	82	82	76	68	63	58	54	50
	70	77	77	77	77	77	77	77	76	68	63	58	54	50
	80	72	72	72	72	72	72	72	72	68	63	58	54	50
	90	68	68	68	68	68	68	68	68	68	63	58	54	50

Notes:

1. Tables are based on critical rail span for load combinations as specified in chapter 2 of the ASCE 7-16 and allowable design loads per the 2015 Aluminum Design Manual.
2. Panels are assumed to be in landscape orientation with a maximum width of 42"

Structural ENGINUITY INC
Ingenuity in Engineering

SUNMODO®

Max Rail Spans for SunModo SMR200 Rail System

Table 144a

Mean Roof Height: 15 < h ≤ 30 ft
Roof Angle: 27 < θ ≤ 45 degrees
Exposure Category: D
Panel Orientation: Landscape
North/South Support Y_E = 1
Roof Type : Hip

Roof Wind Zone	Ground Snow Load (psf)	Wind Speed (mph)												
		90	95	100	105	110	115	120	130	140	150	160	170	180
Zone 1	0	139	139	139	133	128	123	119	111	104	98	91	84	79
	10	139	139	139	133	128	123	119	111	104	98	91	84	79
	20	127	127	126	125	124	122	119	111	104	98	91	84	79
	30	110	110	110	110	110	109	108	106	103	98	91	84	79
	40	98	98	98	98	98	98	98	97	95	93	91	84	79
	50	89	89	89	89	89	89	89	89	88	87	85	83	79
	60	82	82	82	82	82	82	82	82	82	81	80	79	77
	70	77	77	77	77	77	77	77	77	77	77	76	75	73
	80	72	72	72	72	72	72	72	72	72	72	72	71	70
	90	68	68	68	68	68	68	68	68	68	68	68	68	67
Zone 2e	0	139	139	135	129	123	118	113	105	98	90	82	76	70
	10	139	139	135	129	123	118	113	105	98	90	82	76	70
	20	127	127	126	125	123	118	113	105	98	90	82	76	70
	30	110	110	110	110	110	109	108	105	98	90	82	76	70
	40	98	98	98	98	98	98	98	97	95	90	82	76	70
	50	89	89	89	89	89	89	89	89	88	87	82	76	70
	60	82	82	82	82	82	82	82	82	82	81	80	76	70
	70	77	77	77	77	77	77	77	77	77	77	76	75	70
	80	72	72	72	72	72	72	72	72	72	72	72	71	70
	90	68	68	68	68	68	68	68	68	68	68	68	68	67
Zone 2r	0	130	124	118	113	108	104	100	92	84	76	70	65	61
	10	130	124	118	113	108	104	100	92	84	76	70	65	61
	20	127	124	118	113	108	104	100	92	84	76	70	65	61
	30	110	110	110	110	108	104	100	92	84	76	70	65	61
	40	98	98	98	98	98	98	98	92	84	76	70	65	61
	50	89	89	89	89	89	89	89	89	84	76	70	65	61
	60	82	82	82	82	82	82	82	82	82	76	70	65	61
	70	77	77	77	77	77	77	77	77	77	76	70	65	61
	80	72	72	72	72	72	72	72	72	72	72	70	65	61
	90	68	68	68	68	68	68	68	68	68	68	68	65	61
Zone 3	0	132	125	118	113	108	104	100	90	81	73	67	62	58
	10	132	125	118	113	108	104	100	90	81	73	67	62	58
	20	127	125	118	113	108	104	100	90	81	73	67	62	58
	30	110	110	110	110	108	104	100	90	81	73	67	62	58
	40	98	98	98	98	98	98	98	90	81	73	67	62	58
	50	89	89	89	89	89	89	89	89	81	73	67	62	58
	60	82	82	82	82	82	82	82	82	81	73	67	62	58
	70	77	77	77	77	77	77	77	77	77	73	67	62	58
	80	72	72	72	72	72	72	72	72	72	72	67	62	58
	90	68	68	68	68	68	68	68	68	68	68	67	62	58

Notes:

1. Tables are based on critical rail span for load combinations as specified in chapter 2 of the ASCE 7-16 and allowable design loads per the 2015 Aluminum Design Manual.
2. Panels are assumed to be in landscape orientation with a maximum width of 42"

Structural ENGINUITY INC
Ingenuity in Engineering

SUNMODO®

Max Rail Spans for SunModo SMR200 Rail System

Table 144b

Mean Roof Height: 15 < h ≤ 30 ft
Roof Angle: 27 < θ ≤ 45 degrees
Exposure Category: D
Panel Orientation: Landscape
North/South Support γ_E = 1.5
Roof Type : Hip

Roof Wind Zone	Ground Snow Load (psf)	Wind Speed (mph)												
		90	95	100	105	110	115	120	130	140	150	160	170	180
Zone 1	0	128	122	116	112	107	103	100	92	83	77	71	66	62
	10	128	122	116	112	107	103	100	92	83	77	71	66	62
	20	127	122	116	112	107	103	100	92	83	77	71	66	62
	30	110	110	110	110	107	103	100	92	83	77	71	66	62
	40	98	98	98	98	98	98	98	92	83	77	71	66	62
	50	89	89	89	89	89	89	89	89	83	77	71	66	62
	60	82	82	82	82	82	82	82	82	82	77	71	66	62
	70	77	77	77	77	77	77	77	77	77	77	71	66	62
	80	72	72	72	72	72	72	72	72	72	72	71	66	62
	90	68	68	68	68	68	68	68	68	68	68	68	66	62
Zone 2e	0	123	117	111	106	102	98	93	83	75	68	63	58	55
	10	123	117	111	106	102	98	93	83	75	68	63	58	55
	20	123	117	111	106	102	98	93	83	75	68	63	58	55
	30	110	110	110	106	102	98	93	83	75	68	63	58	55
	40	98	98	98	98	98	98	93	83	75	68	63	58	55
	50	89	89	89	89	89	89	89	83	75	68	63	58	55
	60	82	82	82	82	82	82	82	82	75	68	63	58	55
	70	77	77	77	77	77	77	77	77	75	68	63	58	55
	80	72	72	72	72	72	72	72	72	72	68	63	58	55
	90	68	68	68	68	68	68	68	68	68	68	63	58	55
Zone 2r	0	108	103	99	94	88	83	78	71	65	60	55	52	49
	10	108	103	99	94	88	83	78	71	65	60	55	52	49
	20	108	103	99	94	88	83	78	71	65	60	55	52	49
	30	108	103	99	94	88	83	78	71	65	60	55	52	49
	40	98	98	98	94	88	83	78	71	65	60	55	52	49
	50	89	89	89	89	88	83	78	71	65	60	55	52	49
	60	82	82	82	82	82	82	78	71	65	60	55	52	49
	70	77	77	77	77	77	77	77	71	65	60	55	52	49
	80	72	72	72	72	72	72	72	71	65	60	55	52	49
	90	68	68	68	68	68	68	68	68	65	60	55	52	49
Zone 3	0	108	102	98	91	85	80	75	67	61	57	52	49	45
	10	108	102	98	91	85	80	75	67	61	57	52	49	45
	20	108	102	98	91	85	80	75	67	61	57	52	49	45
	30	108	102	98	91	85	80	75	67	61	57	52	49	45
	40	98	98	98	91	85	80	75	67	61	57	52	49	45
	50	89	89	89	89	85	80	75	67	61	57	52	49	45
	60	82	82	82	82	82	80	75	67	61	57	52	49	45
	70	77	77	77	77	77	77	75	67	61	57	52	49	45
	80	72	72	72	72	72	72	72	67	61	57	52	49	45
	90	68	68	68	68	68	68	68	67	61	57	52	49	45

Notes:

1. Tables are based on critical rail span for load combinations as specified in chapter 2 of the ASCE 7-16 and allowable design loads per the 2015 Aluminum Design Manual.
2. Panels are assumed to be in landscape orientation with a maximum width of 42"