November 2, 2020

Attn: Mr. Peter Abou Chacra
SunModo
14800 NE 65th St.
Vancouver, WA 98682

RE: SunModo – SMR100 Rail
PV Panel Racking System
State of New Mexico Certification Letter

SEI Project No.: 19498.00

Dear Mr. Abou Chacra:

Structural Enginuity Inc. (SEI) has completed its review of the SunModo – SMR100 Rail System for typical installations of solar PV panels in the state of New Mexico. The SMR100 Rail is compliant with the sections of the following A design references and codes when installed per the conditions and design criteria delineated herein.

Design References and Codes:

- ASCE 7-16 – Minimum Design Loads for Buildings and Other Structures
- 2015 Aluminum Design Manual, by the Aluminum Association
- Materials information and section and details provided by SunModo as appendages to this letter
- 2018 International Building Code
- AC428, Acceptance Criteria for Modular Framing Systems Used to Support Photovoltaic (PV) Modules, November 2012 by ICC-ES

General Mounting System and Analysis Overview:

The SMR100 Rail consists of 6005-T5 (acceptable alternative materials include 6005A-T61 and 6061-T6) extruded aluminum per ASTM B221-08. The rails are used in pairs to support photovoltaic solar panels in order to span between points of attachment to the existing roof structure. The following tables and information summarize the structural analysis performed by SEI in order to certify the SMR100 Rail for the state noted above.

The analysis for certification included the following parameters for each rail system.

SMR100 Rail:

- Risk Category II
- Roof Slopes up to 45 degrees
- Portrait & Landscape orientation of photovoltaic panels
- Max Module Dimensions = Varies, see tables
- Max Mean Roof Height = Varies, see tables (If roof slope < 10°, use eave height)

- Wind Analysis:
  - Wind Category: B, C, and D
  - Roof Zones varies based on roof slope (See Tables)
  - Wind Directionality Factor (Kd) = 0.85
  - Topographic Factor (Kzt) = 1
  - Ground Elevation Factor (Ke): See table below
- Snow Analysis:
  - Snow Exposure Factor (Ce) = 1.0
  - Thermal Factor (Ct) = 1.0
  - Slope Factor (Cs) per ASCE 7-16, Figure 7.4-1
  - Importance Factor (Is) = 1
- Seismic Analysis:
  - Seismic Design Category E or less (Sds = 2.0 max)
  - Importance Factor (Ip) = 1
  - Amplification Factor (ap) = 1.0 per ICC-AC428
  - Component Response Modification Factor (Rp) = 1.5 per ICC-AC 428

Per ASCE 7-16, for locations above sea level, an additional Ground Elevation Factor may be accounted for. The provided tables take this into account by allowing the Wind Speed to be adjusted by a Wind Speed Velocity Multiplier as follows:

Wind Speed Velocity Multiplier based on Ground Elevation Factor (ASCE 7-16, Table 26.9-1)

Ground Elevation above Sea Level (ft), Z_g	**Ground Elevation Factor, K_e**	**Wind Speed Velocity Multiplier, Sqrt(K_e)**
0	1.00	**1.00**
1,000	0.96	**0.98**
2,000	0.93	**0.96**
3,000	0.90	**0.95**
4,000	0.86	**0.93**
5,000	0.83	**0.91**
6,000	0.80	**0.89**

Notes:

1. The Wind Speed Velocity Multiplier shall be determined from the above table using interpolation or from the following formula for all elevations:
   $$\text{Sqrt}(K_e) = \text{Sqrt}(e^{-0.0000362*Zg})$$
2. The Wind Speed Velocity Multiplier is permitted to be taken as 1.00 in all cases.
3. The wind speed in the project's region shall be multiplied by Wind Speed Velocity Multiplier. The resulting wind speed shall be rounded up to the nearest value provided in the span tables.
4. No interpolation between wind speeds is permitted.
5. Refer to ASCE 7-16 for additional information about the ground elevation factor and its use in determining velocity pressure per Equation 26.10-1.

ASCE 7-16 has several additional roof zones than previous codes. The zones are outlined in the code and diagrams have been provided below to show wind zone locations

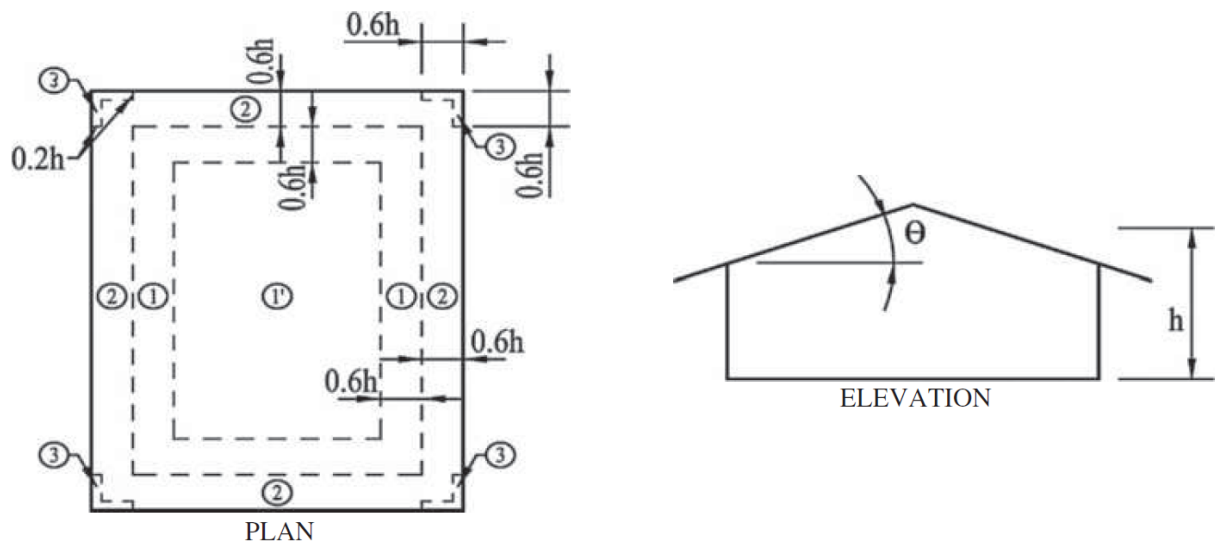

Figure 1: Roof Zones for Gable Roof Slopes Between 0 and 7 degrees

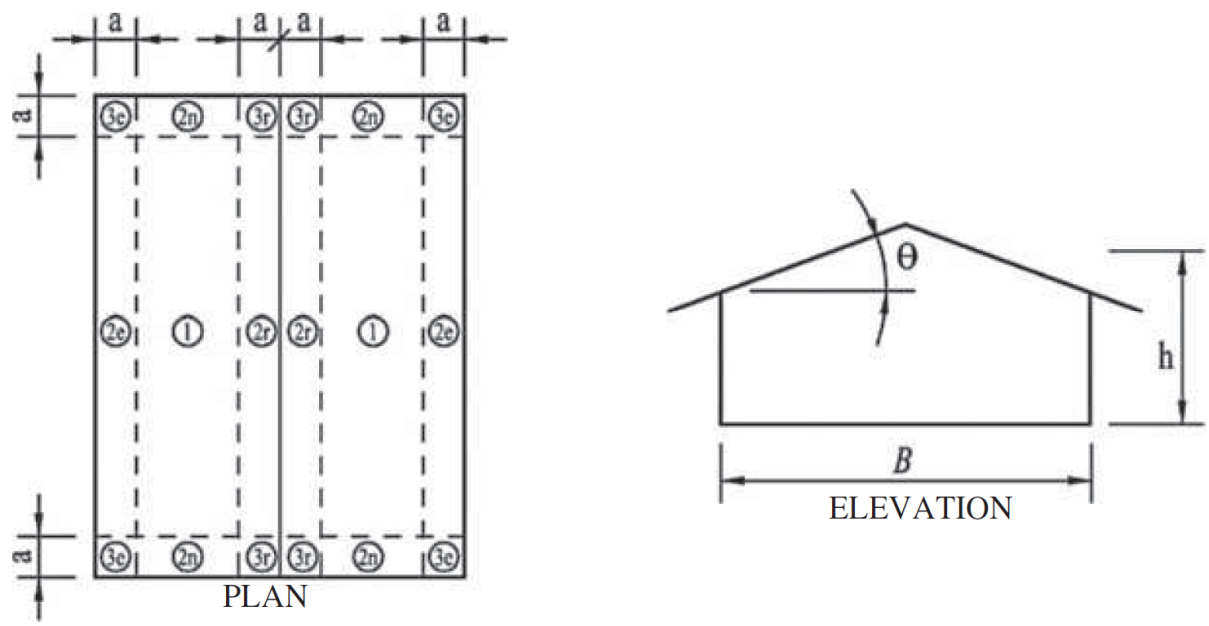

Figure 2: Roof Zones for Gable Roof Slopes Between 7 and 45 degrees

a = 10% of least horizontal dimension or 0.4h, whichever is smaller, but not less than either 4% of least horizontal dimension or 3 ft. If an overhang exists, the edge distance shall be measured from the outside edge of the overhang. The horizontal dimensions used to compute the edge distance shall not include the overhang distance.

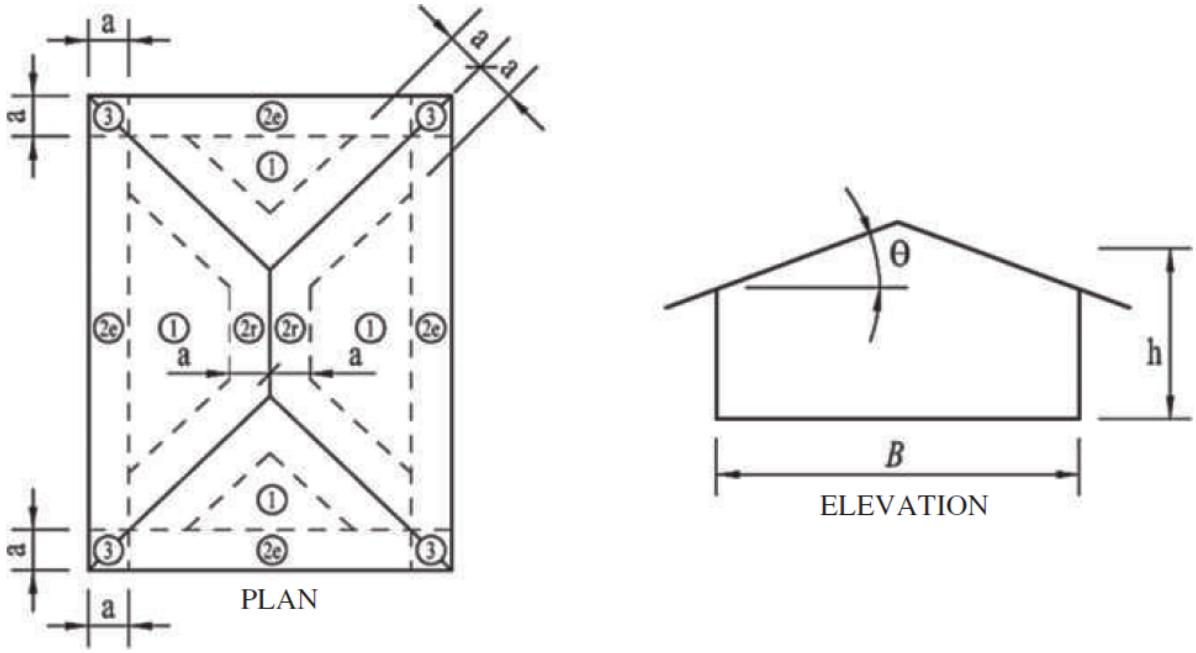

Figure 3: Roof Zones for Hip Roof Slopes Between 7 and 45 degrees

a = 10% of least horizontal dimension or 0.4h, whichever is smaller, but not less than either 4% of least horizontal dimension or 3 ft. If an overhang exists, the edge distance shall be measured from the outside edge of the overhang. The horizontal dimensions used to compute the edge distance shall not include the overhang distance.

For Hip Roofs with a roof slope between 7 and 20 degrees, tables are broken up between buildings with a height to width ratio (h/B) greater than 0.8 or less than 0.5. If the building the array is being mounted on falls between these values, compare both tables and choose the higher value.

Panels can be categorized as exposed or non-exposed based on their location within an array with exposed panels requiring the design wind load acting on them to be multiplied by an additional edge factor. Exposed panels are defined as panels within a distance of 1.5 times the panel chord length when the distance from the edge of the array to the roof edge is greater than 0.5 times the mean roof height and if either d_1 to an adjacent array is greater than 4 ft or d_2 to the next adjacent panel is greater than 4 ft as shown in Figure 4.

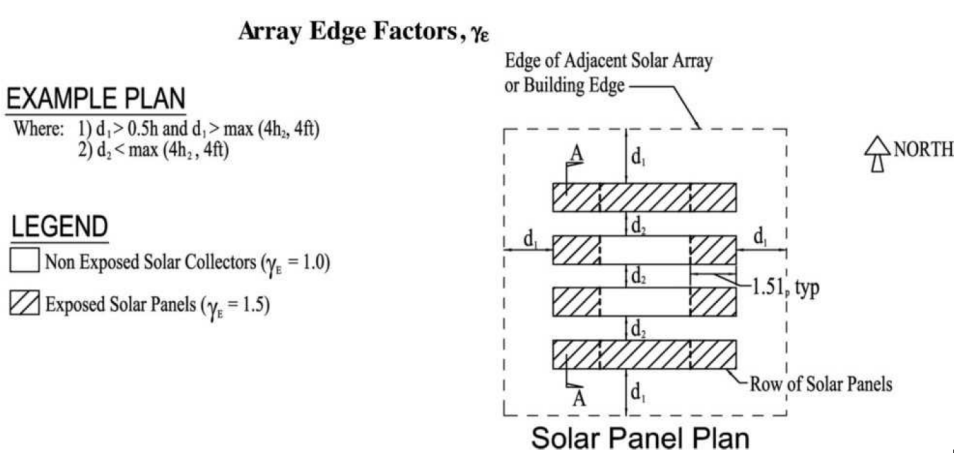

Figure 4: Array Edge Factors

Applicable loading combinations consisting of dead, wind, snow, and seismic loads in accordance with the governing code requirements were used to determine allowable rail span lengths, based on bending stress capacity, shear capacity, axial capacity, and an assumption of a single-span condition with an allowable deflection of L/60. Design wind pressures were determined using Components and Cladding calculations per ASCE 7-16, Chapters 26-30 in conjunction with the loading parameters noted above. Applicable roof snow load shall be based on ground snow load maps, equations, and factors of ASCE 7-16, Chapter 7 and applicable sections of the 2018 International Building Code for the location of the project in combination with the loading parameters noted above.

It should be noted that the analysis was limited to the capacity of the SMR100 Rail. Attachments of the rail to the roof structure and analysis of the roof structure itself shall be the responsibility of the installer and should be reviewed and approved by a registered design professional where required by the local authority having jurisdiction.

Installation Notes:

The SMR100 Rail shall be installed with the following guidelines to be in compliance with attached span tables:

- Tables noted below assume two support rails are being used per each row of photovoltaic modules in a roof solar array.
- Rails shall be continuous and not spliced over a minimum of 2 supports except for span lengths shaded with In these cases it is acceptable to use a minimum of 1 support per rail section as long as all supports are located at a maximum of 48” on center and the first and last rail sections have a minimum of 2 supports. Splices shall be made with SunModo’s structural splice.
- System shall be mounted parallel to roof surface with a 2” to 10” gap between roof surface and bottom of module.
- Installation over roof overhangs or within 10” of any roof edge is not recommended
- Maximum end cantilever of aluminum support rail shall not exceed 1/3 of allowable span in the roof wind pressure zone of the cantilever.
- Tables attached are limited to structural capability of the support rails only; therefore, observe all local jurisdiction requirements regarding roof setback requirements when laying out support rails and solar array.
- Actual span lengths used must be within capacity of roof attachment and structural capacity of roof member supporting solar array.

Structural ENGINUITY INC
Ingenuity in Engineering

Conclusion and Certification Summary:

Based on the structural analysis performed by SEI in regard to the loading parameters specified above for SMR100 Rail, the following Span Tables for the SunModo SMR100 Rail System were determined. The various span information is controlled by the applicable wind and snow loads to the structure to which the array is being mounted on the roof and based on the roof zone to which the array is installed on the roof. The tables allow for multiple panel sizes and orientations as outlined in the table of contents and on the headers of each table. The tables are organized as follows for each loading condition:

Table A: Non-exposed panels
Table B: Exposed panels

This letter is to certify that the loading criteria and design basis used for the structural analysis of the SMR100 Rail PV Panel Racking System for the span tables attached is validated and performed in compliance with the applicable design codes noted previously.

Please contact our office if you have any further questions relating to this matter.

Sincerely,

Peter Martin
Engineer III
pmartin@structuralenginuityinc.com

Mark A. Tryon, P.E.
Vice President/Founder
mtryon@structuralenginuityinc.com

Structural Enginuity Inc.

MARK ADAM TRYON
NEW MEXICO
22629
PROFESSIONAL ENGINEER

11/10/2020

Structural ENGINUITY INC
Ingenuity in Engineering

Table of Contents

60 Cell Module (Portrait Orientation, Max Length 67.5”)_____C1-C96
Mean Roof Height Less Than 15 Feet
-Gable Roof, Roof Slope Between 0 and 7 degrees_____C1-C6
-Gable Roof, Roof Slope Between 7 and 20 degrees_____C7-C12
-Gable Roof, Roof Slope Between 20 and 27 degrees_____C13-C18
-Gable Roof, Roof Slope Between 27 and 45 degrees_____C19-C24
-Hip Roof, Roof Slope Between 7 and 20 degrees (h/B ≥ 0.8)_____C25-C30
-Hip Roof, Roof Slope Between 7 and 20 degrees (h/B ≤ 0.5)_____C31-C36
-Hip Roof, Roof Slope Between 20 and 27 degrees_____C37-C42
-Hip Roof, Roof Slope Between 27 and 45 degrees_____C43-C48
Mean Roof Height Between 15 and 30 Feet
-Gable Roof, Roof Slope Between 0 and 7 degrees_____C49-C54
-Gable Roof, Roof Slope Between 7 and 20 degrees_____C55-C60
-Gable Roof, Roof Slope Between 20 and 27 degrees_____C61-C66
-Gable Roof, Roof Slope Between 27 and 45 degrees_____C67-C72
-Hip Roof, Roof Slope Between 7 and 20 degrees (h/B ≥ 0.8)_____C73-C78
-Hip Roof, Roof Slope Between 7 and 20 degrees (h/B ≤ 0.5)_____C79-C84
-Hip Roof, Roof Slope Between 20 and 27 degrees_____C85-C90
-Hip Roof, Roof Slope Between 27 and 45 degrees _____C91-C96

72 Cell Module (Portrait Orientation, Max Length 82”)_____C97-C192
Mean Roof Height Less Than 15 Feet
-Gable Roof, Roof Slope Between 0 and 7 degrees_____C97-C102
-Gable Roof, Roof Slope Between 7 and 20 degrees_____C103-C108
-Gable Roof, Roof Slope Between 20 and 27 degrees_____C109-C114
-Gable Roof, Roof Slope Between 27 and 45 degrees_____C115-C120
-Hip Roof, Roof Slope Between 7 and 20 degrees (h/B ≥ 0.8)_____C121-C126
-Hip Roof, Roof Slope Between 7 and 20 degrees (h/B ≤ 0.5)_____C127-C132
-Hip Roof, Roof Slope Between 20 and 27 degrees_____C133-C138
-Hip Roof, Roof Slope Between 27 and 45 degrees _____C139-C144
Mean Roof Height Between 15 and 30 Feet
-Gable Roof, Roof Slope Between 0 and 7 degrees_____C145-C150
-Gable Roof, Roof Slope Between 7 and 20 degrees_____C151-C156
-Gable Roof, Roof Slope Between 20 and 27 degrees_____C157-C162
-Gable Roof, Roof Slope Between 27 and 45 degrees_____C163-C168
-Hip Roof, Roof Slope Between 7 and 20 degrees (h/B ≥ 0.8)_____C169-C174
-Hip Roof, Roof Slope Between 7 and 20 degrees (h/B ≤ 0.5)_____C175-C180
-Hip Roof, Roof Slope Between 20 and 27 degrees_____C181-C186
-Hip Roof, Roof Slope Between 27 and 45 degrees_____C187-C192

1815 W. Diehl Rd, Suite 100, Naperville, IL 60563
630-219-1997 (P)
www.structuralenginuityinc.com

Table of Contents Continued

Module in Landscape Orientation (Max Width 42”)_____C193-C288
Mean Roof Height Less Than 15 Feet
-Gable Roof, Roof Slope Between 0 and 7 degrees_____C193-C198
-Gable Roof, Roof Slope Between 7 and 20 degrees_____C199-C204
-Gable Roof, Roof Slope Between 20 and 27 degrees_____C205-C210
-Gable Roof, Roof Slope Between 27 and 45 degrees_____C211-C216
-Hip Roof, Roof Slope Between 7 and 20 degrees (h/B ≥ 0.8)_____C217-C222
-Hip Roof, Roof Slope Between 7 and 20 degrees (h/B ≤ 0.5)_____C223-C228
-Hip Roof, Roof Slope Between 20 and 27 degrees_____C229-C234
-Hip Roof, Roof Slope Between 27 and 45 degrees_____C235-C240
Mean Roof Height Between 15 and 30 Feet
-Gable Roof, Roof Slope Between 0 and 7 degrees_____C241-C246
-Gable Roof, Roof Slope Between 7 and 20 degrees_____C247-C252
-Gable Roof, Roof Slope Between 20 and 27 degrees_____C253-C258
-Gable Roof, Roof Slope Between 27 and 45 degrees_____C259-C264
-Hip Roof, Roof Slope Between 7 and 20 degrees (h/B ≥ 0.8)_____C265-C270
-Hip Roof, Roof Slope Between 7 and 20 degrees (h/B ≤ 0.5)_____C271-C276
-Hip Roof, Roof Slope Between 20 and 27 degrees_____C277-C282
-Hip Roof, Roof Slope Between 27 and 45 degrees_____C283-C288

Structural ENGINUITY INC
Ingenuity in Engineering

SUNMODO®

Max Rail Spans for SunModo SMR100 System

Table 1a

Mean Roof Height: h ≤ 15 ft
Roof Angle: 0 < θ ≤ 7 degrees
Exposure Category: B

Panel Orientation: Portrait
North/South Support γ_E = 1
Roof Type : Gable

Roof Wind Zone	Ground Snow Load (psf)	Wind Speed (mph)												
		90	95	100	105	110	115	120	130	140	150	160	170	180
Zone 1'	0	101	101	101	101	101	101	101	101	101	101	101	101	101
	10	87	87	87	87	87	87	87	87	87	87	87	87	87
	20	69	69	69	69	69	69	69	69	69	69	69	69	69
	30	68	68	68	68	68	68	68	68	68	68	68	68	68
	40	60	60	60	60	60	60	60	60	60	60	60	60	60
	50	54	54	54	54	54	54	54	54	54	54	54	54	54
	60	50	50	50	50	50	50	50	50	50	50	50	50	50
	70	46	46	46	46	46	46	46	46	46	46	46	46	46
	80	44	44	44	44	44	44	44	44	44	44	44	44	44
	90	41	41	41	41	41	41	41	41	41	41	41	41	41
Zone 1	0	101	101	101	101	101	101	101	101	100	94	87	80	74
	10	87	87	87	87	87	87	87	87	87	87	87	80	74
	20	69	69	69	69	69	69	69	69	69	69	69	69	69
	30	68	68	68	68	68	68	68	68	68	68	68	68	68
	40	60	60	60	60	60	60	60	60	60	60	60	60	60
	50	54	54	54	54	54	54	54	54	54	54	54	54	54
	60	50	50	50	50	50	50	50	50	50	50	50	50	50
	70	46	46	46	46	46	46	46	46	46	46	46	46	46
	80	44	44	44	44	44	44	44	44	44	44	44	44	44
	90	41	41	41	41	41	41	41	41	41	41	41	41	41
Zone 2	0	101	101	101	101	101	101	100	93	85	77	70	65	60
	10	87	87	87	87	87	87	87	87	85	77	70	65	60
	20	69	69	69	69	69	69	69	69	69	69	69	65	60
	30	68	68	68	68	68	68	68	68	68	68	68	65	60
	40	60	60	60	60	60	60	60	60	60	60	60	60	60
	50	54	54	54	54	54	54	54	54	54	54	54	54	54
	60	50	50	50	50	50	50	50	50	50	50	50	50	50
	70	46	46	46	46	46	46	46	46	46	46	46	46	46
	80	44	44	44	44	44	44	44	44	44	44	44	44	44
	90	41	41	41	41	41	41	41	41	41	41	41	41	41
Zone 3	0	101	101	101	99	95	91	85	76	68	62	57	53	49
	10	87	87	87	87	87	87	85	76	68	62	57	53	49
	20	69	69	69	69	69	69	69	69	68	62	57	53	49
	30	68	68	68	68	68	68	68	68	68	62	57	53	49
	40	60	60	60	60	60	60	60	60	60	60	57	53	49
	50	54	54	54	54	54	54	54	54	54	54	54	53	49
	60	50	50	50	50	50	50	50	50	50	50	50	50	49
	70	46	46	46	46	46	46	46	46	46	46	46	46	46
	80	44	44	44	44	44	44	44	44	44	44	44	44	44
	90	41	41	41	41	41	41	41	41	41	41	41	41	41

Notes:

1. Tables are based on critical rail span for load combinations as specified in chapter 2 of the ASCE 7-16 and allowable design loads per the 2015 Aluminum Design Manual.
2. Panels are assumed to be in portrait orientation with a maximum length of 67.5"

Structural ENGINUITY INC
Ingenuity in Engineering

SUNMODO®

Max Rail Spans for SunModo SMR100 System

Table 1b

Mean Roof Height: h ≤ 15 ft
Roof Angle: 0 < θ ≤ 7 degrees
Exposure Category: B

Panel Orientation: Portrait
North/South Support γ_E = 1.5
Roof Type : Gable

Roof Wind Zone	Ground Snow Load (psf)	Wind Speed (mph)												
		90	95	100	105	110	115	120	130	140	150	160	170	180
Zone 1'	0	101	101	101	101	101	101	101	101	101	100	94	89	82
	10	87	87	87	87	87	87	87	87	87	87	87	87	82
	20	69	69	69	69	69	69	69	69	69	69	69	69	69
	30	68	68	68	68	68	68	68	68	68	68	68	68	68
	40	60	60	60	60	60	60	60	60	60	60	60	60	60
	50	54	54	54	54	54	54	54	54	54	54	54	54	54
	60	50	50	50	50	50	50	50	50	50	50	50	50	50
	70	46	46	46	46	46	46	46	46	46	46	46	46	46
	80	44	44	44	44	44	44	44	44	44	44	44	44	44
	90	41	41	41	41	41	41	41	41	41	41	41	41	41
Zone 1	0	101	101	101	101	101	99	95	88	79	72	66	61	56
	10	87	87	87	87	87	87	87	87	79	72	66	61	56
	20	69	69	69	69	69	69	69	69	69	69	66	61	56
	30	68	68	68	68	68	68	68	68	68	68	66	61	56
	40	60	60	60	60	60	60	60	60	60	60	60	60	56
	50	54	54	54	54	54	54	54	54	54	54	54	54	54
	60	50	50	50	50	50	50	50	50	50	50	50	50	50
	70	46	46	46	46	46	46	46	46	46	46	46	46	46
	80	44	44	44	44	44	44	44	44	44	44	44	44	44
	90	41	41	41	41	41	41	41	41	41	41	41	41	41
Zone 2	0	101	101	98	94	89	84	79	71	64	58	54	50	46
	10	87	87	87	87	87	84	79	71	64	58	54	50	46
	20	69	69	69	69	69	69	69	69	64	58	54	50	46
	30	68	68	68	68	68	68	68	68	64	58	54	50	46
	40	60	60	60	60	60	60	60	60	60	58	54	50	46
	50	54	54	54	54	54	54	54	54	54	54	54	50	46
	60	50	50	50	50	50	50	50	50	50	50	50	50	46
	70	46	46	46	46	46	46	46	46	46	46	46	46	46
	80	44	44	44	44	44	44	44	44	44	44	44	44	44
	90	41	41	41	41	41	41	41	41	41	41	41	41	41
Zone 3	0	94	89	83	77	72	68	64	57	52	47	44	41	38
	10	87	87	83	77	72	68	64	57	52	47	44	41	38
	20	69	69	69	69	69	68	64	57	52	47	44	41	38
	30	68	68	68	68	68	68	64	57	52	47	44	41	38
	40	60	60	60	60	60	60	60	57	52	47	44	41	38
	50	54	54	54	54	54	54	54	54	52	47	44	41	38
	60	50	50	50	50	50	50	50	50	50	47	44	41	38
	70	46	46	46	46	46	46	46	46	46	46	44	41	38
	80	44	44	44	44	44	44	44	44	44	44	44	41	38
	90	41	41	41	41	41	41	41	41	41	41	41	41	38

Notes:

1. Tables are based on critical rail span for load combinations as specified in chapter 2 of the ASCE 7-16 and allowable design loads per the 2015 Aluminum Design Manual.
2. Panels are assumed to be in portrait orientation with a maximum length of 67.5"

Structural ENGINUITY INC
Ingenuity in Engineering

SUNMODO®

Max Rail Spans for SunModo SMR100 System

Table 2a

Mean Roof Height: h ≤ 15 ft
Roof Angle: 0 < θ ≤ 7 degrees
Exposure Category: C

Panel Orientation: Portrait
North/South Support γ_E = 1
Roof Type : Gable

Roof Wind Zone	Ground Snow Load (psf)	Wind Speed (mph)												
		90	95	100	105	110	115	120	130	140	150	160	170	180
Zone 1'	0	101	101	101	101	101	101	101	101	101	100	95	89	83
	10	87	87	87	87	87	87	87	87	87	87	87	87	83
	20	69	69	69	69	69	69	69	69	69	69	69	69	69
	30	68	68	68	68	68	68	68	68	68	68	68	68	68
	40	60	60	60	60	60	60	60	60	60	60	60	60	60
	50	54	54	54	54	54	54	54	54	54	54	54	54	54
	60	50	50	50	50	50	50	50	50	50	50	50	50	50
	70	46	46	46	46	46	46	46	46	46	46	46	46	46
	80	44	44	44	44	44	44	44	44	44	44	44	44	44
	90	41	41	41	41	41	41	41	41	41	41	41	41	41
Zone 1	0	101	101	101	101	101	100	96	88	79	72	66	61	56
	10	87	87	87	87	87	87	87	87	79	72	66	61	56
	20	69	69	69	69	69	69	69	69	69	69	66	61	56
	30	68	68	68	68	68	68	68	68	68	68	66	61	56
	40	60	60	60	60	60	60	60	60	60	60	60	60	56
	50	54	54	54	54	54	54	54	54	54	54	54	54	54
	60	50	50	50	50	50	50	50	50	50	50	50	50	50
	70	46	46	46	46	46	46	46	46	46	46	46	46	46
	80	44	44	44	44	44	44	44	44	44	44	44	44	44
	90	41	41	41	41	41	41	41	41	41	41	41	41	41
Zone 2	0	101	101	98	94	90	84	79	71	64	59	54	50	46
	10	87	87	87	87	87	84	79	71	64	59	54	50	46
	20	69	69	69	69	69	69	69	69	64	59	54	50	46
	30	68	68	68	68	68	68	68	68	64	59	54	50	46
	40	60	60	60	60	60	60	60	60	60	59	54	50	46
	50	54	54	54	54	54	54	54	54	54	54	54	50	46
	60	50	50	50	50	50	50	50	50	50	50	50	50	46
	70	46	46	46	46	46	46	46	46	46	46	46	46	46
	80	44	44	44	44	44	44	44	44	44	44	44	44	44
	90	41	41	41	41	41	41	41	41	41	41	41	41	41
Zone 3	0	95	90	83	77	72	68	64	58	52	48	44	41	38
	10	87	87	83	77	72	68	64	58	52	48	44	41	38
	20	69	69	69	69	69	68	64	58	52	48	44	41	38
	30	68	68	68	68	68	68	64	58	52	48	44	41	38
	40	60	60	60	60	60	60	60	58	52	48	44	41	38
	50	54	54	54	54	54	54	54	54	52	48	44	41	38
	60	50	50	50	50	50	50	50	50	50	48	44	41	38
	70	46	46	46	46	46	46	46	46	46	46	44	41	38
	80	44	44	44	44	44	44	44	44	44	44	44	41	38
	90	41	41	41	41	41	41	41	41	41	41	41	41	38

Notes:

1. Tables are based on critical rail span for load combinations as specified in chapter 2 of the ASCE 7-16 and allowable design loads per the 2015 Aluminum Design Manual.
2. Panels are assumed to be in portrait orientation with a maximum length of 67.5"

Structural ENGINUITY INC
Ingenuity in Engineering

SUNMODO®

Max Rail Spans for SunModo SMR100 System

Table 2b

Mean Roof Height: h ≤ 15 ft
Roof Angle: 0 < θ ≤ 7 degrees
Exposure Category: C

Panel Orientation: Portrait
North/South Support γ_E = 1.5
Roof Type : Gable

Roof Wind Zone	Ground Snow Load (psf)	Wind Speed (mph)												
		90	95	100	105	110	115	120	130	140	150	160	170	180
Zone 1'	0	101	101	101	101	101	101	101	95	88	80	74	68	64
	10	87	87	87	87	87	87	87	87	87	80	74	68	64
	20	69	69	69	69	69	69	69	69	69	69	69	68	64
	30	68	68	68	68	68	68	68	68	68	68	68	68	64
	40	60	60	60	60	60	60	60	60	60	60	60	60	60
	50	54	54	54	54	54	54	54	54	54	54	54	54	54
	60	50	50	50	50	50	50	50	50	50	50	50	50	50
	70	46	46	46	46	46	46	46	46	46	46	46	46	46
	80	44	44	44	44	44	44	44	44	44	44	44	44	44
	90	41	41	41	41	41	41	41	41	41	41	41	41	41
Zone 1	0	101	99	94	89	84	78	74	66	60	55	51	47	44
	10	87	87	87	87	84	78	74	66	60	55	51	47	44
	20	69	69	69	69	69	69	69	66	60	55	51	47	44
	30	68	68	68	68	68	68	68	66	60	55	51	47	44
	40	60	60	60	60	60	60	60	60	60	55	51	47	44
	50	54	54	54	54	54	54	54	54	54	54	51	47	44
	60	50	50	50	50	50	50	50	50	50	50	50	47	44
	70	46	46	46	46	46	46	46	46	46	46	46	46	44
	80	44	44	44	44	44	44	44	44	44	44	44	44	44
	90	41	41	41	41	41	41	41	41	41	41	41	41	41
Zone 2	0	89	83	77	72	68	64	60	54	49	45	42	39	37
	10	87	83	77	72	68	64	60	54	49	45	42	39	37
	20	69	69	69	69	68	64	60	54	49	45	42	39	37
	30	68	68	68	68	68	64	60	54	49	45	42	39	37
	40	60	60	60	60	60	60	60	54	49	45	42	39	37
	50	54	54	54	54	54	54	54	54	49	45	42	39	37
	60	50	50	50	50	50	50	50	50	49	45	42	39	37
	70	46	46	46	46	46	46	46	46	46	45	42	39	37
	80	44	44	44	44	44	44	44	44	44	44	42	39	37
	90	41	41	41	41	41	41	41	41	41	41	41	39	37
Zone 3	0	72	67	62	58	55	52	49	44	40	38	35	33	31
	10	72	67	62	58	55	52	49	44	40	38	35	33	31
	20	69	67	62	58	55	52	49	44	40	38	35	33	31
	30	68	67	62	58	55	52	49	44	40	38	35	33	31
	40	60	60	60	58	55	52	49	44	40	38	35	33	31
	50	54	54	54	54	54	52	49	44	40	38	35	33	31
	60	50	50	50	50	50	50	49	44	40	38	35	33	31
	70	46	46	46	46	46	46	46	44	40	38	35	33	31
	80	44	44	44	44	44	44	44	44	40	38	35	33	31
	90	41	41	41	41	41	41	41	41	40	38	35	33	31

Notes:

1. Tables are based on critical rail span for load combinations as specified in chapter 2 of the ASCE 7-16 and allowable design loads per the 2015 Aluminum Design Manual.
2. Panels are assumed to be in portrait orientation with a maximum length of 67.5"

Structural ENGINUITY INC
Ingenuity in Engineering

SUNMODO®

Max Rail Spans for SunModo SMR100 System

Table 3a

Mean Roof Height: h ≤ 15 ft
Roof Angle: 0 < θ ≤ 7 degrees
Exposure Category: D

Panel Orientation: Portrait
North/South Support γ_E = 1
Roof Type : Gable

Roof Wind Zone	Ground Snow Load (psf)	Wind Speed (mph)												
		90	95	100	105	110	115	120	130	140	150	160	170	180
Zone 1'	0	101	101	101	101	101	101	101	101	98	92	85	78	73
	10	87	87	87	87	87	87	87	87	87	87	85	78	73
	20	69	69	69	69	69	69	69	69	69	69	69	69	68
	30	68	68	68	68	68	68	68	68	68	68	68	68	67
	40	60	60	60	60	60	60	60	60	60	60	60	60	60
	50	54	54	54	54	54	54	54	54	54	54	54	54	54
	60	50	50	50	50	50	50	50	50	50	50	50	50	50
	70	46	46	46	46	46	46	46	46	46	46	46	46	46
	80	44	44	44	44	44	44	44	44	44	44	44	44	44
	90	41	41	41	41	41	41	41	41	41	41	41	41	41
Zone 1	0	101	101	101	99	95	91	86	77	69	63	58	54	50
	10	87	87	87	87	87	87	86	77	69	63	58	54	50
	20	69	69	69	69	69	69	69	69	69	63	58	54	50
	30	68	68	68	68	68	68	68	68	68	63	58	54	50
	40	60	60	60	60	60	60	60	60	60	60	58	54	50
	50	54	54	54	54	54	54	54	54	54	54	54	54	50
	60	50	50	50	50	50	50	50	50	50	50	50	50	50
	70	46	46	46	46	46	46	46	46	46	46	46	46	46
	80	44	44	44	44	44	44	44	44	44	44	44	44	44
	90	41	41	41	41	41	41	41	41	41	41	41	41	41
Zone 2	0	99	94	90	84	78	74	69	62	57	52	48	44	41
	10	87	87	87	84	78	74	69	62	57	52	48	44	41
	20	69	69	69	69	69	69	69	62	57	52	48	44	41
	30	68	68	68	68	68	68	68	62	57	52	48	44	41
	40	60	60	60	60	60	60	60	60	57	52	48	44	41
	50	54	54	54	54	54	54	54	54	54	52	48	44	41
	60	50	50	50	50	50	50	50	50	50	50	48	44	41
	70	46	46	46	46	46	46	46	46	46	46	46	44	41
	80	44	44	44	44	44	44	44	44	44	44	44	44	41
	90	41	41	41	41	41	41	41	41	41	41	41	41	41
Zone 3	0	84	78	72	68	63	60	56	51	46	42	39	37	35
	10	84	78	72	68	63	60	56	51	46	42	39	37	35
	20	69	69	69	68	63	60	56	51	46	42	39	37	35
	30	68	68	68	68	63	60	56	51	46	42	39	37	35
	40	60	60	60	60	60	60	56	51	46	42	39	37	35
	50	54	54	54	54	54	54	54	51	46	42	39	37	35
	60	50	50	50	50	50	50	50	50	46	42	39	37	35
	70	46	46	46	46	46	46	46	46	46	42	39	37	35
	80	44	44	44	44	44	44	44	44	44	42	39	37	35
	90	41	41	41	41	41	41	41	41	41	41	39	37	35

Notes:

1. Tables are based on critical rail span for load combinations as specified in chapter 2 of the ASCE 7-16 and allowable design loads per the 2015 Aluminum Design Manual.
2. Panels are assumed to be in portrait orientation with a maximum length of 67.5"

Structural ENGINUITY INC
Ingenuity in Engineering

SUNMODO®

Max Rail Spans for SunModo SMR100 System

Table 3b

Mean Roof Height: h ≤ 15 ft
Roof Angle: 0 < θ ≤ 7 degrees
Exposure Category: D

Panel Orientation: Portrait
North/South Support γ_E = 1.5
Roof Type : Gable

Roof Wind Zone	Ground Snow Load (psf)	Wind Speed (mph)												
		90	95	100	105	110	115	120	130	140	150	160	170	180
Zone 1'	0	101	101	101	101	101	97	94	86	78	71	66	61	57
	10	87	87	87	87	87	87	87	86	78	71	66	61	57
	20	69	69	69	69	69	69	69	69	69	69	66	61	57
	30	68	68	68	68	68	68	68	68	68	68	66	61	57
	40	60	60	60	60	60	60	60	60	60	60	60	60	57
	50	54	54	54	54	54	54	54	54	54	54	54	54	54
	60	50	50	50	50	50	50	50	50	50	50	50	50	50
	70	46	46	46	46	46	46	46	46	46	46	46	46	46
	80	44	44	44	44	44	44	44	44	44	44	44	44	44
	90	41	41	41	41	41	41	41	41	41	41	41	41	41
Zone 1	0	95	90	83	78	73	69	65	58	53	49	45	42	39
	10	87	87	83	78	73	69	65	58	53	49	45	42	39
	20	69	69	69	69	69	69	65	58	53	49	45	42	39
	30	68	68	68	68	68	68	65	58	53	49	45	42	39
	40	60	60	60	60	60	60	60	58	53	49	45	42	39
	50	54	54	54	54	54	54	54	54	53	49	45	42	39
	60	50	50	50	50	50	50	50	50	50	49	45	42	39
	70	46	46	46	46	46	46	46	46	46	46	45	42	39
	80	44	44	44	44	44	44	44	44	44	44	44	42	39
	90	41	41	41	41	41	41	41	41	41	41	41	41	39
Zone 2	0	78	72	68	63	60	56	53	48	44	40	38	36	33
	10	78	72	68	63	60	56	53	48	44	40	38	36	33
	20	69	69	68	63	60	56	53	48	44	40	38	36	33
	30	68	68	68	63	60	56	53	48	44	40	38	36	33
	40	60	60	60	60	60	56	53	48	44	40	38	36	33
	50	54	54	54	54	54	54	53	48	44	40	38	36	33
	60	50	50	50	50	50	50	50	48	44	40	38	36	33
	70	46	46	46	46	46	46	46	46	44	40	38	36	33
	80	44	44	44	44	44	44	44	44	44	40	38	36	33
	90	41	41	41	41	41	41	41	41	41	40	38	36	33
Zone 3	0	63	59	55	51	48	46	43	40	37	34	32	30	28
	10	63	59	55	51	48	46	43	40	37	34	32	30	28
	20	63	59	55	51	48	46	43	40	37	34	32	30	28
	30	63	59	55	51	48	46	43	40	37	34	32	30	28
	40	60	59	55	51	48	46	43	40	37	34	32	30	28
	50	54	54	54	51	48	46	43	40	37	34	32	30	28
	60	50	50	50	50	48	46	43	40	37	34	32	30	28
	70	46	46	46	46	46	46	43	40	37	34	32	30	28
	80	44	44	44	44	44	44	43	40	37	34	32	30	28
	90	41	41	41	41	41	41	41	40	37	34	32	30	28

Notes:

1. Tables are based on critical rail span for load combinations as specified in chapter 2 of the ASCE 7-16 and allowable design loads per the 2015 Aluminum Design Manual.
2. Panels are assumed to be in portrait orientation with a maximum length of 67.5"

Structural ENGINUITY INC
Ingenuity in Engineering

SUNMODO®

Max Rail Spans for SunModo SMR100 System

Table 4a

Mean Roof Height: h ≤ 15 ft
Roof Angle: 7 < θ ≤ 20 degrees
Exposure Category: B

Panel Orientation: Portrait
North/South Support γ_E = 1
Roof Type : Gable

Roof Wind Zone	Ground Snow Load (psf)	Wind Speed (mph)												
		90	95	100	105	110	115	120	130	140	150	160	170	180
Zones 1 & 2e	0	101	101	101	101	101	101	101	98	90	82	75	69	65
	10	80	80	80	80	80	80	80	80	80	80	75	69	65
	20	62	62	62	62	62	62	62	62	62	62	62	62	62
	30	62	62	62	62	62	62	62	62	62	62	62	62	62
	40	55	55	55	55	55	55	55	55	55	55	55	55	55
	50	50	50	50	50	50	50	50	50	50	50	50	50	50
	60	46	46	46	46	46	46	46	46	46	46	46	46	46
	70	43	43	43	43	43	43	43	43	43	43	43	43	43
	80	40	40	40	40	40	40	40	40	40	40	40	40	40
	90	38	38	38	38	38	38	38	38	38	38	38	38	38
Zones 2n, 2r, & 3e	0	101	101	101	101	100	96	92	83	74	67	61	56	52
	10	80	80	80	80	80	80	80	80	74	67	61	56	52
	20	62	62	62	62	62	62	62	62	62	62	61	56	52
	30	62	62	62	62	62	62	62	62	62	62	61	56	52
	40	55	55	55	55	55	55	55	55	55	55	55	55	52
	50	50	50	50	50	50	50	50	50	50	50	50	50	50
	60	46	46	46	46	46	46	46	46	46	46	46	46	46
	70	43	43	43	43	43	43	43	43	43	43	43	43	43
	80	40	40	40	40	40	40	40	40	40	40	40	40	40
	90	38	38	38	38	38	38	38	38	38	38	38	38	38
Zone 3r	0	101	101	101	96	92	88	82	73	65	59	54	49	45
	10	80	80	80	80	80	80	80	73	65	59	54	49	45
	20	62	62	62	62	62	62	62	62	62	59	54	49	45
	30	62	62	62	62	62	62	62	62	62	59	54	49	45
	40	55	55	55	55	55	55	55	55	55	55	54	49	45
	50	50	50	50	50	50	50	50	50	50	50	50	49	45
	60	46	46	46	46	46	46	46	46	46	46	46	46	45
	70	43	43	43	43	43	43	43	43	43	43	43	43	43
	80	40	40	40	40	40	40	40	40	40	40	40	40	40
	90	38	38	38	38	38	38	38	38	38	38	38	38	38

Notes:

1. Tables are based on critical rail span for load combinations as specified in chapter 2 of the ASCE 7-16 and allowable design loads per the 2015 Aluminum Design Manual.
2. Panels are assumed to be in portrait orientation with a maximum length of 67.5"

Structural ENGINUITY INC
Ingenuity in Engineering

SUNMODO®

Max Rail Spans for SunModo SMR100 System

Table 4b

Mean Roof Height: h ≤ 15 ft
Roof Angle: 7 < θ ≤ 20 degrees
Exposure Category: B

Panel Orientation: Portrait
North/South Support γ_E = 1.5
Roof Type : Gable

Roof Wind Zone	Ground Snow Load (psf)	Wind Speed (mph)												
		90	95	100	105	110	115	120	130	140	150	160	170	180
Zones 1 & 2e	0	101	101	101	99	94	90	84	75	69	63	58	54	50
	10	80	80	80	80	80	80	80	75	69	63	58	54	50
	20	62	62	62	62	62	62	62	62	62	62	58	54	50
	30	62	62	62	62	62	62	62	62	62	62	58	54	50
	40	55	55	55	55	55	55	55	55	55	55	55	54	50
	50	50	50	50	50	50	50	50	50	50	50	50	50	50
	60	46	46	46	46	46	46	46	46	46	46	46	46	46
	70	43	43	43	43	43	43	43	43	43	43	43	43	43
	80	40	40	40	40	40	40	40	40	40	40	40	40	40
	90	38	38	38	38	38	38	38	38	38	38	38	38	38
Zones 2n, 2r, & 3e	0	100	95	90	85	79	74	69	61	55	50	46	42	40
	10	80	80	80	80	79	74	69	61	55	50	46	42	40
	20	62	62	62	62	62	62	62	61	55	50	46	42	40
	30	62	62	62	62	62	62	62	61	55	50	46	42	40
	40	55	55	55	55	55	55	55	55	55	50	46	42	40
	50	50	50	50	50	50	50	50	50	50	50	46	42	40
	60	46	46	46	46	46	46	46	46	46	46	46	42	40
	70	43	43	43	43	43	43	43	43	43	43	43	42	40
	80	40	40	40	40	40	40	40	40	40	40	40	40	40
	90	38	38	38	38	38	38	38	38	38	38	38	38	38
Zone 3r	0	92	87	80	74	69	64	61	54	49	44	41	38	36
	10	80	80	80	74	69	64	61	54	49	44	41	38	36
	20	62	62	62	62	62	62	61	54	49	44	41	38	36
	30	62	62	62	62	62	62	61	54	49	44	41	38	36
	40	55	55	55	55	55	55	55	54	49	44	41	38	36
	50	50	50	50	50	50	50	50	50	49	44	41	38	36
	60	46	46	46	46	46	46	46	46	46	44	41	38	36
	70	43	43	43	43	43	43	43	43	43	43	41	38	36
	80	40	40	40	40	40	40	40	40	40	40	40	38	36
	90	38	38	38	38	38	38	38	38	38	38	38	38	36

Notes:

1. Tables are based on critical rail span for load combinations as specified in chapter 2 of the ASCE 7-16 and allowable design loads per the 2015 Aluminum Design Manual.
2. Panels are assumed to be in portrait orientation with a maximum length of 67.5"

Structural ENGINUITY INC
Ingenuity in Engineering

SUNMODO®

Max Rail Spans for SunModo SMR100 System

Table 5a

Mean Roof Height: h ≤ 15 ft
Roof Angle: 7 < θ ≤ 20 degrees
Exposure Category: C

Panel Orientation: Portrait
North/South Support γ_E = 1
Roof Type : Gable

Roof Wind Zone	Ground Snow Load (psf)	Wind Speed (mph)												
		90	95	100	105	110	115	120	130	140	150	160	170	180
Zones 1 & 2e	0	101	101	101	99	94	90	84	76	69	63	58	54	50
	10	80	80	80	80	80	80	80	76	69	63	58	54	50
	20	62	62	62	62	62	62	62	62	62	62	58	54	50
	30	62	62	62	62	62	62	62	62	62	62	58	54	50
	40	55	55	55	55	55	55	55	55	55	55	55	54	50
	50	50	50	50	50	50	50	50	50	50	50	50	50	50
	60	46	46	46	46	46	46	46	46	46	46	46	46	46
	70	43	43	43	43	43	43	43	43	43	43	43	43	43
	80	40	40	40	40	40	40	40	40	40	40	40	40	40
	90	38	38	38	38	38	38	38	38	38	38	38	38	38
Zones 2n, 2r, & 3e	0	100	95	91	85	79	74	69	62	55	50	46	42	40
	10	80	80	80	80	79	74	69	62	55	50	46	42	40
	20	62	62	62	62	62	62	62	62	55	50	46	42	40
	30	62	62	62	62	62	62	62	62	55	50	46	42	40
	40	55	55	55	55	55	55	55	55	55	50	46	42	40
	50	50	50	50	50	50	50	50	50	50	50	46	42	40
	60	46	46	46	46	46	46	46	46	46	46	46	42	40
	70	43	43	43	43	43	43	43	43	43	43	43	42	40
	80	40	40	40	40	40	40	40	40	40	40	40	40	40
	90	38	38	38	38	38	38	38	38	38	38	38	38	38
Zone 3r	0	92	87	80	74	69	65	61	54	49	44	41	39	36
	10	80	80	80	74	69	65	61	54	49	44	41	39	36
	20	62	62	62	62	62	62	61	54	49	44	41	39	36
	30	62	62	62	62	62	62	61	54	49	44	41	39	36
	40	55	55	55	55	55	55	55	54	49	44	41	39	36
	50	50	50	50	50	50	50	50	50	49	44	41	39	36
	60	46	46	46	46	46	46	46	46	46	44	41	39	36
	70	43	43	43	43	43	43	43	43	43	43	41	39	36
	80	40	40	40	40	40	40	40	40	40	40	40	39	36
	90	38	38	38	38	38	38	38	38	38	38	38	38	36

Notes:

1. Tables are based on critical rail span for load combinations as specified in chapter 2 of the ASCE 7-16 and allowable design loads per the 2015 Aluminum Design Manual.
2. Panels are assumed to be in portrait orientation with a maximum length of 67.5"

Structural ENGINUITY INC
Ingenuity in Engineering

SUNMODO®

Max Rail Spans for SunModo SMR100 System

Table 5b

Mean Roof Height: h ≤ 15 ft
Roof Angle: 7 < θ ≤ 20 degrees
Exposure Category: C

Panel Orientation: Portrait
North/South Support γ_E = 1.5
Roof Type : Gable

Roof Wind Zone	Ground Snow Load (psf)	Wind Speed (mph)												
		90	95	100	105	110	115	120	130	140	150	160	170	180
Zones 1 & 2e	0	94	89	82	77	72	68	65	59	53	49	46	42	40
	10	80	80	80	77	72	68	65	59	53	49	46	42	40
	20	62	62	62	62	62	62	62	59	53	49	46	42	40
	30	62	62	62	62	62	62	62	59	53	49	46	42	40
	40	55	55	55	55	55	55	55	55	53	49	46	42	40
	50	50	50	50	50	50	50	50	50	50	49	46	42	40
	60	46	46	46	46	46	46	46	46	46	46	46	42	40
	70	43	43	43	43	43	43	43	43	43	43	43	42	40
	80	40	40	40	40	40	40	40	40	40	40	40	40	40
	90	38	38	38	38	38	38	38	38	38	38	38	38	38
Zones 2n, 2r, & 3e	0	79	73	67	63	59	55	52	46	42	39	37	34	32
	10	79	73	67	63	59	55	52	46	42	39	37	34	32
	20	62	62	62	62	59	55	52	46	42	39	37	34	32
	30	62	62	62	62	59	55	52	46	42	39	37	34	32
	40	55	55	55	55	55	55	52	46	42	39	37	34	32
	50	50	50	50	50	50	50	50	46	42	39	37	34	32
	60	46	46	46	46	46	46	46	46	42	39	37	34	32
	70	43	43	43	43	43	43	43	43	42	39	37	34	32
	80	40	40	40	40	40	40	40	40	40	39	37	34	32
	90	38	38	38	38	38	38	38	38	38	38	37	34	32
Zone 3r	0	69	64	59	55	52	48	46	41	38	36	33	31	29
	10	69	64	59	55	52	48	46	41	38	36	33	31	29
	20	62	62	59	55	52	48	46	41	38	36	33	31	29
	30	62	62	59	55	52	48	46	41	38	36	33	31	29
	40	55	55	55	55	52	48	46	41	38	36	33	31	29
	50	50	50	50	50	50	48	46	41	38	36	33	31	29
	60	46	46	46	46	46	46	46	41	38	36	33	31	29
	70	43	43	43	43	43	43	43	41	38	36	33	31	29
	80	40	40	40	40	40	40	40	40	38	36	33	31	29
	90	38	38	38	38	38	38	38	38	38	36	33	31	29

Notes:

1. Tables are based on critical rail span for load combinations as specified in chapter 2 of the ASCE 7-16 and allowable design loads per the 2015 Aluminum Design Manual.
2. Panels are assumed to be in portrait orientation with a maximum length of 67.5"

Structural ENGINUITY INC
Ingenuity in Engineering

SUNMODO®

Max Rail Spans for SunModo SMR100 System

Table 6a

Mean Roof Height: h ≤ 15 ft
Roof Angle: 7 < θ ≤ 20 degrees
Exposure Category: D

Panel Orientation: Portrait
North/South Support γ_E = 1
Roof Type : Gable

Roof Wind Zone	Ground Snow Load (psf)	Wind Speed (mph)												
		90	95	100	105	110	115	120	130	140	150	160	170	180
Zones 1 & 2e	0	101	100	94	89	83	78	74	67	61	56	52	48	45
	10	80	80	80	80	80	78	74	67	61	56	52	48	45
	20	62	62	62	62	62	62	62	62	61	56	52	48	45
	30	62	62	62	62	62	62	62	62	61	56	52	48	45
	40	55	55	55	55	55	55	55	55	55	55	52	48	45
	50	50	50	50	50	50	50	50	50	50	50	50	48	45
	60	46	46	46	46	46	46	46	46	46	46	46	46	45
	70	43	43	43	43	43	43	43	43	43	43	43	43	43
	80	40	40	40	40	40	40	40	40	40	40	40	40	40
	90	38	38	38	38	38	38	38	38	38	38	38	38	38
Zones 2n, 2r, & 3e	0	91	86	79	73	68	64	60	54	48	44	41	38	36
	10	80	80	79	73	68	64	60	54	48	44	41	38	36
	20	62	62	62	62	62	62	60	54	48	44	41	38	36
	30	62	62	62	62	62	62	60	54	48	44	41	38	36
	40	55	55	55	55	55	55	55	54	48	44	41	38	36
	50	50	50	50	50	50	50	50	50	48	44	41	38	36
	60	46	46	46	46	46	46	46	46	46	44	41	38	36
	70	43	43	43	43	43	43	43	43	43	43	41	38	36
	80	40	40	40	40	40	40	40	40	40	40	40	38	36
	90	38	38	38	38	38	38	38	38	38	38	38	38	36
Zone 3r	0	81	75	69	64	60	56	53	47	43	40	37	35	33
	10	80	75	69	64	60	56	53	47	43	40	37	35	33
	20	62	62	62	62	60	56	53	47	43	40	37	35	33
	30	62	62	62	62	60	56	53	47	43	40	37	35	33
	40	55	55	55	55	55	55	53	47	43	40	37	35	33
	50	50	50	50	50	50	50	50	47	43	40	37	35	33
	60	46	46	46	46	46	46	46	46	43	40	37	35	33
	70	43	43	43	43	43	43	43	43	43	40	37	35	33
	80	40	40	40	40	40	40	40	40	40	40	37	35	33
	90	38	38	38	38	38	38	38	38	38	38	37	35	33

Notes:

1. Tables are based on critical rail span for load combinations as specified in chapter 2 of the ASCE 7-16 and allowable design loads per the 2015 Aluminum Design Manual.
2. Panels are assumed to be in portrait orientation with a maximum length of 67.5"

Structural ENGINUITY INC
Ingenuity in Engineering

SUNMODO®

Max Rail Spans for SunModo SMR100 System

Table 6b

Mean Roof Height: h ≤ 15 ft
Roof Angle: 7 < θ ≤ 20 degrees
Exposure Category: D

Panel Orientation: Portrait
North/South Support γ_E = 1.5
Roof Type : Gable

Roof Wind Zone	Ground Snow Load (psf)	Wind Speed (mph)												
		90	95	100	105	110	115	120	130	140	150	160	170	180
Zones 1 & 2e	0	83	77	72	68	64	61	57	52	48	44	41	38	36
	10	80	77	72	68	64	61	57	52	48	44	41	38	36
	20	62	62	62	62	62	61	57	52	48	44	41	38	36
	30	62	62	62	62	62	61	57	52	48	44	41	38	36
	40	55	55	55	55	55	55	55	52	48	44	41	38	36
	50	50	50	50	50	50	50	50	50	48	44	41	38	36
	60	46	46	46	46	46	46	46	46	46	44	41	38	36
	70	43	43	43	43	43	43	43	43	43	43	41	38	36
	80	40	40	40	40	40	40	40	40	40	40	40	38	36
	90	38	38	38	38	38	38	38	38	38	38	38	38	36
Zones 2n, 2r, & 3e	0	68	63	58	55	51	48	45	41	38	35	33	31	29
	10	68	63	58	55	51	48	45	41	38	35	33	31	29
	20	62	62	58	55	51	48	45	41	38	35	33	31	29
	30	62	62	58	55	51	48	45	41	38	35	33	31	29
	40	55	55	55	55	51	48	45	41	38	35	33	31	29
	50	50	50	50	50	50	48	45	41	38	35	33	31	29
	60	46	46	46	46	46	46	45	41	38	35	33	31	29
	70	43	43	43	43	43	43	43	41	38	35	33	31	29
	80	40	40	40	40	40	40	40	40	38	35	33	31	29
	90	38	38	38	38	38	38	38	38	38	35	33	31	29
Zone 3r	0	60	55	51	48	45	42	41	37	35	32	30	28	27
	10	60	55	51	48	45	42	41	37	35	32	30	28	27
	20	60	55	51	48	45	42	41	37	35	32	30	28	27
	30	60	55	51	48	45	42	41	37	35	32	30	28	27
	40	55	55	51	48	45	42	41	37	35	32	30	28	27
	50	50	50	50	48	45	42	41	37	35	32	30	28	27
	60	46	46	46	46	45	42	41	37	35	32	30	28	27
	70	43	43	43	43	43	42	41	37	35	32	30	28	27
	80	40	40	40	40	40	40	40	37	35	32	30	28	27
	90	38	38	38	38	38	38	38	37	35	32	30	28	27

Notes:

1. Tables are based on critical rail span for load combinations as specified in chapter 2 of the ASCE 7-16 and allowable design loads per the 2015 Aluminum Design Manual.
2. Panels are assumed to be in portrait orientation with a maximum length of 67.5"

Structural ENGINUITY INC
Ingenuity in Engineering

SUNMODO®

Max Rail Spans for SunModo SMR100 System

Table 7a

Mean Roof Height: h ≤ 15 ft
Roof Angle: 20 < θ ≤ 27 degrees
Exposure Category: B

Panel Orientation: Portrait
North/South Support γ_E = 1
Roof Type : Gable

Roof Wind Zone	Ground Snow Load (psf)	Wind Speed (mph)												
		90	95	100	105	110	115	120	130	140	150	160	170	180
Zones 1 & 2e	0	101	101	101	101	101	101	101	101	101	96	90	85	79
	10	86	86	86	86	86	86	86	86	86	86	86	85	79
	20	73	73	73	73	73	73	73	73	73	73	73	72	71
	30	62	62	62	62	62	62	62	62	62	62	62	62	62
	40	55	55	55	55	55	55	55	55	55	55	55	55	55
	50	50	50	50	50	50	50	50	50	50	50	50	50	50
	60	46	46	46	46	46	46	46	46	46	46	46	46	46
	70	43	43	43	43	43	43	43	43	43	43	43	43	43
	80	40	40	40	40	40	40	40	40	40	40	40	40	40
	90	38	38	38	38	38	38	38	38	38	38	38	38	38
Zones 2n, 2r, & 3e	0	101	101	101	101	101	101	99	92	86	78	70	64	59
	10	86	86	86	86	86	86	86	86	86	78	70	64	59
	20	73	73	73	73	73	73	73	73	73	73	70	64	59
	30	62	62	62	62	62	62	62	62	62	62	62	62	59
	40	55	55	55	55	55	55	55	55	55	55	55	55	55
	50	50	50	50	50	50	50	50	50	50	50	50	50	50
	60	46	46	46	46	46	46	46	46	46	46	46	46	46
	70	43	43	43	43	43	43	43	43	43	43	43	43	43
	80	40	40	40	40	40	40	40	40	40	40	40	40	40
	90	38	38	38	38	38	38	38	38	38	38	38	38	38
Zone 3r	0	101	101	101	101	101	98	94	87	78	70	63	58	53
	10	86	86	86	86	86	86	86	86	78	70	63	58	53
	20	73	73	73	73	73	73	73	73	73	70	63	58	53
	30	62	62	62	62	62	62	62	62	62	62	62	58	53
	40	55	55	55	55	55	55	55	55	55	55	55	55	53
	50	50	50	50	50	50	50	50	50	50	50	50	50	50
	60	46	46	46	46	46	46	46	46	46	46	46	46	46
	70	43	43	43	43	43	43	43	43	43	43	43	43	43
	80	40	40	40	40	40	40	40	40	40	40	40	40	40
	90	38	38	38	38	38	38	38	38	38	38	38	38	38

Notes:

1. Tables are based on critical rail span for load combinations as specified in chapter 2 of the ASCE 7-16 and allowable design loads per the 2015 Aluminum Design Manual.
2. Panels are assumed to be in portrait orientation with a maximum length of 67.5"

Structural ENGINUITY INC
Ingenuity in Engineering

SUNMODO®

Max Rail Spans for SunModo SMR100 System

Table 7b

Mean Roof Height: h ≤ 15 ft
Roof Angle: 20 < θ ≤ 27 degrees
Exposure Category: B

Panel Orientation: Portrait
North/South Support γ_E = 1.5
Roof Type : Gable

Roof Wind Zone	Ground Snow Load (psf)	Wind Speed (mph)												
		90	95	100	105	110	115	120	130	140	150	160	170	180
Zones 1 & 2e	0	101	101	101	101	101	101	97	90	84	77	70	65	61
	10	86	86	86	86	86	86	86	86	84	77	70	65	61
	20	73	73	73	73	73	73	73	73	73	73	70	65	61
	30	62	62	62	62	62	62	62	62	62	62	62	62	61
	40	55	55	55	55	55	55	55	55	55	55	55	55	55
	50	50	50	50	50	50	50	50	50	50	50	50	50	50
	60	46	46	46	46	46	46	46	46	46	46	46	46	46
	70	43	43	43	43	43	43	43	43	43	43	43	43	43
	80	40	40	40	40	40	40	40	40	40	40	40	40	40
	90	38	38	38	38	38	38	38	38	38	38	38	38	38
Zones 2n, 2r, & 3e	0	101	101	98	93	89	86	80	71	63	57	52	48	44
	10	86	86	86	86	86	86	80	71	63	57	52	48	44
	20	73	73	73	73	73	73	73	71	63	57	52	48	44
	30	62	62	62	62	62	62	62	62	62	57	52	48	44
	40	55	55	55	55	55	55	55	55	55	55	52	48	44
	50	50	50	50	50	50	50	50	50	50	50	50	48	44
	60	46	46	46	46	46	46	46	46	46	46	46	46	44
	70	43	43	43	43	43	43	43	43	43	43	43	43	43
	80	40	40	40	40	40	40	40	40	40	40	40	40	40
	90	38	38	38	38	38	38	38	38	38	38	38	38	38
Zone 3r	0	101	97	92	88	84	78	72	64	57	51	47	43	40
	10	86	86	86	86	84	78	72	64	57	51	47	43	40
	20	73	73	73	73	73	73	72	64	57	51	47	43	40
	30	62	62	62	62	62	62	62	62	57	51	47	43	40
	40	55	55	55	55	55	55	55	55	55	51	47	43	40
	50	50	50	50	50	50	50	50	50	50	50	47	43	40
	60	46	46	46	46	46	46	46	46	46	46	46	43	40
	70	43	43	43	43	43	43	43	43	43	43	43	43	40
	80	40	40	40	40	40	40	40	40	40	40	40	40	40
	90	38	38	38	38	38	38	38	38	38	38	38	38	38

Notes:

1. Tables are based on critical rail span for load combinations as specified in chapter 2 of the ASCE 7-16 and allowable design loads per the 2015 Aluminum Design Manual.
2. Panels are assumed to be in portrait orientation with a maximum length of 67.5"

Structural ENGINUITY INC
Ingenuity in Engineering

SUNMODO®

Max Rail Spans for SunModo SMR100 System

Table 8a

Mean Roof Height: h ≤ 15 ft
Roof Angle: 20 < θ ≤ 27 degrees
Exposure Category: C

Panel Orientation: Portrait
North/South Support γ_E = 1
Roof Type : Gable

Roof Wind Zone	Ground Snow Load (psf)	Wind Speed (mph)												
		90	95	100	105	110	115	120	130	140	150	160	170	180
Zones 1 & 2e	0	101	101	101	101	101	101	98	91	85	77	71	65	61
	10	86	86	86	86	86	86	86	86	85	77	71	65	61
	20	73	73	73	73	73	73	73	73	72	71	69	65	61
	30	62	62	62	62	62	62	62	62	62	62	62	61	60
	40	55	55	55	55	55	55	55	55	55	55	55	55	55
	50	50	50	50	50	50	50	50	50	50	50	50	50	50
	60	46	46	46	46	46	46	46	46	46	46	46	46	46
	70	43	43	43	43	43	43	43	43	43	43	43	43	43
	80	40	40	40	40	40	40	40	40	40	40	40	40	40
	90	38	38	38	38	38	38	38	38	38	38	38	38	38
Zones 2n, 2r, & 3e	0	101	101	98	93	89	86	81	71	64	58	53	48	45
	10	86	86	86	86	86	86	81	71	64	58	53	48	45
	20	73	73	73	73	73	73	73	71	64	58	53	48	45
	30	62	62	62	62	62	62	62	62	62	58	53	48	45
	40	55	55	55	55	55	55	55	55	55	55	53	48	45
	50	50	50	50	50	50	50	50	50	50	50	50	48	45
	60	46	46	46	46	46	46	46	46	46	46	46	46	45
	70	43	43	43	43	43	43	43	43	43	43	43	43	43
	80	40	40	40	40	40	40	40	40	40	40	40	40	40
	90	38	38	38	38	38	38	38	38	38	38	38	38	38
Zone 3r	0	101	97	92	88	84	78	73	64	57	52	47	43	40
	10	86	86	86	86	84	78	73	64	57	52	47	43	40
	20	73	73	73	73	73	73	73	64	57	52	47	43	40
	30	62	62	62	62	62	62	62	62	57	52	47	43	40
	40	55	55	55	55	55	55	55	55	55	52	47	43	40
	50	50	50	50	50	50	50	50	50	50	50	47	43	40
	60	46	46	46	46	46	46	46	46	46	46	46	43	40
	70	43	43	43	43	43	43	43	43	43	43	43	43	40
	80	40	40	40	40	40	40	40	40	40	40	40	40	40
	90	38	38	38	38	38	38	38	38	38	38	38	38	38

Notes:

1. Tables are based on critical rail span for load combinations as specified in chapter 2 of the ASCE 7-16 and allowable design loads per the 2015 Aluminum Design Manual.
2. Panels are assumed to be in portrait orientation with a maximum length of 67.5"

Structural ENGINUITY INC
Ingenuity in Engineering

SUNMODO®

Max Rail Spans for SunModo SMR100 System

Table 8b	Mean Roof Height: h ≤ 15 ft Roof Angle: 20 < θ ≤ 27 degrees Exposure Category: C	Panel Orientation: Portrait North/South Support γ_E = 1.5 Roof Type : Gable

Roof Wind Zone	Ground Snow Load (psf)	Wind Speed (mph)												
		90	95	100	105	110	115	120	130	140	150	160	170	180
Zones 1 & 2e	0	101	101	96	92	88	84	79	71	65	59	55	51	47
	10	86	86	86	86	86	84	79	71	65	59	55	51	47
	20	73	73	73	73	73	73	73	71	65	59	55	51	47
	30	62	62	62	62	62	62	62	62	62	59	55	51	47
	40	55	55	55	55	55	55	55	55	55	55	55	51	47
	50	50	50	50	50	50	50	50	50	50	50	50	50	47
	60	46	46	46	46	46	46	46	46	46	46	46	46	46
	70	43	43	43	43	43	43	43	43	43	43	43	43	43
	80	40	40	40	40	40	40	40	40	40	40	40	40	40
	90	38	38	38	38	38	38	38	38	38	38	38	38	38
Zones 2n, 2r, & 3e	0	89	85	78	72	67	63	59	53	48	43	40	38	36
	10	86	85	78	72	67	63	59	53	48	43	40	38	36
	20	73	73	73	72	67	63	59	53	48	43	40	38	36
	30	62	62	62	62	62	62	59	53	48	43	40	38	36
	40	55	55	55	55	55	55	55	53	48	43	40	38	36
	50	50	50	50	50	50	50	50	50	48	43	40	38	36
	60	46	46	46	46	46	46	46	46	46	43	40	38	36
	70	43	43	43	43	43	43	43	43	43	43	40	38	36
	80	40	40	40	40	40	40	40	40	40	40	40	38	36
	90	38	38	38	38	38	38	38	38	38	38	38	38	36
Zone 3r	0	84	76	70	65	61	57	53	47	43	39	36	34	32
	10	84	76	70	65	61	57	53	47	43	39	36	34	32
	20	73	73	70	65	61	57	53	47	43	39	36	34	32
	30	62	62	62	62	61	57	53	47	43	39	36	34	32
	40	55	55	55	55	55	55	53	47	43	39	36	34	32
	50	50	50	50	50	50	50	50	47	43	39	36	34	32
	60	46	46	46	46	46	46	46	46	43	39	36	34	32
	70	43	43	43	43	43	43	43	43	43	39	36	34	32
	80	40	40	40	40	40	40	40	40	40	39	36	34	32
	90	38	38	38	38	38	38	38	38	38	38	36	34	32

Notes:

1. Tables are based on critical rail span for load combinations as specified in chapter 2 of the ASCE 7-16 and allowable design loads per the 2015 Aluminum Design Manual.
2. Panels are assumed to be in portrait orientation with a maximum length of 67.5"

Structural ENGINUITY INC
Ingenuity in Engineering

SUNMODO®

Max Rail Spans for SunModo SMR100 System

Table 9a

Mean Roof Height: h ≤ 15 ft
Roof Angle: 20 < θ ≤ 27 degrees
Exposure Category: D

Panel Orientation: Portrait
North/South Support γ_E = 1
Roof Type : Gable

Roof Wind Zone	Ground Snow Load (psf)	Wind Speed (mph)												
		90	95	100	105	110	115	120	130	140	150	160	170	180
Zones 1 & 2e	0	101	101	101	101	97	93	89	82	74	68	62	58	54
	10	86	86	86	86	86	86	86	82	74	68	62	58	54
	20	73	73	73	73	73	73	73	72	70	68	62	58	54
	30	62	62	62	62	62	62	62	62	62	61	60	58	54
	40	55	55	55	55	55	55	55	55	55	55	55	54	53
	50	50	50	50	50	50	50	50	50	50	50	50	50	49
	60	46	46	46	46	46	46	46	46	46	46	46	46	46
	70	43	43	43	43	43	43	43	43	43	43	43	43	43
	80	40	40	40	40	40	40	40	40	40	40	40	40	40
	90	38	38	38	38	38	38	38	38	38	38	38	38	38
Zones 2n, 2r, & 3e	0	99	94	89	85	80	74	69	62	55	50	46	42	40
	10	86	86	86	85	80	74	69	62	55	50	46	42	40
	20	73	73	73	73	73	73	69	62	55	50	46	42	40
	30	62	62	62	62	62	62	62	62	55	50	46	42	40
	40	55	55	55	55	55	55	55	55	55	50	46	42	40
	50	50	50	50	50	50	50	50	50	50	50	46	42	40
	60	46	46	46	46	46	46	46	46	46	46	46	42	40
	70	43	43	43	43	43	43	43	43	43	43	43	42	40
	80	40	40	40	40	40	40	40	40	40	40	40	40	40
	90	38	38	38	38	38	38	38	38	38	38	38	38	38
Zone 3r	0	93	89	84	77	72	67	62	55	50	45	41	38	36
	10	86	86	84	77	72	67	62	55	50	45	41	38	36
	20	73	73	73	73	72	67	62	55	50	45	41	38	36
	30	62	62	62	62	62	62	62	55	50	45	41	38	36
	40	55	55	55	55	55	55	55	55	50	45	41	38	36
	50	50	50	50	50	50	50	50	50	50	45	41	38	36
	60	46	46	46	46	46	46	46	46	46	45	41	38	36
	70	43	43	43	43	43	43	43	43	43	43	41	38	36
	80	40	40	40	40	40	40	40	40	40	40	40	38	36
	90	38	38	38	38	38	38	38	38	38	38	38	38	36

Notes:

1. Tables are based on critical rail span for load combinations as specified in chapter 2 of the ASCE 7-16 and allowable design loads per the 2015 Aluminum Design Manual.
2. Panels are assumed to be in portrait orientation with a maximum length of 67.5"

Structural ENGINUITY INC
Ingenuity in Engineering

SUNMODO®

Max Rail Spans for SunModo SMR100 System

Table 9b

Mean Roof Height: h ≤ 15 ft
Roof Angle: 20 < θ ≤ 27 degrees
Exposure Category: D

Panel Orientation: Portrait
North/South Support γ_E = 1.5
Roof Type : Gable

Roof Wind Zone	Ground Snow Load (psf)	Wind Speed (mph)												
		90	95	100	105	110	115	120	130	140	150	160	170	180
Zones 1 & 2e	0	97	92	88	84	78	74	70	63	57	53	49	45	42
	10	86	86	86	84	78	74	70	63	57	53	49	45	42
	20	73	73	73	73	73	73	70	63	57	53	49	45	42
	30	62	62	62	62	62	62	62	62	57	53	49	45	42
	40	55	55	55	55	55	55	55	55	55	53	49	45	42
	50	50	50	50	50	50	50	50	50	50	50	49	45	42
	60	46	46	46	46	46	46	46	46	46	46	46	45	42
	70	43	43	43	43	43	43	43	43	43	43	43	43	42
	80	40	40	40	40	40	40	40	40	40	40	40	40	40
	90	38	38	38	38	38	38	38	38	38	38	38	38	38
Zones 2n, 2r, & 3e	0	79	73	67	63	59	55	52	46	42	39	36	34	32
	10	79	73	67	63	59	55	52	46	42	39	36	34	32
	20	73	73	67	63	59	55	52	46	42	39	36	34	32
	30	62	62	62	62	59	55	52	46	42	39	36	34	32
	40	55	55	55	55	55	55	52	46	42	39	36	34	32
	50	50	50	50	50	50	50	50	46	42	39	36	34	32
	60	46	46	46	46	46	46	46	46	42	39	36	34	32
	70	43	43	43	43	43	43	43	43	42	39	36	34	32
	80	40	40	40	40	40	40	40	40	40	39	36	34	32
	90	38	38	38	38	38	38	38	38	38	38	36	34	32
Zone 3r	0	71	65	60	56	52	49	46	42	38	35	32	30	28
	10	71	65	60	56	52	49	46	42	38	35	32	30	28
	20	71	65	60	56	52	49	46	42	38	35	32	30	28
	30	62	62	60	56	52	49	46	42	38	35	32	30	28
	40	55	55	55	55	52	49	46	42	38	35	32	30	28
	50	50	50	50	50	50	49	46	42	38	35	32	30	28
	60	46	46	46	46	46	46	46	42	38	35	32	30	28
	70	43	43	43	43	43	43	43	42	38	35	32	30	28
	80	40	40	40	40	40	40	40	40	38	35	32	30	28
	90	38	38	38	38	38	38	38	38	38	35	32	30	28

Notes:

1. Tables are based on critical rail span for load combinations as specified in chapter 2 of the ASCE 7-16 and allowable design loads per the 2015 Aluminum Design Manual.
2. Panels are assumed to be in portrait orientation with a maximum length of 67.5"

Structural ENGINUITY INC
Ingenuity in Engineering

SUNMODO®

Max Rail Spans for SunModo SMR100 System

Table 10a

Mean Roof Height: h ≤ 15 ft
Roof Angle: 27 < θ ≤ 45 degrees
Exposure Category: B

Panel Orientation: Portrait
North/South Support γ_E = 1
Roof Type : Gable

Roof Wind Zone	Ground Snow Load (psf)	Wind Speed (mph)												
		90	95	100	105	110	115	120	130	140	150	160	170	180
Zones 1, 2e, & 2r	0	101	101	101	101	101	101	101	101	97	93	89	85	78
	10	86	86	86	86	86	86	86	86	84	82	80	78	76
	20	75	75	75	75	75	75	74	73	72	71	69	68	66
	30	64	64	64	64	64	64	64	64	64	63	62	61	60
	40	57	57	57	57	57	57	57	57	57	57	57	56	55
	50	52	52	52	52	52	52	52	52	52	52	52	52	51
	60	48	48	48	48	48	48	48	48	48	48	48	48	48
	70	45	45	45	45	45	45	45	45	45	45	45	45	45
	80	42	42	42	42	42	42	42	42	42	42	42	42	42
	90	40	40	40	40	40	40	40	40	40	40	40	40	40
Zones 2n & 3r	0	101	101	101	101	101	101	101	100	93	88	83	76	69
	10	86	86	86	86	86	86	86	86	84	82	80	76	69
	20	75	75	75	75	75	75	74	73	72	71	69	68	66
	30	64	64	64	64	64	64	64	64	64	63	62	61	60
	40	57	57	57	57	57	57	57	57	57	57	57	56	55
	50	52	52	52	52	52	52	52	52	52	52	52	52	51
	60	48	48	48	48	48	48	48	48	48	48	48	48	48
	70	45	45	45	45	45	45	45	45	45	45	45	45	45
	80	42	42	42	42	42	42	42	42	42	42	42	42	42
	90	40	40	40	40	40	40	40	40	40	40	40	40	40
Zone 3e	0	101	101	101	101	101	101	97	91	85	78	70	64	59
	10	86	86	86	86	86	86	86	86	84	78	70	64	59
	20	75	75	75	75	75	75	74	73	72	71	69	64	59
	30	64	64	64	64	64	64	64	64	64	63	62	61	59
	40	57	57	57	57	57	57	57	57	57	57	57	56	55
	50	52	52	52	52	52	52	52	52	52	52	52	52	51
	60	48	48	48	48	48	48	48	48	48	48	48	48	48
	70	45	45	45	45	45	45	45	45	45	45	45	45	45
	80	42	42	42	42	42	42	42	42	42	42	42	42	42
	90	40	40	40	40	40	40	40	40	40	40	40	40	40

Notes:

1. Tables are based on critical rail span for load combinations as specified in chapter 2 of the ASCE 7-16 and allowable design loads per the 2015 Aluminum Design Manual.
2. Panels are assumed to be in portrait orientation with a maximum length of 67.5"

Structural ENGINUITY INC
Ingenuity in Engineering

SUNMODO®

Max Rail Spans for SunModo SMR100 System

Table 10b

Mean Roof Height: h ≤ 15 ft
Roof Angle: 27 < θ ≤ 45 degrees
Exposure Category: B

Panel Orientation: Portrait
North/South Support γ_E = 1.5
Roof Type : Gable

Roof Wind Zone	Ground Snow Load (psf)	Wind Speed (mph)												
		90	95	100	105	110	115	120	130	140	150	160	170	180
Zones 1, 2e, & 2r	0	101	101	101	101	101	101	97	90	84	76	68	62	57
	10	86	86	86	86	86	86	86	86	84	76	68	62	57
	20	75	75	75	75	75	75	74	73	72	71	68	62	57
	30	64	64	64	64	64	64	64	64	64	63	62	61	57
	40	57	57	57	57	57	57	57	57	57	57	57	56	55
	50	52	52	52	52	52	52	52	52	52	52	52	52	51
	60	48	48	48	48	48	48	48	48	48	48	48	48	48
	70	45	45	45	45	45	45	45	45	45	45	45	45	45
	80	42	42	42	42	42	42	42	42	42	42	42	42	42
	90	40	40	40	40	40	40	40	40	40	40	40	40	40
Zones 2n & 3r	0	101	101	101	101	97	93	89	83	75	67	61	56	52
	10	86	86	86	86	86	86	86	83	75	67	61	56	52
	20	75	75	75	75	75	75	74	73	72	67	61	56	52
	30	64	64	64	64	64	64	64	64	64	63	61	56	52
	40	57	57	57	57	57	57	57	57	57	57	57	56	52
	50	52	52	52	52	52	52	52	52	52	52	52	52	51
	60	48	48	48	48	48	48	48	48	48	48	48	48	48
	70	45	45	45	45	45	45	45	45	45	45	45	45	45
	80	42	42	42	42	42	42	42	42	42	42	42	42	42
	90	40	40	40	40	40	40	40	40	40	40	40	40	40
Zone 3e	0	101	100	96	92	88	84	81	71	64	57	52	48	45
	10	86	86	86	86	86	84	81	71	64	57	52	48	45
	20	75	75	75	75	75	75	74	71	64	57	52	48	45
	30	64	64	64	64	64	64	64	64	64	57	52	48	45
	40	57	57	57	57	57	57	57	57	57	57	52	48	45
	50	52	52	52	52	52	52	52	52	52	52	52	48	45
	60	48	48	48	48	48	48	48	48	48	48	48	48	45
	70	45	45	45	45	45	45	45	45	45	45	45	45	45
	80	42	42	42	42	42	42	42	42	42	42	42	42	42
	90	40	40	40	40	40	40	40	40	40	40	40	40	40

Notes:

1. Tables are based on critical rail span for load combinations as specified in chapter 2 of the ASCE 7-16 and allowable design loads per the 2015 Aluminum Design Manual.
2. Panels are assumed to be in portrait orientation with a maximum length of 67.5"

Structural ENGINUITY INC
Ingenuity in Engineering

SUNMODO®

Max Rail Spans for SunModo SMR100 System

Table 11a

Mean Roof Height: h ≤ 15 ft
Roof Angle: 27 < θ ≤ 45 degrees
Exposure Category: C

Panel Orientation: Portrait
North/South Support γ_E = 1
Roof Type : Gable

Roof Wind Zone	Ground Snow Load (psf)	Wind Speed (mph)												
		90	95	100	105	110	115	120	130	140	150	160	170	180
Zones 1, 2e, & 2r	0	101	101	101	101	100	97	95	90	84	76	68	62	57
	10	86	86	86	86	85	84	82	80	78	75	68	62	57
	20	75	75	74	73	73	72	71	69	68	66	64	62	57
	30	64	64	64	64	64	64	63	62	61	60	58	57	55
	40	57	57	57	57	57	57	57	57	56	55	54	53	51
	50	52	52	52	52	52	52	52	52	52	51	50	49	48
	60	48	48	48	48	48	48	48	48	48	48	47	46	46
	70	45	45	45	45	45	45	45	45	45	45	45	44	43
	80	42	42	42	42	42	42	42	42	42	42	42	42	41
	90	40	40	40	40	40	40	40	40	40	40	40	40	40
Zones 2n & 3r	0	101	101	101	101	97	93	90	84	75	68	62	56	52
	10	86	86	86	86	85	84	82	80	75	68	62	56	52
	20	75	75	74	73	73	72	71	69	68	66	62	56	52
	30	64	64	64	64	64	64	63	62	61	60	58	56	52
	40	57	57	57	57	57	57	57	57	56	55	54	53	51
	50	52	52	52	52	52	52	52	52	52	51	50	49	48
	60	48	48	48	48	48	48	48	48	48	48	47	46	46
	70	45	45	45	45	45	45	45	45	45	45	45	44	43
	80	42	42	42	42	42	42	42	42	42	42	42	42	41
	90	40	40	40	40	40	40	40	40	40	40	40	40	40
Zone 3e	0	101	101	96	92	88	85	81	71	64	58	53	48	45
	10	86	86	86	86	85	84	81	71	64	58	53	48	45
	20	75	75	74	73	73	72	71	69	64	58	53	48	45
	30	64	64	64	64	64	64	63	62	61	58	53	48	45
	40	57	57	57	57	57	57	57	57	56	55	53	48	45
	50	52	52	52	52	52	52	52	52	52	51	50	48	45
	60	48	48	48	48	48	48	48	48	48	48	47	46	45
	70	45	45	45	45	45	45	45	45	45	45	45	44	43
	80	42	42	42	42	42	42	42	42	42	42	42	42	41
	90	40	40	40	40	40	40	40	40	40	40	40	40	40

Notes:

1. Tables are based on critical rail span for load combinations as specified in chapter 2 of the ASCE 7-16 and allowable design loads per the 2015 Aluminum Design Manual.
2. Panels are assumed to be in portrait orientation with a maximum length of 67.5"

Structural ENGINUITY INC
Ingenuity in Engineering

SUNMODO®

Max Rail Spans for SunModo SMR100 System

Table 11b

Mean Roof Height: h ≤ 15 ft
Roof Angle: 27 < θ ≤ 45 degrees
Exposure Category: C

Panel Orientation: Portrait
North/South Support γ_E = 1.5
Roof Type : Gable

Roof Wind Zone	Ground Snow Load (psf)	Wind Speed (mph)												
		90	95	100	105	110	115	120	130	140	150	160	170	180
Zones 1, 2e, & 2r	0	101	100	95	91	87	84	79	69	61	55	50	46	43
	10	86	86	86	86	85	84	79	69	61	55	50	46	43
	20	75	75	74	73	73	72	71	69	61	55	50	46	43
	30	64	64	64	64	64	64	63	62	61	55	50	46	43
	40	57	57	57	57	57	57	57	57	56	55	50	46	43
	50	52	52	52	52	52	52	52	52	52	51	50	46	43
	60	48	48	48	48	48	48	48	48	48	48	47	46	43
	70	45	45	45	45	45	45	45	45	45	45	45	44	43
	80	42	42	42	42	42	42	42	42	42	42	42	42	41
	90	40	40	40	40	40	40	40	40	40	40	40	40	40
Zones 2n & 3r	0	97	92	88	84	80	74	70	62	56	51	46	43	40
	10	86	86	86	84	80	74	70	62	56	51	46	43	40
	20	75	75	74	73	73	72	70	62	56	51	46	43	40
	30	64	64	64	64	64	64	63	62	56	51	46	43	40
	40	57	57	57	57	57	57	57	57	56	51	46	43	40
	50	52	52	52	52	52	52	52	52	52	51	46	43	40
	60	48	48	48	48	48	48	48	48	48	48	46	43	40
	70	45	45	45	45	45	45	45	45	45	45	45	43	40
	80	42	42	42	42	42	42	42	42	42	42	42	42	40
	90	40	40	40	40	40	40	40	40	40	40	40	40	40
Zone 3e	0	88	84	78	73	68	63	59	53	48	44	40	38	35
	10	86	84	78	73	68	63	59	53	48	44	40	38	35
	20	75	75	74	73	68	63	59	53	48	44	40	38	35
	30	64	64	64	64	64	63	59	53	48	44	40	38	35
	40	57	57	57	57	57	57	57	53	48	44	40	38	35
	50	52	52	52	52	52	52	52	52	48	44	40	38	35
	60	48	48	48	48	48	48	48	48	48	44	40	38	35
	70	45	45	45	45	45	45	45	45	45	44	40	38	35
	80	42	42	42	42	42	42	42	42	42	42	40	38	35
	90	40	40	40	40	40	40	40	40	40	40	40	38	35

Notes:

1. Tables are based on critical rail span for load combinations as specified in chapter 2 of the ASCE 7-16 and allowable design loads per the 2015 Aluminum Design Manual.
2. Panels are assumed to be in portrait orientation with a maximum length of 67.5"

Structural ENGINUITY INC
Ingenuity in Engineering

SUNMODO®

Max Rail Spans for SunModo SMR100 System

Table 12a

Mean Roof Height: h ≤ 15 ft
Roof Angle: 27 < θ ≤ 45 degrees
Exposure Category: D

Panel Orientation: Portrait
North/South Support γ_E = 1
Roof Type : Gable

Roof Wind Zone	Ground Snow Load (psf)	Wind Speed (mph)												
		90	95	100	105	110	115	120	130	140	150	160	170	180
Zones 1, 2e, & 2r	0	101	101	100	97	94	92	89	82	73	65	59	54	49
	10	86	86	85	84	82	81	79	77	73	65	59	54	49
	20	74	73	73	72	71	70	69	67	65	63	59	54	49
	30	64	64	64	64	63	63	62	60	59	57	56	54	49
	40	57	57	57	57	57	57	57	55	54	53	52	51	49
	50	52	52	52	52	52	52	52	52	51	50	49	48	47
	60	48	48	48	48	48	48	48	48	48	47	46	45	44
	70	45	45	45	45	45	45	45	45	45	44	44	43	42
	80	42	42	42	42	42	42	42	42	42	42	42	41	40
	90	40	40	40	40	40	40	40	40	40	40	40	39	39
Zones 2n & 3r	0	101	101	97	93	89	85	82	73	65	59	54	49	46
	10	86	86	85	84	82	81	79	73	65	59	54	49	46
	20	74	73	73	72	71	70	69	67	65	59	54	49	46
	30	64	64	64	64	63	63	62	60	59	57	54	49	46
	40	57	57	57	57	57	57	57	55	54	53	52	49	46
	50	52	52	52	52	52	52	52	52	51	50	49	48	46
	60	48	48	48	48	48	48	48	48	48	47	46	45	44
	70	45	45	45	45	45	45	45	45	45	44	44	43	42
	80	42	42	42	42	42	42	42	42	42	42	42	41	40
	90	40	40	40	40	40	40	40	40	40	40	40	39	39
Zone 3e	0	97	92	88	84	80	74	70	62	56	50	46	43	40
	10	86	86	85	84	80	74	70	62	56	50	46	43	40
	20	74	73	73	72	71	70	69	62	56	50	46	43	40
	30	64	64	64	64	63	63	62	60	56	50	46	43	40
	40	57	57	57	57	57	57	57	55	54	50	46	43	40
	50	52	52	52	52	52	52	52	52	51	50	46	43	40
	60	48	48	48	48	48	48	48	48	48	47	46	43	40
	70	45	45	45	45	45	45	45	45	45	44	44	43	40
	80	42	42	42	42	42	42	42	42	42	42	42	41	40
	90	40	40	40	40	40	40	40	40	40	40	40	39	39

Notes:

1. Tables are based on critical rail span for load combinations as specified in chapter 2 of the ASCE 7-16 and allowable design loads per the 2015 Aluminum Design Manual.
2. Panels are assumed to be in portrait orientation with a maximum length of 67.5"

Structural ENGINUITY INC
Ingenuity in Engineering

SUNMODO®

Max Rail Spans for SunModo SMR100 System

Table 12b

Mean Roof Height: h ≤ 15 ft
Roof Angle: 27 < θ ≤ 45 degrees
Exposure Category: D

Panel Orientation: Portrait
North/South Support γ_E = 1.5
Roof Type : Gable

Roof Wind Zone	Ground Snow Load (psf)	Wind Speed (mph)												
		90	95	100	105	110	115	120	130	140	150	160	170	180
Zones 1, 2e, & 2r	0	96	91	87	83	78	72	67	59	53	48	44	41	38
	10	86	86	85	83	78	72	67	59	53	48	44	41	38
	20	74	73	73	72	71	70	67	59	53	48	44	41	38
	30	64	64	64	64	63	63	62	59	53	48	44	41	38
	40	57	57	57	57	57	57	57	55	53	48	44	41	38
	50	52	52	52	52	52	52	52	52	51	48	44	41	38
	60	48	48	48	48	48	48	48	48	48	47	44	41	38
	70	45	45	45	45	45	45	45	45	45	44	44	41	38
	80	42	42	42	42	42	42	42	42	42	42	42	41	38
	90	40	40	40	40	40	40	40	40	40	40	40	39	38
Zones 2n & 3r	0	89	85	80	74	69	64	61	54	49	44	41	39	36
	10	86	85	80	74	69	64	61	54	49	44	41	39	36
	20	74	73	73	72	69	64	61	54	49	44	41	39	36
	30	64	64	64	64	63	63	61	54	49	44	41	39	36
	40	57	57	57	57	57	57	57	54	49	44	41	39	36
	50	52	52	52	52	52	52	52	52	49	44	41	39	36
	60	48	48	48	48	48	48	48	48	48	44	41	39	36
	70	45	45	45	45	45	45	45	45	45	44	41	39	36
	80	42	42	42	42	42	42	42	42	42	42	41	39	36
	90	40	40	40	40	40	40	40	40	40	40	40	39	36
Zone 3e	0	79	73	67	63	59	55	52	46	42	39	36	34	31
	10	79	73	67	63	59	55	52	46	42	39	36	34	31
	20	74	73	67	63	59	55	52	46	42	39	36	34	31
	30	64	64	64	63	59	55	52	46	42	39	36	34	31
	40	57	57	57	57	57	55	52	46	42	39	36	34	31
	50	52	52	52	52	52	52	52	46	42	39	36	34	31
	60	48	48	48	48	48	48	48	46	42	39	36	34	31
	70	45	45	45	45	45	45	45	45	42	39	36	34	31
	80	42	42	42	42	42	42	42	42	42	39	36	34	31
	90	40	40	40	40	40	40	40	40	40	39	36	34	31

Notes:

1. Tables are based on critical rail span for load combinations as specified in chapter 2 of the ASCE 7-16 and allowable design loads per the 2015 Aluminum Design Manual.
2. Panels are assumed to be in portrait orientation with a maximum length of 67.5"

Structural ENGINUITY INC
Ingenuity in Engineering

SUNMODO®

Max Rail Spans for SunModo SMR100 System

Table 13a

Mean Roof Height: h ≤ 15 ft
Roof Angle: 7 < θ ≤ 20 degrees
Exposure Category: B

Panel Orientation: Portrait
North/South Support γ_E = 1
Roof Type : Hip h/B = ≥ 0.8

Roof Wind Zone	Ground Snow Load (psf)	Wind Speed (mph)												
		90	95	100	105	110	115	120	130	140	150	160	170	180
Zone 1	0	101	101	101	101	101	101	101	101	94	88	80	74	69
	10	80	80	80	80	80	80	80	80	80	79	77	74	69
	20	62	62	62	62	62	62	62	62	62	62	62	62	61
	30	62	62	62	62	62	62	62	62	62	62	62	62	61
	40	55	55	55	55	55	55	55	55	55	55	55	55	55
	50	50	50	50	50	50	50	50	50	50	50	50	50	50
	60	46	46	46	46	46	46	46	46	46	46	46	46	46
	70	43	43	43	43	43	43	43	43	43	43	43	43	43
	80	40	40	40	40	40	40	40	40	40	40	40	40	40
	90	38	38	38	38	38	38	38	38	38	38	38	38	38
Zone 2r	0	101	101	101	101	101	101	100	93	86	77	70	64	60
	10	80	80	80	80	80	80	80	80	80	77	70	64	60
	20	62	62	62	62	62	62	62	62	62	62	62	62	60
	30	62	62	62	62	62	62	62	62	62	62	62	62	60
	40	55	55	55	55	55	55	55	55	55	55	55	55	55
	50	50	50	50	50	50	50	50	50	50	50	50	50	50
	60	46	46	46	46	46	46	46	46	46	46	46	46	46
	70	43	43	43	43	43	43	43	43	43	43	43	43	43
	80	40	40	40	40	40	40	40	40	40	40	40	40	40
	90	38	38	38	38	38	38	38	38	38	38	38	38	38
Zones 2e & 3	0	101	101	101	101	101	100	96	89	81	73	66	61	56
	10	80	80	80	80	80	80	80	80	80	73	66	61	56
	20	62	62	62	62	62	62	62	62	62	62	62	61	56
	30	62	62	62	62	62	62	62	62	62	62	62	61	56
	40	55	55	55	55	55	55	55	55	55	55	55	55	55
	50	50	50	50	50	50	50	50	50	50	50	50	50	50
	60	46	46	46	46	46	46	46	46	46	46	46	46	46
	70	43	43	43	43	43	43	43	43	43	43	43	43	43
	80	40	40	40	40	40	40	40	40	40	40	40	40	40
	90	38	38	38	38	38	38	38	38	38	38	38	38	38

Notes:

1. Tables are based on critical rail span for load combinations as specified in chapter 2 of the ASCE 7-16 and allowable design loads per the 2015 Aluminum Design Manual.
2. Panels are assumed to be in portrait orientation with a maximum length of 67.5"

Structural ENGINUITY INC
Ingenuity in Engineering

SUNMODO®

Max Rail Spans for SunModo SMR100 System

Table 13b

Mean Roof Height: h ≤ 15 ft
Roof Angle: 7 < θ ≤ 20 degrees
Exposure Category: B

Panel Orientation: Portrait
North/South Support γ_E = 1.5
Roof Type : Hip h/B = ≥ 0.8

Roof Wind Zone	Ground Snow Load (psf)	Wind Speed (mph)												
		90	95	100	105	110	115	120	130	140	150	160	170	180
Zone 1	0	101	101	101	101	98	94	90	81	73	67	62	57	54
	10	80	80	80	80	80	80	80	80	73	67	62	57	54
	20	62	62	62	62	62	62	62	62	62	62	62	57	54
	30	62	62	62	62	62	62	62	62	62	62	62	57	54
	40	55	55	55	55	55	55	55	55	55	55	55	55	54
	50	50	50	50	50	50	50	50	50	50	50	50	50	50
	60	46	46	46	46	46	46	46	46	46	46	46	46	46
	70	43	43	43	43	43	43	43	43	43	43	43	43	43
	80	40	40	40	40	40	40	40	40	40	40	40	40	40
	90	38	38	38	38	38	38	38	38	38	38	38	38	38
Zone 2r	0	101	101	98	94	90	85	80	71	64	58	53	49	45
	10	80	80	80	80	80	80	80	71	64	58	53	49	45
	20	62	62	62	62	62	62	62	62	62	58	53	49	45
	30	62	62	62	62	62	62	62	62	62	58	53	49	45
	40	55	55	55	55	55	55	55	55	55	55	53	49	45
	50	50	50	50	50	50	50	50	50	50	50	50	49	45
	60	46	46	46	46	46	46	46	46	46	46	46	46	45
	70	43	43	43	43	43	43	43	43	43	43	43	43	43
	80	40	40	40	40	40	40	40	40	40	40	40	40	40
	90	38	38	38	38	38	38	38	38	38	38	38	38	38
Zones 2e & 3	0	101	99	94	90	85	80	75	67	60	55	50	46	43
	10	80	80	80	80	80	80	75	67	60	55	50	46	43
	20	62	62	62	62	62	62	62	62	60	55	50	46	43
	30	62	62	62	62	62	62	62	62	60	55	50	46	43
	40	55	55	55	55	55	55	55	55	55	55	50	46	43
	50	50	50	50	50	50	50	50	50	50	50	50	46	43
	60	46	46	46	46	46	46	46	46	46	46	46	46	43
	70	43	43	43	43	43	43	43	43	43	43	43	43	43
	80	40	40	40	40	40	40	40	40	40	40	40	40	40
	90	38	38	38	38	38	38	38	38	38	38	38	38	38

Notes:

1. Tables are based on critical rail span for load combinations as specified in chapter 2 of the ASCE 7-16 and allowable design loads per the 2015 Aluminum Design Manual.
2. Panels are assumed to be in portrait orientation with a maximum length of 67.5"

Structural ENGINUITY INC
Ingenuity in Engineering

SUNMODO®

Max Rail Spans for SunModo SMR100 System

Table 14a

Mean Roof Height: h ≤ 15 ft
Roof Angle: 7 < θ ≤ 20 degrees
Exposure Category: C

Panel Orientation: Portrait
North/South Support γ_E = 1
Roof Type : Hip h/B = ≥ 0.8

Roof Wind Zone	Ground Snow Load (psf)	Wind Speed (mph)												
		90	95	100	105	110	115	120	130	140	150	160	170	180
Zone 1	0	101	101	101	101	98	94	90	81	74	67	62	58	54
	10	80	80	80	80	80	80	79	78	74	67	62	58	54
	20	62	62	62	62	62	62	62	62	62	61	60	58	54
	30	62	62	62	62	62	62	62	62	62	61	60	58	54
	40	55	55	55	55	55	55	55	55	55	55	54	54	53
	50	50	50	50	50	50	50	50	50	50	50	50	50	49
	60	46	46	46	46	46	46	46	46	46	46	46	46	46
	70	43	43	43	43	43	43	43	43	43	43	43	43	43
	80	40	40	40	40	40	40	40	40	40	40	40	40	40
	90	38	38	38	38	38	38	38	38	38	38	38	38	38
Zone 2r	0	101	101	98	94	90	85	80	71	64	58	53	49	46
	10	80	80	80	80	80	80	79	71	64	58	53	49	46
	20	62	62	62	62	62	62	62	62	62	58	53	49	46
	30	62	62	62	62	62	62	62	62	62	58	53	49	46
	40	55	55	55	55	55	55	55	55	55	55	53	49	46
	50	50	50	50	50	50	50	50	50	50	50	50	49	46
	60	46	46	46	46	46	46	46	46	46	46	46	46	46
	70	43	43	43	43	43	43	43	43	43	43	43	43	43
	80	40	40	40	40	40	40	40	40	40	40	40	40	40
	90	38	38	38	38	38	38	38	38	38	38	38	38	38
Zones 2e & 3	0	101	99	95	91	86	80	75	67	60	55	50	47	43
	10	80	80	80	80	80	80	75	67	60	55	50	47	43
	20	62	62	62	62	62	62	62	62	60	55	50	47	43
	30	62	62	62	62	62	62	62	62	60	55	50	47	43
	40	55	55	55	55	55	55	55	55	55	55	50	47	43
	50	50	50	50	50	50	50	50	50	50	50	50	47	43
	60	46	46	46	46	46	46	46	46	46	46	46	46	43
	70	43	43	43	43	43	43	43	43	43	43	43	43	43
	80	40	40	40	40	40	40	40	40	40	40	40	40	40
	90	38	38	38	38	38	38	38	38	38	38	38	38	38

Notes:

1. Tables are based on critical rail span for load combinations as specified in chapter 2 of the ASCE 7-16 and allowable design loads per the 2015 Aluminum Design Manual.
2. Panels are assumed to be in portrait orientation with a maximum length of 67.5"

Structural ENGINUITY INC
Ingenuity in Engineering

SUNMODO®

Max Rail Spans for SunModo SMR100 System

Table 14b

Mean Roof Height: h ≤ 15 ft
Roof Angle: 7 < θ ≤ 20 degrees
Exposure Category: C

Panel Orientation: Portrait
North/South Support γ_E = 1.5
Roof Type : Hip h/B = ≥ 0.8

Roof Wind Zone	Ground Snow Load (psf)	Wind Speed (mph)												
		90	95	100	105	110	115	120	130	140	150	160	170	180
Zone 1	0	98	93	89	82	77	73	69	63	57	52	49	45	42
	10	80	80	80	80	77	73	69	63	57	52	49	45	42
	20	62	62	62	62	62	62	62	62	57	52	49	45	42
	30	62	62	62	62	62	62	62	62	57	52	49	45	42
	40	55	55	55	55	55	55	55	55	55	52	49	45	42
	50	50	50	50	50	50	50	50	50	50	50	49	45	42
	60	46	46	46	46	46	46	46	46	46	46	46	45	42
	70	43	43	43	43	43	43	43	43	43	43	43	43	42
	80	40	40	40	40	40	40	40	40	40	40	40	40	40
	90	38	38	38	38	38	38	38	38	38	38	38	38	38
Zone 2r	0	90	84	77	72	67	63	60	54	49	44	41	39	36
	10	80	80	77	72	67	63	60	54	49	44	41	39	36
	20	62	62	62	62	62	62	60	54	49	44	41	39	36
	30	62	62	62	62	62	62	60	54	49	44	41	39	36
	40	55	55	55	55	55	55	55	54	49	44	41	39	36
	50	50	50	50	50	50	50	50	50	49	44	41	39	36
	60	46	46	46	46	46	46	46	46	46	44	41	39	36
	70	43	43	43	43	43	43	43	43	43	43	41	39	36
	80	40	40	40	40	40	40	40	40	40	40	40	39	36
	90	38	38	38	38	38	38	38	38	38	38	38	38	36
Zones 2e & 3	0	86	79	73	68	64	60	57	51	46	42	39	37	35
	10	80	79	73	68	64	60	57	51	46	42	39	37	35
	20	62	62	62	62	62	60	57	51	46	42	39	37	35
	30	62	62	62	62	62	60	57	51	46	42	39	37	35
	40	55	55	55	55	55	55	55	51	46	42	39	37	35
	50	50	50	50	50	50	50	50	50	46	42	39	37	35
	60	46	46	46	46	46	46	46	46	46	42	39	37	35
	70	43	43	43	43	43	43	43	43	43	42	39	37	35
	80	40	40	40	40	40	40	40	40	40	40	39	37	35
	90	38	38	38	38	38	38	38	38	38	38	38	37	35

Notes:

1. Tables are based on critical rail span for load combinations as specified in chapter 2 of the ASCE 7-16 and allowable design loads per the 2015 Aluminum Design Manual.
2. Panels are assumed to be in portrait orientation with a maximum length of 67.5"

Structural ENGINUITY INC
Ingenuity in Engineering

SUNMODO®

Max Rail Spans for SunModo SMR100 System

Table 15a

Mean Roof Height: h ≤ 15 ft
Roof Angle: 7 < θ ≤ 20 degrees
Exposure Category: D

Panel Orientation: Portrait
North/South Support γ_E = 1
Roof Type : Hip h/B = ≥ 0.8

Roof Wind Zone	Ground Snow Load (psf)	Wind Speed (mph)												
		90	95	100	105	110	115	120	130	140	150	160	170	180
Zone 1	0	101	101	98	94	90	84	80	72	65	60	55	51	48
	10	80	80	80	80	79	78	77	72	65	60	55	51	48
	20	62	62	62	62	62	62	62	62	60	59	55	51	48
	30	62	62	62	62	62	62	62	62	60	59	55	51	48
	40	55	55	55	55	55	55	55	55	55	54	53	51	48
	50	50	50	50	50	50	50	50	50	50	50	49	48	48
	60	46	46	46	46	46	46	46	46	46	46	46	45	45
	70	43	43	43	43	43	43	43	43	43	43	43	43	42
	80	40	40	40	40	40	40	40	40	40	40	40	40	40
	90	38	38	38	38	38	38	38	38	38	38	38	38	38
Zone 2r	0	99	94	90	85	79	74	69	62	56	51	47	43	41
	10	80	80	80	80	79	74	69	62	56	51	47	43	41
	20	62	62	62	62	62	62	62	62	56	51	47	43	41
	30	62	62	62	62	62	62	62	62	56	51	47	43	41
	40	55	55	55	55	55	55	55	55	55	51	47	43	41
	50	50	50	50	50	50	50	50	50	50	50	47	43	41
	60	46	46	46	46	46	46	46	46	46	46	46	43	41
	70	43	43	43	43	43	43	43	43	43	43	43	43	41
	80	40	40	40	40	40	40	40	40	40	40	40	40	40
	90	38	38	38	38	38	38	38	38	38	38	38	38	38
Zones 2e & 3	0	96	91	86	80	74	70	66	59	53	48	44	41	39
	10	80	80	80	80	74	70	66	59	53	48	44	41	39
	20	62	62	62	62	62	62	62	59	53	48	44	41	39
	30	62	62	62	62	62	62	62	59	53	48	44	41	39
	40	55	55	55	55	55	55	55	55	53	48	44	41	39
	50	50	50	50	50	50	50	50	50	50	48	44	41	39
	60	46	46	46	46	46	46	46	46	46	46	44	41	39
	70	43	43	43	43	43	43	43	43	43	43	43	41	39
	80	40	40	40	40	40	40	40	40	40	40	40	40	39
	90	38	38	38	38	38	38	38	38	38	38	38	38	38

Notes:

1. Tables are based on critical rail span for load combinations as specified in chapter 2 of the ASCE 7-16 and allowable design loads per the 2015 Aluminum Design Manual.
2. Panels are assumed to be in portrait orientation with a maximum length of 67.5"

Structural ENGINUITY INC
Ingenuity in Engineering

SUNMODO®

Max Rail Spans for SunModo SMR100 System

Table 15b

Mean Roof Height: h ≤ 15 ft
Roof Angle: 7 < θ ≤ 20 degrees
Exposure Category: D

Panel Orientation: Portrait
North/South Support γ_E = 1.5
Roof Type : Hip h/B = ≥ 0.8

Roof Wind Zone	Ground Snow Load (psf)	Wind Speed (mph)												
		90	95	100	105	110	115	120	130	140	150	160	170	180
Zone 1	0	89	83	77	73	68	65	61	56	51	47	43	40	38
	10	80	80	77	73	68	65	61	56	51	47	43	40	38
	20	62	62	62	62	62	62	61	56	51	47	43	40	38
	30	62	62	62	62	62	62	61	56	51	47	43	40	38
	40	55	55	55	55	55	55	55	55	51	47	43	40	38
	50	50	50	50	50	50	50	50	50	50	47	43	40	38
	60	46	46	46	46	46	46	46	46	46	46	43	40	38
	70	43	43	43	43	43	43	43	43	43	43	43	40	38
	80	40	40	40	40	40	40	40	40	40	40	40	40	38
	90	38	38	38	38	38	38	38	38	38	38	38	38	38
Zone 2r	0	79	73	67	63	59	56	52	47	43	40	37	35	33
	10	79	73	67	63	59	56	52	47	43	40	37	35	33
	20	62	62	62	62	59	56	52	47	43	40	37	35	33
	30	62	62	62	62	59	56	52	47	43	40	37	35	33
	40	55	55	55	55	55	55	52	47	43	40	37	35	33
	50	50	50	50	50	50	50	50	47	43	40	37	35	33
	60	46	46	46	46	46	46	46	46	43	40	37	35	33
	70	43	43	43	43	43	43	43	43	43	40	37	35	33
	80	40	40	40	40	40	40	40	40	40	40	37	35	33
	90	38	38	38	38	38	38	38	38	38	38	37	35	33
Zones 2e & 3	0	74	69	64	60	56	53	50	45	41	38	36	33	31
	10	74	69	64	60	56	53	50	45	41	38	36	33	31
	20	62	62	62	60	56	53	50	45	41	38	36	33	31
	30	62	62	62	60	56	53	50	45	41	38	36	33	31
	40	55	55	55	55	55	53	50	45	41	38	36	33	31
	50	50	50	50	50	50	50	50	45	41	38	36	33	31
	60	46	46	46	46	46	46	46	45	41	38	36	33	31
	70	43	43	43	43	43	43	43	43	41	38	36	33	31
	80	40	40	40	40	40	40	40	40	40	38	36	33	31
	90	38	38	38	38	38	38	38	38	38	38	36	33	31

Notes:

1. Tables are based on critical rail span for load combinations as specified in chapter 2 of the ASCE 7-16 and allowable design loads per the 2015 Aluminum Design Manual.
2. Panels are assumed to be in portrait orientation with a maximum length of 67.5"

Structural ENGINUITY INC
Ingenuity in Engineering

SUNMODO®

Max Rail Spans for SunModo SMR100 System

Table 16a

Mean Roof Height: h ≤ 15 ft
Roof Angle: 7 < θ ≤ 20 degrees
Exposure Category: B

Panel Orientation: Portrait
North/South Support Y_E = 1
Roof Type : Hip h/B = ≤ 0.5

Roof Wind Zone	Ground Snow Load (psf)	Wind Speed (mph)												
		90	95	100	105	110	115	120	130	140	150	160	170	180
Zone 1	0	101	101	101	101	101	101	101	101	101	101	96	91	85
	10	80	80	80	80	80	80	80	80	78	77	76	74	73
	20	62	62	62	62	62	62	62	62	62	62	62	61	60
	30	62	62	62	62	62	62	62	62	62	62	62	61	60
	40	55	55	55	55	55	55	55	55	55	55	55	55	55
	50	50	50	50	50	50	50	50	50	50	50	50	50	50
	60	46	46	46	46	46	46	46	46	46	46	46	46	46
	70	43	43	43	43	43	43	43	43	43	43	43	43	43
	80	40	40	40	40	40	40	40	40	40	40	40	40	40
	90	38	38	38	38	38	38	38	38	38	38	38	38	38
Zone 2r	0	101	101	101	101	101	101	100	93	86	77	70	64	60
	10	80	80	80	80	80	80	80	80	78	77	70	64	60
	20	62	62	62	62	62	62	62	62	62	62	62	61	60
	30	62	62	62	62	62	62	62	62	62	62	62	61	60
	40	55	55	55	55	55	55	55	55	55	55	55	55	55
	50	50	50	50	50	50	50	50	50	50	50	50	50	50
	60	46	46	46	46	46	46	46	46	46	46	46	46	46
	70	43	43	43	43	43	43	43	43	43	43	43	43	43
	80	40	40	40	40	40	40	40	40	40	40	40	40	40
	90	38	38	38	38	38	38	38	38	38	38	38	38	38
Zones 2e & 3	0	101	101	101	101	101	101	101	101	98	92	86	78	72
	10	80	80	80	80	80	80	80	80	78	77	76	74	72
	20	62	62	62	62	62	62	62	62	62	62	62	61	60
	30	62	62	62	62	62	62	62	62	62	62	62	61	60
	40	55	55	55	55	55	55	55	55	55	55	55	55	55
	50	50	50	50	50	50	50	50	50	50	50	50	50	50
	60	46	46	46	46	46	46	46	46	46	46	46	46	46
	70	43	43	43	43	43	43	43	43	43	43	43	43	43
	80	40	40	40	40	40	40	40	40	40	40	40	40	40
	90	38	38	38	38	38	38	38	38	38	38	38	38	38

Notes:

1. Tables are based on critical rail span for load combinations as specified in chapter 2 of the ASCE 7-16 and allowable design loads per the 2015 Aluminum Design Manual.
2. Panels are assumed to be in portrait orientation with a maximum length of 67.5"

Structural ENGINUITY INC
Ingenuity in Engineering

SUNMODO®

Max Rail Spans for SunModo SMR100 System

Table 16b

Mean Roof Height: h ≤ 15 ft
Roof Angle: 7 < θ ≤ 20 degrees
Exposure Category: B

Panel Orientation: Portrait
North/South Support γ_E = 1.5
Roof Type : Hip h/B = ≤ 0.5

Roof Wind Zone	Ground Snow Load (psf)	Wind Speed (mph)												
		90	95	100	105	110	115	120	130	140	150	160	170	180
Zone 1	0	101	101	101	101	101	101	101	97	90	83	76	70	66
	10	80	80	80	80	80	80	80	80	78	77	76	70	66
	20	62	62	62	62	62	62	62	62	62	62	62	61	60
	30	62	62	62	62	62	62	62	62	62	62	62	61	60
	40	55	55	55	55	55	55	55	55	55	55	55	55	55
	50	50	50	50	50	50	50	50	50	50	50	50	50	50
	60	46	46	46	46	46	46	46	46	46	46	46	46	46
	70	43	43	43	43	43	43	43	43	43	43	43	43	43
	80	40	40	40	40	40	40	40	40	40	40	40	40	40
	90	38	38	38	38	38	38	38	38	38	38	38	38	38
Zone 2r	0	101	101	98	94	90	85	80	71	64	58	53	49	45
	10	80	80	80	80	80	80	80	71	64	58	53	49	45
	20	62	62	62	62	62	62	62	62	62	58	53	49	45
	30	62	62	62	62	62	62	62	62	62	58	53	49	45
	40	55	55	55	55	55	55	55	55	55	55	53	49	45
	50	50	50	50	50	50	50	50	50	50	50	50	49	45
	60	46	46	46	46	46	46	46	46	46	46	46	46	45
	70	43	43	43	43	43	43	43	43	43	43	43	43	43
	80	40	40	40	40	40	40	40	40	40	40	40	40	40
	90	38	38	38	38	38	38	38	38	38	38	38	38	38
Zones 2e & 3	0	101	101	101	101	101	97	94	86	77	70	64	59	55
	10	80	80	80	80	80	80	80	80	77	70	64	59	55
	20	62	62	62	62	62	62	62	62	62	62	62	59	55
	30	62	62	62	62	62	62	62	62	62	62	62	59	55
	40	55	55	55	55	55	55	55	55	55	55	55	55	55
	50	50	50	50	50	50	50	50	50	50	50	50	50	50
	60	46	46	46	46	46	46	46	46	46	46	46	46	46
	70	43	43	43	43	43	43	43	43	43	43	43	43	43
	80	40	40	40	40	40	40	40	40	40	40	40	40	40
	90	38	38	38	38	38	38	38	38	38	38	38	38	38

Notes:

1. Tables are based on critical rail span for load combinations as specified in chapter 2 of the ASCE 7-16 and allowable design loads per the 2015 Aluminum Design Manual.
2. Panels are assumed to be in portrait orientation with a maximum length of 67.5"

Structural ENGINUITY INC
Ingenuity in Engineering

SUNMODO®

Max Rail Spans for SunModo SMR100 System

Table 17a

Mean Roof Height: h ≤ 15 ft
Roof Angle: 7 < θ ≤ 20 degrees
Exposure Category: C

Panel Orientation: Portrait
North/South Support γ_E = 1
Roof Type : Hip h/B = ≤ 0.5

Roof Wind Zone	Ground Snow Load (psf)	Wind Speed (mph)												
		90	95	100	105	110	115	120	130	140	150	160	170	180
Zone 1	0	101	101	101	101	101	101	101	97	91	83	77	71	66
	10	80	80	80	80	79	78	77	76	74	72	70	68	66
	20	62	62	62	62	62	62	62	62	61	60	59	58	57
	30	62	62	62	62	62	62	62	62	61	60	59	58	57
	40	55	55	55	55	55	55	55	55	55	55	54	53	52
	50	50	50	50	50	50	50	50	50	50	50	50	49	49
	60	46	46	46	46	46	46	46	46	46	46	46	46	46
	70	43	43	43	43	43	43	43	43	43	43	43	43	43
	80	40	40	40	40	40	40	40	40	40	40	40	40	40
	90	38	38	38	38	38	38	38	38	38	38	38	38	38
Zone 2r	0	101	101	98	94	90	85	80	71	64	58	53	49	46
	10	80	80	80	80	79	78	77	71	64	58	53	49	46
	20	62	62	62	62	62	62	62	62	61	58	53	49	46
	30	62	62	62	62	62	62	62	62	61	58	53	49	46
	40	55	55	55	55	55	55	55	55	55	55	53	49	46
	50	50	50	50	50	50	50	50	50	50	50	50	49	46
	60	46	46	46	46	46	46	46	46	46	46	46	46	46
	70	43	43	43	43	43	43	43	43	43	43	43	43	43
	80	40	40	40	40	40	40	40	40	40	40	40	40	40
	90	38	38	38	38	38	38	38	38	38	38	38	38	38
Zones 2e & 3	0	101	101	101	101	101	98	94	87	78	70	64	59	55
	10	80	80	80	80	79	78	77	76	74	70	64	59	55
	20	62	62	62	62	62	62	62	62	61	60	59	58	55
	30	62	62	62	62	62	62	62	62	61	60	59	58	55
	40	55	55	55	55	55	55	55	55	55	55	54	53	52
	50	50	50	50	50	50	50	50	50	50	50	50	49	49
	60	46	46	46	46	46	46	46	46	46	46	46	46	46
	70	43	43	43	43	43	43	43	43	43	43	43	43	43
	80	40	40	40	40	40	40	40	40	40	40	40	40	40
	90	38	38	38	38	38	38	38	38	38	38	38	38	38

Notes:

1. Tables are based on critical rail span for load combinations as specified in chapter 2 of the ASCE 7-16 and allowable design loads per the 2015 Aluminum Design Manual.
2. Panels are assumed to be in portrait orientation with a maximum length of 67.5"

Structural ENGINUITY INC
Ingenuity in Engineering

SUNMODO®

Max Rail Spans for SunModo SMR100 System

Table 17b

Mean Roof Height: h ≤ 15 ft
Roof Angle: 7 < θ ≤ 20 degrees
Exposure Category: C

Panel Orientation: Portrait
North/South Support γ_E = 1.5
Roof Type : Hip h/B = ≤ 0.5

Roof Wind Zone	Ground Snow Load (psf)	Wind Speed (mph)												
		90	95	100	105	110	115	120	130	140	150	160	170	180
Zone 1	0	101	101	101	98	94	90	86	77	70	64	59	55	51
	10	80	80	80	80	79	78	77	76	70	64	59	55	51
	20	62	62	62	62	62	62	62	62	61	60	59	55	51
	30	62	62	62	62	62	62	62	62	61	60	59	55	51
	40	55	55	55	55	55	55	55	55	55	55	54	53	51
	50	50	50	50	50	50	50	50	50	50	50	50	49	49
	60	46	46	46	46	46	46	46	46	46	46	46	46	46
	70	43	43	43	43	43	43	43	43	43	43	43	43	43
	80	40	40	40	40	40	40	40	40	40	40	40	40	40
	90	38	38	38	38	38	38	38	38	38	38	38	38	38
Zone 2r	0	90	84	77	72	67	63	60	54	49	44	41	39	36
	10	80	80	77	72	67	63	60	54	49	44	41	39	36
	20	62	62	62	62	62	62	60	54	49	44	41	39	36
	30	62	62	62	62	62	62	60	54	49	44	41	39	36
	40	55	55	55	55	55	55	55	54	49	44	41	39	36
	50	50	50	50	50	50	50	50	50	49	44	41	39	36
	60	46	46	46	46	46	46	46	46	46	44	41	39	36
	70	43	43	43	43	43	43	43	43	43	43	41	39	36
	80	40	40	40	40	40	40	40	40	40	40	40	39	36
	90	38	38	38	38	38	38	38	38	38	38	38	38	36
Zones 2e & 3	0	101	97	92	88	82	77	73	65	59	53	49	45	42
	10	80	80	80	80	79	77	73	65	59	53	49	45	42
	20	62	62	62	62	62	62	62	62	59	53	49	45	42
	30	62	62	62	62	62	62	62	62	59	53	49	45	42
	40	55	55	55	55	55	55	55	55	55	53	49	45	42
	50	50	50	50	50	50	50	50	50	50	50	49	45	42
	60	46	46	46	46	46	46	46	46	46	46	46	45	42
	70	43	43	43	43	43	43	43	43	43	43	43	43	42
	80	40	40	40	40	40	40	40	40	40	40	40	40	40
	90	38	38	38	38	38	38	38	38	38	38	38	38	38

Notes:

1. Tables are based on critical rail span for load combinations as specified in chapter 2 of the ASCE 7-16 and allowable design loads per the 2015 Aluminum Design Manual.
2. Panels are assumed to be in portrait orientation with a maximum length of 67.5"

Structural ENGINUITY INC
Ingenuity in Engineering

SUNMODO®

Max Rail Spans for SunModo SMR100 System

Table 18a

Mean Roof Height: h ≤ 15 ft
Roof Angle: 7 < θ ≤ 20 degrees
Exposure Category: D

Panel Orientation: Portrait
North/South Support γ_E = 1
Roof Type : Hip h/B = ≤ 0.5

Roof Wind Zone	Ground Snow Load (psf)	Wind Speed (mph)												
		90	95	100	105	110	115	120	130	140	150	160	170	180
Zone 1	0	101	101	101	101	101	99	96	89	80	73	68	63	58
	10	80	80	79	78	77	76	75	73	71	69	67	63	58
	20	62	62	62	62	62	62	62	61	60	58	57	56	55
	30	62	62	62	62	62	62	62	61	60	58	57	56	55
	40	55	55	55	55	55	55	55	55	55	54	53	52	51
	50	50	50	50	50	50	50	50	50	50	50	49	48	47
	60	46	46	46	46	46	46	46	46	46	46	46	45	45
	70	43	43	43	43	43	43	43	43	43	43	43	43	42
	80	40	40	40	40	40	40	40	40	40	40	40	40	40
	90	38	38	38	38	38	38	38	38	38	38	38	38	38
Zone 2r	0	99	94	90	85	79	74	69	62	56	51	47	43	41
	10	80	80	79	78	77	74	69	62	56	51	47	43	41
	20	62	62	62	62	62	62	62	61	56	51	47	43	41
	30	62	62	62	62	62	62	62	61	56	51	47	43	41
	40	55	55	55	55	55	55	55	55	55	51	47	43	41
	50	50	50	50	50	50	50	50	50	50	50	47	43	41
	60	46	46	46	46	46	46	46	46	46	46	46	43	41
	70	43	43	43	43	43	43	43	43	43	43	43	43	41
	80	40	40	40	40	40	40	40	40	40	40	40	40	40
	90	38	38	38	38	38	38	38	38	38	38	38	38	38
Zones 2e & 3	0	101	101	101	97	93	89	85	75	68	62	57	52	48
	10	80	80	79	78	77	76	75	73	68	62	57	52	48
	20	62	62	62	62	62	62	62	61	60	58	57	52	48
	30	62	62	62	62	62	62	62	61	60	58	57	52	48
	40	55	55	55	55	55	55	55	55	55	54	53	52	48
	50	50	50	50	50	50	50	50	50	50	50	49	48	47
	60	46	46	46	46	46	46	46	46	46	46	46	45	45
	70	43	43	43	43	43	43	43	43	43	43	43	43	42
	80	40	40	40	40	40	40	40	40	40	40	40	40	40
	90	38	38	38	38	38	38	38	38	38	38	38	38	38

Notes:

1. Tables are based on critical rail span for load combinations as specified in chapter 2 of the ASCE 7-16 and allowable design loads per the 2015 Aluminum Design Manual.
2. Panels are assumed to be in portrait orientation with a maximum length of 67.5"

Structural ENGINUITY INC
Ingenuity in Engineering

SUNMODO®

Max Rail Spans for SunModo SMR100 System

Table 18b

Mean Roof Height: h ≤ 15 ft
Roof Angle: 7 < θ ≤ 20 degrees
Exposure Category: D

Panel Orientation: Portrait
North/South Support γ_E = 1.5
Roof Type : Hip h/B = ≤ 0.5

Roof Wind Zone	Ground Snow Load (psf)	Wind Speed (mph)												
		90	95	100	105	110	115	120	130	140	150	160	170	180
Zone 1	0	101	98	94	90	85	80	75	68	62	57	53	49	46
	10	80	80	79	78	77	76	75	68	62	57	53	49	46
	20	62	62	62	62	62	62	62	61	60	57	53	49	46
	30	62	62	62	62	62	62	62	61	60	57	53	49	46
	40	55	55	55	55	55	55	55	55	55	54	53	49	46
	50	50	50	50	50	50	50	50	50	50	50	49	48	46
	60	46	46	46	46	46	46	46	46	46	46	46	45	45
	70	43	43	43	43	43	43	43	43	43	43	43	43	42
	80	40	40	40	40	40	40	40	40	40	40	40	40	40
	90	38	38	38	38	38	38	38	38	38	38	38	38	38
Zone 2r	0	79	73	67	63	59	56	52	47	43	40	37	35	33
	10	79	73	67	63	59	56	52	47	43	40	37	35	33
	20	62	62	62	62	59	56	52	47	43	40	37	35	33
	30	62	62	62	62	59	56	52	47	43	40	37	35	33
	40	55	55	55	55	55	55	52	47	43	40	37	35	33
	50	50	50	50	50	50	50	50	47	43	40	37	35	33
	60	46	46	46	46	46	46	46	46	43	40	37	35	33
	70	43	43	43	43	43	43	43	43	43	40	37	35	33
	80	40	40	40	40	40	40	40	40	40	40	37	35	33
	90	38	38	38	38	38	38	38	38	38	38	37	35	33
Zones 2e & 3	0	93	89	82	77	72	67	63	57	52	47	43	40	38
	10	80	80	79	77	72	67	63	57	52	47	43	40	38
	20	62	62	62	62	62	62	62	57	52	47	43	40	38
	30	62	62	62	62	62	62	62	57	52	47	43	40	38
	40	55	55	55	55	55	55	55	55	52	47	43	40	38
	50	50	50	50	50	50	50	50	50	50	47	43	40	38
	60	46	46	46	46	46	46	46	46	46	46	43	40	38
	70	43	43	43	43	43	43	43	43	43	43	43	40	38
	80	40	40	40	40	40	40	40	40	40	40	40	40	38
	90	38	38	38	38	38	38	38	38	38	38	38	38	38

Notes:

1. Tables are based on critical rail span for load combinations as specified in chapter 2 of the ASCE 7-16 and allowable design loads per the 2015 Aluminum Design Manual.
2. Panels are assumed to be in portrait orientation with a maximum length of 67.5"

Max Rail Spans for SunModo SMR100 System

Table 19a

Mean Roof Height: h ≤ 15 ft
Roof Angle: 20 < θ ≤ 27 degrees
Exposure Category: B

Panel Orientation: Portrait
North/South Support γ_E = 1
Roof Type : Hip

Roof Wind Zone	Ground Snow Load (psf)	Wind Speed (mph)												
		90	95	100	105	110	115	120	130	140	150	160	170	180
Zone 1	0	101	101	101	101	101	101	101	101	101	101	99	94	89
	10	86	86	86	86	86	86	86	86	86	86	84	82	81
	20	73	73	73	73	73	73	73	73	73	72	71	70	69
	30	62	62	62	62	62	62	62	62	62	62	62	62	61
	40	55	55	55	55	55	55	55	55	55	55	55	55	55
	50	50	50	50	50	50	50	50	50	50	50	50	50	50
	60	46	46	46	46	46	46	46	46	46	46	46	46	46
	70	43	43	43	43	43	43	43	43	43	43	43	43	43
	80	40	40	40	40	40	40	40	40	40	40	40	40	40
	90	38	38	38	38	38	38	38	38	38	38	38	38	38
Zones 2e, 2r, & 3	0	101	101	101	101	101	101	101	101	94	89	83	75	69
	10	86	86	86	86	86	86	86	86	86	86	83	75	69
	20	73	73	73	73	73	73	73	73	73	72	71	70	69
	30	62	62	62	62	62	62	62	62	62	62	62	62	61
	40	55	55	55	55	55	55	55	55	55	55	55	55	55
	50	50	50	50	50	50	50	50	50	50	50	50	50	50
	60	46	46	46	46	46	46	46	46	46	46	46	46	46
	70	43	43	43	43	43	43	43	43	43	43	43	43	43
	80	40	40	40	40	40	40	40	40	40	40	40	40	40
	90	38	38	38	38	38	38	38	38	38	38	38	38	38

Notes:

1. Tables are based on critical rail span for load combinations as specified in chapter 2 of the ASCE 7-16 and allowable design loads per the 2015 Aluminum Design Manual.
2. Panels are assumed to be in portrait orientation with a maximum length of 67.5"

Max Rail Spans for SunModo SMR100 System

Table 19b	Mean Roof Height: h ≤ 15 ft Roof Angle: 20 < θ ≤ 27 degrees Exposure Category: B	Panel Orientation: Portrait North/South Support γ_E = 1.5 Roof Type : Hip

Roof Wind Zone	Ground Snow Load (psf)	Wind Speed (mph)												
		90	95	100	105	110	115	120	130	140	150	160	170	180
Zone 1	0	101	101	101	101	101	101	101	100	93	87	80	73	67
	10	86	86	86	86	86	86	86	86	86	86	80	73	67
	20	73	73	73	73	73	73	73	73	73	72	71	70	67
	30	62	62	62	62	62	62	62	62	62	62	62	62	61
	40	55	55	55	55	55	55	55	55	55	55	55	55	55
	50	50	50	50	50	50	50	50	50	50	50	50	50	50
	60	46	46	46	46	46	46	46	46	46	46	46	46	46
	70	43	43	43	43	43	43	43	43	43	43	43	43	43
	80	40	40	40	40	40	40	40	40	40	40	40	40	40
	90	38	38	38	38	38	38	38	38	38	38	38	38	38
Zones 2e, 2r, & 3	0	101	101	101	101	98	94	90	83	74	67	61	56	52
	10	86	86	86	86	86	86	86	83	74	67	61	56	52
	20	73	73	73	73	73	73	73	73	73	67	61	56	52
	30	62	62	62	62	62	62	62	62	62	62	61	56	52
	40	55	55	55	55	55	55	55	55	55	55	55	55	52
	50	50	50	50	50	50	50	50	50	50	50	50	50	50
	60	46	46	46	46	46	46	46	46	46	46	46	46	46
	70	43	43	43	43	43	43	43	43	43	43	43	43	43
	80	40	40	40	40	40	40	40	40	40	40	40	40	40
	90	38	38	38	38	38	38	38	38	38	38	38	38	38

Notes:

1. Tables are based on critical rail span for load combinations as specified in chapter 2 of the ASCE 7-16 and allowable design loads per the 2015 Aluminum Design Manual.
2. Panels are assumed to be in portrait orientation with a maximum length of 67.5"

Max Rail Spans for SunModo SMR100 System

Table 20a	Mean Roof Height: h ≤ 15 ft Roof Angle: 20 < θ ≤ 27 degrees Exposure Category: C	Panel Orientation: Portrait North/South Support γ_E = 1 Roof Type : Hip

Roof Wind Zone	Ground Snow Load (psf)	Wind Speed (mph)												
		90	95	100	105	110	115	120	130	140	150	160	170	180
Zone 1	0	101	101	101	101	101	101	101	100	93	88	81	73	67
	10	86	86	86	86	86	86	86	84	82	80	78	73	67
	20	73	73	73	73	73	73	72	71	70	68	67	65	64
	30	62	62	62	62	62	62	62	62	62	61	60	59	57
	40	55	55	55	55	55	55	55	55	55	55	54	54	53
	50	50	50	50	50	50	50	50	50	50	50	50	50	49
	60	46	46	46	46	46	46	46	46	46	46	46	46	46
	70	43	43	43	43	43	43	43	43	43	43	43	43	43
	80	40	40	40	40	40	40	40	40	40	40	40	40	40
	90	38	38	38	38	38	38	38	38	38	38	38	38	38
Zones 2e, 2r, & 3	0	101	101	101	101	98	94	91	84	75	67	61	56	52
	10	86	86	86	86	86	86	86	84	75	67	61	56	52
	20	73	73	73	73	73	73	72	71	70	67	61	56	52
	30	62	62	62	62	62	62	62	62	62	61	60	56	52
	40	55	55	55	55	55	55	55	55	55	55	54	54	52
	50	50	50	50	50	50	50	50	50	50	50	50	50	49
	60	46	46	46	46	46	46	46	46	46	46	46	46	46
	70	43	43	43	43	43	43	43	43	43	43	43	43	43
	80	40	40	40	40	40	40	40	40	40	40	40	40	40
	90	38	38	38	38	38	38	38	38	38	38	38	38	38

Notes:

1. Tables are based on critical rail span for load combinations as specified in chapter 2 of the ASCE 7-16 and allowable design loads per the 2015 Aluminum Design Manual.
2. Panels are assumed to be in portrait orientation with a maximum length of 67.5"

Max Rail Spans for SunModo SMR100 System

Table 20b	Mean Roof Height: h ≤ 15 ft Roof Angle: 20 < θ ≤ 27 degrees Exposure Category: C	Panel Orientation: Portrait North/South Support γ_E = 1.5 Roof Type : Hip

Roof Wind Zone	Ground Snow Load (psf)	Wind Speed (mph)												
		90	95	100	105	110	115	120	130	140	150	160	170	180
Zone 1	0	101	101	101	101	97	93	89	81	72	65	59	54	50
	10	86	86	86	86	86	86	86	81	72	65	59	54	50
	20	73	73	73	73	73	73	72	71	70	65	59	54	50
	30	62	62	62	62	62	62	62	62	62	61	59	54	50
	40	55	55	55	55	55	55	55	55	55	55	54	54	50
	50	50	50	50	50	50	50	50	50	50	50	50	50	49
	60	46	46	46	46	46	46	46	46	46	46	46	46	46
	70	43	43	43	43	43	43	43	43	43	43	43	43	43
	80	40	40	40	40	40	40	40	40	40	40	40	40	40
	90	38	38	38	38	38	38	38	38	38	38	38	38	38
Zones 2e, 2r, & 3	0	98	93	89	85	79	74	69	62	56	50	46	43	40
	10	86	86	86	85	79	74	69	62	56	50	46	43	40
	20	73	73	73	73	73	73	69	62	56	50	46	43	40
	30	62	62	62	62	62	62	62	62	56	50	46	43	40
	40	55	55	55	55	55	55	55	55	55	50	46	43	40
	50	50	50	50	50	50	50	50	50	50	50	46	43	40
	60	46	46	46	46	46	46	46	46	46	46	46	43	40
	70	43	43	43	43	43	43	43	43	43	43	43	43	40
	80	40	40	40	40	40	40	40	40	40	40	40	40	40
	90	38	38	38	38	38	38	38	38	38	38	38	38	38

Notes:

1. Tables are based on critical rail span for load combinations as specified in chapter 2 of the ASCE 7-16 and allowable design loads per the 2015 Aluminum Design Manual.
2. Panels are assumed to be in portrait orientation with a maximum length of 67.5"

Max Rail Spans for SunModo SMR100 System

Table 21a	Mean Roof Height: h ≤ 15 ft Roof Angle: 20 < θ ≤ 27 degrees Exposure Category: D	Panel Orientation: Portrait North/South Support γ_E = 1 Roof Type : Hip

Roof Wind Zone	Ground Snow Load (psf)	Wind Speed (mph)												
		90	95	100	105	110	115	120	130	140	150	160	170	180
Zone 1	0	101	101	101	101	101	101	99	91	85	77	70	64	58
	10	86	86	86	86	86	85	84	82	79	77	70	64	58
	20	73	73	73	73	72	72	71	69	68	66	65	63	58
	30	62	62	62	62	62	62	62	61	60	59	58	57	55
	40	55	55	55	55	55	55	55	55	55	54	53	52	51
	50	50	50	50	50	50	50	50	50	50	50	49	48	48
	60	46	46	46	46	46	46	46	46	46	46	46	45	45
	70	43	43	43	43	43	43	43	43	43	43	43	43	42
	80	40	40	40	40	40	40	40	40	40	40	40	40	40
	90	38	38	38	38	38	38	38	38	38	38	38	38	38
Zones 2e, 2r, & 3	0	101	101	98	94	90	86	82	72	65	59	53	49	46
	10	86	86	86	86	86	85	82	72	65	59	53	49	46
	20	73	73	73	73	72	72	71	69	65	59	53	49	46
	30	62	62	62	62	62	62	62	61	60	59	53	49	46
	40	55	55	55	55	55	55	55	55	55	54	53	49	46
	50	50	50	50	50	50	50	50	50	50	50	49	48	46
	60	46	46	46	46	46	46	46	46	46	46	46	45	45
	70	43	43	43	43	43	43	43	43	43	43	43	43	42
	80	40	40	40	40	40	40	40	40	40	40	40	40	40
	90	38	38	38	38	38	38	38	38	38	38	38	38	38

Notes:

1. Tables are based on critical rail span for load combinations as specified in chapter 2 of the ASCE 7-16 and allowable design loads per the 2015 Aluminum Design Manual.
2. Panels are assumed to be in portrait orientation with a maximum length of 67.5"

Structural ENGINUITY INC
Ingenuity in Engineering

SUNMODO®

Max Rail Spans for SunModo SMR100 System

Table 21b	Mean Roof Height: h ≤ 15 ft Roof Angle: 20 < θ ≤ 27 degrees Exposure Category: D	Panel Orientation: Portrait North/South Support γ_E = 1.5 Roof Type : Hip

Roof Wind Zone	Ground Snow Load (psf)	Wind Speed (mph)												
		90	95	100	105	110	115	120	130	140	150	160	170	180
Zone 1	0	101	101	97	92	88	85	79	70	63	57	52	48	44
	10	86	86	86	86	86	85	79	70	63	57	52	48	44
	20	73	73	73	73	72	72	71	69	63	57	52	48	44
	30	62	62	62	62	62	62	62	61	60	57	52	48	44
	40	55	55	55	55	55	55	55	55	55	54	52	48	44
	50	50	50	50	50	50	50	50	50	50	50	49	48	44
	60	46	46	46	46	46	46	46	46	46	46	46	45	44
	70	43	43	43	43	43	43	43	43	43	43	43	43	42
	80	40	40	40	40	40	40	40	40	40	40	40	40	40
	90	38	38	38	38	38	38	38	38	38	38	38	38	38
Zones 2e, 2r, & 3	0	90	85	79	73	68	64	60	54	49	44	41	38	36
	10	86	85	79	73	68	64	60	54	49	44	41	38	36
	20	73	73	73	73	68	64	60	54	49	44	41	38	36
	30	62	62	62	62	62	62	60	54	49	44	41	38	36
	40	55	55	55	55	55	55	55	54	49	44	41	38	36
	50	50	50	50	50	50	50	50	50	49	44	41	38	36
	60	46	46	46	46	46	46	46	46	46	44	41	38	36
	70	43	43	43	43	43	43	43	43	43	43	41	38	36
	80	40	40	40	40	40	40	40	40	40	40	40	38	36
	90	38	38	38	38	38	38	38	38	38	38	38	38	36

Notes:

1. Tables are based on critical rail span for load combinations as specified in chapter 2 of the ASCE 7-16 and allowable design loads per the 2015 Aluminum Design Manual.
2. Panels are assumed to be in portrait orientation with a maximum length of 67.5"

Structural ENGINUITY INC
Ingenuity in Engineering

SUNMODO®

Max Rail Spans for SunModo SMR100 System

Table 22a

Mean Roof Height: h ≤ 15 ft
Roof Angle: 27 < θ ≤ 45 degrees
Exposure Category: B

Panel Orientation: Portrait
North/South Support γ_E = 1
Roof Type : Hip

Roof Wind Zone	Ground Snow Load (psf)	Wind Speed (mph)												
		90	95	100	105	110	115	120	130	140	150	160	170	180
Zone 1	0	101	101	101	101	101	101	101	101	101	100	94	89	85
	10	86	86	86	86	86	86	86	86	86	86	85	83	82
	20	75	75	75	75	75	75	75	75	75	74	73	71	70
	30	64	64	64	64	64	64	64	64	64	64	64	64	63
	40	57	57	57	57	57	57	57	57	57	57	57	57	57
	50	52	52	52	52	52	52	52	52	52	52	52	52	52
	60	48	48	48	48	48	48	48	48	48	48	48	48	48
	70	45	45	45	45	45	45	45	45	45	45	45	45	45
	80	42	42	42	42	42	42	42	42	42	42	42	42	42
	90	40	40	40	40	40	40	40	40	40	40	40	40	40
Zone 2e	0	101	101	101	101	101	101	101	101	101	99	92	87	82
	10	86	86	86	86	86	86	86	86	86	86	85	83	82
	20	75	75	75	75	75	75	75	75	75	74	73	71	70
	30	64	64	64	64	64	64	64	64	64	64	64	64	63
	40	57	57	57	57	57	57	57	57	57	57	57	57	57
	50	52	52	52	52	52	52	52	52	52	52	52	52	52
	60	48	48	48	48	48	48	48	48	48	48	48	48	48
	70	45	45	45	45	45	45	45	45	45	45	45	45	45
	80	42	42	42	42	42	42	42	42	42	42	42	42	42
	90	40	40	40	40	40	40	40	40	40	40	40	40	40
Zone 2r	0	101	101	101	101	101	101	101	97	90	85	79	71	65
	10	86	86	86	86	86	86	86	86	86	85	79	71	65
	20	75	75	75	75	75	75	75	75	75	74	73	71	65
	30	64	64	64	64	64	64	64	64	64	64	64	64	63
	40	57	57	57	57	57	57	57	57	57	57	57	57	57
	50	52	52	52	52	52	52	52	52	52	52	52	52	52
	60	48	48	48	48	48	48	48	48	48	48	48	48	48
	70	45	45	45	45	45	45	45	45	45	45	45	45	45
	80	42	42	42	42	42	42	42	42	42	42	42	42	42
	90	40	40	40	40	40	40	40	40	40	40	40	40	40
Zone 3	0	101	101	101	101	101	101	101	100	93	86	81	71	64
	10	86	86	86	86	86	86	86	86	86	86	81	71	64
	20	75	75	75	75	75	75	75	75	75	74	73	71	64
	30	64	64	64	64	64	64	64	64	64	64	64	64	63
	40	57	57	57	57	57	57	57	57	57	57	57	57	57
	50	52	52	52	52	52	52	52	52	52	52	52	52	52
	60	48	48	48	48	48	48	48	48	48	48	48	48	48
	70	45	45	45	45	45	45	45	45	45	45	45	45	45
	80	42	42	42	42	42	42	42	42	42	42	42	42	42
	90	40	40	40	40	40	40	40	40	40	40	40	40	40

Notes:

1. Tables are based on critical rail span for load combinations as specified in chapter 2 of the ASCE 7-16 and allowable design loads per the 2015 Aluminum Design Manual.
2. Panels are assumed to be in portrait orientation with a maximum length of 67.5"

Structural ENGINUITY INC
Ingenuity in Engineering

SUNMODO®

Max Rail Spans for SunModo SMR100 System

Table 22b

Mean Roof Height: h ≤ 15 ft
Roof Angle: 27 < θ ≤ 45 degrees
Exposure Category: B

Panel Orientation: Portrait
North/South Support γ_E = 1.5
Roof Type : Hip

Roof Wind Zone	Ground Snow Load (psf)	Wind Speed (mph)												
		90	95	100	105	110	115	120	130	140	150	160	170	180
Zone 1	0	101	101	101	101	101	101	101	95	89	83	77	70	64
	10	86	86	86	86	86	86	86	86	86	83	77	70	64
	20	75	75	75	75	75	75	75	75	75	74	73	70	64
	30	64	64	64	64	64	64	64	64	64	64	64	64	63
	40	57	57	57	57	57	57	57	57	57	57	57	57	57
	50	52	52	52	52	52	52	52	52	52	52	52	52	52
	60	48	48	48	48	48	48	48	48	48	48	48	48	48
	70	45	45	45	45	45	45	45	45	45	45	45	45	45
	80	42	42	42	42	42	42	42	42	42	42	42	42	42
	90	40	40	40	40	40	40	40	40	40	40	40	40	40
Zone 2e	0	101	101	101	101	101	101	101	93	86	80	71	64	58
	10	86	86	86	86	86	86	86	86	86	80	71	64	58
	20	75	75	75	75	75	75	75	75	75	74	71	64	58
	30	64	64	64	64	64	64	64	64	64	64	64	64	58
	40	57	57	57	57	57	57	57	57	57	57	57	57	57
	50	52	52	52	52	52	52	52	52	52	52	52	52	52
	60	48	48	48	48	48	48	48	48	48	48	48	48	48
	70	45	45	45	45	45	45	45	45	45	45	45	45	45
	80	42	42	42	42	42	42	42	42	42	42	42	42	42
	90	40	40	40	40	40	40	40	40	40	40	40	40	40
Zone 2r	0	101	101	101	98	94	90	86	80	70	63	57	52	48
	10	86	86	86	86	86	86	86	80	70	63	57	52	48
	20	75	75	75	75	75	75	75	75	70	63	57	52	48
	30	64	64	64	64	64	64	64	64	64	63	57	52	48
	40	57	57	57	57	57	57	57	57	57	57	57	52	48
	50	52	52	52	52	52	52	52	52	52	52	52	52	48
	60	48	48	48	48	48	48	48	48	48	48	48	48	48
	70	45	45	45	45	45	45	45	45	45	45	45	45	45
	80	42	42	42	42	42	42	42	42	42	42	42	42	42
	90	40	40	40	40	40	40	40	40	40	40	40	40	40
Zone 3	0	101	101	101	101	97	92	88	81	70	62	55	50	45
	10	86	86	86	86	86	86	86	81	70	62	55	50	45
	20	75	75	75	75	75	75	75	75	70	62	55	50	45
	30	64	64	64	64	64	64	64	64	64	62	55	50	45
	40	57	57	57	57	57	57	57	57	57	57	55	50	45
	50	52	52	52	52	52	52	52	52	52	52	52	50	45
	60	48	48	48	48	48	48	48	48	48	48	48	48	45
	70	45	45	45	45	45	45	45	45	45	45	45	45	45
	80	42	42	42	42	42	42	42	42	42	42	42	42	42
	90	40	40	40	40	40	40	40	40	40	40	40	40	40

Notes:

1. Tables are based on critical rail span for load combinations as specified in chapter 2 of the ASCE 7-16 and allowable design loads per the 2015 Aluminum Design Manual.
2. Panels are assumed to be in portrait orientation with a maximum length of 67.5"

Structural ENGINUITY INC
Ingenuity in Engineering

SUNMODO®

Max Rail Spans for SunModo SMR100 System

Table 23a

Mean Roof Height: h ≤ 15 ft
Roof Angle: 27 < θ ≤ 45 degrees
Exposure Category: C

Panel Orientation: Portrait
North/South Support γ_E = 1
Roof Type : Hip

Roof Wind Zone	Ground Snow Load (psf)	Wind Speed (mph)												
		90	95	100	105	110	115	120	130	140	150	160	170	180
Zone 1	0	101	101	101	101	101	101	101	95	89	84	77	70	64
	10	86	86	86	86	86	86	86	85	83	81	77	70	64
	20	75	75	75	75	75	75	74	73	71	70	69	67	64
	30	64	64	64	64	64	64	64	64	64	63	61	60	59
	40	57	57	57	57	57	57	57	57	57	57	56	55	54
	50	52	52	52	52	52	52	52	52	52	52	52	51	51
	60	48	48	48	48	48	48	48	48	48	48	48	48	48
	70	45	45	45	45	45	45	45	45	45	45	45	45	45
	80	42	42	42	42	42	42	42	42	42	42	42	42	42
	90	40	40	40	40	40	40	40	40	40	40	40	40	40
Zone 2e	0	101	101	101	101	101	101	101	93	86	81	71	64	58
	10	86	86	86	86	86	86	86	85	83	81	71	64	58
	20	75	75	75	75	75	75	74	73	71	70	69	64	58
	30	64	64	64	64	64	64	64	64	64	63	61	60	58
	40	57	57	57	57	57	57	57	57	57	57	56	55	54
	50	52	52	52	52	52	52	52	52	52	52	52	51	51
	60	48	48	48	48	48	48	48	48	48	48	48	48	48
	70	45	45	45	45	45	45	45	45	45	45	45	45	45
	80	42	42	42	42	42	42	42	42	42	42	42	42	42
	90	40	40	40	40	40	40	40	40	40	40	40	40	40
Zone 2r	0	101	101	101	98	94	90	87	80	71	63	57	52	48
	10	86	86	86	86	86	86	86	80	71	63	57	52	48
	20	75	75	75	75	75	75	74	73	71	63	57	52	48
	30	64	64	64	64	64	64	64	64	64	63	57	52	48
	40	57	57	57	57	57	57	57	57	57	57	56	52	48
	50	52	52	52	52	52	52	52	52	52	52	52	51	48
	60	48	48	48	48	48	48	48	48	48	48	48	48	48
	70	45	45	45	45	45	45	45	45	45	45	45	45	45
	80	42	42	42	42	42	42	42	42	42	42	42	42	42
	90	40	40	40	40	40	40	40	40	40	40	40	40	40
Zone 3	0	101	101	101	101	97	92	89	82	71	62	55	50	46
	10	86	86	86	86	86	86	86	82	71	62	55	50	46
	20	75	75	75	75	75	75	74	73	71	62	55	50	46
	30	64	64	64	64	64	64	64	64	64	62	55	50	46
	40	57	57	57	57	57	57	57	57	57	57	55	50	46
	50	52	52	52	52	52	52	52	52	52	52	52	50	46
	60	48	48	48	48	48	48	48	48	48	48	48	48	46
	70	45	45	45	45	45	45	45	45	45	45	45	45	45
	80	42	42	42	42	42	42	42	42	42	42	42	42	42
	90	40	40	40	40	40	40	40	40	40	40	40	40	40

Notes:

1. Tables are based on critical rail span for load combinations as specified in chapter 2 of the ASCE 7-16 and allowable design loads per the 2015 Aluminum Design Manual.
2. Panels are assumed to be in portrait orientation with a maximum length of 67.5"

Structural ENGINUITY INC
Ingenuity in Engineering

SUNMODO®

Max Rail Spans for SunModo SMR100 System

Table 23b

Mean Roof Height: h ≤ 15 ft
Roof Angle: 27 < θ ≤ 45 degrees
Exposure Category: C

Panel Orientation: Portrait
North/South Support γ_E = 1.5
Roof Type : Hip

Roof Wind Zone	Ground Snow Load (psf)	Wind Speed (mph)												
		90	95	100	105	110	115	120	130	140	150	160	170	180
Zone 1	0	101	101	100	96	92	88	85	78	69	62	57	52	48
	10	86	86	86	86	86	86	85	78	69	62	57	52	48
	20	75	75	75	75	75	75	74	73	69	62	57	52	48
	30	64	64	64	64	64	64	64	64	64	62	57	52	48
	40	57	57	57	57	57	57	57	57	57	57	56	52	48
	50	52	52	52	52	52	52	52	52	52	52	52	51	48
	60	48	48	48	48	48	48	48	48	48	48	48	48	48
	70	45	45	45	45	45	45	45	45	45	45	45	45	45
	80	42	42	42	42	42	42	42	42	42	42	42	42	42
	90	40	40	40	40	40	40	40	40	40	40	40	40	40
Zone 2e	0	101	101	99	94	90	86	83	72	63	56	50	46	42
	10	86	86	86	86	86	86	83	72	63	56	50	46	42
	20	75	75	75	75	75	75	74	72	63	56	50	46	42
	30	64	64	64	64	64	64	64	64	63	56	50	46	42
	40	57	57	57	57	57	57	57	57	57	56	50	46	42
	50	52	52	52	52	52	52	52	52	52	52	50	46	42
	60	48	48	48	48	48	48	48	48	48	48	48	46	42
	70	45	45	45	45	45	45	45	45	45	45	45	45	42
	80	42	42	42	42	42	42	42	42	42	42	42	42	42
	90	40	40	40	40	40	40	40	40	40	40	40	40	40
Zone 2r	0	94	89	85	81	75	70	65	57	51	46	42	39	37
	10	86	86	85	81	75	70	65	57	51	46	42	39	37
	20	75	75	75	75	75	70	65	57	51	46	42	39	37
	30	64	64	64	64	64	64	64	57	51	46	42	39	37
	40	57	57	57	57	57	57	57	57	51	46	42	39	37
	50	52	52	52	52	52	52	52	52	51	46	42	39	37
	60	48	48	48	48	48	48	48	48	48	46	42	39	37
	70	45	45	45	45	45	45	45	45	45	45	42	39	37
	80	42	42	42	42	42	42	42	42	42	42	42	39	37
	90	40	40	40	40	40	40	40	40	40	40	40	39	37
Zone 3	0	97	91	87	83	76	70	64	56	49	44	40	37	35
	10	86	86	86	83	76	70	64	56	49	44	40	37	35
	20	75	75	75	75	75	70	64	56	49	44	40	37	35
	30	64	64	64	64	64	64	64	56	49	44	40	37	35
	40	57	57	57	57	57	57	57	56	49	44	40	37	35
	50	52	52	52	52	52	52	52	52	49	44	40	37	35
	60	48	48	48	48	48	48	48	48	48	44	40	37	35
	70	45	45	45	45	45	45	45	45	45	44	40	37	35
	80	42	42	42	42	42	42	42	42	42	42	40	37	35
	90	40	40	40	40	40	40	40	40	40	40	40	37	35

Notes:

1. Tables are based on critical rail span for load combinations as specified in chapter 2 of the ASCE 7-16 and allowable design loads per the 2015 Aluminum Design Manual.
2. Panels are assumed to be in portrait orientation with a maximum length of 67.5"

Structural ENGINUITY INC
Ingenuity in Engineering

SUNMODO®

Max Rail Spans for SunModo SMR100 System

Table 24a

Mean Roof Height: h ≤ 15 ft
Roof Angle: 27 < θ ≤ 45 degrees
Exposure Category: D

Panel Orientation: Portrait
North/South Support γ_E = 1
Roof Type : Hip

Roof Wind Zone	Ground Snow Load (psf)	Wind Speed (mph)												
		90	95	100	105	110	115	120	130	140	150	160	170	180
Zone 1	0	101	101	101	101	101	97	93	87	82	73	66	61	56
	10	86	86	86	86	86	86	85	82	80	73	66	61	56
	20	75	75	75	75	74	73	72	71	69	68	66	61	56
	30	64	64	64	64	64	64	64	63	62	61	60	58	56
	40	57	57	57	57	57	57	57	57	57	56	55	54	53
	50	52	52	52	52	52	52	52	52	52	52	51	50	49
	60	48	48	48	48	48	48	48	48	48	48	48	47	46
	70	45	45	45	45	45	45	45	45	45	45	45	45	44
	80	42	42	42	42	42	42	42	42	42	42	42	42	42
	90	40	40	40	40	40	40	40	40	40	40	40	40	40
Zone 2e	0	101	101	101	101	100	96	92	85	76	67	60	54	50
	10	86	86	86	86	86	86	85	82	76	67	60	54	50
	20	75	75	75	75	74	73	72	71	69	67	60	54	50
	30	64	64	64	64	64	64	64	63	62	61	60	54	50
	40	57	57	57	57	57	57	57	57	57	56	55	54	50
	50	52	52	52	52	52	52	52	52	52	52	51	50	49
	60	48	48	48	48	48	48	48	48	48	48	48	47	46
	70	45	45	45	45	45	45	45	45	45	45	45	45	44
	80	42	42	42	42	42	42	42	42	42	42	42	42	42
	90	40	40	40	40	40	40	40	40	40	40	40	40	40
Zone 2r	0	101	99	94	90	86	83	78	68	60	54	49	45	42
	10	86	86	86	86	86	83	78	68	60	54	49	45	42
	20	75	75	75	75	74	73	72	68	60	54	49	45	42
	30	64	64	64	64	64	64	64	63	60	54	49	45	42
	40	57	57	57	57	57	57	57	57	57	54	49	45	42
	50	52	52	52	52	52	52	52	52	52	52	49	45	42
	60	48	48	48	48	48	48	48	48	48	48	48	45	42
	70	45	45	45	45	45	45	45	45	45	45	45	45	42
	80	42	42	42	42	42	42	42	42	42	42	42	42	42
	90	40	40	40	40	40	40	40	40	40	40	40	40	40
Zone 3	0	101	101	97	92	88	84	80	68	59	53	47	43	40
	10	86	86	86	86	86	84	80	68	59	53	47	43	40
	20	75	75	75	75	74	73	72	68	59	53	47	43	40
	30	64	64	64	64	64	64	64	63	59	53	47	43	40
	40	57	57	57	57	57	57	57	57	57	53	47	43	40
	50	52	52	52	52	52	52	52	52	52	52	47	43	40
	60	48	48	48	48	48	48	48	48	48	48	47	43	40
	70	45	45	45	45	45	45	45	45	45	45	45	43	40
	80	42	42	42	42	42	42	42	42	42	42	42	42	40
	90	40	40	40	40	40	40	40	40	40	40	40	40	40

Notes:

1. Tables are based on critical rail span for load combinations as specified in chapter 2 of the ASCE 7-16 and allowable design loads per the 2015 Aluminum Design Manual.
2. Panels are assumed to be in portrait orientation with a maximum length of 67.5"

Structural ENGINUITY INC
Ingenuity in Engineering

SUNMODO®

Max Rail Spans for SunModo SMR100 System

Table 24b

Mean Roof Height: h ≤ 15 ft
Roof Angle: 27 < θ ≤ 45 degrees
Exposure Category: D

Panel Orientation: Portrait
North/South Support γ_E = 1.5
Roof Type : Hip

Roof Wind Zone	Ground Snow Load (psf)	Wind Speed (mph)												
		90	95	100	105	110	115	120	130	140	150	160	170	180
Zone 1	0	101	96	92	88	84	81	76	67	60	54	49	45	42
	10	86	86	86	86	84	81	76	67	60	54	49	45	42
	20	75	75	75	75	74	73	72	67	60	54	49	45	42
	30	64	64	64	64	64	64	64	63	60	54	49	45	42
	40	57	57	57	57	57	57	57	57	57	54	49	45	42
	50	52	52	52	52	52	52	52	52	52	52	49	45	42
	60	48	48	48	48	48	48	48	48	48	48	48	45	42
	70	45	45	45	45	45	45	45	45	45	45	45	45	42
	80	42	42	42	42	42	42	42	42	42	42	42	42	42
	90	40	40	40	40	40	40	40	40	40	40	40	40	40
Zone 2e	0	100	94	90	86	82	76	70	61	54	48	43	40	37
	10	86	86	86	86	82	76	70	61	54	48	43	40	37
	20	75	75	75	75	74	73	70	61	54	48	43	40	37
	30	64	64	64	64	64	64	64	61	54	48	43	40	37
	40	57	57	57	57	57	57	57	57	54	48	43	40	37
	50	52	52	52	52	52	52	52	52	52	48	43	40	37
	60	48	48	48	48	48	48	48	48	48	48	43	40	37
	70	45	45	45	45	45	45	45	45	45	45	43	40	37
	80	42	42	42	42	42	42	42	42	42	42	42	40	37
	90	40	40	40	40	40	40	40	40	40	40	40	40	37
Zone 2r	0	86	82	75	69	64	60	56	50	45	41	38	35	33
	10	86	82	75	69	64	60	56	50	45	41	38	35	33
	20	75	75	75	69	64	60	56	50	45	41	38	35	33
	30	64	64	64	64	64	60	56	50	45	41	38	35	33
	40	57	57	57	57	57	57	56	50	45	41	38	35	33
	50	52	52	52	52	52	52	52	50	45	41	38	35	33
	60	48	48	48	48	48	48	48	48	45	41	38	35	33
	70	45	45	45	45	45	45	45	45	45	41	38	35	33
	80	42	42	42	42	42	42	42	42	42	41	38	35	33
	90	40	40	40	40	40	40	40	40	40	40	38	35	33
Zone 3	0	88	83	76	69	63	59	54	48	42	39	36	33	31
	10	86	83	76	69	63	59	54	48	42	39	36	33	31
	20	75	75	75	69	63	59	54	48	42	39	36	33	31
	30	64	64	64	64	63	59	54	48	42	39	36	33	31
	40	57	57	57	57	57	57	54	48	42	39	36	33	31
	50	52	52	52	52	52	52	52	48	42	39	36	33	31
	60	48	48	48	48	48	48	48	48	42	39	36	33	31
	70	45	45	45	45	45	45	45	45	42	39	36	33	31
	80	42	42	42	42	42	42	42	42	42	39	36	33	31
	90	40	40	40	40	40	40	40	40	40	39	36	33	31

Notes:

1. Tables are based on critical rail span for load combinations as specified in chapter 2 of the ASCE 7-16 and allowable design loads per the 2015 Aluminum Design Manual.
2. Panels are assumed to be in portrait orientation with a maximum length of 67.5"

Structural ENGINUITY INC
Ingenuity in Engineering

SUNMODO®

Max Rail Spans for SunModo SMR100 System

Table 25a

Mean Roof Height: 15 < h ≤ 30 ft
Roof Angle: 0 < θ ≤ 7 degrees
Exposure Category: B

Panel Orientation: Portrait
North/South Support γ_E = 1
Roof Type : Gable

Roof Wind Zone	Ground Snow Load (psf)	Wind Speed (mph)												
		90	95	100	105	110	115	120	130	140	150	160	170	180
Zone 1'	0	101	101	101	101	101	101	101	101	101	101	101	98	93
	10	87	87	87	87	87	87	87	87	87	87	87	87	87
	20	69	69	69	69	69	69	69	69	69	69	69	69	69
	30	68	68	68	68	68	68	68	68	68	68	68	68	68
	40	60	60	60	60	60	60	60	60	60	60	60	60	60
	50	54	54	54	54	54	54	54	54	54	54	54	54	54
	60	50	50	50	50	50	50	50	50	50	50	50	50	50
	70	46	46	46	46	46	46	46	46	46	46	46	46	46
	80	44	44	44	44	44	44	44	44	44	44	44	44	44
	90	41	41	41	41	41	41	41	41	41	41	41	41	41
Zone 1	0	101	101	101	101	101	101	101	97	91	82	75	69	64
	10	87	87	87	87	87	87	87	87	87	82	75	69	64
	20	69	69	69	69	69	69	69	69	69	69	69	69	64
	30	68	68	68	68	68	68	68	68	68	68	68	68	64
	40	60	60	60	60	60	60	60	60	60	60	60	60	60
	50	54	54	54	54	54	54	54	54	54	54	54	54	54
	60	50	50	50	50	50	50	50	50	50	50	50	50	50
	70	46	46	46	46	46	46	46	46	46	46	46	46	46
	80	44	44	44	44	44	44	44	44	44	44	44	44	44
	90	41	41	41	41	41	41	41	41	41	41	41	41	41
Zone 2	0	101	101	101	101	99	95	91	81	73	67	61	57	53
	10	87	87	87	87	87	87	87	81	73	67	61	57	53
	20	69	69	69	69	69	69	69	69	69	67	61	57	53
	30	68	68	68	68	68	68	68	68	68	67	61	57	53
	40	60	60	60	60	60	60	60	60	60	60	60	57	53
	50	54	54	54	54	54	54	54	54	54	54	54	54	53
	60	50	50	50	50	50	50	50	50	50	50	50	50	50
	70	46	46	46	46	46	46	46	46	46	46	46	46	46
	80	44	44	44	44	44	44	44	44	44	44	44	44	44
	90	41	41	41	41	41	41	41	41	41	41	41	41	41
Zone 3	0	101	99	94	89	83	78	73	66	59	54	50	46	43
	10	87	87	87	87	83	78	73	66	59	54	50	46	43
	20	69	69	69	69	69	69	69	66	59	54	50	46	43
	30	68	68	68	68	68	68	68	66	59	54	50	46	43
	40	60	60	60	60	60	60	60	60	59	54	50	46	43
	50	54	54	54	54	54	54	54	54	54	54	50	46	43
	60	50	50	50	50	50	50	50	50	50	50	50	46	43
	70	46	46	46	46	46	46	46	46	46	46	46	46	43
	80	44	44	44	44	44	44	44	44	44	44	44	44	43
	90	41	41	41	41	41	41	41	41	41	41	41	41	41

Notes:

1. Tables are based on critical rail span for load combinations as specified in chapter 2 of the ASCE 7-16 and allowable design loads per the 2015 Aluminum Design Manual.
2. Panels are assumed to be in portrait orientation with a maximum length of 67.5"

Structural ENGINUITY INC
Ingenuity in Engineering

SUNMODO®

Max Rail Spans for SunModo SMR100 System

Table 25b

Mean Roof Height: 15 < h ≤ 30 ft
Roof Angle: 0 < θ ≤ 7 degrees
Exposure Category: B

Panel Orientation: Portrait
North/South Support γ_E = 1.5
Roof Type : Gable

Roof Wind Zone	Ground Snow Load (psf)	Wind Speed (mph)												
		90	95	100	105	110	115	120	130	140	150	160	170	180
Zone 1'	0	101	101	101	101	101	101	101	101	97	91	84	78	72
	10	87	87	87	87	87	87	87	87	87	87	84	78	72
	20	69	69	69	69	69	69	69	69	69	69	69	69	69
	30	68	68	68	68	68	68	68	68	68	68	68	68	68
	40	60	60	60	60	60	60	60	60	60	60	60	60	60
	50	54	54	54	54	54	54	54	54	54	54	54	54	54
	60	50	50	50	50	50	50	50	50	50	50	50	50	50
	70	46	46	46	46	46	46	46	46	46	46	46	46	46
	80	44	44	44	44	44	44	44	44	44	44	44	44	44
	90	41	41	41	41	41	41	41	41	41	41	41	41	41
Zone 1	0	101	101	101	98	94	90	85	76	68	62	57	53	49
	10	87	87	87	87	87	87	85	76	68	62	57	53	49
	20	69	69	69	69	69	69	69	69	68	62	57	53	49
	30	68	68	68	68	68	68	68	68	68	62	57	53	49
	40	60	60	60	60	60	60	60	60	60	60	57	53	49
	50	54	54	54	54	54	54	54	54	54	54	54	53	49
	60	50	50	50	50	50	50	50	50	50	50	50	50	49
	70	46	46	46	46	46	46	46	46	46	46	46	46	46
	80	44	44	44	44	44	44	44	44	44	44	44	44	44
	90	41	41	41	41	41	41	41	41	41	41	41	41	41
Zone 2	0	98	94	88	82	77	73	69	62	56	51	47	44	41
	10	87	87	87	82	77	73	69	62	56	51	47	44	41
	20	69	69	69	69	69	69	69	62	56	51	47	44	41
	30	68	68	68	68	68	68	68	62	56	51	47	44	41
	40	60	60	60	60	60	60	60	60	56	51	47	44	41
	50	54	54	54	54	54	54	54	54	54	51	47	44	41
	60	50	50	50	50	50	50	50	50	50	50	47	44	41
	70	46	46	46	46	46	46	46	46	46	46	46	44	41
	80	44	44	44	44	44	44	44	44	44	44	44	44	41
	90	41	41	41	41	41	41	41	41	41	41	41	41	41
Zone 3	0	83	77	71	67	63	59	56	50	45	42	39	37	34
	10	83	77	71	67	63	59	56	50	45	42	39	37	34
	20	69	69	69	67	63	59	56	50	45	42	39	37	34
	30	68	68	68	67	63	59	56	50	45	42	39	37	34
	40	60	60	60	60	60	59	56	50	45	42	39	37	34
	50	54	54	54	54	54	54	54	50	45	42	39	37	34
	60	50	50	50	50	50	50	50	50	45	42	39	37	34
	70	46	46	46	46	46	46	46	46	45	42	39	37	34
	80	44	44	44	44	44	44	44	44	44	42	39	37	34
	90	41	41	41	41	41	41	41	41	41	41	39	37	34

Notes:

1. Tables are based on critical rail span for load combinations as specified in chapter 2 of the ASCE 7-16 and allowable design loads per the 2015 Aluminum Design Manual.
2. Panels are assumed to be in portrait orientation with a maximum length of 67.5"

Structural ENGINUITY INC
Ingenuity in Engineering

SUNMODO®

Max Rail Spans for SunModo SMR100 System

Table 26a

Mean Roof Height: 15 < h ≤ 30 ft
Roof Angle: 0 < θ ≤ 7 degrees
Exposure Category: C

Panel Orientation: Portrait
North/South Support γ_E = 1
Roof Type : Gable

Roof Wind Zone	Ground Snow Load (psf)	Wind Speed (mph)												
		90	95	100	105	110	115	120	130	140	150	160	170	180
Zone 1'	0	101	101	101	101	101	101	101	101	100	94	88	81	75
	10	87	87	87	87	87	87	87	87	87	87	87	81	75
	20	69	69	69	69	69	69	69	69	69	69	69	69	69
	30	68	68	68	68	68	68	68	68	68	68	68	68	68
	40	60	60	60	60	60	60	60	60	60	60	60	60	60
	50	54	54	54	54	54	54	54	54	54	54	54	54	54
	60	50	50	50	50	50	50	50	50	50	50	50	50	50
	70	46	46	46	46	46	46	46	46	46	46	46	46	46
	80	44	44	44	44	44	44	44	44	44	44	44	44	44
	90	41	41	41	41	41	41	41	41	41	41	41	41	41
Zone 1	0	101	101	101	101	97	93	89	79	72	65	60	55	51
	10	87	87	87	87	87	87	87	79	72	65	60	55	51
	20	69	69	69	69	69	69	69	69	69	65	60	55	51
	30	68	68	68	68	68	68	68	68	68	65	60	55	51
	40	60	60	60	60	60	60	60	60	60	60	60	55	51
	50	54	54	54	54	54	54	54	54	54	54	54	54	51
	60	50	50	50	50	50	50	50	50	50	50	50	50	50
	70	46	46	46	46	46	46	46	46	46	46	46	46	46
	80	44	44	44	44	44	44	44	44	44	44	44	44	44
	90	41	41	41	41	41	41	41	41	41	41	41	41	41
Zone 2	0	101	97	92	87	81	76	72	65	59	54	49	46	42
	10	87	87	87	87	81	76	72	65	59	54	49	46	42
	20	69	69	69	69	69	69	69	65	59	54	49	46	42
	30	68	68	68	68	68	68	68	65	59	54	49	46	42
	40	60	60	60	60	60	60	60	60	59	54	49	46	42
	50	54	54	54	54	54	54	54	54	54	54	49	46	42
	60	50	50	50	50	50	50	50	50	50	50	49	46	42
	70	46	46	46	46	46	46	46	46	46	46	46	46	42
	80	44	44	44	44	44	44	44	44	44	44	44	44	42
	90	41	41	41	41	41	41	41	41	41	41	41	41	41
Zone 3	0	87	81	75	70	66	62	58	52	48	43	40	38	36
	10	87	81	75	70	66	62	58	52	48	43	40	38	36
	20	69	69	69	69	66	62	58	52	48	43	40	38	36
	30	68	68	68	68	66	62	58	52	48	43	40	38	36
	40	60	60	60	60	60	60	58	52	48	43	40	38	36
	50	54	54	54	54	54	54	54	52	48	43	40	38	36
	60	50	50	50	50	50	50	50	50	48	43	40	38	36
	70	46	46	46	46	46	46	46	46	46	43	40	38	36
	80	44	44	44	44	44	44	44	44	44	43	40	38	36
	90	41	41	41	41	41	41	41	41	41	41	40	38	36

Notes:

1. Tables are based on critical rail span for load combinations as specified in chapter 2 of the ASCE 7-16 and allowable design loads per the 2015 Aluminum Design Manual.
2. Panels are assumed to be in portrait orientation with a maximum length of 67.5"

Structural ENGINUITY INC
Ingenuity in Engineering

SUNMODO®

Max Rail Spans for SunModo SMR100 System

Table 26b

Mean Roof Height: 15 < h ≤ 30 ft
Roof Angle: 0 < θ ≤ 7 degrees
Exposure Category: C

Panel Orientation: Portrait
North/South Support γ_E = 1.5
Roof Type : Gable

Roof Wind Zone	Ground Snow Load (psf)	Wind Speed (mph)												
		90	95	100	105	110	115	120	130	140	150	160	170	180
Zone 1'	0	101	101	101	101	101	99	96	88	80	73	68	63	58
	10	87	87	87	87	87	87	87	87	80	73	68	63	58
	20	69	69	69	69	69	69	69	69	69	69	68	63	58
	30	68	68	68	68	68	68	68	68	68	68	68	63	58
	40	60	60	60	60	60	60	60	60	60	60	60	60	58
	50	54	54	54	54	54	54	54	54	54	54	54	54	54
	60	50	50	50	50	50	50	50	50	50	50	50	50	50
	70	46	46	46	46	46	46	46	46	46	46	46	46	46
	80	44	44	44	44	44	44	44	44	44	44	44	44	44
	90	41	41	41	41	41	41	41	41	41	41	41	41	41
Zone 1	0	97	92	86	81	76	71	67	60	55	50	46	43	40
	10	87	87	86	81	76	71	67	60	55	50	46	43	40
	20	69	69	69	69	69	69	67	60	55	50	46	43	40
	30	68	68	68	68	68	68	67	60	55	50	46	43	40
	40	60	60	60	60	60	60	60	60	55	50	46	43	40
	50	54	54	54	54	54	54	54	54	54	50	46	43	40
	60	50	50	50	50	50	50	50	50	50	50	46	43	40
	70	46	46	46	46	46	46	46	46	46	46	46	43	40
	80	44	44	44	44	44	44	44	44	44	44	44	43	40
	90	41	41	41	41	41	41	41	41	41	41	41	41	40
Zone 2	0	81	75	70	65	62	58	55	50	45	42	39	36	34
	10	81	75	70	65	62	58	55	50	45	42	39	36	34
	20	69	69	69	65	62	58	55	50	45	42	39	36	34
	30	68	68	68	65	62	58	55	50	45	42	39	36	34
	40	60	60	60	60	60	58	55	50	45	42	39	36	34
	50	54	54	54	54	54	54	54	50	45	42	39	36	34
	60	50	50	50	50	50	50	50	50	45	42	39	36	34
	70	46	46	46	46	46	46	46	46	45	42	39	36	34
	80	44	44	44	44	44	44	44	44	44	42	39	36	34
	90	41	41	41	41	41	41	41	41	41	41	39	36	34
Zone 3	0	65	61	57	53	50	47	45	41	38	35	33	31	29
	10	65	61	57	53	50	47	45	41	38	35	33	31	29
	20	65	61	57	53	50	47	45	41	38	35	33	31	29
	30	65	61	57	53	50	47	45	41	38	35	33	31	29
	40	60	60	57	53	50	47	45	41	38	35	33	31	29
	50	54	54	54	53	50	47	45	41	38	35	33	31	29
	60	50	50	50	50	50	47	45	41	38	35	33	31	29
	70	46	46	46	46	46	46	45	41	38	35	33	31	29
	80	44	44	44	44	44	44	44	41	38	35	33	31	29
	90	41	41	41	41	41	41	41	41	38	35	33	31	29

Notes:

1. Tables are based on critical rail span for load combinations as specified in chapter 2 of the ASCE 7-16 and allowable design loads per the 2015 Aluminum Design Manual.
2. Panels are assumed to be in portrait orientation with a maximum length of 67.5"

Structural ENGINUITY INC
Ingenuity in Engineering

SUNMODO®

Max Rail Spans for SunModo SMR100 System

Table 27a

Mean Roof Height: 15 < h ≤ 30 ft
Roof Angle: 0 < θ ≤ 7 degrees
Exposure Category: D

Panel Orientation: Portrait
North/South Support γ_E = 1
Roof Type : Gable

Roof Wind Zone	Ground Snow Load (psf)	Wind Speed (mph)												
		90	95	100	105	110	115	120	130	140	150	160	170	180
Zone 1'	0	101	101	101	101	101	101	101	99	93	86	79	73	68
	10	87	87	87	87	87	87	87	87	87	86	79	73	68
	20	69	69	69	69	69	69	69	69	69	69	69	68	67
	30	68	68	68	68	68	68	68	68	68	68	68	67	66
	40	60	60	60	60	60	60	60	60	60	60	60	60	60
	50	54	54	54	54	54	54	54	54	54	54	54	54	54
	60	50	50	50	50	50	50	50	50	50	50	50	50	50
	70	46	46	46	46	46	46	46	46	46	46	46	46	46
	80	44	44	44	44	44	44	44	44	44	44	44	44	44
	90	41	41	41	41	41	41	41	41	41	41	41	41	41
Zone 1	0	101	101	98	94	89	84	79	71	64	58	54	50	46
	10	87	87	87	87	87	84	79	71	64	58	54	50	46
	20	69	69	69	69	69	69	69	69	64	58	54	50	46
	30	68	68	68	68	68	68	68	68	64	58	54	50	46
	40	60	60	60	60	60	60	60	60	60	58	54	50	46
	50	54	54	54	54	54	54	54	54	54	54	54	50	46
	60	50	50	50	50	50	50	50	50	50	50	50	50	46
	70	46	46	46	46	46	46	46	46	46	46	46	46	46
	80	44	44	44	44	44	44	44	44	44	44	44	44	44
	90	41	41	41	41	41	41	41	41	41	41	41	41	41
Zone 2	0	94	89	82	77	72	68	64	58	52	48	44	41	39
	10	87	87	82	77	72	68	64	58	52	48	44	41	39
	20	69	69	69	69	69	68	64	58	52	48	44	41	39
	30	68	68	68	68	68	68	64	58	52	48	44	41	39
	40	60	60	60	60	60	60	60	58	52	48	44	41	39
	50	54	54	54	54	54	54	54	54	52	48	44	41	39
	60	50	50	50	50	50	50	50	50	50	48	44	41	39
	70	46	46	46	46	46	46	46	46	46	46	44	41	39
	80	44	44	44	44	44	44	44	44	44	44	44	41	39
	90	41	41	41	41	41	41	41	41	41	41	41	41	39
Zone 3	0	77	71	67	62	58	55	52	47	43	40	37	35	33
	10	77	71	67	62	58	55	52	47	43	40	37	35	33
	20	69	69	67	62	58	55	52	47	43	40	37	35	33
	30	68	68	67	62	58	55	52	47	43	40	37	35	33
	40	60	60	60	60	58	55	52	47	43	40	37	35	33
	50	54	54	54	54	54	54	52	47	43	40	37	35	33
	60	50	50	50	50	50	50	50	47	43	40	37	35	33
	70	46	46	46	46	46	46	46	46	43	40	37	35	33
	80	44	44	44	44	44	44	44	44	43	40	37	35	33
	90	41	41	41	41	41	41	41	41	41	40	37	35	33

Notes:

1. Tables are based on critical rail span for load combinations as specified in chapter 2 of the ASCE 7-16 and allowable design loads per the 2015 Aluminum Design Manual.
2. Panels are assumed to be in portrait orientation with a maximum length of 67.5"

Structural ENGINUITY INC
Ingenuity in Engineering

SUNMODO®

Max Rail Spans for SunModo SMR100 System

Table 27b

Mean Roof Height: 15 < h ≤ 30 ft
Roof Angle: 0 < θ ≤ 7 degrees
Exposure Category: D

Panel Orientation: Portrait
North/South Support γ_E = 1.5
Roof Type : Gable

Roof Wind Zone	Ground Snow Load (psf)	Wind Speed (mph)												
		90	95	100	105	110	115	120	130	140	150	160	170	180
Zone 1'	0	101	101	101	100	96	92	88	79	72	66	61	57	53
	10	87	87	87	87	87	87	87	79	72	66	61	57	53
	20	69	69	69	69	69	69	69	69	69	66	61	57	53
	30	68	68	68	68	68	68	68	68	68	66	61	57	53
	40	60	60	60	60	60	60	60	60	60	60	60	57	53
	50	54	54	54	54	54	54	54	54	54	54	54	54	53
	60	50	50	50	50	50	50	50	50	50	50	50	50	50
	70	46	46	46	46	46	46	46	46	46	46	46	46	46
	80	44	44	44	44	44	44	44	44	44	44	44	44	44
	90	41	41	41	41	41	41	41	41	41	41	41	41	41
Zone 1	0	89	82	77	72	67	63	60	54	49	45	42	39	37
	10	87	82	77	72	67	63	60	54	49	45	42	39	37
	20	69	69	69	69	67	63	60	54	49	45	42	39	37
	30	68	68	68	68	67	63	60	54	49	45	42	39	37
	40	60	60	60	60	60	60	60	54	49	45	42	39	37
	50	54	54	54	54	54	54	54	54	49	45	42	39	37
	60	50	50	50	50	50	50	50	50	49	45	42	39	37
	70	46	46	46	46	46	46	46	46	46	45	42	39	37
	80	44	44	44	44	44	44	44	44	44	44	42	39	37
	90	41	41	41	41	41	41	41	41	41	41	41	39	37
Zone 2	0	72	67	62	59	55	52	49	45	41	38	36	33	32
	10	72	67	62	59	55	52	49	45	41	38	36	33	32
	20	69	67	62	59	55	52	49	45	41	38	36	33	32
	30	68	67	62	59	55	52	49	45	41	38	36	33	32
	40	60	60	60	59	55	52	49	45	41	38	36	33	32
	50	54	54	54	54	54	52	49	45	41	38	36	33	32
	60	50	50	50	50	50	50	49	45	41	38	36	33	32
	70	46	46	46	46	46	46	46	45	41	38	36	33	32
	80	44	44	44	44	44	44	44	44	41	38	36	33	32
	90	41	41	41	41	41	41	41	41	41	38	36	33	32
Zone 3	0	58	54	51	48	45	42	40	37	34	32	30	28	27
	10	58	54	51	48	45	42	40	37	34	32	30	28	27
	20	58	54	51	48	45	42	40	37	34	32	30	28	27
	30	58	54	51	48	45	42	40	37	34	32	30	28	27
	40	58	54	51	48	45	42	40	37	34	32	30	28	27
	50	54	54	51	48	45	42	40	37	34	32	30	28	27
	60	50	50	50	48	45	42	40	37	34	32	30	28	27
	70	46	46	46	46	45	42	40	37	34	32	30	28	27
	80	44	44	44	44	44	42	40	37	34	32	30	28	27
	90	41	41	41	41	41	41	40	37	34	32	30	28	27

Notes:

1. Tables are based on critical rail span for load combinations as specified in chapter 2 of the ASCE 7-16 and allowable design loads per the 2015 Aluminum Design Manual.
2. Panels are assumed to be in portrait orientation with a maximum length of 67.5"

Structural ENGINUITY INC
Ingenuity in Engineering

SUNMODO®

Max Rail Spans for SunModo SMR100 System

Table 28a

Mean Roof Height: 15 < h ≤ 30 ft
Roof Angle: 7 < θ ≤ 20 degrees
Exposure Category: B

Panel Orientation: Portrait
North/South Support γ_E = 1
Roof Type : Gable

Roof Wind Zone	Ground Snow Load (psf)	Wind Speed (mph)												
		90	95	100	105	110	115	120	130	140	150	160	170	180
Zones 1 & 2e	0	101	101	101	101	101	100	95	87	78	71	66	61	57
	10	80	80	80	80	80	80	80	80	78	71	66	61	57
	20	62	62	62	62	62	62	62	62	62	62	62	61	57
	30	62	62	62	62	62	62	62	62	62	62	62	61	57
	40	55	55	55	55	55	55	55	55	55	55	55	55	55
	50	50	50	50	50	50	50	50	50	50	50	50	50	50
	60	46	46	46	46	46	46	46	46	46	46	46	46	46
	70	43	43	43	43	43	43	43	43	43	43	43	43	43
	80	40	40	40	40	40	40	40	40	40	40	40	40	40
	90	38	38	38	38	38	38	38	38	38	38	38	38	38
Zones 2n, 2r, & 3e	0	101	101	99	95	91	86	80	71	64	58	53	48	45
	10	80	80	80	80	80	80	80	71	64	58	53	48	45
	20	62	62	62	62	62	62	62	62	62	58	53	48	45
	30	62	62	62	62	62	62	62	62	62	58	53	48	45
	40	55	55	55	55	55	55	55	55	55	55	53	48	45
	50	50	50	50	50	50	50	50	50	50	50	50	48	45
	60	46	46	46	46	46	46	46	46	46	46	46	46	45
	70	43	43	43	43	43	43	43	43	43	43	43	43	43
	80	40	40	40	40	40	40	40	40	40	40	40	40	40
	90	38	38	38	38	38	38	38	38	38	38	38	38	38
Zone 3r	0	101	96	91	87	80	75	70	62	56	51	46	43	40
	10	80	80	80	80	80	75	70	62	56	51	46	43	40
	20	62	62	62	62	62	62	62	62	56	51	46	43	40
	30	62	62	62	62	62	62	62	62	56	51	46	43	40
	40	55	55	55	55	55	55	55	55	55	51	46	43	40
	50	50	50	50	50	50	50	50	50	50	50	46	43	40
	60	46	46	46	46	46	46	46	46	46	46	46	43	40
	70	43	43	43	43	43	43	43	43	43	43	43	43	40
	80	40	40	40	40	40	40	40	40	40	40	40	40	40
	90	38	38	38	38	38	38	38	38	38	38	38	38	38

Notes:

1. Tables are based on critical rail span for load combinations as specified in chapter 2 of the ASCE 7-16 and allowable design loads per the 2015 Aluminum Design Manual.
2. Panels are assumed to be in portrait orientation with a maximum length of 67.5"

Structural ENGINUITY INC
Ingenuity in Engineering

SUNMODO®

Max Rail Spans for SunModo SMR100 System

Table 28b

Mean Roof Height: 15 < h ≤ 30 ft
Roof Angle: 7 < θ ≤ 20 degrees
Exposure Category: B

Panel Orientation: Portrait
North/South Support γ_E = 1.5
Roof Type : Gable

Roof Wind Zone	Ground Snow Load (psf)	Wind Speed (mph)												
		90	95	100	105	110	115	120	130	140	150	160	170	180
Zones 1 & 2e	0	101	99	93	89	82	77	73	66	60	55	51	48	44
	10	80	80	80	80	80	77	73	66	60	55	51	48	44
	20	62	62	62	62	62	62	62	62	60	55	51	48	44
	30	62	62	62	62	62	62	62	62	60	55	51	48	44
	40	55	55	55	55	55	55	55	55	55	55	51	48	44
	50	50	50	50	50	50	50	50	50	50	50	50	48	44
	60	46	46	46	46	46	46	46	46	46	46	46	46	44
	70	43	43	43	43	43	43	43	43	43	43	43	43	43
	80	40	40	40	40	40	40	40	40	40	40	40	40	40
	90	38	38	38	38	38	38	38	38	38	38	38	38	38
Zones 2n, 2r, & 3e	0	91	85	78	72	67	63	59	53	48	44	40	38	36
	10	80	80	78	72	67	63	59	53	48	44	40	38	36
	20	62	62	62	62	62	62	59	53	48	44	40	38	36
	30	62	62	62	62	62	62	59	53	48	44	40	38	36
	40	55	55	55	55	55	55	55	53	48	44	40	38	36
	50	50	50	50	50	50	50	50	50	48	44	40	38	36
	60	46	46	46	46	46	46	46	46	46	44	40	38	36
	70	43	43	43	43	43	43	43	43	43	43	40	38	36
	80	40	40	40	40	40	40	40	40	40	40	40	38	36
	90	38	38	38	38	38	38	38	38	38	38	38	38	36
Zone 3r	0	80	74	68	63	59	56	52	47	42	39	37	34	32
	10	80	74	68	63	59	56	52	47	42	39	37	34	32
	20	62	62	62	62	59	56	52	47	42	39	37	34	32
	30	62	62	62	62	59	56	52	47	42	39	37	34	32
	40	55	55	55	55	55	55	52	47	42	39	37	34	32
	50	50	50	50	50	50	50	50	47	42	39	37	34	32
	60	46	46	46	46	46	46	46	46	42	39	37	34	32
	70	43	43	43	43	43	43	43	43	42	39	37	34	32
	80	40	40	40	40	40	40	40	40	40	39	37	34	32
	90	38	38	38	38	38	38	38	38	38	38	37	34	32

Notes:

1. Tables are based on critical rail span for load combinations as specified in chapter 2 of the ASCE 7-16 and allowable design loads per the 2015 Aluminum Design Manual.
2. Panels are assumed to be in portrait orientation with a maximum length of 67.5"

Structural ENGINUITY INC
Ingenuity in Engineering

SUNMODO®

Max Rail Spans for SunModo SMR100 System

Table 29a

Mean Roof Height: 15 < h ≤ 30 ft
Roof Angle: 7 < θ ≤ 20 degrees
Exposure Category: C

Panel Orientation: Portrait
North/South Support γ_E = 1
Roof Type : Gable

Roof Wind Zone	Ground Snow Load (psf)	Wind Speed (mph)												
		90	95	100	105	110	115	120	130	140	150	160	170	180
Zones 1 & 2e	0	101	101	97	92	87	81	77	69	63	58	53	50	46
	10	80	80	80	80	80	80	77	69	63	58	53	50	46
	20	62	62	62	62	62	62	62	62	62	58	53	50	46
	30	62	62	62	62	62	62	62	62	62	58	53	50	46
	40	55	55	55	55	55	55	55	55	55	55	53	50	46
	50	50	50	50	50	50	50	50	50	50	50	50	50	46
	60	46	46	46	46	46	46	46	46	46	46	46	46	46
	70	43	43	43	43	43	43	43	43	43	43	43	43	43
	80	40	40	40	40	40	40	40	40	40	40	40	40	40
	90	38	38	38	38	38	38	38	38	38	38	38	38	38
Zones 2n, 2r, & 3e	0	94	89	82	76	71	66	62	56	50	46	42	39	37
	10	80	80	80	76	71	66	62	56	50	46	42	39	37
	20	62	62	62	62	62	62	62	56	50	46	42	39	37
	30	62	62	62	62	62	62	62	56	50	46	42	39	37
	40	55	55	55	55	55	55	55	55	50	46	42	39	37
	50	50	50	50	50	50	50	50	50	50	46	42	39	37
	60	46	46	46	46	46	46	46	46	46	46	42	39	37
	70	43	43	43	43	43	43	43	43	43	43	42	39	37
	80	40	40	40	40	40	40	40	40	40	40	40	39	37
	90	38	38	38	38	38	38	38	38	38	38	38	38	37
Zone 3r	0	85	78	72	67	62	58	55	49	44	41	38	36	34
	10	80	78	72	67	62	58	55	49	44	41	38	36	34
	20	62	62	62	62	62	58	55	49	44	41	38	36	34
	30	62	62	62	62	62	58	55	49	44	41	38	36	34
	40	55	55	55	55	55	55	55	49	44	41	38	36	34
	50	50	50	50	50	50	50	50	49	44	41	38	36	34
	60	46	46	46	46	46	46	46	46	44	41	38	36	34
	70	43	43	43	43	43	43	43	43	43	41	38	36	34
	80	40	40	40	40	40	40	40	40	40	40	38	36	34
	90	38	38	38	38	38	38	38	38	38	38	38	36	34

Notes:

1. Tables are based on critical rail span for load combinations as specified in chapter 2 of the ASCE 7-16 and allowable design loads per the 2015 Aluminum Design Manual.
2. Panels are assumed to be in portrait orientation with a maximum length of 67.5"

Structural ENGINUITY INC
Ingenuity in Engineering

SUNMODO®

Max Rail Spans for SunModo SMR100 System

Table 29b

Mean Roof Height: 15 < h ≤ 30 ft
Roof Angle: 7 < θ ≤ 20 degrees
Exposure Category: C

Panel Orientation: Portrait
North/South Support γ_E = 1.5
Roof Type : Gable

Roof Wind Zone	Ground Snow Load (psf)	Wind Speed (mph)												
		90	95	100	105	110	115	120	130	140	150	160	170	180
Zones 1 & 2e	0	86	80	75	70	66	62	59	54	49	45	42	39	37
	10	80	80	75	70	66	62	59	54	49	45	42	39	37
	20	62	62	62	62	62	62	59	54	49	45	42	39	37
	30	62	62	62	62	62	62	59	54	49	45	42	39	37
	40	55	55	55	55	55	55	55	54	49	45	42	39	37
	50	50	50	50	50	50	50	50	50	49	45	42	39	37
	60	46	46	46	46	46	46	46	46	46	45	42	39	37
	70	43	43	43	43	43	43	43	43	43	43	42	39	37
	80	40	40	40	40	40	40	40	40	40	40	40	39	37
	90	38	38	38	38	38	38	38	38	38	38	38	38	37
Zones 2n, 2r, & 3e	0	71	65	61	57	53	50	47	42	39	36	34	32	30
	10	71	65	61	57	53	50	47	42	39	36	34	32	30
	20	62	62	61	57	53	50	47	42	39	36	34	32	30
	30	62	62	61	57	53	50	47	42	39	36	34	32	30
	40	55	55	55	55	53	50	47	42	39	36	34	32	30
	50	50	50	50	50	50	50	47	42	39	36	34	32	30
	60	46	46	46	46	46	46	46	42	39	36	34	32	30
	70	43	43	43	43	43	43	43	42	39	36	34	32	30
	80	40	40	40	40	40	40	40	40	39	36	34	32	30
	90	38	38	38	38	38	38	38	38	38	36	34	32	30
Zone 3r	0	62	57	53	50	47	44	42	38	35	33	31	29	27
	10	62	57	53	50	47	44	42	38	35	33	31	29	27
	20	62	57	53	50	47	44	42	38	35	33	31	29	27
	30	62	57	53	50	47	44	42	38	35	33	31	29	27
	40	55	55	53	50	47	44	42	38	35	33	31	29	27
	50	50	50	50	50	47	44	42	38	35	33	31	29	27
	60	46	46	46	46	46	44	42	38	35	33	31	29	27
	70	43	43	43	43	43	43	42	38	35	33	31	29	27
	80	40	40	40	40	40	40	40	38	35	33	31	29	27
	90	38	38	38	38	38	38	38	38	35	33	31	29	27

Notes:

1. Tables are based on critical rail span for load combinations as specified in chapter 2 of the ASCE 7-16 and allowable design loads per the 2015 Aluminum Design Manual.
2. Panels are assumed to be in portrait orientation with a maximum length of 67.5"

Structural ENGINUITY INC
Ingenuity in Engineering

SUNMODO®

Max Rail Spans for SunModo SMR100 System

Table 30a

Mean Roof Height: 15 < h ≤ 30 ft
Roof Angle: 7 < θ ≤ 20 degrees
Exposure Category: D

Panel Orientation: Portrait
North/South Support γ_E = 1
Roof Type : Gable

Roof Wind Zone	Ground Snow Load (psf)	Wind Speed (mph)												
		90	95	100	105	110	115	120	130	140	150	160	170	180
Zones 1 & 2e	0	99	93	88	82	77	73	69	62	57	52	48	45	42
	10	80	80	80	80	77	73	69	62	57	52	48	45	42
	20	62	62	62	62	62	62	62	62	57	52	48	45	42
	30	62	62	62	62	62	62	62	62	57	52	48	45	42
	40	55	55	55	55	55	55	55	55	55	52	48	45	42
	50	50	50	50	50	50	50	50	50	50	50	48	45	42
	60	46	46	46	46	46	46	46	46	46	46	46	45	42
	70	43	43	43	43	43	43	43	43	43	43	43	43	42
	80	40	40	40	40	40	40	40	40	40	40	40	40	40
	90	38	38	38	38	38	38	38	38	38	38	38	38	38
Zones 2n, 2r, & 3e	0	85	78	72	67	63	59	55	49	45	41	38	36	34
	10	80	78	72	67	63	59	55	49	45	41	38	36	34
	20	62	62	62	62	62	59	55	49	45	41	38	36	34
	30	62	62	62	62	62	59	55	49	45	41	38	36	34
	40	55	55	55	55	55	55	55	49	45	41	38	36	34
	50	50	50	50	50	50	50	50	49	45	41	38	36	34
	60	46	46	46	46	46	46	46	46	45	41	38	36	34
	70	43	43	43	43	43	43	43	43	43	41	38	36	34
	80	40	40	40	40	40	40	40	40	40	40	38	36	34
	90	38	38	38	38	38	38	38	38	38	38	38	36	34
Zone 3r	0	74	68	63	59	55	52	49	44	40	37	35	33	31
	10	74	68	63	59	55	52	49	44	40	37	35	33	31
	20	62	62	62	59	55	52	49	44	40	37	35	33	31
	30	62	62	62	59	55	52	49	44	40	37	35	33	31
	40	55	55	55	55	55	52	49	44	40	37	35	33	31
	50	50	50	50	50	50	50	49	44	40	37	35	33	31
	60	46	46	46	46	46	46	46	44	40	37	35	33	31
	70	43	43	43	43	43	43	43	43	40	37	35	33	31
	80	40	40	40	40	40	40	40	40	40	37	35	33	31
	90	38	38	38	38	38	38	38	38	38	37	35	33	31

Notes:

1. Tables are based on critical rail span for load combinations as specified in chapter 2 of the ASCE 7-16 and allowable design loads per the 2015 Aluminum Design Manual.
2. Panels are assumed to be in portrait orientation with a maximum length of 67.5"

Structural ENGINUITY INC
Ingenuity in Engineering

SUNMODO®

Max Rail Spans for SunModo SMR100 System

Table 30b

Mean Roof Height: 15 < h ≤ 30 ft
Roof Angle: 7 < θ ≤ 20 degrees
Exposure Category: D

Panel Orientation: Portrait
North/South Support γ_E = 1.5
Roof Type : Gable

Roof Wind Zone	Ground Snow Load (psf)	Wind Speed (mph)												
		90	95	100	105	110	115	120	130	140	150	160	170	180
Zones 1 & 2e	0	77	72	67	63	59	56	53	48	44	41	38	36	34
	10	77	72	67	63	59	56	53	48	44	41	38	36	34
	20	62	62	62	62	59	56	53	48	44	41	38	36	34
	30	62	62	62	62	59	56	53	48	44	41	38	36	34
	40	55	55	55	55	55	55	53	48	44	41	38	36	34
	50	50	50	50	50	50	50	50	48	44	41	38	36	34
	60	46	46	46	46	46	46	46	46	44	41	38	36	34
	70	43	43	43	43	43	43	43	43	43	41	38	36	34
	80	40	40	40	40	40	40	40	40	40	40	38	36	34
	90	38	38	38	38	38	38	38	38	38	38	38	36	34
Zones 2n, 2r, & 3e	0	62	58	54	50	47	44	42	39	36	33	31	29	27
	10	62	58	54	50	47	44	42	39	36	33	31	29	27
	20	62	58	54	50	47	44	42	39	36	33	31	29	27
	30	62	58	54	50	47	44	42	39	36	33	31	29	27
	40	55	55	54	50	47	44	42	39	36	33	31	29	27
	50	50	50	50	50	47	44	42	39	36	33	31	29	27
	60	46	46	46	46	46	44	42	39	36	33	31	29	27
	70	43	43	43	43	43	43	42	39	36	33	31	29	27
	80	40	40	40	40	40	40	40	39	36	33	31	29	27
	90	38	38	38	38	38	38	38	38	36	33	31	29	27
Zone 3r	0	55	51	47	44	42	40	38	35	32	30	28	27	25
	10	55	51	47	44	42	40	38	35	32	30	28	27	25
	20	55	51	47	44	42	40	38	35	32	30	28	27	25
	30	55	51	47	44	42	40	38	35	32	30	28	27	25
	40	55	51	47	44	42	40	38	35	32	30	28	27	25
	50	50	50	47	44	42	40	38	35	32	30	28	27	25
	60	46	46	46	44	42	40	38	35	32	30	28	27	25
	70	43	43	43	43	42	40	38	35	32	30	28	27	25
	80	40	40	40	40	40	40	38	35	32	30	28	27	25
	90	38	38	38	38	38	38	38	35	32	30	28	27	25

Notes:

1. Tables are based on critical rail span for load combinations as specified in chapter 2 of the ASCE 7-16 and allowable design loads per the 2015 Aluminum Design Manual.
2. Panels are assumed to be in portrait orientation with a maximum length of 67.5"

Structural ENGINUITY INC
Ingenuity in Engineering

SUNMODO®

Max Rail Spans for SunModo SMR100 System

Table 31a

Mean Roof Height: 15 < h ≤ 30 ft
Roof Angle: 20 < θ ≤ 27 degrees
Exposure Category: B

Panel Orientation: Portrait
North/South Support γ_E = 1
Roof Type : Gable

Roof Wind Zone	Ground Snow Load (psf)	Wind Speed (mph)												
		90	95	100	105	110	115	120	130	140	150	160	170	180
Zones 1 & 2e	0	101	101	101	101	101	101	101	99	93	87	81	74	69
	10	86	86	86	86	86	86	86	86	86	86	81	74	69
	20	73	73	73	73	73	73	73	73	73	72	71	70	69
	30	62	62	62	62	62	62	62	62	62	62	62	62	61
	40	55	55	55	55	55	55	55	55	55	55	55	55	55
	50	50	50	50	50	50	50	50	50	50	50	50	50	50
	60	46	46	46	46	46	46	46	46	46	46	46	46	46
	70	43	43	43	43	43	43	43	43	43	43	43	43	43
	80	40	40	40	40	40	40	40	40	40	40	40	40	40
	90	38	38	38	38	38	38	38	38	38	38	38	38	38
Zones 2n, 2r, & 3e	0	101	101	101	101	98	94	90	83	74	66	60	55	51
	10	86	86	86	86	86	86	86	83	74	66	60	55	51
	20	73	73	73	73	73	73	73	73	73	66	60	55	51
	30	62	62	62	62	62	62	62	62	62	62	60	55	51
	40	55	55	55	55	55	55	55	55	55	55	55	55	51
	50	50	50	50	50	50	50	50	50	50	50	50	50	50
	60	46	46	46	46	46	46	46	46	46	46	46	46	46
	70	43	43	43	43	43	43	43	43	43	43	43	43	43
	80	40	40	40	40	40	40	40	40	40	40	40	40	40
	90	38	38	38	38	38	38	38	38	38	38	38	38	38
Zone 3r	0	101	101	101	97	93	89	85	75	66	60	54	50	46
	10	86	86	86	86	86	86	85	75	66	60	54	50	46
	20	73	73	73	73	73	73	73	73	66	60	54	50	46
	30	62	62	62	62	62	62	62	62	62	60	54	50	46
	40	55	55	55	55	55	55	55	55	55	55	54	50	46
	50	50	50	50	50	50	50	50	50	50	50	50	50	46
	60	46	46	46	46	46	46	46	46	46	46	46	46	46
	70	43	43	43	43	43	43	43	43	43	43	43	43	43
	80	40	40	40	40	40	40	40	40	40	40	40	40	40
	90	38	38	38	38	38	38	38	38	38	38	38	38	38

Notes:

1. Tables are based on critical rail span for load combinations as specified in chapter 2 of the ASCE 7-16 and allowable design loads per the 2015 Aluminum Design Manual.
2. Panels are assumed to be in portrait orientation with a maximum length of 67.5"

Structural ENGINUITY INC
Ingenuity in Engineering

SUNMODO®

Max Rail Spans for SunModo SMR100 System

Table 31b	Mean Roof Height: 15 < h ≤ 30 ft Roof Angle: 20 < θ ≤ 27 degrees Exposure Category: B	Panel Orientation: Portrait North/South Support γ_E = 1.5 Roof Type : Gable

Roof Wind Zone	Ground Snow Load (psf)	Wind Speed (mph)												
		90	95	100	105	110	115	120	130	140	150	160	170	180
Zones 1 & 2e	0	101	101	101	100	96	92	89	81	73	67	62	57	53
	10	86	86	86	86	86	86	86	81	73	67	62	57	53
	20	73	73	73	73	73	73	73	73	73	67	62	57	53
	30	62	62	62	62	62	62	62	62	62	62	62	57	53
	40	55	55	55	55	55	55	55	55	55	55	55	55	53
	50	50	50	50	50	50	50	50	50	50	50	50	50	50
	60	46	46	46	46	46	46	46	46	46	46	46	46	46
	70	43	43	43	43	43	43	43	43	43	43	43	43	43
	80	40	40	40	40	40	40	40	40	40	40	40	40	40
	90	38	38	38	38	38	38	38	38	38	38	38	38	38
Zones 2n, 2r, & 3e	0	98	93	89	85	78	73	68	61	55	50	45	42	39
	10	86	86	86	85	78	73	68	61	55	50	45	42	39
	20	73	73	73	73	73	73	68	61	55	50	45	42	39
	30	62	62	62	62	62	62	62	61	55	50	45	42	39
	40	55	55	55	55	55	55	55	55	55	50	45	42	39
	50	50	50	50	50	50	50	50	50	50	50	45	42	39
	60	46	46	46	46	46	46	46	46	46	46	45	42	39
	70	43	43	43	43	43	43	43	43	43	43	43	42	39
	80	40	40	40	40	40	40	40	40	40	40	40	40	39
	90	38	38	38	38	38	38	38	38	38	38	38	38	38
Zone 3r	0	92	88	83	76	70	66	61	55	49	44	41	38	35
	10	86	86	83	76	70	66	61	55	49	44	41	38	35
	20	73	73	73	73	70	66	61	55	49	44	41	38	35
	30	62	62	62	62	62	62	61	55	49	44	41	38	35
	40	55	55	55	55	55	55	55	55	49	44	41	38	35
	50	50	50	50	50	50	50	50	50	49	44	41	38	35
	60	46	46	46	46	46	46	46	46	46	44	41	38	35
	70	43	43	43	43	43	43	43	43	43	43	41	38	35
	80	40	40	40	40	40	40	40	40	40	40	40	38	35
	90	38	38	38	38	38	38	38	38	38	38	38	38	35

Notes:

1. Tables are based on critical rail span for load combinations as specified in chapter 2 of the ASCE 7-16 and allowable design loads per the 2015 Aluminum Design Manual.
2. Panels are assumed to be in portrait orientation with a maximum length of 67.5"

Structural ENGINUITY INC
Ingenuity in Engineering

SUNMODO®

Max Rail Spans for SunModo SMR100 System

Table 32a

Mean Roof Height: 15 < h ≤ 30 ft
Roof Angle: 20 < θ ≤ 27 degrees
Exposure Category: C

Panel Orientation: Portrait
North/South Support γ_E = 1
Roof Type : Gable

Roof Wind Zone	Ground Snow Load (psf)	Wind Speed (mph)												
		90	95	100	105	110	115	120	130	140	150	160	170	180
Zones 1 & 2e	0	101	101	101	101	99	95	91	85	77	70	64	60	56
	10	86	86	86	86	86	86	86	85	77	70	64	60	56
	20	73	73	73	73	73	73	73	72	71	69	64	60	56
	30	62	62	62	62	62	62	62	62	62	62	61	60	56
	40	55	55	55	55	55	55	55	55	55	55	55	54	54
	50	50	50	50	50	50	50	50	50	50	50	50	50	50
	60	46	46	46	46	46	46	46	46	46	46	46	46	46
	70	43	43	43	43	43	43	43	43	43	43	43	43	43
	80	40	40	40	40	40	40	40	40	40	40	40	40	40
	90	38	38	38	38	38	38	38	38	38	38	38	38	38
Zones 2n, 2r, & 3e	0	101	96	91	87	83	77	72	64	57	52	48	44	41
	10	86	86	86	86	83	77	72	64	57	52	48	44	41
	20	73	73	73	73	73	73	72	64	57	52	48	44	41
	30	62	62	62	62	62	62	62	62	57	52	48	44	41
	40	55	55	55	55	55	55	55	55	55	52	48	44	41
	50	50	50	50	50	50	50	50	50	50	50	48	44	41
	60	46	46	46	46	46	46	46	46	46	46	46	44	41
	70	43	43	43	43	43	43	43	43	43	43	43	43	41
	80	40	40	40	40	40	40	40	40	40	40	40	40	40
	90	38	38	38	38	38	38	38	38	38	38	38	38	38
Zone 3r	0	96	91	86	81	75	69	65	57	51	47	43	40	37
	10	86	86	86	81	75	69	65	57	51	47	43	40	37
	20	73	73	73	73	73	69	65	57	51	47	43	40	37
	30	62	62	62	62	62	62	62	57	51	47	43	40	37
	40	55	55	55	55	55	55	55	55	51	47	43	40	37
	50	50	50	50	50	50	50	50	50	50	47	43	40	37
	60	46	46	46	46	46	46	46	46	46	46	43	40	37
	70	43	43	43	43	43	43	43	43	43	43	43	40	37
	80	40	40	40	40	40	40	40	40	40	40	40	40	37
	90	38	38	38	38	38	38	38	38	38	38	38	38	37

Notes:

1. Tables are based on critical rail span for load combinations as specified in chapter 2 of the ASCE 7-16 and allowable design loads per the 2015 Aluminum Design Manual.
2. Panels are assumed to be in portrait orientation with a maximum length of 67.5"

Structural ENGINUITY INC
Ingenuity in Engineering

SUNMODO®

Max Rail Spans for SunModo SMR100 System

Table 32b

Mean Roof Height: 15 < h ≤ 30 ft
Roof Angle: 20 < θ ≤ 27 degrees
Exposure Category: C

Panel Orientation: Portrait
North/South Support γ_E = 1.5
Roof Type : Gable

Roof Wind Zone	Ground Snow Load (psf)	Wind Speed (mph)												
		90	95	100	105	110	115	120	130	140	150	160	170	180
Zones 1 & 2e	0	99	94	90	86	81	76	72	65	59	54	50	46	43
	10	86	86	86	86	81	76	72	65	59	54	50	46	43
	20	73	73	73	73	73	73	72	65	59	54	50	46	43
	30	62	62	62	62	62	62	62	62	59	54	50	46	43
	40	55	55	55	55	55	55	55	55	55	54	50	46	43
	50	50	50	50	50	50	50	50	50	50	50	50	46	43
	60	46	46	46	46	46	46	46	46	46	46	46	46	43
	70	43	43	43	43	43	43	43	43	43	43	43	43	43
	80	40	40	40	40	40	40	40	40	40	40	40	40	40
	90	38	38	38	38	38	38	38	38	38	38	38	38	38
Zones 2n, 2r, & 3e	0	83	76	70	65	61	57	54	48	43	40	37	35	33
	10	83	76	70	65	61	57	54	48	43	40	37	35	33
	20	73	73	70	65	61	57	54	48	43	40	37	35	33
	30	62	62	62	62	61	57	54	48	43	40	37	35	33
	40	55	55	55	55	55	55	54	48	43	40	37	35	33
	50	50	50	50	50	50	50	50	48	43	40	37	35	33
	60	46	46	46	46	46	46	46	46	43	40	37	35	33
	70	43	43	43	43	43	43	43	43	43	40	37	35	33
	80	40	40	40	40	40	40	40	40	40	40	37	35	33
	90	38	38	38	38	38	38	38	38	38	38	37	35	33
Zone 3r	0	74	68	63	58	54	51	48	43	39	36	33	31	29
	10	74	68	63	58	54	51	48	43	39	36	33	31	29
	20	73	68	63	58	54	51	48	43	39	36	33	31	29
	30	62	62	62	58	54	51	48	43	39	36	33	31	29
	40	55	55	55	55	54	51	48	43	39	36	33	31	29
	50	50	50	50	50	50	50	48	43	39	36	33	31	29
	60	46	46	46	46	46	46	46	43	39	36	33	31	29
	70	43	43	43	43	43	43	43	43	39	36	33	31	29
	80	40	40	40	40	40	40	40	40	39	36	33	31	29
	90	38	38	38	38	38	38	38	38	38	36	33	31	29

Notes:

1. Tables are based on critical rail span for load combinations as specified in chapter 2 of the ASCE 7-16 and allowable design loads per the 2015 Aluminum Design Manual.
2. Panels are assumed to be in portrait orientation with a maximum length of 67.5"

Structural ENGINUITY INC
Ingenuity in Engineering

SUNMODO®

Max Rail Spans for SunModo SMR100 System

Table 33a

Mean Roof Height: 15 < h ≤ 30 ft
Roof Angle: 20 < θ ≤ 27 degrees
Exposure Category: D

Panel Orientation: Portrait
North/South Support γ_E = 1
Roof Type : Gable

Roof Wind Zone	Ground Snow Load (psf)	Wind Speed (mph)												
		90	95	100	105	110	115	120	130	140	150	160	170	180
Zones 1 & 2e	0	101	101	100	96	92	88	85	76	69	63	58	54	50
	10	86	86	86	86	86	86	85	76	69	63	58	54	50
	20	73	73	73	73	73	73	72	70	69	63	58	54	50
	30	62	62	62	62	62	62	62	62	61	60	58	54	50
	40	55	55	55	55	55	55	55	55	55	55	54	53	50
	50	50	50	50	50	50	50	50	50	50	50	50	49	49
	60	46	46	46	46	46	46	46	46	46	46	46	46	46
	70	43	43	43	43	43	43	43	43	43	43	43	43	43
	80	40	40	40	40	40	40	40	40	40	40	40	40	40
	90	38	38	38	38	38	38	38	38	38	38	38	38	38
Zones 2n, 2r, & 3e	0	93	89	84	78	72	68	64	57	51	46	42	40	37
	10	86	86	84	78	72	68	64	57	51	46	42	40	37
	20	73	73	73	73	72	68	64	57	51	46	42	40	37
	30	62	62	62	62	62	62	62	57	51	46	42	40	37
	40	55	55	55	55	55	55	55	55	51	46	42	40	37
	50	50	50	50	50	50	50	50	50	50	46	42	40	37
	60	46	46	46	46	46	46	46	46	46	46	42	40	37
	70	43	43	43	43	43	43	43	43	43	43	42	40	37
	80	40	40	40	40	40	40	40	40	40	40	40	40	37
	90	38	38	38	38	38	38	38	38	38	38	38	38	37
Zone 3r	0	88	83	76	70	65	61	57	51	46	42	38	36	33
	10	86	83	76	70	65	61	57	51	46	42	38	36	33
	20	73	73	73	70	65	61	57	51	46	42	38	36	33
	30	62	62	62	62	62	61	57	51	46	42	38	36	33
	40	55	55	55	55	55	55	55	51	46	42	38	36	33
	50	50	50	50	50	50	50	50	50	46	42	38	36	33
	60	46	46	46	46	46	46	46	46	46	42	38	36	33
	70	43	43	43	43	43	43	43	43	43	42	38	36	33
	80	40	40	40	40	40	40	40	40	40	40	38	36	33
	90	38	38	38	38	38	38	38	38	38	38	38	36	33

Notes:

1. Tables are based on critical rail span for load combinations as specified in chapter 2 of the ASCE 7-16 and allowable design loads per the 2015 Aluminum Design Manual.
2. Panels are assumed to be in portrait orientation with a maximum length of 67.5"

Structural ENGINUITY INC
Ingenuity in Engineering

SUNMODO®

Max Rail Spans for SunModo SMR100 System

Table 33b	Mean Roof Height: 15 < h ≤ 30 ft Roof Angle: 20 < θ ≤ 27 degrees Exposure Category: D	Panel Orientation: Portrait North/South Support γ_E = 1.5 Roof Type : Gable

Roof Wind Zone	Ground Snow Load (psf)	Wind Speed (mph)												
		90	95	100	105	110	115	120	130	140	150	160	170	180
Zones 1 & 2e	0	91	87	82	77	72	68	65	58	53	49	45	42	40
	10	86	86	82	77	72	68	65	58	53	49	45	42	40
	20	73	73	73	73	72	68	65	58	53	49	45	42	40
	30	62	62	62	62	62	62	62	58	53	49	45	42	40
	40	55	55	55	55	55	55	55	55	53	49	45	42	40
	50	50	50	50	50	50	50	50	50	50	49	45	42	40
	60	46	46	46	46	46	46	46	46	46	46	45	42	40
	70	43	43	43	43	43	43	43	43	43	43	43	42	40
	80	40	40	40	40	40	40	40	40	40	40	40	40	40
	90	38	38	38	38	38	38	38	38	38	38	38	38	38
Zones 2n, 2r, & 3e	0	72	67	62	57	54	51	48	43	39	37	34	32	30
	10	72	67	62	57	54	51	48	43	39	37	34	32	30
	20	72	67	62	57	54	51	48	43	39	37	34	32	30
	30	62	62	62	57	54	51	48	43	39	37	34	32	30
	40	55	55	55	55	54	51	48	43	39	37	34	32	30
	50	50	50	50	50	50	50	48	43	39	37	34	32	30
	60	46	46	46	46	46	46	46	43	39	37	34	32	30
	70	43	43	43	43	43	43	43	43	39	37	34	32	30
	80	40	40	40	40	40	40	40	40	39	37	34	32	30
	90	38	38	38	38	38	38	38	38	38	37	34	32	30
Zone 3r	0	65	60	55	52	48	45	43	39	35	33	30	28	26
	10	65	60	55	52	48	45	43	39	35	33	30	28	26
	20	65	60	55	52	48	45	43	39	35	33	30	28	26
	30	62	60	55	52	48	45	43	39	35	33	30	28	26
	40	55	55	55	52	48	45	43	39	35	33	30	28	26
	50	50	50	50	50	48	45	43	39	35	33	30	28	26
	60	46	46	46	46	46	45	43	39	35	33	30	28	26
	70	43	43	43	43	43	43	43	39	35	33	30	28	26
	80	40	40	40	40	40	40	40	39	35	33	30	28	26
	90	38	38	38	38	38	38	38	38	35	33	30	28	26

Notes:

1. Tables are based on critical rail span for load combinations as specified in chapter 2 of the ASCE 7-16 and allowable design loads per the 2015 Aluminum Design Manual.
2. Panels are assumed to be in portrait orientation with a maximum length of 67.5"

Structural ENGINUITY INC
Ingenuity in Engineering

SUNMODO®

Max Rail Spans for SunModo SMR100 System

Table 34a

Mean Roof Height: 15 < h ≤ 30 ft
Roof Angle: 27 < θ ≤ 45 degrees
Exposure Category: B

Panel Orientation: Portrait
North/South Support γ_E = 1
Roof Type : Gable

Roof Wind Zone	Ground Snow Load (psf)	Wind Speed (mph)												
		90	95	100	105	110	115	120	130	140	150	160	170	180
Zones 1, 2e, & 2r	0	101	101	101	101	101	101	100	96	91	86	80	73	66
	10	86	86	86	86	86	86	85	83	81	78	76	73	66
	20	75	75	75	75	74	73	73	71	70	68	67	65	64
	30	64	64	64	64	64	64	64	64	62	61	60	59	58
	40	57	57	57	57	57	57	57	57	57	56	55	54	53
	50	52	52	52	52	52	52	52	52	52	52	51	51	50
	60	48	48	48	48	48	48	48	48	48	48	48	48	47
	70	45	45	45	45	45	45	45	45	45	45	45	45	44
	80	42	42	42	42	42	42	42	42	42	42	42	42	42
	90	40	40	40	40	40	40	40	40	40	40	40	40	40
Zones 2n & 3r	0	101	101	101	101	101	101	98	91	85	78	71	65	60
	10	86	86	86	86	86	86	85	83	81	78	71	65	60
	20	75	75	75	75	74	73	73	71	70	68	67	65	60
	30	64	64	64	64	64	64	64	64	62	61	60	59	58
	40	57	57	57	57	57	57	57	57	57	56	55	54	53
	50	52	52	52	52	52	52	52	52	52	52	51	51	50
	60	48	48	48	48	48	48	48	48	48	48	48	48	47
	70	45	45	45	45	45	45	45	45	45	45	45	45	44
	80	42	42	42	42	42	42	42	42	42	42	42	42	42
	90	40	40	40	40	40	40	40	40	40	40	40	40	40
Zone 3e	0	101	101	101	100	96	92	89	83	74	67	61	55	51
	10	86	86	86	86	86	86	85	83	74	67	61	55	51
	20	75	75	75	75	74	73	73	71	70	67	61	55	51
	30	64	64	64	64	64	64	64	64	62	61	60	55	51
	40	57	57	57	57	57	57	57	57	57	56	55	54	51
	50	52	52	52	52	52	52	52	52	52	52	51	51	50
	60	48	48	48	48	48	48	48	48	48	48	48	48	47
	70	45	45	45	45	45	45	45	45	45	45	45	45	44
	80	42	42	42	42	42	42	42	42	42	42	42	42	42
	90	40	40	40	40	40	40	40	40	40	40	40	40	40

Notes:

1. Tables are based on critical rail span for load combinations as specified in chapter 2 of the ASCE 7-16 and allowable design loads per the 2015 Aluminum Design Manual.
2. Panels are assumed to be in portrait orientation with a maximum length of 67.5"

Structural ENGINUITY INC
Ingenuity in Engineering

SUNMODO®

Max Rail Spans for SunModo SMR100 System

Table 34b	Mean Roof Height: 15 < h ≤ 30 ft Roof Angle: 27 < θ ≤ 45 degrees Exposure Category: B	Panel Orientation: Portrait North/South Support γ_E = 1.5 Roof Type : Gable

Roof Wind Zone	Ground Snow Load (psf)	Wind Speed (mph)												
		90	95	100	105	110	115	120	130	140	150	160	170	180
Zones 1, 2e, & 2r	0	101	101	101	100	95	91	88	81	72	64	58	53	49
	10	86	86	86	86	86	86	85	81	72	64	58	53	49
	20	75	75	75	75	74	73	73	71	70	64	58	53	49
	30	64	64	64	64	64	64	64	64	62	61	58	53	49
	40	57	57	57	57	57	57	57	57	57	56	55	53	49
	50	52	52	52	52	52	52	52	52	52	52	51	51	49
	60	48	48	48	48	48	48	48	48	48	48	48	48	47
	70	45	45	45	45	45	45	45	45	45	45	45	45	44
	80	42	42	42	42	42	42	42	42	42	42	42	42	42
	90	40	40	40	40	40	40	40	40	40	40	40	40	40
Zones 2n & 3r	0	101	101	96	92	88	85	81	72	64	58	53	49	45
	10	86	86	86	86	86	85	81	72	64	58	53	49	45
	20	75	75	75	75	74	73	73	71	64	58	53	49	45
	30	64	64	64	64	64	64	64	64	62	58	53	49	45
	40	57	57	57	57	57	57	57	57	57	56	53	49	45
	50	52	52	52	52	52	52	52	52	52	52	51	49	45
	60	48	48	48	48	48	48	48	48	48	48	48	48	45
	70	45	45	45	45	45	45	45	45	45	45	45	45	44
	80	42	42	42	42	42	42	42	42	42	42	42	42	42
	90	40	40	40	40	40	40	40	40	40	40	40	40	40
Zone 3e	0	96	91	87	84	79	73	69	61	55	50	46	42	39
	10	86	86	86	84	79	73	69	61	55	50	46	42	39
	20	75	75	75	75	74	73	69	61	55	50	46	42	39
	30	64	64	64	64	64	64	64	61	55	50	46	42	39
	40	57	57	57	57	57	57	57	57	55	50	46	42	39
	50	52	52	52	52	52	52	52	52	52	50	46	42	39
	60	48	48	48	48	48	48	48	48	48	48	46	42	39
	70	45	45	45	45	45	45	45	45	45	45	45	42	39
	80	42	42	42	42	42	42	42	42	42	42	42	42	39
	90	40	40	40	40	40	40	40	40	40	40	40	40	39

Notes:

1. Tables are based on critical rail span for load combinations as specified in chapter 2 of the ASCE 7-16 and allowable design loads per the 2015 Aluminum Design Manual.
2. Panels are assumed to be in portrait orientation with a maximum length of 67.5"

Structural ENGINUITY INC
Ingenuity in Engineering

SUNMODO®

Max Rail Spans for SunModo SMR100 System

Table 35a

Mean Roof Height: 15 < h ≤ 30 ft
Roof Angle: 27 < θ ≤ 45 degrees
Exposure Category: C

Panel Orientation: Portrait
North/South Support γ_E = 1
Roof Type : Gable

Roof Wind Zone	Ground Snow Load (psf)	Wind Speed (mph)												
		90	95	100	105	110	115	120	130	140	150	160	170	180
Zones 1, 2e, & 2r	0	101	101	101	98	96	93	91	84	76	68	61	56	51
	10	86	86	85	84	83	82	80	78	75	68	61	56	51
	20	75	74	73	72	71	70	70	68	66	64	61	56	51
	30	64	64	64	64	64	63	62	61	59	58	57	55	51
	40	57	57	57	57	57	57	57	56	55	54	52	51	50
	50	52	52	52	52	52	52	52	52	51	50	49	48	47
	60	48	48	48	48	48	48	48	48	48	47	46	45	45
	70	45	45	45	45	45	45	45	45	45	45	44	43	42
	80	42	42	42	42	42	42	42	42	42	42	42	41	41
	90	40	40	40	40	40	40	40	40	40	40	40	40	39
Zones 2n & 3r	0	101	101	99	95	91	87	84	75	67	61	56	51	47
	10	86	86	85	84	83	82	80	75	67	61	56	51	47
	20	75	74	73	72	71	70	70	68	66	61	56	51	47
	30	64	64	64	64	64	63	62	61	59	58	56	51	47
	40	57	57	57	57	57	57	57	56	55	54	52	51	47
	50	52	52	52	52	52	52	52	52	51	50	49	48	47
	60	48	48	48	48	48	48	48	48	48	47	46	45	45
	70	45	45	45	45	45	45	45	45	45	45	44	43	42
	80	42	42	42	42	42	42	42	42	42	42	42	41	41
	90	40	40	40	40	40	40	40	40	40	40	40	40	39
Zone 3e	0	99	94	90	86	83	77	72	64	58	52	48	44	41
	10	86	86	85	84	83	77	72	64	58	52	48	44	41
	20	75	74	73	72	71	70	70	64	58	52	48	44	41
	30	64	64	64	64	64	63	62	61	58	52	48	44	41
	40	57	57	57	57	57	57	57	56	55	52	48	44	41
	50	52	52	52	52	52	52	52	52	51	50	48	44	41
	60	48	48	48	48	48	48	48	48	48	47	46	44	41
	70	45	45	45	45	45	45	45	45	45	45	44	43	41
	80	42	42	42	42	42	42	42	42	42	42	42	41	41
	90	40	40	40	40	40	40	40	40	40	40	40	40	39

Notes:

1. Tables are based on critical rail span for load combinations as specified in chapter 2 of the ASCE 7-16 and allowable design loads per the 2015 Aluminum Design Manual.
2. Panels are assumed to be in portrait orientation with a maximum length of 67.5"

Structural ENGINUITY INC
Ingenuity in Engineering

SUNMODO®

Max Rail Spans for SunModo SMR100 System

Table 35b	Mean Roof Height: 15 < h ≤ 30 ft Roof Angle: 27 < θ ≤ 45 degrees Exposure Category: C	Panel Orientation: Portrait North/South Support γ_E = 1.5 Roof Type : Gable

Roof Wind Zone	Ground Snow Load (psf)	Wind Speed (mph)												
		90	95	100	105	110	115	120	130	140	150	160	170	180
Zones 1, 2e, & 2r	0	98	93	89	85	81	75	70	62	55	50	45	42	39
	10	86	86	85	84	81	75	70	62	55	50	45	42	39
	20	75	74	73	72	71	70	70	62	55	50	45	42	39
	30	64	64	64	64	64	63	62	61	55	50	45	42	39
	40	57	57	57	57	57	57	57	56	55	50	45	42	39
	50	52	52	52	52	52	52	52	52	51	50	45	42	39
	60	48	48	48	48	48	48	48	48	48	47	45	42	39
	70	45	45	45	45	45	45	45	45	45	45	44	42	39
	80	42	42	42	42	42	42	42	42	42	42	42	41	39
	90	40	40	40	40	40	40	40	40	40	40	40	40	39
Zones 2n & 3r	0	91	86	83	77	71	67	63	56	50	46	42	40	37
	10	86	86	83	77	71	67	63	56	50	46	42	40	37
	20	75	74	73	72	71	67	63	56	50	46	42	40	37
	30	64	64	64	64	64	63	62	56	50	46	42	40	37
	40	57	57	57	57	57	57	57	56	50	46	42	40	37
	50	52	52	52	52	52	52	52	52	50	46	42	40	37
	60	48	48	48	48	48	48	48	48	48	46	42	40	37
	70	45	45	45	45	45	45	45	45	45	45	42	40	37
	80	42	42	42	42	42	42	42	42	42	42	42	40	37
	90	40	40	40	40	40	40	40	40	40	40	40	40	37
Zone 3e	0	83	76	70	65	61	57	54	48	43	40	37	35	32
	10	83	76	70	65	61	57	54	48	43	40	37	35	32
	20	75	74	70	65	61	57	54	48	43	40	37	35	32
	30	64	64	64	64	61	57	54	48	43	40	37	35	32
	40	57	57	57	57	57	57	54	48	43	40	37	35	32
	50	52	52	52	52	52	52	52	48	43	40	37	35	32
	60	48	48	48	48	48	48	48	48	43	40	37	35	32
	70	45	45	45	45	45	45	45	45	43	40	37	35	32
	80	42	42	42	42	42	42	42	42	42	40	37	35	32
	90	40	40	40	40	40	40	40	40	40	40	37	35	32

Notes:

1. Tables are based on critical rail span for load combinations as specified in chapter 2 of the ASCE 7-16 and allowable design loads per the 2015 Aluminum Design Manual.
2. Panels are assumed to be in portrait orientation with a maximum length of 67.5"

Structural ENGINUITY INC
Ingenuity in Engineering

SUNMODO®

Max Rail Spans for SunModo SMR100 System

Table 36a

Mean Roof Height: 15 < h ≤ 30 ft
Roof Angle: 27 < θ ≤ 45 degrees
Exposure Category: D

Panel Orientation: Portrait
North/South Support γ_E = 1
Roof Type : Gable

Roof Wind Zone	Ground Snow Load (psf)	Wind Speed (mph)												
		90	95	100	105	110	115	120	130	140	150	160	170	180
Zones 1, 2e, & 2r	0	101	99	96	94	91	87	84	75	66	59	54	49	45
	10	86	85	83	82	80	79	77	75	66	59	54	49	45
	20	73	72	71	71	70	69	68	66	64	59	54	49	45
	30	64	64	64	63	62	62	61	59	58	56	54	49	45
	40	57	57	57	57	57	56	56	55	53	52	51	49	45
	50	52	52	52	52	52	52	52	51	50	49	48	46	45
	60	48	48	48	48	48	48	48	48	47	46	45	44	43
	70	45	45	45	45	45	45	45	45	44	44	43	42	41
	80	42	42	42	42	42	42	42	42	42	42	41	40	40
	90	40	40	40	40	40	40	40	40	40	40	39	39	38
Zones 2n & 3r	0	101	96	92	88	84	80	75	66	60	54	49	46	42
	10	86	85	83	82	80	79	75	66	60	54	49	46	42
	20	73	72	71	71	70	69	68	66	60	54	49	46	42
	30	64	64	64	63	62	62	61	59	58	54	49	46	42
	40	57	57	57	57	57	56	56	55	53	52	49	46	42
	50	52	52	52	52	52	52	52	51	50	49	48	46	42
	60	48	48	48	48	48	48	48	48	47	46	45	44	42
	70	45	45	45	45	45	45	45	45	44	44	43	42	41
	80	42	42	42	42	42	42	42	42	42	42	41	40	40
	90	40	40	40	40	40	40	40	40	40	40	39	39	38
Zone 3e	0	92	87	84	78	73	68	64	57	51	46	43	40	37
	10	86	85	83	78	73	68	64	57	51	46	43	40	37
	20	73	72	71	71	70	68	64	57	51	46	43	40	37
	30	64	64	64	63	62	62	61	57	51	46	43	40	37
	40	57	57	57	57	57	56	56	55	51	46	43	40	37
	50	52	52	52	52	52	52	52	51	50	46	43	40	37
	60	48	48	48	48	48	48	48	48	47	46	43	40	37
	70	45	45	45	45	45	45	45	45	44	44	43	40	37
	80	42	42	42	42	42	42	42	42	42	42	41	40	37
	90	40	40	40	40	40	40	40	40	40	40	39	39	37

Notes:

1. Tables are based on critical rail span for load combinations as specified in chapter 2 of the ASCE 7-16 and allowable design loads per the 2015 Aluminum Design Manual.
2. Panels are assumed to be in portrait orientation with a maximum length of 67.5"

Structural ENGINUITY INC
Ingenuity in Engineering

SUNMODO®

Max Rail Spans for SunModo SMR100 System

Table 36b	Mean Roof Height: 15 < h ≤ 30 ft Roof Angle: 27 < θ ≤ 45 degrees Exposure Category: D	Panel Orientation: Portrait North/South Support γ_E = 1.5 Roof Type : Gable

Roof Wind Zone	Ground Snow Load (psf)	Wind Speed (mph)												
		90	95	100	105	110	115	120	130	140	150	160	170	180
Zones 1, 2e, & 2r	0	91	86	83	76	70	65	61	54	49	44	41	38	36
	10	86	85	83	76	70	65	61	54	49	44	41	38	36
	20	73	72	71	71	70	65	61	54	49	44	41	38	36
	30	64	64	64	63	62	62	61	54	49	44	41	38	36
	40	57	57	57	57	57	56	56	54	49	44	41	38	36
	50	52	52	52	52	52	52	52	51	49	44	41	38	36
	60	48	48	48	48	48	48	48	48	47	44	41	38	36
	70	45	45	45	45	45	45	45	45	44	44	41	38	36
	80	42	42	42	42	42	42	42	42	42	42	41	38	36
	90	40	40	40	40	40	40	40	40	40	40	39	38	36
Zones 2n & 3r	0	84	79	73	67	63	59	56	50	45	41	39	36	34
	10	84	79	73	67	63	59	56	50	45	41	39	36	34
	20	73	72	71	67	63	59	56	50	45	41	39	36	34
	30	64	64	64	63	62	59	56	50	45	41	39	36	34
	40	57	57	57	57	57	56	56	50	45	41	39	36	34
	50	52	52	52	52	52	52	52	50	45	41	39	36	34
	60	48	48	48	48	48	48	48	48	45	41	39	36	34
	70	45	45	45	45	45	45	45	45	44	41	39	36	34
	80	42	42	42	42	42	42	42	42	42	41	39	36	34
	90	40	40	40	40	40	40	40	40	40	40	39	36	34
Zone 3e	0	72	67	62	58	54	51	48	43	39	36	34	31	29
	10	72	67	62	58	54	51	48	43	39	36	34	31	29
	20	72	67	62	58	54	51	48	43	39	36	34	31	29
	30	64	64	62	58	54	51	48	43	39	36	34	31	29
	40	57	57	57	57	54	51	48	43	39	36	34	31	29
	50	52	52	52	52	52	51	48	43	39	36	34	31	29
	60	48	48	48	48	48	48	48	43	39	36	34	31	29
	70	45	45	45	45	45	45	45	43	39	36	34	31	29
	80	42	42	42	42	42	42	42	42	39	36	34	31	29
	90	40	40	40	40	40	40	40	40	39	36	34	31	29

Notes:

1. Tables are based on critical rail span for load combinations as specified in chapter 2 of the ASCE 7-16 and allowable design loads per the 2015 Aluminum Design Manual.
2. Panels are assumed to be in portrait orientation with a maximum length of 67.5"

Structural ENGINUITY INC
Ingenuity in Engineering

SUNMODO®

Max Rail Spans for SunModo SMR100 System

Table 37a

Mean Roof Height: 15 < h ≤ 30 ft
Roof Angle: 7 < θ ≤ 20 degrees
Exposure Category: B

Panel Orientation: Portrait
North/South Support γ_E = 1
Roof Type : Hip h/B = ≥ 0.8

Roof Wind Zone	Ground Snow Load (psf)	Wind Speed (mph)												
		90	95	100	105	110	115	120	130	140	150	160	170	180
Zone 1	0	101	101	101	101	101	101	99	92	84	76	70	65	61
	10	80	80	80	80	80	80	80	79	78	76	70	65	61
	20	62	62	62	62	62	62	62	62	62	62	61	60	59
	30	62	62	62	62	62	62	62	62	62	62	61	60	59
	40	55	55	55	55	55	55	55	55	55	55	55	55	54
	50	50	50	50	50	50	50	50	50	50	50	50	50	50
	60	46	46	46	46	46	46	46	46	46	46	46	46	46
	70	43	43	43	43	43	43	43	43	43	43	43	43	43
	80	40	40	40	40	40	40	40	40	40	40	40	40	40
	90	38	38	38	38	38	38	38	38	38	38	38	38	38
Zone 2r	0	101	101	101	101	98	94	91	82	73	67	61	56	52
	10	80	80	80	80	80	80	80	79	73	67	61	56	52
	20	62	62	62	62	62	62	62	62	62	62	61	56	52
	30	62	62	62	62	62	62	62	62	62	62	61	56	52
	40	55	55	55	55	55	55	55	55	55	55	55	55	52
	50	50	50	50	50	50	50	50	50	50	50	50	50	50
	60	46	46	46	46	46	46	46	46	46	46	46	46	46
	70	43	43	43	43	43	43	43	43	43	43	43	43	43
	80	40	40	40	40	40	40	40	40	40	40	40	40	40
	90	38	38	38	38	38	38	38	38	38	38	38	38	38
Zones 2e & 3	0	101	101	101	99	95	91	87	77	69	63	58	53	49
	10	80	80	80	80	80	80	80	77	69	63	58	53	49
	20	62	62	62	62	62	62	62	62	62	62	58	53	49
	30	62	62	62	62	62	62	62	62	62	62	58	53	49
	40	55	55	55	55	55	55	55	55	55	55	55	53	49
	50	50	50	50	50	50	50	50	50	50	50	50	50	49
	60	46	46	46	46	46	46	46	46	46	46	46	46	46
	70	43	43	43	43	43	43	43	43	43	43	43	43	43
	80	40	40	40	40	40	40	40	40	40	40	40	40	40
	90	38	38	38	38	38	38	38	38	38	38	38	38	38

Notes:

1. Tables are based on critical rail span for load combinations as specified in chapter 2 of the ASCE 7-16 and allowable design loads per the 2015 Aluminum Design Manual.
2. Panels are assumed to be in portrait orientation with a maximum length of 67.5"

Structural ENGINUITY INC
Ingenuity in Engineering

SUNMODO®

Max Rail Spans for SunModo SMR100 System

Table 37b

Mean Roof Height: 15 < h ≤ 30 ft
Roof Angle: 7 < θ ≤ 20 degrees
Exposure Category: B

Panel Orientation: Portrait
North/South Support γ_E = 1.5
Roof Type : Hip h/B = ≥ 0.8

Roof Wind Zone	Ground Snow Load (psf)	Wind Speed (mph)												
		90	95	100	105	110	115	120	130	140	150	160	170	180
Zone 1	0	101	101	97	93	89	83	79	71	64	59	55	51	47
	10	80	80	80	80	80	80	79	71	64	59	55	51	47
	20	62	62	62	62	62	62	62	62	62	59	55	51	47
	30	62	62	62	62	62	62	62	62	62	59	55	51	47
	40	55	55	55	55	55	55	55	55	55	55	55	51	47
	50	50	50	50	50	50	50	50	50	50	50	50	50	47
	60	46	46	46	46	46	46	46	46	46	46	46	46	46
	70	43	43	43	43	43	43	43	43	43	43	43	43	43
	80	40	40	40	40	40	40	40	40	40	40	40	40	40
	90	38	38	38	38	38	38	38	38	38	38	38	38	38
Zone 2r	0	98	93	89	83	78	73	68	61	55	50	46	43	40
	10	80	80	80	80	78	73	68	61	55	50	46	43	40
	20	62	62	62	62	62	62	62	61	55	50	46	43	40
	30	62	62	62	62	62	62	62	61	55	50	46	43	40
	40	55	55	55	55	55	55	55	55	55	50	46	43	40
	50	50	50	50	50	50	50	50	50	50	50	46	43	40
	60	46	46	46	46	46	46	46	46	46	46	46	43	40
	70	43	43	43	43	43	43	43	43	43	43	43	43	40
	80	40	40	40	40	40	40	40	40	40	40	40	40	40
	90	38	38	38	38	38	38	38	38	38	38	38	38	38
Zones 2e & 3	0	95	90	84	78	73	69	65	58	52	48	44	41	38
	10	80	80	80	78	73	69	65	58	52	48	44	41	38
	20	62	62	62	62	62	62	62	58	52	48	44	41	38
	30	62	62	62	62	62	62	62	58	52	48	44	41	38
	40	55	55	55	55	55	55	55	55	52	48	44	41	38
	50	50	50	50	50	50	50	50	50	50	48	44	41	38
	60	46	46	46	46	46	46	46	46	46	46	44	41	38
	70	43	43	43	43	43	43	43	43	43	43	43	41	38
	80	40	40	40	40	40	40	40	40	40	40	40	40	38
	90	38	38	38	38	38	38	38	38	38	38	38	38	38

Notes:

1. Tables are based on critical rail span for load combinations as specified in chapter 2 of the ASCE 7-16 and allowable design loads per the 2015 Aluminum Design Manual.
2. Panels are assumed to be in portrait orientation with a maximum length of 67.5"

Structural ENGINUITY INC
Ingenuity in Engineering

SUNMODO®

Max Rail Spans for SunModo SMR100 System

Table 38a

Mean Roof Height: 15 < h ≤ 30 ft
Roof Angle: 7 < θ ≤ 20 degrees
Exposure Category: C

Panel Orientation: Portrait
North/South Support γ_E = 1
Roof Type : Hip h/B = ≥ 0.8

Roof Wind Zone	Ground Snow Load (psf)	Wind Speed (mph)												
		90	95	100	105	110	115	120	130	140	150	160	170	180
Zone 1	0	101	101	101	96	92	88	82	74	67	62	57	53	49
	10	80	80	80	80	79	79	78	74	67	62	57	53	49
	20	62	62	62	62	62	62	62	62	61	60	57	53	49
	30	62	62	62	62	62	62	62	62	61	60	57	53	49
	40	55	55	55	55	55	55	55	55	55	54	53	53	49
	50	50	50	50	50	50	50	50	50	50	50	50	49	48
	60	46	46	46	46	46	46	46	46	46	46	46	46	45
	70	43	43	43	43	43	43	43	43	43	43	43	43	43
	80	40	40	40	40	40	40	40	40	40	40	40	40	40
	90	38	38	38	38	38	38	38	38	38	38	38	38	38
Zone 2r	0	101	96	92	88	82	77	72	64	58	53	48	45	42
	10	80	80	80	80	79	77	72	64	58	53	48	45	42
	20	62	62	62	62	62	62	62	62	58	53	48	45	42
	30	62	62	62	62	62	62	62	62	58	53	48	45	42
	40	55	55	55	55	55	55	55	55	55	53	48	45	42
	50	50	50	50	50	50	50	50	50	50	50	48	45	42
	60	46	46	46	46	46	46	46	46	46	46	46	45	42
	70	43	43	43	43	43	43	43	43	43	43	43	43	42
	80	40	40	40	40	40	40	40	40	40	40	40	40	40
	90	38	38	38	38	38	38	38	38	38	38	38	38	38
Zones 2e & 3	0	98	93	89	83	77	72	68	61	55	50	46	42	40
	10	80	80	80	80	77	72	68	61	55	50	46	42	40
	20	62	62	62	62	62	62	62	61	55	50	46	42	40
	30	62	62	62	62	62	62	62	61	55	50	46	42	40
	40	55	55	55	55	55	55	55	55	55	50	46	42	40
	50	50	50	50	50	50	50	50	50	50	50	46	42	40
	60	46	46	46	46	46	46	46	46	46	46	46	42	40
	70	43	43	43	43	43	43	43	43	43	43	43	42	40
	80	40	40	40	40	40	40	40	40	40	40	40	40	40
	90	38	38	38	38	38	38	38	38	38	38	38	38	38

Notes:

1. Tables are based on critical rail span for load combinations as specified in chapter 2 of the ASCE 7-16 and allowable design loads per the 2015 Aluminum Design Manual.
2. Panels are assumed to be in portrait orientation with a maximum length of 67.5"

Structural ENGINUITY INC
Ingenuity in Engineering

SUNMODO®

Max Rail Spans for SunModo SMR100 System

Table 38b

Mean Roof Height: 15 < h ≤ 30 ft
Roof Angle: 7 < θ ≤ 20 degrees
Exposure Category: C

Panel Orientation: Portrait
North/South Support γ_E = 1.5
Roof Type : Hip h/B = ≥ 0.8

Roof Wind Zone	Ground Snow Load (psf)	Wind Speed (mph)												
		90	95	100	105	110	115	120	130	140	150	160	170	180
Zone 1	0	92	86	80	75	71	67	63	57	52	48	45	42	39
	10	80	80	80	75	71	67	63	57	52	48	45	42	39
	20	62	62	62	62	62	62	62	57	52	48	45	42	39
	30	62	62	62	62	62	62	62	57	52	48	45	42	39
	40	55	55	55	55	55	55	55	55	52	48	45	42	39
	50	50	50	50	50	50	50	50	50	50	48	45	42	39
	60	46	46	46	46	46	46	46	46	46	46	45	42	39
	70	43	43	43	43	43	43	43	43	43	43	43	42	39
	80	40	40	40	40	40	40	40	40	40	40	40	40	39
	90	38	38	38	38	38	38	38	38	38	38	38	38	38
Zone 2r	0	82	75	70	65	61	57	54	49	44	41	38	36	34
	10	80	75	70	65	61	57	54	49	44	41	38	36	34
	20	62	62	62	62	61	57	54	49	44	41	38	36	34
	30	62	62	62	62	61	57	54	49	44	41	38	36	34
	40	55	55	55	55	55	55	54	49	44	41	38	36	34
	50	50	50	50	50	50	50	50	49	44	41	38	36	34
	60	46	46	46	46	46	46	46	46	44	41	38	36	34
	70	43	43	43	43	43	43	43	43	43	41	38	36	34
	80	40	40	40	40	40	40	40	40	40	40	38	36	34
	90	38	38	38	38	38	38	38	38	38	38	38	36	34
Zones 2e & 3	0	77	71	66	62	58	54	51	46	42	39	37	34	32
	10	77	71	66	62	58	54	51	46	42	39	37	34	32
	20	62	62	62	62	58	54	51	46	42	39	37	34	32
	30	62	62	62	62	58	54	51	46	42	39	37	34	32
	40	55	55	55	55	55	54	51	46	42	39	37	34	32
	50	50	50	50	50	50	50	50	46	42	39	37	34	32
	60	46	46	46	46	46	46	46	46	42	39	37	34	32
	70	43	43	43	43	43	43	43	43	42	39	37	34	32
	80	40	40	40	40	40	40	40	40	40	39	37	34	32
	90	38	38	38	38	38	38	38	38	38	38	37	34	32

Notes:

1. Tables are based on critical rail span for load combinations as specified in chapter 2 of the ASCE 7-16 and allowable design loads per the 2015 Aluminum Design Manual.
2. Panels are assumed to be in portrait orientation with a maximum length of 67.5"

Structural ENGINUITY INC
Ingenuity in Engineering

SUNMODO®

Max Rail Spans for SunModo SMR100 System

Table 39a

Mean Roof Height: 15 < h ≤ 30 ft
Roof Angle: 7 < θ ≤ 20 degrees
Exposure Category: D

Panel Orientation: Portrait
North/South Support γ_E = 1
Roof Type : Hip h/B = ≥ 0.8

Roof Wind Zone	Ground Snow Load (psf)	Wind Speed (mph)												
		90	95	100	105	110	115	120	130	140	150	160	170	180
Zone 1	0	101	97	93	88	83	78	74	66	60	56	51	48	45
	10	80	80	80	79	78	77	74	66	60	56	51	48	45
	20	62	62	62	62	62	62	62	61	59	56	51	48	45
	30	62	62	62	62	62	62	62	61	59	56	51	48	45
	40	55	55	55	55	55	55	55	55	54	53	51	48	45
	50	50	50	50	50	50	50	50	50	50	49	48	48	45
	60	46	46	46	46	46	46	46	46	46	46	45	45	44
	70	43	43	43	43	43	43	43	43	43	43	43	42	42
	80	40	40	40	40	40	40	40	40	40	40	40	40	40
	90	38	38	38	38	38	38	38	38	38	38	38	38	38
Zone 2r	0	94	89	83	77	72	68	64	57	52	47	43	40	38
	10	80	80	80	77	72	68	64	57	52	47	43	40	38
	20	62	62	62	62	62	62	62	57	52	47	43	40	38
	30	62	62	62	62	62	62	62	57	52	47	43	40	38
	40	55	55	55	55	55	55	55	55	52	47	43	40	38
	50	50	50	50	50	50	50	50	50	50	47	43	40	38
	60	46	46	46	46	46	46	46	46	46	46	43	40	38
	70	43	43	43	43	43	43	43	43	43	43	43	40	38
	80	40	40	40	40	40	40	40	40	40	40	40	40	38
	90	38	38	38	38	38	38	38	38	38	38	38	38	38
Zones 2e & 3	0	90	85	78	73	68	64	60	54	49	45	41	39	37
	10	80	80	78	73	68	64	60	54	49	45	41	39	37
	20	62	62	62	62	62	62	60	54	49	45	41	39	37
	30	62	62	62	62	62	62	60	54	49	45	41	39	37
	40	55	55	55	55	55	55	55	54	49	45	41	39	37
	50	50	50	50	50	50	50	50	50	49	45	41	39	37
	60	46	46	46	46	46	46	46	46	46	45	41	39	37
	70	43	43	43	43	43	43	43	43	43	43	41	39	37
	80	40	40	40	40	40	40	40	40	40	40	40	39	37
	90	38	38	38	38	38	38	38	38	38	38	38	38	37

Notes:

1. Tables are based on critical rail span for load combinations as specified in chapter 2 of the ASCE 7-16 and allowable design loads per the 2015 Aluminum Design Manual.
2. Panels are assumed to be in portrait orientation with a maximum length of 67.5"

Structural ENGINUITY INC
Ingenuity in Engineering

SUNMODO®

Max Rail Spans for SunModo SMR100 System

Table 39b

Mean Roof Height: 15 < h ≤ 30 ft
Roof Angle: 7 < θ ≤ 20 degrees
Exposure Category: D

Panel Orientation: Portrait
North/South Support γ_E = 1.5
Roof Type : Hip h/B = ≥ 0.8

Roof Wind Zone	Ground Snow Load (psf)	Wind Speed (mph)												
		90	95	100	105	110	115	120	130	140	150	160	170	180
Zone 1	0	82	77	72	67	63	60	57	52	47	44	41	38	36
	10	80	77	72	67	63	60	57	52	47	44	41	38	36
	20	62	62	62	62	62	60	57	52	47	44	41	38	36
	30	62	62	62	62	62	60	57	52	47	44	41	38	36
	40	55	55	55	55	55	55	55	52	47	44	41	38	36
	50	50	50	50	50	50	50	50	50	47	44	41	38	36
	60	46	46	46	46	46	46	46	46	46	44	41	38	36
	70	43	43	43	43	43	43	43	43	43	43	41	38	36
	80	40	40	40	40	40	40	40	40	40	40	40	38	36
	90	38	38	38	38	38	38	38	38	38	38	38	38	36
Zone 2r	0	72	67	62	58	54	51	48	44	40	37	35	33	31
	10	72	67	62	58	54	51	48	44	40	37	35	33	31
	20	62	62	62	58	54	51	48	44	40	37	35	33	31
	30	62	62	62	58	54	51	48	44	40	37	35	33	31
	40	55	55	55	55	54	51	48	44	40	37	35	33	31
	50	50	50	50	50	50	50	48	44	40	37	35	33	31
	60	46	46	46	46	46	46	46	44	40	37	35	33	31
	70	43	43	43	43	43	43	43	43	40	37	35	33	31
	80	40	40	40	40	40	40	40	40	40	37	35	33	31
	90	38	38	38	38	38	38	38	38	38	37	35	33	31
Zones 2e & 3	0	68	63	59	55	52	49	46	42	38	36	33	31	30
	10	68	63	59	55	52	49	46	42	38	36	33	31	30
	20	62	62	59	55	52	49	46	42	38	36	33	31	30
	30	62	62	59	55	52	49	46	42	38	36	33	31	30
	40	55	55	55	55	52	49	46	42	38	36	33	31	30
	50	50	50	50	50	50	49	46	42	38	36	33	31	30
	60	46	46	46	46	46	46	46	42	38	36	33	31	30
	70	43	43	43	43	43	43	43	42	38	36	33	31	30
	80	40	40	40	40	40	40	40	40	38	36	33	31	30
	90	38	38	38	38	38	38	38	38	38	36	33	31	30

Notes:

1. Tables are based on critical rail span for load combinations as specified in chapter 2 of the ASCE 7-16 and allowable design loads per the 2015 Aluminum Design Manual.
2. Panels are assumed to be in portrait orientation with a maximum length of 67.5"

Structural ENGINUITY INC
Ingenuity in Engineering

SUNMODO®

Max Rail Spans for SunModo SMR100 System

Table 40a

Mean Roof Height: 15 < h ≤ 30 ft
Roof Angle: 7 < θ ≤ 20 degrees
Exposure Category: B

Panel Orientation: Portrait
North/South Support γ_E = 1
Roof Type : Hip h/B = ≤ 0.5

Roof Wind Zone	Ground Snow Load (psf)	Wind Speed (mph)												
		90	95	100	105	110	115	120	130	140	150	160	170	180
Zone 1	0	101	101	101	101	101	101	101	101	99	93	87	80	75
	10	80	80	80	80	80	80	79	78	76	75	73	71	70
	20	62	62	62	62	62	62	62	62	62	62	61	60	59
	30	62	62	62	62	62	62	62	62	62	62	61	60	59
	40	55	55	55	55	55	55	55	55	55	55	55	55	54
	50	50	50	50	50	50	50	50	50	50	50	50	50	50
	60	46	46	46	46	46	46	46	46	46	46	46	46	46
	70	43	43	43	43	43	43	43	43	43	43	43	43	43
	80	40	40	40	40	40	40	40	40	40	40	40	40	40
	90	38	38	38	38	38	38	38	38	38	38	38	38	38
Zone 2r	0	101	101	101	101	98	94	91	82	73	67	61	56	52
	10	80	80	80	80	80	80	79	78	73	67	61	56	52
	20	62	62	62	62	62	62	62	62	62	62	61	56	52
	30	62	62	62	62	62	62	62	62	62	62	61	56	52
	40	55	55	55	55	55	55	55	55	55	55	55	55	52
	50	50	50	50	50	50	50	50	50	50	50	50	50	50
	60	46	46	46	46	46	46	46	46	46	46	46	46	46
	70	43	43	43	43	43	43	43	43	43	43	43	43	43
	80	40	40	40	40	40	40	40	40	40	40	40	40	40
	90	38	38	38	38	38	38	38	38	38	38	38	38	38
Zones 2e & 3	0	101	101	101	101	101	101	101	95	89	81	74	68	63
	10	80	80	80	80	80	80	79	78	76	75	73	68	63
	20	62	62	62	62	62	62	62	62	62	62	61	60	59
	30	62	62	62	62	62	62	62	62	62	62	61	60	59
	40	55	55	55	55	55	55	55	55	55	55	55	55	54
	50	50	50	50	50	50	50	50	50	50	50	50	50	50
	60	46	46	46	46	46	46	46	46	46	46	46	46	46
	70	43	43	43	43	43	43	43	43	43	43	43	43	43
	80	40	40	40	40	40	40	40	40	40	40	40	40	40
	90	38	38	38	38	38	38	38	38	38	38	38	38	38

Notes:

1. Tables are based on critical rail span for load combinations as specified in chapter 2 of the ASCE 7-16 and allowable design loads per the 2015 Aluminum Design Manual.
2. Panels are assumed to be in portrait orientation with a maximum length of 67.5"

Structural ENGINUITY INC
Ingenuity in Engineering

SUNMODO®

Max Rail Spans for SunModo SMR100 System

Table 40b

Mean Roof Height: 15 < h ≤ 30 ft
Roof Angle: 7 < θ ≤ 20 degrees
Exposure Category: B

Panel Orientation: Portrait
North/South Support γ_E = 1.5
Roof Type : Hip h/B = ≤ 0.5

Roof Wind Zone	Ground Snow Load (psf)	Wind Speed (mph)												
		90	95	100	105	110	115	120	130	140	150	160	170	180
Zone 1	0	101	101	101	101	101	99	95	88	79	73	67	62	58
	10	80	80	80	80	80	80	79	78	76	73	67	62	58
	20	62	62	62	62	62	62	62	62	62	62	61	60	58
	30	62	62	62	62	62	62	62	62	62	62	61	60	58
	40	55	55	55	55	55	55	55	55	55	55	55	55	54
	50	50	50	50	50	50	50	50	50	50	50	50	50	50
	60	46	46	46	46	46	46	46	46	46	46	46	46	46
	70	43	43	43	43	43	43	43	43	43	43	43	43	43
	80	40	40	40	40	40	40	40	40	40	40	40	40	40
	90	38	38	38	38	38	38	38	38	38	38	38	38	38
Zone 2r	0	98	93	89	83	78	73	68	61	55	50	46	43	40
	10	80	80	80	80	78	73	68	61	55	50	46	43	40
	20	62	62	62	62	62	62	62	61	55	50	46	43	40
	30	62	62	62	62	62	62	62	61	55	50	46	43	40
	40	55	55	55	55	55	55	55	55	55	50	46	43	40
	50	50	50	50	50	50	50	50	50	50	50	46	43	40
	60	46	46	46	46	46	46	46	46	46	46	46	43	40
	70	43	43	43	43	43	43	43	43	43	43	43	43	40
	80	40	40	40	40	40	40	40	40	40	40	40	40	40
	90	38	38	38	38	38	38	38	38	38	38	38	38	38
Zones 2e & 3	0	101	101	101	96	92	89	84	74	67	61	56	51	48
	10	80	80	80	80	80	80	79	74	67	61	56	51	48
	20	62	62	62	62	62	62	62	62	62	61	56	51	48
	30	62	62	62	62	62	62	62	62	62	61	56	51	48
	40	55	55	55	55	55	55	55	55	55	55	55	51	48
	50	50	50	50	50	50	50	50	50	50	50	50	50	48
	60	46	46	46	46	46	46	46	46	46	46	46	46	46
	70	43	43	43	43	43	43	43	43	43	43	43	43	43
	80	40	40	40	40	40	40	40	40	40	40	40	40	40
	90	38	38	38	38	38	38	38	38	38	38	38	38	38

Notes:

1. Tables are based on critical rail span for load combinations as specified in chapter 2 of the ASCE 7-16 and allowable design loads per the 2015 Aluminum Design Manual.
2. Panels are assumed to be in portrait orientation with a maximum length of 67.5"

Structural ENGINUITY INC
Ingenuity in Engineering

SUNMODO®

Max Rail Spans for SunModo SMR100 System

Table 41a

Mean Roof Height: 15 < h ≤ 30 ft
Roof Angle: 7 < θ ≤ 20 degrees
Exposure Category: C

Panel Orientation: Portrait
North/South Support γ_E = 1
Roof Type : Hip h/B = ≤ 0.5

Roof Wind Zone	Ground Snow Load (psf)	Wind Speed (mph)												
		90	95	100	105	110	115	120	130	140	150	160	170	180
Zone 1	0	101	101	101	101	101	101	98	91	83	76	70	65	60
	10	80	80	80	79	78	77	76	74	72	70	68	65	60
	20	62	62	62	62	62	62	62	61	60	59	58	57	55
	30	62	62	62	62	62	62	62	61	60	59	58	57	55
	40	55	55	55	55	55	55	55	55	55	54	53	52	51
	50	50	50	50	50	50	50	50	50	50	50	49	49	48
	60	46	46	46	46	46	46	46	46	46	46	46	46	45
	70	43	43	43	43	43	43	43	43	43	43	43	43	43
	80	40	40	40	40	40	40	40	40	40	40	40	40	40
	90	38	38	38	38	38	38	38	38	38	38	38	38	38
Zone 2r	0	101	96	92	88	82	77	72	64	58	53	48	45	42
	10	80	80	80	79	78	77	72	64	58	53	48	45	42
	20	62	62	62	62	62	62	62	61	58	53	48	45	42
	30	62	62	62	62	62	62	62	61	58	53	48	45	42
	40	55	55	55	55	55	55	55	55	55	53	48	45	42
	50	50	50	50	50	50	50	50	50	50	50	48	45	42
	60	46	46	46	46	46	46	46	46	46	46	46	45	42
	70	43	43	43	43	43	43	43	43	43	43	43	43	42
	80	40	40	40	40	40	40	40	40	40	40	40	40	40
	90	38	38	38	38	38	38	38	38	38	38	38	38	38
Zones 2e & 3	0	101	101	101	99	95	91	88	78	70	64	58	54	50
	10	80	80	80	79	78	77	76	74	70	64	58	54	50
	20	62	62	62	62	62	62	62	61	60	59	58	54	50
	30	62	62	62	62	62	62	62	61	60	59	58	54	50
	40	55	55	55	55	55	55	55	55	55	54	53	52	50
	50	50	50	50	50	50	50	50	50	50	50	49	49	48
	60	46	46	46	46	46	46	46	46	46	46	46	46	45
	70	43	43	43	43	43	43	43	43	43	43	43	43	43
	80	40	40	40	40	40	40	40	40	40	40	40	40	40
	90	38	38	38	38	38	38	38	38	38	38	38	38	38

Notes:

1. Tables are based on critical rail span for load combinations as specified in chapter 2 of the ASCE 7-16 and allowable design loads per the 2015 Aluminum Design Manual.
2. Panels are assumed to be in portrait orientation with a maximum length of 67.5"

Structural ENGINUITY INC
Ingenuity in Engineering

SUNMODO®

Max Rail Spans for SunModo SMR100 System

Table 41b

Mean Roof Height: 15 < h ≤ 30 ft
Roof Angle: 7 < θ ≤ 20 degrees
Exposure Category: C

Panel Orientation: Portrait
North/South Support γ_E = 1.5
Roof Type : Hip h/B = ≤ 0.5

Roof Wind Zone	Ground Snow Load (psf)	Wind Speed (mph)												
		90	95	100	105	110	115	120	130	140	150	160	170	180
Zone 1	0	101	101	96	92	88	83	78	70	64	59	54	50	47
	10	80	80	80	79	78	77	76	70	64	59	54	50	47
	20	62	62	62	62	62	62	62	61	60	59	54	50	47
	30	62	62	62	62	62	62	62	61	60	59	54	50	47
	40	55	55	55	55	55	55	55	55	55	54	53	50	47
	50	50	50	50	50	50	50	50	50	50	50	49	49	47
	60	46	46	46	46	46	46	46	46	46	46	46	46	45
	70	43	43	43	43	43	43	43	43	43	43	43	43	43
	80	40	40	40	40	40	40	40	40	40	40	40	40	40
	90	38	38	38	38	38	38	38	38	38	38	38	38	38
Zone 2r	0	82	75	70	65	61	57	54	49	44	41	38	36	34
	10	80	75	70	65	61	57	54	49	44	41	38	36	34
	20	62	62	62	62	61	57	54	49	44	41	38	36	34
	30	62	62	62	62	61	57	54	49	44	41	38	36	34
	40	55	55	55	55	55	55	54	49	44	41	38	36	34
	50	50	50	50	50	50	50	50	49	44	41	38	36	34
	60	46	46	46	46	46	46	46	46	44	41	38	36	34
	70	43	43	43	43	43	43	43	43	43	41	38	36	34
	80	40	40	40	40	40	40	40	40	40	40	38	36	34
	90	38	38	38	38	38	38	38	38	38	38	38	36	34
Zones 2e & 3	0	95	91	85	79	74	70	66	59	53	49	45	42	39
	10	80	80	80	79	74	70	66	59	53	49	45	42	39
	20	62	62	62	62	62	62	62	59	53	49	45	42	39
	30	62	62	62	62	62	62	62	59	53	49	45	42	39
	40	55	55	55	55	55	55	55	55	53	49	45	42	39
	50	50	50	50	50	50	50	50	50	50	49	45	42	39
	60	46	46	46	46	46	46	46	46	46	46	45	42	39
	70	43	43	43	43	43	43	43	43	43	43	43	42	39
	80	40	40	40	40	40	40	40	40	40	40	40	40	39
	90	38	38	38	38	38	38	38	38	38	38	38	38	38

Notes:

1. Tables are based on critical rail span for load combinations as specified in chapter 2 of the ASCE 7-16 and allowable design loads per the 2015 Aluminum Design Manual.
2. Panels are assumed to be in portrait orientation with a maximum length of 67.5"

Structural ENGINUITY INC
Ingenuity in Engineering

SUNMODO®

Max Rail Spans for SunModo SMR100 System

Table 42a

Mean Roof Height: 15 < h ≤ 30 ft
Roof Angle: 7 < θ ≤ 20 degrees
Exposure Category: D

Panel Orientation: Portrait
North/South Support γ_E = 1
Roof Type : Hip h/B = ≤ 0.5

Roof Wind Zone	Ground Snow Load (psf)	Wind Speed (mph)												
		90	95	100	105	110	115	120	130	140	150	160	170	180
Zone 1	0	101	101	101	101	98	94	91	82	74	68	63	58	54
	10	80	79	78	77	76	75	74	72	70	68	63	58	54
	20	62	62	62	62	62	62	61	60	59	57	56	55	53
	30	62	62	62	62	62	62	61	60	59	57	56	55	53
	40	55	55	55	55	55	55	55	55	54	53	52	51	50
	50	50	50	50	50	50	50	50	50	50	49	48	47	46
	60	46	46	46	46	46	46	46	46	46	46	45	45	44
	70	43	43	43	43	43	43	43	43	43	43	43	42	42
	80	40	40	40	40	40	40	40	40	40	40	40	40	40
	90	38	38	38	38	38	38	38	38	38	38	38	38	38
Zone 2r	0	94	89	83	77	72	68	64	57	52	47	43	40	38
	10	80	79	78	77	72	68	64	57	52	47	43	40	38
	20	62	62	62	62	62	62	61	57	52	47	43	40	38
	30	62	62	62	62	62	62	61	57	52	47	43	40	38
	40	55	55	55	55	55	55	55	55	52	47	43	40	38
	50	50	50	50	50	50	50	50	50	50	47	43	40	38
	60	46	46	46	46	46	46	46	46	46	46	43	40	38
	70	43	43	43	43	43	43	43	43	43	43	43	40	38
	80	40	40	40	40	40	40	40	40	40	40	40	40	38
	90	38	38	38	38	38	38	38	38	38	38	38	38	38
Zones 2e & 3	0	101	101	96	92	88	83	78	69	62	57	52	48	45
	10	80	79	78	77	76	75	74	69	62	57	52	48	45
	20	62	62	62	62	62	62	61	60	59	57	52	48	45
	30	62	62	62	62	62	62	61	60	59	57	52	48	45
	40	55	55	55	55	55	55	55	55	54	53	52	48	45
	50	50	50	50	50	50	50	50	50	50	49	48	47	45
	60	46	46	46	46	46	46	46	46	46	46	45	45	44
	70	43	43	43	43	43	43	43	43	43	43	43	42	42
	80	40	40	40	40	40	40	40	40	40	40	40	40	40
	90	38	38	38	38	38	38	38	38	38	38	38	38	38

Notes:

1. Tables are based on critical rail span for load combinations as specified in chapter 2 of the ASCE 7-16 and allowable design loads per the 2015 Aluminum Design Manual.
2. Panels are assumed to be in portrait orientation with a maximum length of 67.5"

Structural ENGINUITY INC
Ingenuity in Engineering

SUNMODO®

Max Rail Spans for SunModo SMR100 System

Table 42b

Mean Roof Height: 15 < h ≤ 30 ft
Roof Angle: 7 < θ ≤ 20 degrees
Exposure Category: D

Panel Orientation: Portrait
North/South Support γ_E = 1.5
Roof Type : Hip h/B = ≤ 0.5

Roof Wind Zone	Ground Snow Load (psf)	Wind Speed (mph)												
		90	95	100	105	110	115	120	130	140	150	160	170	180
Zone 1	0	98	93	89	83	78	74	70	63	58	53	49	46	43
	10	80	79	78	77	76	74	70	63	58	53	49	46	43
	20	62	62	62	62	62	62	61	60	58	53	49	46	43
	30	62	62	62	62	62	62	61	60	58	53	49	46	43
	40	55	55	55	55	55	55	55	55	54	53	49	46	43
	50	50	50	50	50	50	50	50	50	50	49	48	46	43
	60	46	46	46	46	46	46	46	46	46	46	45	45	43
	70	43	43	43	43	43	43	43	43	43	43	43	42	42
	80	40	40	40	40	40	40	40	40	40	40	40	40	40
	90	38	38	38	38	38	38	38	38	38	38	38	38	38
Zone 2r	0	72	67	62	58	54	51	48	44	40	37	35	33	31
	10	72	67	62	58	54	51	48	44	40	37	35	33	31
	20	62	62	62	58	54	51	48	44	40	37	35	33	31
	30	62	62	62	58	54	51	48	44	40	37	35	33	31
	40	55	55	55	55	54	51	48	44	40	37	35	33	31
	50	50	50	50	50	50	50	48	44	40	37	35	33	31
	60	46	46	46	46	46	46	46	44	40	37	35	33	31
	70	43	43	43	43	43	43	43	43	40	37	35	33	31
	80	40	40	40	40	40	40	40	40	40	37	35	33	31
	90	38	38	38	38	38	38	38	38	38	37	35	33	31
Zones 2e & 3	0	88	81	75	70	66	62	58	53	48	44	41	38	36
	10	80	79	75	70	66	62	58	53	48	44	41	38	36
	20	62	62	62	62	62	62	58	53	48	44	41	38	36
	30	62	62	62	62	62	62	58	53	48	44	41	38	36
	40	55	55	55	55	55	55	55	53	48	44	41	38	36
	50	50	50	50	50	50	50	50	50	48	44	41	38	36
	60	46	46	46	46	46	46	46	46	46	44	41	38	36
	70	43	43	43	43	43	43	43	43	43	43	41	38	36
	80	40	40	40	40	40	40	40	40	40	40	40	38	36
	90	38	38	38	38	38	38	38	38	38	38	38	38	36

Notes:

1. Tables are based on critical rail span for load combinations as specified in chapter 2 of the ASCE 7-16 and allowable design loads per the 2015 Aluminum Design Manual.
2. Panels are assumed to be in portrait orientation with a maximum length of 67.5"

Structural ENGINUITY INC
Ingenuity in Engineering

SUNMODO®

Max Rail Spans for SunModo SMR100 System

Table 43a

Mean Roof Height: 15 < h ≤ 30 ft
Roof Angle: 20 < θ ≤ 27 degrees
Exposure Category: B

Panel Orientation: Portrait
North/South Support γ_E = 1
Roof Type : Hip

Roof Wind Zone	Ground Snow Load (psf)	Wind Speed (mph)												
		90	95	100	105	110	115	120	130	140	150	160	170	180
Zone 1	0	101	101	101	101	101	101	101	101	101	96	90	85	78
	10	86	86	86	86	86	86	86	86	85	83	81	79	77
	20	73	73	73	73	73	73	73	73	72	70	69	68	66
	30	62	62	62	62	62	62	62	62	62	62	61	60	59
	40	55	55	55	55	55	55	55	55	55	55	55	55	54
	50	50	50	50	50	50	50	50	50	50	50	50	50	50
	60	46	46	46	46	46	46	46	46	46	46	46	46	46
	70	43	43	43	43	43	43	43	43	43	43	43	43	43
	80	40	40	40	40	40	40	40	40	40	40	40	40	40
	90	38	38	38	38	38	38	38	38	38	38	38	38	38
Zones 2e, 2r, & 3	0	101	101	101	101	101	101	99	92	86	78	71	64	59
	10	86	86	86	86	86	86	86	86	85	78	71	64	59
	20	73	73	73	73	73	73	73	73	72	70	69	64	59
	30	62	62	62	62	62	62	62	62	62	62	61	60	59
	40	55	55	55	55	55	55	55	55	55	55	55	55	54
	50	50	50	50	50	50	50	50	50	50	50	50	50	50
	60	46	46	46	46	46	46	46	46	46	46	46	46	46
	70	43	43	43	43	43	43	43	43	43	43	43	43	43
	80	40	40	40	40	40	40	40	40	40	40	40	40	40
	90	38	38	38	38	38	38	38	38	38	38	38	38	38

Notes:

1. Tables are based on critical rail span for load combinations as specified in chapter 2 of the ASCE 7-16 and allowable design loads per the 2015 Aluminum Design Manual.
2. Panels are assumed to be in portrait orientation with a maximum length of 67.5"

Structural ENGINUITY INC
Ingenuity in Engineering

SUNMODO®

Max Rail Spans for SunModo SMR100 System

Table 43b	Mean Roof Height: 15 < h ≤ 30 ft Roof Angle: 20 < θ ≤ 27 degrees Exposure Category: B	Panel Orientation: Portrait North/South Support γ_E = 1.5 Roof Type : Hip

Roof Wind Zone	Ground Snow Load (psf)	Wind Speed (mph)												
		90	95	100	105	110	115	120	130	140	150	160	170	180
Zone 1	0	101	101	101	101	101	101	98	91	85	76	69	63	58
	10	86	86	86	86	86	86	86	86	85	76	69	63	58
	20	73	73	73	73	73	73	73	73	72	70	69	63	58
	30	62	62	62	62	62	62	62	62	62	62	61	60	58
	40	55	55	55	55	55	55	55	55	55	55	55	55	54
	50	50	50	50	50	50	50	50	50	50	50	50	50	50
	60	46	46	46	46	46	46	46	46	46	46	46	46	46
	70	43	43	43	43	43	43	43	43	43	43	43	43	43
	80	40	40	40	40	40	40	40	40	40	40	40	40	40
	90	38	38	38	38	38	38	38	38	38	38	38	38	38
Zones 2e, 2r, & 3	0	101	101	97	93	89	86	80	71	64	58	53	49	45
	10	86	86	86	86	86	86	80	71	64	58	53	49	45
	20	73	73	73	73	73	73	73	71	64	58	53	49	45
	30	62	62	62	62	62	62	62	62	62	58	53	49	45
	40	55	55	55	55	55	55	55	55	55	55	53	49	45
	50	50	50	50	50	50	50	50	50	50	50	50	49	45
	60	46	46	46	46	46	46	46	46	46	46	46	46	45
	70	43	43	43	43	43	43	43	43	43	43	43	43	43
	80	40	40	40	40	40	40	40	40	40	40	40	40	40
	90	38	38	38	38	38	38	38	38	38	38	38	38	38

Notes:

1. Tables are based on critical rail span for load combinations as specified in chapter 2 of the ASCE 7-16 and allowable design loads per the 2015 Aluminum Design Manual.
2. Panels are assumed to be in portrait orientation with a maximum length of 67.5"

Max Rail Spans for SunModo SMR100 System

Table 44a	Mean Roof Height: 15 < h ≤ 30 ft Roof Angle: 20 < θ ≤ 27 degrees Exposure Category: C	Panel Orientation: Portrait North/South Support γ_E = 1 Roof Type : Hip

Roof Wind Zone	Ground Snow Load (psf)	Wind Speed (mph)												
		90	95	100	105	110	115	120	130	140	150	160	170	180
Zone 1	0	101	101	101	101	101	101	101	94	87	80	72	66	61
	10	86	86	86	86	86	86	85	82	80	78	72	66	61
	20	73	73	73	73	73	72	71	70	68	67	65	64	61
	30	62	62	62	62	62	62	62	62	61	60	58	57	56
	40	55	55	55	55	55	55	55	55	55	54	53	52	51
	50	50	50	50	50	50	50	50	50	50	50	49	49	48
	60	46	46	46	46	46	46	46	46	46	46	46	46	45
	70	43	43	43	43	43	43	43	43	43	43	43	43	43
	80	40	40	40	40	40	40	40	40	40	40	40	40	40
	90	38	38	38	38	38	38	38	38	38	38	38	38	38
Zones 2e, 2r, & 3	0	101	101	100	96	92	88	85	75	67	61	55	51	47
	10	86	86	86	86	86	86	85	75	67	61	55	51	47
	20	73	73	73	73	73	72	71	70	67	61	55	51	47
	30	62	62	62	62	62	62	62	62	61	60	55	51	47
	40	55	55	55	55	55	55	55	55	55	54	53	51	47
	50	50	50	50	50	50	50	50	50	50	50	49	49	47
	60	46	46	46	46	46	46	46	46	46	46	46	46	45
	70	43	43	43	43	43	43	43	43	43	43	43	43	43
	80	40	40	40	40	40	40	40	40	40	40	40	40	40
	90	38	38	38	38	38	38	38	38	38	38	38	38	38

Notes:

1. Tables are based on critical rail span for load combinations as specified in chapter 2 of the ASCE 7-16 and allowable design loads per the 2015 Aluminum Design Manual.
2. Panels are assumed to be in portrait orientation with a maximum length of 67.5"

Structural ENGINUITY INC
Ingenuity in Engineering

SUNMODO®

Max Rail Spans for SunModo SMR100 System

Table 44b

Mean Roof Height: 15 < h ≤ 30 ft
Roof Angle: 20 < θ ≤ 27 degrees
Exposure Category: C

Panel Orientation: Portrait
North/South Support γ_E = 1.5
Roof Type : Hip

Roof Wind Zone	Ground Snow Load (psf)	Wind Speed (mph)												
		90	95	100	105	110	115	120	130	140	150	160	170	180
Zone 1	0	101	101	99	95	91	87	83	73	65	59	54	49	46
	10	86	86	86	86	86	86	83	73	65	59	54	49	46
	20	73	73	73	73	73	72	71	70	65	59	54	49	46
	30	62	62	62	62	62	62	62	62	61	59	54	49	46
	40	55	55	55	55	55	55	55	55	55	54	53	49	46
	50	50	50	50	50	50	50	50	50	50	50	49	49	46
	60	46	46	46	46	46	46	46	46	46	46	46	46	45
	70	43	43	43	43	43	43	43	43	43	43	43	43	43
	80	40	40	40	40	40	40	40	40	40	40	40	40	40
	90	38	38	38	38	38	38	38	38	38	38	38	38	38
Zones 2e, 2r, & 3	0	92	87	82	76	71	66	62	56	50	46	42	39	37
	10	86	86	82	76	71	66	62	56	50	46	42	39	37
	20	73	73	73	73	71	66	62	56	50	46	42	39	37
	30	62	62	62	62	62	62	62	56	50	46	42	39	37
	40	55	55	55	55	55	55	55	55	50	46	42	39	37
	50	50	50	50	50	50	50	50	50	50	46	42	39	37
	60	46	46	46	46	46	46	46	46	46	46	42	39	37
	70	43	43	43	43	43	43	43	43	43	43	42	39	37
	80	40	40	40	40	40	40	40	40	40	40	40	39	37
	90	38	38	38	38	38	38	38	38	38	38	38	38	37

Notes:

1. Tables are based on critical rail span for load combinations as specified in chapter 2 of the ASCE 7-16 and allowable design loads per the 2015 Aluminum Design Manual.
2. Panels are assumed to be in portrait orientation with a maximum length of 67.5"

Structural ENGINUITY INC
Ingenuity in Engineering

SUNMODO®

Max Rail Spans for SunModo SMR100 System

Table 45a

Mean Roof Height: 15 < h ≤ 30 ft
Roof Angle: 20 < θ ≤ 27 degrees
Exposure Category: D

Panel Orientation: Portrait
North/South Support γ_E = 1
Roof Type : Hip

Roof Wind Zone	Ground Snow Load (psf)	Wind Speed (mph)												
		90	95	100	105	110	115	120	130	140	150	160	170	180
Zone 1	0	101	101	101	101	101	101	99	91	85	77	70	64	58
	10	86	86	86	86	86	85	84	82	79	77	70	64	58
	20	73	73	73	73	72	72	71	69	68	66	65	63	58
	30	62	62	62	62	62	62	62	61	60	59	58	57	55
	40	55	55	55	55	55	55	55	55	55	54	53	52	51
	50	50	50	50	50	50	50	50	50	50	50	49	48	48
	60	46	46	46	46	46	46	46	46	46	46	46	45	45
	70	43	43	43	43	43	43	43	43	43	43	43	43	42
	80	40	40	40	40	40	40	40	40	40	40	40	40	40
	90	38	38	38	38	38	38	38	38	38	38	38	38	38
Zones 2e, 2r, & 3	0	101	101	98	94	90	86	82	72	65	59	53	49	46
	10	86	86	86	86	86	85	82	72	65	59	53	49	46
	20	73	73	73	73	72	72	71	69	65	59	53	49	46
	30	62	62	62	62	62	62	62	61	60	59	53	49	46
	40	55	55	55	55	55	55	55	55	55	54	53	49	46
	50	50	50	50	50	50	50	50	50	50	50	49	48	46
	60	46	46	46	46	46	46	46	46	46	46	46	45	45
	70	43	43	43	43	43	43	43	43	43	43	43	43	42
	80	40	40	40	40	40	40	40	40	40	40	40	40	40
	90	38	38	38	38	38	38	38	38	38	38	38	38	38

Notes:

1. Tables are based on critical rail span for load combinations as specified in chapter 2 of the ASCE 7-16 and allowable design loads per the 2015 Aluminum Design Manual.
2. Panels are assumed to be in portrait orientation with a maximum length of 67.5"

Structural ENGINUITY INC
Ingenuity in Engineering

SUNMODO®

Max Rail Spans for SunModo SMR100 System

Table 45b	Mean Roof Height: 15 < h ≤ 30 ft Roof Angle: 20 < θ ≤ 27 degrees Exposure Category: D	Panel Orientation: Portrait North/South Support γ_E = 1.5 Roof Type : Hip

Roof Wind Zone	Ground Snow Load (psf)	Wind Speed (mph)												
		90	95	100	105	110	115	120	130	140	150	160	170	180
Zone 1	0	101	101	97	92	88	85	79	70	63	57	52	48	44
	10	86	86	86	86	86	85	79	70	63	57	52	48	44
	20	73	73	73	73	72	72	71	69	63	57	52	48	44
	30	62	62	62	62	62	62	62	61	60	57	52	48	44
	40	55	55	55	55	55	55	55	55	55	54	52	48	44
	50	50	50	50	50	50	50	50	50	50	50	49	48	44
	60	46	46	46	46	46	46	46	46	46	46	46	45	44
	70	43	43	43	43	43	43	43	43	43	43	43	43	42
	80	40	40	40	40	40	40	40	40	40	40	40	40	40
	90	38	38	38	38	38	38	38	38	38	38	38	38	38
Zones 2e, 2r, & 3	0	90	85	79	73	68	64	60	54	49	44	41	38	36
	10	86	85	79	73	68	64	60	54	49	44	41	38	36
	20	73	73	73	73	68	64	60	54	49	44	41	38	36
	30	62	62	62	62	62	62	60	54	49	44	41	38	36
	40	55	55	55	55	55	55	55	54	49	44	41	38	36
	50	50	50	50	50	50	50	50	50	49	44	41	38	36
	60	46	46	46	46	46	46	46	46	46	44	41	38	36
	70	43	43	43	43	43	43	43	43	43	43	41	38	36
	80	40	40	40	40	40	40	40	40	40	40	40	38	36
	90	38	38	38	38	38	38	38	38	38	38	38	38	36

Notes:

1. Tables are based on critical rail span for load combinations as specified in chapter 2 of the ASCE 7-16 and allowable design loads per the 2015 Aluminum Design Manual.
2. Panels are assumed to be in portrait orientation with a maximum length of 67.5"

Structural ENGINUITY INC
Ingenuity in Engineering

SUNMODO®

Max Rail Spans for SunModo SMR100 System

Table 46a

Mean Roof Height: 15 < h ≤ 30 ft
Roof Angle: 27 < θ ≤ 45 degrees
Exposure Category: B

Panel Orientation: Portrait
North/South Support γ_E = 1
Roof Type : Hip

Roof Wind Zone	Ground Snow Load (psf)	Wind Speed (mph)												
		90	95	100	105	110	115	120	130	140	150	160	170	180
Zone 1	0	101	101	101	101	101	101	101	101	97	91	86	82	75
	10	86	86	86	86	86	86	86	86	86	84	82	80	75
	20	75	75	75	75	75	75	75	74	73	72	71	69	68
	30	64	64	64	64	64	64	64	64	64	64	63	62	61
	40	57	57	57	57	57	57	57	57	57	57	57	57	56
	50	52	52	52	52	52	52	52	52	52	52	52	52	52
	60	48	48	48	48	48	48	48	48	48	48	48	48	48
	70	45	45	45	45	45	45	45	45	45	45	45	45	45
	80	42	42	42	42	42	42	42	42	42	42	42	42	42
	90	40	40	40	40	40	40	40	40	40	40	40	40	40
Zone 2e	0	101	101	101	101	101	101	101	101	95	89	83	76	69
	10	86	86	86	86	86	86	86	86	86	84	82	76	69
	20	75	75	75	75	75	75	75	74	73	72	71	69	68
	30	64	64	64	64	64	64	64	64	64	64	63	62	61
	40	57	57	57	57	57	57	57	57	57	57	57	57	56
	50	52	52	52	52	52	52	52	52	52	52	52	52	52
	60	48	48	48	48	48	48	48	48	48	48	48	48	48
	70	45	45	45	45	45	45	45	45	45	45	45	45	45
	80	42	42	42	42	42	42	42	42	42	42	42	42	42
	90	40	40	40	40	40	40	40	40	40	40	40	40	40
Zone 2r	0	101	101	101	101	101	99	95	88	82	74	66	60	55
	10	86	86	86	86	86	86	86	86	82	74	66	60	55
	20	75	75	75	75	75	75	75	74	73	72	66	60	55
	30	64	64	64	64	64	64	64	64	64	64	63	60	55
	40	57	57	57	57	57	57	57	57	57	57	57	57	55
	50	52	52	52	52	52	52	52	52	52	52	52	52	52
	60	48	48	48	48	48	48	48	48	48	48	48	48	48
	70	45	45	45	45	45	45	45	45	45	45	45	45	45
	80	42	42	42	42	42	42	42	42	42	42	42	42	42
	90	40	40	40	40	40	40	40	40	40	40	40	40	40
Zone 3	0	101	101	101	101	101	101	98	90	84	75	66	59	54
	10	86	86	86	86	86	86	86	86	84	75	66	59	54
	20	75	75	75	75	75	75	75	74	73	72	66	59	54
	30	64	64	64	64	64	64	64	64	64	64	63	59	54
	40	57	57	57	57	57	57	57	57	57	57	57	57	54
	50	52	52	52	52	52	52	52	52	52	52	52	52	52
	60	48	48	48	48	48	48	48	48	48	48	48	48	48
	70	45	45	45	45	45	45	45	45	45	45	45	45	45
	80	42	42	42	42	42	42	42	42	42	42	42	42	42
	90	40	40	40	40	40	40	40	40	40	40	40	40	40

Notes:

1. Tables are based on critical rail span for load combinations as specified in chapter 2 of the ASCE 7-16 and allowable design loads per the 2015 Aluminum Design Manual.
2. Panels are assumed to be in portrait orientation with a maximum length of 67.5"

Structural ENGINUITY INC
Ingenuity in Engineering

SUNMODO®

Max Rail Spans for SunModo SMR100 System

Table 46b

Mean Roof Height: 15 < h ≤ 30 ft
Roof Angle: 27 < θ ≤ 45 degrees
Exposure Category: B

Panel Orientation: Portrait
North/South Support γ_E = 1.5
Roof Type : Hip

Roof Wind Zone	Ground Snow Load (psf)	Wind Speed (mph)												
		90	95	100	105	110	115	120	130	140	150	160	170	180
Zone 1	0	101	101	101	101	100	96	93	86	81	72	65	60	55
	10	86	86	86	86	86	86	86	86	81	72	65	60	55
	20	75	75	75	75	75	75	75	74	73	72	65	60	55
	30	64	64	64	64	64	64	64	64	64	64	63	60	55
	40	57	57	57	57	57	57	57	57	57	57	57	57	55
	50	52	52	52	52	52	52	52	52	52	52	52	52	52
	60	48	48	48	48	48	48	48	48	48	48	48	48	48
	70	45	45	45	45	45	45	45	45	45	45	45	45	45
	80	42	42	42	42	42	42	42	42	42	42	42	42	42
	90	40	40	40	40	40	40	40	40	40	40	40	40	40
Zone 2e	0	101	101	101	101	99	95	91	84	75	66	59	53	49
	10	86	86	86	86	86	86	86	84	75	66	59	53	49
	20	75	75	75	75	75	75	75	74	73	66	59	53	49
	30	64	64	64	64	64	64	64	64	64	64	59	53	49
	40	57	57	57	57	57	57	57	57	57	57	57	53	49
	50	52	52	52	52	52	52	52	52	52	52	52	52	49
	60	48	48	48	48	48	48	48	48	48	48	48	48	48
	70	45	45	45	45	45	45	45	45	45	45	45	45	45
	80	42	42	42	42	42	42	42	42	42	42	42	42	42
	90	40	40	40	40	40	40	40	40	40	40	40	40	40
Zone 2r	0	101	98	93	89	85	82	77	67	60	54	49	45	41
	10	86	86	86	86	85	82	77	67	60	54	49	45	41
	20	75	75	75	75	75	75	75	67	60	54	49	45	41
	30	64	64	64	64	64	64	64	64	60	54	49	45	41
	40	57	57	57	57	57	57	57	57	57	54	49	45	41
	50	52	52	52	52	52	52	52	52	52	52	49	45	41
	60	48	48	48	48	48	48	48	48	48	48	48	45	41
	70	45	45	45	45	45	45	45	45	45	45	45	45	41
	80	42	42	42	42	42	42	42	42	42	42	42	42	41
	90	40	40	40	40	40	40	40	40	40	40	40	40	40
Zone 3	0	101	101	96	91	87	83	78	67	58	52	47	42	39
	10	86	86	86	86	86	83	78	67	58	52	47	42	39
	20	75	75	75	75	75	75	75	67	58	52	47	42	39
	30	64	64	64	64	64	64	64	64	58	52	47	42	39
	40	57	57	57	57	57	57	57	57	57	52	47	42	39
	50	52	52	52	52	52	52	52	52	52	52	47	42	39
	60	48	48	48	48	48	48	48	48	48	48	47	42	39
	70	45	45	45	45	45	45	45	45	45	45	45	42	39
	80	42	42	42	42	42	42	42	42	42	42	42	42	39
	90	40	40	40	40	40	40	40	40	40	40	40	40	39

Notes:

1. Tables are based on critical rail span for load combinations as specified in chapter 2 of the ASCE 7-16 and allowable design loads per the 2015 Aluminum Design Manual.
2. Panels are assumed to be in portrait orientation with a maximum length of 67.5"

Structural ENGINUITY INC
Ingenuity in Engineering

SUNMODO®

Max Rail Spans for SunModo SMR100 System

Table 47a

Mean Roof Height: 15 < h ≤ 30 ft
Roof Angle: 27 < θ ≤ 45 degrees
Exposure Category: C

Panel Orientation: Portrait
North/South Support γ_E = 1
Roof Type : Hip

Roof Wind Zone	Ground Snow Load (psf)	Wind Speed (mph)												
		90	95	100	105	110	115	120	130	140	150	160	170	180
Zone 1	0	101	101	101	101	101	99	96	89	83	76	69	63	58
	10	86	86	86	86	86	86	85	83	81	76	69	63	58
	20	75	75	75	75	74	74	73	71	70	68	67	63	58
	30	64	64	64	64	64	64	64	64	62	61	60	59	58
	40	57	57	57	57	57	57	57	57	57	56	55	54	53
	50	52	52	52	52	52	52	52	52	52	52	51	51	50
	60	48	48	48	48	48	48	48	48	48	48	48	48	47
	70	45	45	45	45	45	45	45	45	45	45	45	45	44
	80	42	42	42	42	42	42	42	42	42	42	42	42	42
	90	40	40	40	40	40	40	40	40	40	40	40	40	40
Zone 2e	0	101	101	101	101	101	98	94	87	80	70	63	57	52
	10	86	86	86	86	86	86	85	83	80	70	63	57	52
	20	75	75	75	75	74	74	73	71	70	68	63	57	52
	30	64	64	64	64	64	64	64	64	62	61	60	57	52
	40	57	57	57	57	57	57	57	57	57	56	55	54	52
	50	52	52	52	52	52	52	52	52	52	52	51	51	50
	60	48	48	48	48	48	48	48	48	48	48	48	48	47
	70	45	45	45	45	45	45	45	45	45	45	45	45	44
	80	42	42	42	42	42	42	42	42	42	42	42	42	42
	90	40	40	40	40	40	40	40	40	40	40	40	40	40
Zone 2r	0	101	101	96	92	88	84	81	71	63	56	51	47	43
	10	86	86	86	86	86	84	81	71	63	56	51	47	43
	20	75	75	75	75	74	74	73	71	63	56	51	47	43
	30	64	64	64	64	64	64	64	64	62	56	51	47	43
	40	57	57	57	57	57	57	57	57	57	56	51	47	43
	50	52	52	52	52	52	52	52	52	52	52	51	47	43
	60	48	48	48	48	48	48	48	48	48	48	48	47	43
	70	45	45	45	45	45	45	45	45	45	45	45	45	43
	80	42	42	42	42	42	42	42	42	42	42	42	42	42
	90	40	40	40	40	40	40	40	40	40	40	40	40	40
Zone 3	0	101	101	100	94	90	86	82	71	62	55	49	45	41
	10	86	86	86	86	86	86	82	71	62	55	49	45	41
	20	75	75	75	75	74	74	73	71	62	55	49	45	41
	30	64	64	64	64	64	64	64	64	62	55	49	45	41
	40	57	57	57	57	57	57	57	57	57	55	49	45	41
	50	52	52	52	52	52	52	52	52	52	52	49	45	41
	60	48	48	48	48	48	48	48	48	48	48	48	45	41
	70	45	45	45	45	45	45	45	45	45	45	45	45	41
	80	42	42	42	42	42	42	42	42	42	42	42	42	41
	90	40	40	40	40	40	40	40	40	40	40	40	40	40

Notes:

1. Tables are based on critical rail span for load combinations as specified in chapter 2 of the ASCE 7-16 and allowable design loads per the 2015 Aluminum Design Manual.
2. Panels are assumed to be in portrait orientation with a maximum length of 67.5"

Structural ENGINUITY INC
Ingenuity in Engineering

SUNMODO®

Max Rail Spans for SunModo SMR100 System

Table 47b

Mean Roof Height: 15 < h ≤ 30 ft
Roof Angle: 27 < θ ≤ 45 degrees
Exposure Category: C

Panel Orientation: Portrait
North/South Support γ_E = 1.5
Roof Type : Hip

Roof Wind Zone	Ground Snow Load (psf)	Wind Speed (mph)												
		90	95	100	105	110	115	120	130	140	150	160	170	180
Zone 1	0	101	98	94	90	86	83	79	69	62	56	51	47	43
	10	86	86	86	86	86	83	79	69	62	56	51	47	43
	20	75	75	75	75	74	74	73	69	62	56	51	47	43
	30	64	64	64	64	64	64	64	64	62	56	51	47	43
	40	57	57	57	57	57	57	57	57	57	56	51	47	43
	50	52	52	52	52	52	52	52	52	52	52	51	47	43
	60	48	48	48	48	48	48	48	48	48	48	48	47	43
	70	45	45	45	45	45	45	45	45	45	45	45	45	43
	80	42	42	42	42	42	42	42	42	42	42	42	42	42
	90	40	40	40	40	40	40	40	40	40	40	40	40	40
Zone 2e	0	101	97	92	88	84	79	73	63	56	50	45	41	38
	10	86	86	86	86	84	79	73	63	56	50	45	41	38
	20	75	75	75	75	74	74	73	63	56	50	45	41	38
	30	64	64	64	64	64	64	64	63	56	50	45	41	38
	40	57	57	57	57	57	57	57	57	56	50	45	41	38
	50	52	52	52	52	52	52	52	52	52	50	45	41	38
	60	48	48	48	48	48	48	48	48	48	48	45	41	38
	70	45	45	45	45	45	45	45	45	45	45	45	41	38
	80	42	42	42	42	42	42	42	42	42	42	42	41	38
	90	40	40	40	40	40	40	40	40	40	40	40	40	38
Zone 2r	0	88	84	79	72	67	62	58	52	46	42	39	36	34
	10	86	84	79	72	67	62	58	52	46	42	39	36	34
	20	75	75	75	72	67	62	58	52	46	42	39	36	34
	30	64	64	64	64	64	62	58	52	46	42	39	36	34
	40	57	57	57	57	57	57	57	52	46	42	39	36	34
	50	52	52	52	52	52	52	52	52	46	42	39	36	34
	60	48	48	48	48	48	48	48	48	46	42	39	36	34
	70	45	45	45	45	45	45	45	45	45	42	39	36	34
	80	42	42	42	42	42	42	42	42	42	42	39	36	34
	90	40	40	40	40	40	40	40	40	40	40	39	36	34
Zone 3	0	90	85	80	73	66	61	57	50	44	40	37	34	32
	10	86	85	80	73	66	61	57	50	44	40	37	34	32
	20	75	75	75	73	66	61	57	50	44	40	37	34	32
	30	64	64	64	64	64	61	57	50	44	40	37	34	32
	40	57	57	57	57	57	57	57	50	44	40	37	34	32
	50	52	52	52	52	52	52	52	50	44	40	37	34	32
	60	48	48	48	48	48	48	48	48	44	40	37	34	32
	70	45	45	45	45	45	45	45	45	44	40	37	34	32
	80	42	42	42	42	42	42	42	42	42	40	37	34	32
	90	40	40	40	40	40	40	40	40	40	40	37	34	32

Notes:

1. Tables are based on critical rail span for load combinations as specified in chapter 2 of the ASCE 7-16 and allowable design loads per the 2015 Aluminum Design Manual.
2. Panels are assumed to be in portrait orientation with a maximum length of 67.5"

Structural ENGINUITY INC
Ingenuity in Engineering

SUNMODO®

Max Rail Spans for SunModo SMR100 System

Table 48a

Mean Roof Height: 15 < h ≤ 30 ft
Roof Angle: 27 < θ ≤ 45 degrees
Exposure Category: D

Panel Orientation: Portrait
North/South Support γ_E = 1
Roof Type : Hip

Roof Wind Zone	Ground Snow Load (psf)	Wind Speed (mph)												
		90	95	100	105	110	115	120	130	140	150	160	170	180
Zone 1	0	101	101	101	100	96	92	89	83	74	67	61	56	51
	10	86	86	86	86	85	84	83	81	74	67	61	56	51
	20	75	75	74	74	73	72	71	70	68	66	61	56	51
	30	64	64	64	64	64	64	64	62	61	60	58	56	51
	40	57	57	57	57	57	57	57	57	56	55	54	53	51
	50	52	52	52	52	52	52	52	52	52	51	50	49	48
	60	48	48	48	48	48	48	48	48	48	48	47	46	46
	70	45	45	45	45	45	45	45	45	45	45	45	44	43
	80	42	42	42	42	42	42	42	42	42	42	42	42	41
	90	40	40	40	40	40	40	40	40	40	40	40	40	40
Zone 2e	0	101	101	101	99	94	90	86	79	68	61	54	49	45
	10	86	86	86	86	85	84	83	79	68	61	54	49	45
	20	75	75	74	74	73	72	71	70	68	61	54	49	45
	30	64	64	64	64	64	64	64	62	61	60	54	49	45
	40	57	57	57	57	57	57	57	57	56	55	54	49	45
	50	52	52	52	52	52	52	52	52	52	51	50	49	45
	60	48	48	48	48	48	48	48	48	48	48	47	46	45
	70	45	45	45	45	45	45	45	45	45	45	45	44	43
	80	42	42	42	42	42	42	42	42	42	42	42	42	41
	90	40	40	40	40	40	40	40	40	40	40	40	40	40
Zone 2r	0	98	93	89	85	81	76	70	62	55	50	45	42	39
	10	86	86	86	85	81	76	70	62	55	50	45	42	39
	20	75	75	74	74	73	72	70	62	55	50	45	42	39
	30	64	64	64	64	64	64	64	62	55	50	45	42	39
	40	57	57	57	57	57	57	57	57	55	50	45	42	39
	50	52	52	52	52	52	52	52	52	52	50	45	42	39
	60	48	48	48	48	48	48	48	48	48	48	45	42	39
	70	45	45	45	45	45	45	45	45	45	45	45	42	39
	80	42	42	42	42	42	42	42	42	42	42	42	42	39
	90	40	40	40	40	40	40	40	40	40	40	40	40	39
Zone 3	0	101	96	91	87	83	77	70	61	53	48	43	40	37
	10	86	86	86	86	83	77	70	61	53	48	43	40	37
	20	75	75	74	74	73	72	70	61	53	48	43	40	37
	30	64	64	64	64	64	64	64	61	53	48	43	40	37
	40	57	57	57	57	57	57	57	57	53	48	43	40	37
	50	52	52	52	52	52	52	52	52	52	48	43	40	37
	60	48	48	48	48	48	48	48	48	48	48	43	40	37
	70	45	45	45	45	45	45	45	45	45	45	43	40	37
	80	42	42	42	42	42	42	42	42	42	42	42	40	37
	90	40	40	40	40	40	40	40	40	40	40	40	40	37

Notes:

1. Tables are based on critical rail span for load combinations as specified in chapter 2 of the ASCE 7-16 and allowable design loads per the 2015 Aluminum Design Manual.
2. Panels are assumed to be in portrait orientation with a maximum length of 67.5"

Structural ENGINUITY INC
Ingenuity in Engineering

SUNMODO®

Max Rail Spans for SunModo SMR100 System

Table 48b

Mean Roof Height: 15 < h ≤ 30 ft
Roof Angle: 27 < θ ≤ 45 degrees
Exposure Category: D

Panel Orientation: Portrait
North/South Support γ_E = 1.5
Roof Type : Hip

Roof Wind Zone	Ground Snow Load (psf)	Wind Speed (mph)												
		90	95	100	105	110	115	120	130	140	150	160	170	180
Zone 1	0	96	91	87	83	79	74	69	61	55	50	46	42	39
	10	86	86	86	83	79	74	69	61	55	50	46	42	39
	20	75	75	74	74	73	72	69	61	55	50	46	42	39
	30	64	64	64	64	64	64	64	61	55	50	46	42	39
	40	57	57	57	57	57	57	57	57	55	50	46	42	39
	50	52	52	52	52	52	52	52	52	52	50	46	42	39
	60	48	48	48	48	48	48	48	48	48	48	46	42	39
	70	45	45	45	45	45	45	45	45	45	45	45	42	39
	80	42	42	42	42	42	42	42	42	42	42	42	42	39
	90	40	40	40	40	40	40	40	40	40	40	40	40	39
Zone 2e	0	94	89	85	80	73	68	63	55	49	44	40	37	35
	10	86	86	85	80	73	68	63	55	49	44	40	37	35
	20	75	75	74	74	73	68	63	55	49	44	40	37	35
	30	64	64	64	64	64	64	63	55	49	44	40	37	35
	40	57	57	57	57	57	57	57	55	49	44	40	37	35
	50	52	52	52	52	52	52	52	52	49	44	40	37	35
	60	48	48	48	48	48	48	48	48	48	44	40	37	35
	70	45	45	45	45	45	45	45	45	45	44	40	37	35
	80	42	42	42	42	42	42	42	42	42	42	40	37	35
	90	40	40	40	40	40	40	40	40	40	40	40	37	35
Zone 2r	0	81	74	68	63	58	55	51	46	41	38	35	33	30
	10	81	74	68	63	58	55	51	46	41	38	35	33	30
	20	75	74	68	63	58	55	51	46	41	38	35	33	30
	30	64	64	64	63	58	55	51	46	41	38	35	33	30
	40	57	57	57	57	57	55	51	46	41	38	35	33	30
	50	52	52	52	52	52	52	51	46	41	38	35	33	30
	60	48	48	48	48	48	48	48	46	41	38	35	33	30
	70	45	45	45	45	45	45	45	45	41	38	35	33	30
	80	42	42	42	42	42	42	42	42	41	38	35	33	30
	90	40	40	40	40	40	40	40	40	40	38	35	33	30
Zone 3	0	82	75	68	62	57	53	49	43	39	36	33	31	28
	10	82	75	68	62	57	53	49	43	39	36	33	31	28
	20	75	75	68	62	57	53	49	43	39	36	33	31	28
	30	64	64	64	62	57	53	49	43	39	36	33	31	28
	40	57	57	57	57	57	53	49	43	39	36	33	31	28
	50	52	52	52	52	52	52	49	43	39	36	33	31	28
	60	48	48	48	48	48	48	48	43	39	36	33	31	28
	70	45	45	45	45	45	45	45	43	39	36	33	31	28
	80	42	42	42	42	42	42	42	42	39	36	33	31	28
	90	40	40	40	40	40	40	40	40	39	36	33	31	28

Notes:

1. Tables are based on critical rail span for load combinations as specified in chapter 2 of the ASCE 7-16 and allowable design loads per the 2015 Aluminum Design Manual.
2. Panels are assumed to be in portrait orientation with a maximum length of 67.5"

Structural ENGINUITY INC
Ingenuity in Engineering

SUNMODO®

Max Rail Spans for SunModo SMR100 System

Table 49a

Mean Roof Height: h ≤ 15 ft
Roof Angle: 0 < θ ≤ 7 degrees
Exposure Category: B

Panel Orientation: Portrait
North/South Support γ_E = 1
Roof Type : Gable

Roof Wind Zone	Ground Snow Load (psf)	Wind Speed (mph)												
		90	95	100	105	110	115	120	130	140	150	160	170	180
Zone 1'	0	94	94	94	94	94	94	94	94	94	94	94	94	94
	10	79	79	79	79	79	79	79	79	79	79	79	79	79
	20	63	63	63	63	63	63	63	63	63	63	63	63	63
	30	61	61	61	61	61	61	61	61	61	61	61	61	61
	40	54	54	54	54	54	54	54	54	54	54	54	54	54
	50	49	49	49	49	49	49	49	49	49	49	49	49	49
	60	45	45	45	45	45	45	45	45	45	45	45	45	45
	70	42	42	42	42	42	42	42	42	42	42	42	42	42
	80	39	39	39	39	39	39	39	39	39	39	39	39	39
	90	37	37	37	37	37	37	37	37	37	37	37	37	37
Zone 1	0	94	94	94	94	94	94	94	94	94	89	81	74	68
	10	79	79	79	79	79	79	79	79	79	79	79	74	68
	20	63	63	63	63	63	63	63	63	63	63	63	63	63
	30	61	61	61	61	61	61	61	61	61	61	61	61	61
	40	54	54	54	54	54	54	54	54	54	54	54	54	54
	50	49	49	49	49	49	49	49	49	49	49	49	49	49
	60	45	45	45	45	45	45	45	45	45	45	45	45	45
	70	42	42	42	42	42	42	42	42	42	42	42	42	42
	80	39	39	39	39	39	39	39	39	39	39	39	39	39
	90	37	37	37	37	37	37	37	37	37	37	37	37	37
Zone 2	0	94	94	94	94	94	94	94	88	79	71	65	60	56
	10	79	79	79	79	79	79	79	79	79	71	65	60	56
	20	63	63	63	63	63	63	63	63	63	63	63	60	56
	30	61	61	61	61	61	61	61	61	61	61	61	60	56
	40	54	54	54	54	54	54	54	54	54	54	54	54	54
	50	49	49	49	49	49	49	49	49	49	49	49	49	49
	60	45	45	45	45	45	45	45	45	45	45	45	45	45
	70	42	42	42	42	42	42	42	42	42	42	42	42	42
	80	39	39	39	39	39	39	39	39	39	39	39	39	39
	90	37	37	37	37	37	37	37	37	37	37	37	37	37
Zone 3	0	94	94	94	94	91	85	80	71	64	58	53	49	45
	10	79	79	79	79	79	79	79	71	64	58	53	49	45
	20	63	63	63	63	63	63	63	63	63	58	53	49	45
	30	61	61	61	61	61	61	61	61	61	58	53	49	45
	40	54	54	54	54	54	54	54	54	54	54	53	49	45
	50	49	49	49	49	49	49	49	49	49	49	49	49	45
	60	45	45	45	45	45	45	45	45	45	45	45	45	45
	70	42	42	42	42	42	42	42	42	42	42	42	42	42
	80	39	39	39	39	39	39	39	39	39	39	39	39	39
	90	37	37	37	37	37	37	37	37	37	37	37	37	37

Notes:

1. Tables are based on critical rail span for load combinations as specified in chapter 2 of the ASCE 7-16 and allowable design loads per the 2015 Aluminum Design Manual.
2. Panels are assumed to be in portrait orientation with a maximum length of 82"

Structural ENGINUITY INC
Ingenuity in Engineering

SUNMODO®

Max Rail Spans for SunModo SMR100 System

Table 49b

Mean Roof Height: h ≤ 15 ft
Roof Angle: 0 < θ ≤ 7 degrees
Exposure Category: B

Panel Orientation: Portrait
North/South Support γ_E = 1.5
Roof Type : Gable

Roof Wind Zone	Ground Snow Load (psf)	Wind Speed (mph)												
		90	95	100	105	110	115	120	130	140	150	160	170	180
Zone 1'	0	94	94	94	94	94	94	94	94	94	94	89	82	76
	10	79	79	79	79	79	79	79	79	79	79	79	79	76
	20	63	63	63	63	63	63	63	63	63	63	63	63	63
	30	61	61	61	61	61	61	61	61	61	61	61	61	61
	40	54	54	54	54	54	54	54	54	54	54	54	54	54
	50	49	49	49	49	49	49	49	49	49	49	49	49	49
	60	45	45	45	45	45	45	45	45	45	45	45	45	45
	70	42	42	42	42	42	42	42	42	42	42	42	42	42
	80	39	39	39	39	39	39	39	39	39	39	39	39	39
	90	37	37	37	37	37	37	37	37	37	37	37	37	37
Zone 1	0	94	94	94	94	94	94	92	82	73	67	61	56	52
	10	79	79	79	79	79	79	79	79	73	67	61	56	52
	20	63	63	63	63	63	63	63	63	63	63	61	56	52
	30	61	61	61	61	61	61	61	61	61	61	61	56	52
	40	54	54	54	54	54	54	54	54	54	54	54	54	52
	50	49	49	49	49	49	49	49	49	49	49	49	49	49
	60	45	45	45	45	45	45	45	45	45	45	45	45	45
	70	42	42	42	42	42	42	42	42	42	42	42	42	42
	80	39	39	39	39	39	39	39	39	39	39	39	39	39
	90	37	37	37	37	37	37	37	37	37	37	37	37	37
Zone 2	0	94	94	94	89	83	78	73	66	59	54	50	46	43
	10	79	79	79	79	79	78	73	66	59	54	50	46	43
	20	63	63	63	63	63	63	63	63	59	54	50	46	43
	30	61	61	61	61	61	61	61	61	59	54	50	46	43
	40	54	54	54	54	54	54	54	54	54	54	50	46	43
	50	49	49	49	49	49	49	49	49	49	49	49	46	43
	60	45	45	45	45	45	45	45	45	45	45	45	45	43
	70	42	42	42	42	42	42	42	42	42	42	42	42	42
	80	39	39	39	39	39	39	39	39	39	39	39	39	39
	90	37	37	37	37	37	37	37	37	37	37	37	37	37
Zone 3	0	91	84	77	72	67	63	59	53	48	44	40	37	35
	10	79	79	77	72	67	63	59	53	48	44	40	37	35
	20	63	63	63	63	63	63	59	53	48	44	40	37	35
	30	61	61	61	61	61	61	59	53	48	44	40	37	35
	40	54	54	54	54	54	54	54	53	48	44	40	37	35
	50	49	49	49	49	49	49	49	49	48	44	40	37	35
	60	45	45	45	45	45	45	45	45	45	44	40	37	35
	70	42	42	42	42	42	42	42	42	42	42	40	37	35
	80	39	39	39	39	39	39	39	39	39	39	39	37	35
	90	37	37	37	37	37	37	37	37	37	37	37	37	35

Notes:

1. Tables are based on critical rail span for load combinations as specified in chapter 2 of the ASCE 7-16 and allowable design loads per the 2015 Aluminum Design Manual.
2. Panels are assumed to be in portrait orientation with a maximum length of 82"

Structural ENGINUITY INC
Ingenuity in Engineering

SUNMODO®

Max Rail Spans for SunModo SMR100 System

Table 50a

Mean Roof Height: h ≤ 15 ft
Roof Angle: 0 < θ ≤ 7 degrees
Exposure Category: C

Panel Orientation: Portrait
North/South Support γ_E = 1
Roof Type : Gable

Roof Wind Zone	Ground Snow Load (psf)	Wind Speed (mph)												
		90	95	100	105	110	115	120	130	140	150	160	170	180
Zone 1'	0	94	94	94	94	94	94	94	94	94	94	89	82	76
	10	79	79	79	79	79	79	79	79	79	79	79	79	76
	20	63	63	63	63	63	63	63	63	63	63	63	63	63
	30	61	61	61	61	61	61	61	61	61	61	61	61	61
	40	54	54	54	54	54	54	54	54	54	54	54	54	54
	50	49	49	49	49	49	49	49	49	49	49	49	49	49
	60	45	45	45	45	45	45	45	45	45	45	45	45	45
	70	42	42	42	42	42	42	42	42	42	42	42	42	42
	80	39	39	39	39	39	39	39	39	39	39	39	39	39
	90	37	37	37	37	37	37	37	37	37	37	37	37	37
Zone 1	0	94	94	94	94	94	94	92	82	74	67	61	56	52
	10	79	79	79	79	79	79	79	79	74	67	61	56	52
	20	63	63	63	63	63	63	63	63	63	63	61	56	52
	30	61	61	61	61	61	61	61	61	61	61	61	56	52
	40	54	54	54	54	54	54	54	54	54	54	54	54	52
	50	49	49	49	49	49	49	49	49	49	49	49	49	49
	60	45	45	45	45	45	45	45	45	45	45	45	45	45
	70	42	42	42	42	42	42	42	42	42	42	42	42	42
	80	39	39	39	39	39	39	39	39	39	39	39	39	39
	90	37	37	37	37	37	37	37	37	37	37	37	37	37
Zone 2	0	94	94	94	90	84	78	74	66	60	54	50	46	43
	10	79	79	79	79	79	78	74	66	60	54	50	46	43
	20	63	63	63	63	63	63	63	63	60	54	50	46	43
	30	61	61	61	61	61	61	61	61	60	54	50	46	43
	40	54	54	54	54	54	54	54	54	54	54	50	46	43
	50	49	49	49	49	49	49	49	49	49	49	49	46	43
	60	45	45	45	45	45	45	45	45	45	45	45	45	43
	70	42	42	42	42	42	42	42	42	42	42	42	42	42
	80	39	39	39	39	39	39	39	39	39	39	39	39	39
	90	37	37	37	37	37	37	37	37	37	37	37	37	37
Zone 3	0	91	84	78	72	68	63	60	54	48	44	41	38	35
	10	79	79	78	72	68	63	60	54	48	44	41	38	35
	20	63	63	63	63	63	63	60	54	48	44	41	38	35
	30	61	61	61	61	61	61	60	54	48	44	41	38	35
	40	54	54	54	54	54	54	54	54	48	44	41	38	35
	50	49	49	49	49	49	49	49	49	48	44	41	38	35
	60	45	45	45	45	45	45	45	45	45	44	41	38	35
	70	42	42	42	42	42	42	42	42	42	42	41	38	35
	80	39	39	39	39	39	39	39	39	39	39	39	38	35
	90	37	37	37	37	37	37	37	37	37	37	37	37	35

Notes:

1. Tables are based on critical rail span for load combinations as specified in chapter 2 of the ASCE 7-16 and allowable design loads per the 2015 Aluminum Design Manual.
2. Panels are assumed to be in portrait orientation with a maximum length of 82"

Structural ENGINUITY INC
Ingenuity in Engineering

SUNMODO®

Max Rail Spans for SunModo SMR100 System

Table 50b

Mean Roof Height: h ≤ 15 ft
Roof Angle: 0 < θ ≤ 7 degrees
Exposure Category: C

Panel Orientation: Portrait
North/South Support γ_E = 1.5
Roof Type : Gable

Roof Wind Zone	Ground Snow Load (psf)	Wind Speed (mph)												
		90	95	100	105	110	115	120	130	140	150	160	170	180
Zone 1'	0	94	94	94	94	94	94	94	90	81	74	68	63	59
	10	79	79	79	79	79	79	79	79	79	74	68	63	59
	20	63	63	63	63	63	63	63	63	63	63	63	63	59
	30	61	61	61	61	61	61	61	61	61	61	61	61	59
	40	54	54	54	54	54	54	54	54	54	54	54	54	54
	50	49	49	49	49	49	49	49	49	49	49	49	49	49
	60	45	45	45	45	45	45	45	45	45	45	45	45	45
	70	42	42	42	42	42	42	42	42	42	42	42	42	42
	80	39	39	39	39	39	39	39	39	39	39	39	39	39
	90	37	37	37	37	37	37	37	37	37	37	37	37	37
Zone 1	0	94	94	90	83	78	73	69	62	56	51	47	43	40
	10	79	79	79	79	78	73	69	62	56	51	47	43	40
	20	63	63	63	63	63	63	63	62	56	51	47	43	40
	30	61	61	61	61	61	61	61	61	56	51	47	43	40
	40	54	54	54	54	54	54	54	54	54	51	47	43	40
	50	49	49	49	49	49	49	49	49	49	49	47	43	40
	60	45	45	45	45	45	45	45	45	45	45	45	43	40
	70	42	42	42	42	42	42	42	42	42	42	42	42	40
	80	39	39	39	39	39	39	39	39	39	39	39	39	39
	90	37	37	37	37	37	37	37	37	37	37	37	37	37
Zone 2	0	83	77	72	67	63	59	56	50	46	42	39	36	34
	10	79	77	72	67	63	59	56	50	46	42	39	36	34
	20	63	63	63	63	63	59	56	50	46	42	39	36	34
	30	61	61	61	61	61	59	56	50	46	42	39	36	34
	40	54	54	54	54	54	54	54	50	46	42	39	36	34
	50	49	49	49	49	49	49	49	49	46	42	39	36	34
	60	45	45	45	45	45	45	45	45	45	42	39	36	34
	70	42	42	42	42	42	42	42	42	42	42	39	36	34
	80	39	39	39	39	39	39	39	39	39	39	39	36	34
	90	37	37	37	37	37	37	37	37	37	37	37	36	34
Zone 3	0	67	62	58	54	51	48	45	41	37	34	32	30	28
	10	67	62	58	54	51	48	45	41	37	34	32	30	28
	20	63	62	58	54	51	48	45	41	37	34	32	30	28
	30	61	61	58	54	51	48	45	41	37	34	32	30	28
	40	54	54	54	54	51	48	45	41	37	34	32	30	28
	50	49	49	49	49	49	48	45	41	37	34	32	30	28
	60	45	45	45	45	45	45	45	41	37	34	32	30	28
	70	42	42	42	42	42	42	42	41	37	34	32	30	28
	80	39	39	39	39	39	39	39	39	37	34	32	30	28
	90	37	37	37	37	37	37	37	37	37	34	32	30	28

Notes:

1. Tables are based on critical rail span for load combinations as specified in chapter 2 of the ASCE 7-16 and allowable design loads per the 2015 Aluminum Design Manual.
2. Panels are assumed to be in portrait orientation with a maximum length of 82"

Structural ENGINUITY INC
Ingenuity in Engineering

SUNMODO®

Max Rail Spans for SunModo SMR100 System

Table 51a

Mean Roof Height: h ≤ 15 ft
Roof Angle: 0 < θ ≤ 7 degrees
Exposure Category: D

Panel Orientation: Portrait
North/South Support γ_E = 1
Roof Type : Gable

Roof Wind Zone	Ground Snow Load (psf)	Wind Speed (mph)												
		90	95	100	105	110	115	120	130	140	150	160	170	180
Zone 1'	0	94	94	94	94	94	94	94	94	93	86	78	72	67
	10	79	79	79	79	79	79	79	79	79	79	78	72	67
	20	63	63	63	63	63	63	63	63	63	63	63	63	62
	30	61	61	61	61	61	61	61	61	61	61	61	61	61
	40	54	54	54	54	54	54	54	54	54	54	54	54	54
	50	49	49	49	49	49	49	49	49	49	49	49	49	49
	60	45	45	45	45	45	45	45	45	45	45	45	45	45
	70	42	42	42	42	42	42	42	42	42	42	42	42	42
	80	39	39	39	39	39	39	39	39	39	39	39	39	39
	90	37	37	37	37	37	37	37	37	37	37	37	37	37
Zone 1	0	94	94	94	94	91	85	80	71	64	59	54	50	46
	10	79	79	79	79	79	79	79	71	64	59	54	50	46
	20	63	63	63	63	63	63	63	63	63	59	54	50	46
	30	61	61	61	61	61	61	61	61	61	59	54	50	46
	40	54	54	54	54	54	54	54	54	54	54	54	50	46
	50	49	49	49	49	49	49	49	49	49	49	49	49	46
	60	45	45	45	45	45	45	45	45	45	45	45	45	45
	70	42	42	42	42	42	42	42	42	42	42	42	42	42
	80	39	39	39	39	39	39	39	39	39	39	39	39	39
	90	37	37	37	37	37	37	37	37	37	37	37	37	37
Zone 2	0	94	90	83	78	73	68	64	58	52	48	44	41	38
	10	79	79	79	78	73	68	64	58	52	48	44	41	38
	20	63	63	63	63	63	63	63	58	52	48	44	41	38
	30	61	61	61	61	61	61	61	58	52	48	44	41	38
	40	54	54	54	54	54	54	54	54	52	48	44	41	38
	50	49	49	49	49	49	49	49	49	49	48	44	41	38
	60	45	45	45	45	45	45	45	45	45	45	44	41	38
	70	42	42	42	42	42	42	42	42	42	42	42	41	38
	80	39	39	39	39	39	39	39	39	39	39	39	39	38
	90	37	37	37	37	37	37	37	37	37	37	37	37	37
Zone 3	0	79	73	67	63	59	55	52	47	43	39	36	33	32
	10	79	73	67	63	59	55	52	47	43	39	36	33	32
	20	63	63	63	63	59	55	52	47	43	39	36	33	32
	30	61	61	61	61	59	55	52	47	43	39	36	33	32
	40	54	54	54	54	54	54	52	47	43	39	36	33	32
	50	49	49	49	49	49	49	49	47	43	39	36	33	32
	60	45	45	45	45	45	45	45	45	43	39	36	33	32
	70	42	42	42	42	42	42	42	42	42	39	36	33	32
	80	39	39	39	39	39	39	39	39	39	39	36	33	32
	90	37	37	37	37	37	37	37	37	37	37	36	33	32

Notes:

1. Tables are based on critical rail span for load combinations as specified in chapter 2 of the ASCE 7-16 and allowable design loads per the 2015 Aluminum Design Manual.
2. Panels are assumed to be in portrait orientation with a maximum length of 82"

Structural ENGINUITY INC
Ingenuity in Engineering

SUNMODO®

Max Rail Spans for SunModo SMR100 System

Table 51b

Mean Roof Height: h ≤ 15 ft
Roof Angle: 0 < θ ≤ 7 degrees
Exposure Category: D

Panel Orientation: Portrait
North/South Support γ_E = 1.5
Roof Type : Gable

Roof Wind Zone	Ground Snow Load (psf)	Wind Speed (mph)												
		90	95	100	105	110	115	120	130	140	150	160	170	180
Zone 1'	0	94	94	94	94	94	92	88	79	72	65	60	56	52
	10	79	79	79	79	79	79	79	79	72	65	60	56	52
	20	63	63	63	63	63	63	63	63	63	63	60	56	52
	30	61	61	61	61	61	61	61	61	61	61	60	56	52
	40	54	54	54	54	54	54	54	54	54	54	54	54	52
	50	49	49	49	49	49	49	49	49	49	49	49	49	49
	60	45	45	45	45	45	45	45	45	45	45	45	45	45
	70	42	42	42	42	42	42	42	42	42	42	42	42	42
	80	39	39	39	39	39	39	39	39	39	39	39	39	39
	90	37	37	37	37	37	37	37	37	37	37	37	37	37
Zone 1	0	91	84	78	72	68	64	60	54	49	45	41	38	36
	10	79	79	78	72	68	64	60	54	49	45	41	38	36
	20	63	63	63	63	63	63	60	54	49	45	41	38	36
	30	61	61	61	61	61	61	60	54	49	45	41	38	36
	40	54	54	54	54	54	54	54	54	49	45	41	38	36
	50	49	49	49	49	49	49	49	49	49	45	41	38	36
	60	45	45	45	45	45	45	45	45	45	45	41	38	36
	70	42	42	42	42	42	42	42	42	42	42	41	38	36
	80	39	39	39	39	39	39	39	39	39	39	39	38	36
	90	37	37	37	37	37	37	37	37	37	37	37	37	36
Zone 2	0	73	67	63	59	55	52	49	44	40	37	34	32	30
	10	73	67	63	59	55	52	49	44	40	37	34	32	30
	20	63	63	63	59	55	52	49	44	40	37	34	32	30
	30	61	61	61	59	55	52	49	44	40	37	34	32	30
	40	54	54	54	54	54	52	49	44	40	37	34	32	30
	50	49	49	49	49	49	49	49	44	40	37	34	32	30
	60	45	45	45	45	45	45	45	44	40	37	34	32	30
	70	42	42	42	42	42	42	42	42	40	37	34	32	30
	80	39	39	39	39	39	39	39	39	39	37	34	32	30
	90	37	37	37	37	37	37	37	37	37	37	34	32	30
Zone 3	0	59	55	51	48	45	42	40	36	33	31	29	27	26
	10	59	55	51	48	45	42	40	36	33	31	29	27	26
	20	59	55	51	48	45	42	40	36	33	31	29	27	26
	30	59	55	51	48	45	42	40	36	33	31	29	27	26
	40	54	54	51	48	45	42	40	36	33	31	29	27	26
	50	49	49	49	48	45	42	40	36	33	31	29	27	26
	60	45	45	45	45	45	42	40	36	33	31	29	27	26
	70	42	42	42	42	42	42	40	36	33	31	29	27	26
	80	39	39	39	39	39	39	39	36	33	31	29	27	26
	90	37	37	37	37	37	37	37	36	33	31	29	27	26

Notes:

1. Tables are based on critical rail span for load combinations as specified in chapter 2 of the ASCE 7-16 and allowable design loads per the 2015 Aluminum Design Manual.
2. Panels are assumed to be in portrait orientation with a maximum length of 82"

Structural ENGINUITY INC
Ingenuity in Engineering

SUNMODO®

Max Rail Spans for SunModo SMR100 System

Table 52a

Mean Roof Height: h ≤ 15 ft
Roof Angle: 7 < θ ≤ 20 degrees
Exposure Category: B

Panel Orientation: Portrait
North/South Support γ_E = 1
Roof Type : Gable

Roof Wind Zone	Ground Snow Load (psf)	Wind Speed (mph)												
		90	95	100	105	110	115	120	130	140	150	160	170	180
Zones 1 & 2e	0	94	94	94	94	94	94	94	94	89	78	69	64	59
	10	73	73	73	73	73	73	73	73	73	73	69	64	59
	20	56	56	56	56	56	56	56	56	56	56	56	56	56
	30	56	56	56	56	56	56	56	56	56	56	56	56	56
	40	50	50	50	50	50	50	50	50	50	50	50	50	50
	50	45	45	45	45	45	45	45	45	45	45	45	45	45
	60	42	42	42	42	42	42	42	42	42	42	42	42	42
	70	39	39	39	39	39	39	39	39	39	39	39	39	39
	80	36	36	36	36	36	36	36	36	36	36	36	36	36
	90	34	34	34	34	34	34	34	34	34	34	34	34	34
Zones 2n, 2r, & 3e	0	94	94	94	94	94	93	89	79	70	63	57	52	48
	10	73	73	73	73	73	73	73	73	70	63	57	52	48
	20	56	56	56	56	56	56	56	56	56	56	56	52	48
	30	56	56	56	56	56	56	56	56	56	56	56	52	48
	40	50	50	50	50	50	50	50	50	50	50	50	50	48
	50	45	45	45	45	45	45	45	45	45	45	45	45	45
	60	42	42	42	42	42	42	42	42	42	42	42	42	42
	70	39	39	39	39	39	39	39	39	39	39	39	39	39
	80	36	36	36	36	36	36	36	36	36	36	36	36	36
	90	34	34	34	34	34	34	34	34	34	34	34	34	34
Zone 3r	0	94	94	94	94	89	84	78	68	61	55	50	46	42
	10	73	73	73	73	73	73	73	68	61	55	50	46	42
	20	56	56	56	56	56	56	56	56	56	55	50	46	42
	30	56	56	56	56	56	56	56	56	56	55	50	46	42
	40	50	50	50	50	50	50	50	50	50	50	50	46	42
	50	45	45	45	45	45	45	45	45	45	45	45	45	42
	60	42	42	42	42	42	42	42	42	42	42	42	42	42
	70	39	39	39	39	39	39	39	39	39	39	39	39	39
	80	36	36	36	36	36	36	36	36	36	36	36	36	36
	90	34	34	34	34	34	34	34	34	34	34	34	34	34

Notes:

1. Tables are based on critical rail span for load combinations as specified in chapter 2 of the ASCE 7-16 and allowable design loads per the 2015 Aluminum Design Manual.
2. Panels are assumed to be in portrait orientation with a maximum length of 82"

Structural ENGINUITY INC
Ingenuity in Engineering

SUNMODO®

Max Rail Spans for SunModo SMR100 System

Table 52b

Mean Roof Height: h ≤ 15 ft
Roof Angle: 7 < θ ≤ 20 degrees
Exposure Category: B

Panel Orientation: Portrait
North/South Support γ_E = 1.5
Roof Type : Gable

Roof Wind Zone	Ground Snow Load (psf)	Wind Speed (mph)												
		90	95	100	105	110	115	120	130	140	150	160	170	180
Zones 1 & 2e	0	94	94	94	94	93	89	82	70	63	58	53	50	46
	10	73	73	73	73	73	73	73	70	63	58	53	50	46
	20	56	56	56	56	56	56	56	56	56	56	53	50	46
	30	56	56	56	56	56	56	56	56	56	56	53	50	46
	40	50	50	50	50	50	50	50	50	50	50	50	50	46
	50	45	45	45	45	45	45	45	45	45	45	45	45	45
	60	42	42	42	42	42	42	42	42	42	42	42	42	42
	70	39	39	39	39	39	39	39	39	39	39	39	39	39
	80	36	36	36	36	36	36	36	36	36	36	36	36	36
	90	34	34	34	34	34	34	34	34	34	34	34	34	34
Zones 2n, 2r, & 3e	0	94	92	87	80	74	69	65	57	52	47	43	39	36
	10	73	73	73	73	73	69	65	57	52	47	43	39	36
	20	56	56	56	56	56	56	56	56	52	47	43	39	36
	30	56	56	56	56	56	56	56	56	52	47	43	39	36
	40	50	50	50	50	50	50	50	50	50	47	43	39	36
	50	45	45	45	45	45	45	45	45	45	45	43	39	36
	60	42	42	42	42	42	42	42	42	42	42	42	39	36
	70	39	39	39	39	39	39	39	39	39	39	39	39	36
	80	36	36	36	36	36	36	36	36	36	36	36	36	36
	90	34	34	34	34	34	34	34	34	34	34	34	34	34
Zone 3r	0	89	82	75	70	65	61	57	51	45	41	38	35	33
	10	73	73	73	70	65	61	57	51	45	41	38	35	33
	20	56	56	56	56	56	56	56	51	45	41	38	35	33
	30	56	56	56	56	56	56	56	51	45	41	38	35	33
	40	50	50	50	50	50	50	50	50	45	41	38	35	33
	50	45	45	45	45	45	45	45	45	45	41	38	35	33
	60	42	42	42	42	42	42	42	42	42	41	38	35	33
	70	39	39	39	39	39	39	39	39	39	39	38	35	33
	80	36	36	36	36	36	36	36	36	36	36	36	35	33
	90	34	34	34	34	34	34	34	34	34	34	34	34	33

Notes:

1. Tables are based on critical rail span for load combinations as specified in chapter 2 of the ASCE 7-16 and allowable design loads per the 2015 Aluminum Design Manual.
2. Panels are assumed to be in portrait orientation with a maximum length of 82"

Structural ENGINUITY INC
Ingenuity in Engineering

SUNMODO®

Max Rail Spans for SunModo SMR100 System

Table 53a

Mean Roof Height: h ≤ 15 ft
Roof Angle: 7 < θ ≤ 20 degrees
Exposure Category: C

Panel Orientation: Portrait
North/South Support γ_E = 1
Roof Type : Gable

Roof Wind Zone	Ground Snow Load (psf)	Wind Speed (mph)												
		90	95	100	105	110	115	120	130	140	150	160	170	180
Zones 1 & 2e	0	94	94	94	94	94	89	82	70	63	58	54	50	46
	10	73	73	73	73	73	73	73	70	63	58	54	50	46
	20	56	56	56	56	56	56	56	56	56	56	54	50	46
	30	56	56	56	56	56	56	56	56	56	56	54	50	46
	40	50	50	50	50	50	50	50	50	50	50	50	50	46
	50	45	45	45	45	45	45	45	45	45	45	45	45	45
	60	42	42	42	42	42	42	42	42	42	42	42	42	42
	70	39	39	39	39	39	39	39	39	39	39	39	39	39
	80	36	36	36	36	36	36	36	36	36	36	36	36	36
	90	34	34	34	34	34	34	34	34	34	34	34	34	34
Zones 2n, 2r, & 3e	0	94	92	88	81	75	70	65	58	52	47	43	40	37
	10	73	73	73	73	73	70	65	58	52	47	43	40	37
	20	56	56	56	56	56	56	56	56	52	47	43	40	37
	30	56	56	56	56	56	56	56	56	52	47	43	40	37
	40	50	50	50	50	50	50	50	50	50	47	43	40	37
	50	45	45	45	45	45	45	45	45	45	45	43	40	37
	60	42	42	42	42	42	42	42	42	42	42	42	40	37
	70	39	39	39	39	39	39	39	39	39	39	39	39	37
	80	36	36	36	36	36	36	36	36	36	36	36	36	36
	90	34	34	34	34	34	34	34	34	34	34	34	34	34
Zone 3r	0	89	83	76	70	65	61	57	51	46	41	38	35	33
	10	73	73	73	70	65	61	57	51	46	41	38	35	33
	20	56	56	56	56	56	56	56	51	46	41	38	35	33
	30	56	56	56	56	56	56	56	51	46	41	38	35	33
	40	50	50	50	50	50	50	50	50	46	41	38	35	33
	50	45	45	45	45	45	45	45	45	45	41	38	35	33
	60	42	42	42	42	42	42	42	42	42	41	38	35	33
	70	39	39	39	39	39	39	39	39	39	39	38	35	33
	80	36	36	36	36	36	36	36	36	36	36	36	35	33
	90	34	34	34	34	34	34	34	34	34	34	34	34	33

Notes:

1. Tables are based on critical rail span for load combinations as specified in chapter 2 of the ASCE 7-16 and allowable design loads per the 2015 Aluminum Design Manual.
2. Panels are assumed to be in portrait orientation with a maximum length of 82"

Structural ENGINUITY INC
Ingenuity in Engineering

SUNMODO®

Max Rail Spans for SunModo SMR100 System

Table 53b

Mean Roof Height: h ≤ 15 ft
Roof Angle: 7 < θ ≤ 20 degrees
Exposure Category: C

Panel Orientation: Portrait
North/South Support γ_E = 1.5
Roof Type : Gable

Roof Wind Zone	Ground Snow Load (psf)	Wind Speed (mph)												
		90	95	100	105	110	115	120	130	140	150	160	170	180
Zones 1 & 2e	0	93	88	79	71	67	63	60	54	49	45	42	39	36
	10	73	73	73	71	67	63	60	54	49	45	42	39	36
	20	56	56	56	56	56	56	56	54	49	45	42	39	36
	30	56	56	56	56	56	56	56	54	49	45	42	39	36
	40	50	50	50	50	50	50	50	50	49	45	42	39	36
	50	45	45	45	45	45	45	45	45	45	45	42	39	36
	60	42	42	42	42	42	42	42	42	42	42	42	39	36
	70	39	39	39	39	39	39	39	39	39	39	39	39	36
	80	36	36	36	36	36	36	36	36	36	36	36	36	36
	90	34	34	34	34	34	34	34	34	34	34	34	34	34
Zones 2n, 2r, & 3e	0	74	68	63	59	55	51	48	43	39	36	33	31	29
	10	73	68	63	59	55	51	48	43	39	36	33	31	29
	20	56	56	56	56	55	51	48	43	39	36	33	31	29
	30	56	56	56	56	55	51	48	43	39	36	33	31	29
	40	50	50	50	50	50	50	48	43	39	36	33	31	29
	50	45	45	45	45	45	45	45	43	39	36	33	31	29
	60	42	42	42	42	42	42	42	42	39	36	33	31	29
	70	39	39	39	39	39	39	39	39	39	36	33	31	29
	80	36	36	36	36	36	36	36	36	36	36	33	31	29
	90	34	34	34	34	34	34	34	34	34	34	33	31	29
Zone 3r	0	65	60	55	52	48	45	43	38	35	32	30	28	27
	10	65	60	55	52	48	45	43	38	35	32	30	28	27
	20	56	56	55	52	48	45	43	38	35	32	30	28	27
	30	56	56	55	52	48	45	43	38	35	32	30	28	27
	40	50	50	50	50	48	45	43	38	35	32	30	28	27
	50	45	45	45	45	45	45	43	38	35	32	30	28	27
	60	42	42	42	42	42	42	42	38	35	32	30	28	27
	70	39	39	39	39	39	39	39	38	35	32	30	28	27
	80	36	36	36	36	36	36	36	36	35	32	30	28	27
	90	34	34	34	34	34	34	34	34	34	32	30	28	27

Notes:

1. Tables are based on critical rail span for load combinations as specified in chapter 2 of the ASCE 7-16 and allowable design loads per the 2015 Aluminum Design Manual.
2. Panels are assumed to be in portrait orientation with a maximum length of 82"

Structural ENGINUITY INC
Ingenuity in Engineering

SUNMODO®

Max Rail Spans for SunModo SMR100 System

Table 54a

Mean Roof Height: h ≤ 15 ft
Roof Angle: 7 < θ ≤ 20 degrees
Exposure Category: D

Panel Orientation: Portrait
North/South Support γ_E = 1
Roof Type : Gable

Roof Wind Zone	Ground Snow Load (psf)	Wind Speed (mph)												
		90	95	100	105	110	115	120	130	140	150	160	170	180
Zones 1 & 2e	0	94	94	93	88	81	74	68	62	56	51	48	44	41
	10	73	73	73	73	73	73	68	62	56	51	48	44	41
	20	56	56	56	56	56	56	56	56	56	51	48	44	41
	30	56	56	56	56	56	56	56	56	56	51	48	44	41
	40	50	50	50	50	50	50	50	50	50	50	48	44	41
	50	45	45	45	45	45	45	45	45	45	45	45	44	41
	60	42	42	42	42	42	42	42	42	42	42	42	42	41
	70	39	39	39	39	39	39	39	39	39	39	39	39	39
	80	36	36	36	36	36	36	36	36	36	36	36	36	36
	90	34	34	34	34	34	34	34	34	34	34	34	34	34
Zones 2n, 2r, & 3e	0	88	81	75	69	64	60	56	50	45	41	38	35	33
	10	73	73	73	69	64	60	56	50	45	41	38	35	33
	20	56	56	56	56	56	56	56	50	45	41	38	35	33
	30	56	56	56	56	56	56	56	50	45	41	38	35	33
	40	50	50	50	50	50	50	50	50	45	41	38	35	33
	50	45	45	45	45	45	45	45	45	45	41	38	35	33
	60	42	42	42	42	42	42	42	42	42	41	38	35	33
	70	39	39	39	39	39	39	39	39	39	39	38	35	33
	80	36	36	36	36	36	36	36	36	36	36	36	35	33
	90	34	34	34	34	34	34	34	34	34	34	34	34	33
Zone 3r	0	77	70	65	60	56	53	50	44	40	36	34	32	30
	10	73	70	65	60	56	53	50	44	40	36	34	32	30
	20	56	56	56	56	56	53	50	44	40	36	34	32	30
	30	56	56	56	56	56	53	50	44	40	36	34	32	30
	40	50	50	50	50	50	50	50	44	40	36	34	32	30
	50	45	45	45	45	45	45	45	44	40	36	34	32	30
	60	42	42	42	42	42	42	42	42	40	36	34	32	30
	70	39	39	39	39	39	39	39	39	39	36	34	32	30
	80	36	36	36	36	36	36	36	36	36	36	34	32	30
	90	34	34	34	34	34	34	34	34	34	34	34	32	30

Notes:

1. Tables are based on critical rail span for load combinations as specified in chapter 2 of the ASCE 7-16 and allowable design loads per the 2015 Aluminum Design Manual.
2. Panels are assumed to be in portrait orientation with a maximum length of 82"

Structural ENGINUITY INC
Ingenuity in Engineering

SUNMODO®

Max Rail Spans for SunModo SMR100 System

Table 54b

Mean Roof Height: h ≤ 15 ft
Roof Angle: 7 < θ ≤ 20 degrees
Exposure Category: D

Panel Orientation: Portrait
North/South Support γ_E = 1.5
Roof Type : Gable

Roof Wind Zone	Ground Snow Load (psf)	Wind Speed (mph)												
		90	95	100	105	110	115	120	130	140	150	160	170	180
Zones 1 & 2e	0	80	72	67	62	59	56	53	48	44	40	37	35	33
	10	73	72	67	62	59	56	53	48	44	40	37	35	33
	20	56	56	56	56	56	56	53	48	44	40	37	35	33
	30	56	56	56	56	56	56	53	48	44	40	37	35	33
	40	50	50	50	50	50	50	50	48	44	40	37	35	33
	50	45	45	45	45	45	45	45	45	44	40	37	35	33
	60	42	42	42	42	42	42	42	42	42	40	37	35	33
	70	39	39	39	39	39	39	39	39	39	39	37	35	33
	80	36	36	36	36	36	36	36	36	36	36	36	35	33
	90	34	34	34	34	34	34	34	34	34	34	34	34	33
Zones 2n, 2r, & 3e	0	64	59	55	51	48	45	42	38	34	32	30	28	26
	10	64	59	55	51	48	45	42	38	34	32	30	28	26
	20	56	56	55	51	48	45	42	38	34	32	30	28	26
	30	56	56	55	51	48	45	42	38	34	32	30	28	26
	40	50	50	50	50	48	45	42	38	34	32	30	28	26
	50	45	45	45	45	45	45	42	38	34	32	30	28	26
	60	42	42	42	42	42	42	42	38	34	32	30	28	26
	70	39	39	39	39	39	39	39	38	34	32	30	28	26
	80	36	36	36	36	36	36	36	36	34	32	30	28	26
	90	34	34	34	34	34	34	34	34	34	32	30	28	26
Zone 3r	0	56	52	48	45	42	40	37	34	31	29	27	26	24
	10	56	52	48	45	42	40	37	34	31	29	27	26	24
	20	56	52	48	45	42	40	37	34	31	29	27	26	24
	30	56	52	48	45	42	40	37	34	31	29	27	26	24
	40	50	50	48	45	42	40	37	34	31	29	27	26	24
	50	45	45	45	45	42	40	37	34	31	29	27	26	24
	60	42	42	42	42	42	40	37	34	31	29	27	26	24
	70	39	39	39	39	39	39	37	34	31	29	27	26	24
	80	36	36	36	36	36	36	36	34	31	29	27	26	24
	90	34	34	34	34	34	34	34	34	31	29	27	26	24

Notes:

1. Tables are based on critical rail span for load combinations as specified in chapter 2 of the ASCE 7-16 and allowable design loads per the 2015 Aluminum Design Manual.
2. Panels are assumed to be in portrait orientation with a maximum length of 82"

Structural ENGINUITY INC
Ingenuity in Engineering

SUNMODO®

Max Rail Spans for SunModo SMR100 System

Table 55a

Mean Roof Height: h ≤ 15 ft
Roof Angle: 20 < θ ≤ 27 degrees
Exposure Category: B

Panel Orientation: Portrait
North/South Support γ_E = 1
Roof Type : Gable

Roof Wind Zone	Ground Snow Load (psf)	Wind Speed (mph)												
		90	95	100	105	110	115	120	130	140	150	160	170	180
Zones 1 & 2e	0	94	94	94	94	94	94	94	94	94	92	87	80	73
	10	79	79	79	79	79	79	79	79	79	79	79	78	73
	20	66	66	66	66	66	66	66	66	66	66	66	66	65
	30	56	56	56	56	56	56	56	56	56	56	56	56	56
	40	50	50	50	50	50	50	50	50	50	50	50	50	50
	50	45	45	45	45	45	45	45	45	45	45	45	45	45
	60	42	42	42	42	42	42	42	42	42	42	42	42	42
	70	39	39	39	39	39	39	39	39	39	39	39	39	39
	80	36	36	36	36	36	36	36	36	36	36	36	36	36
	90	35	35	35	35	35	35	35	35	35	35	35	35	35
Zones 2n, 2r, & 3e	0	94	94	94	94	94	94	94	89	82	73	66	60	55
	10	79	79	79	79	79	79	79	79	79	73	66	60	55
	20	66	66	66	66	66	66	66	66	66	66	66	60	55
	30	56	56	56	56	56	56	56	56	56	56	56	56	55
	40	50	50	50	50	50	50	50	50	50	50	50	50	50
	50	45	45	45	45	45	45	45	45	45	45	45	45	45
	60	42	42	42	42	42	42	42	42	42	42	42	42	42
	70	39	39	39	39	39	39	39	39	39	39	39	39	39
	80	36	36	36	36	36	36	36	36	36	36	36	36	36
	90	35	35	35	35	35	35	35	35	35	35	35	35	35
Zone 3r	0	94	94	94	94	94	94	91	85	74	66	60	54	50
	10	79	79	79	79	79	79	79	79	74	66	60	54	50
	20	66	66	66	66	66	66	66	66	66	66	60	54	50
	30	56	56	56	56	56	56	56	56	56	56	56	54	50
	40	50	50	50	50	50	50	50	50	50	50	50	50	50
	50	45	45	45	45	45	45	45	45	45	45	45	45	45
	60	42	42	42	42	42	42	42	42	42	42	42	42	42
	70	39	39	39	39	39	39	39	39	39	39	39	39	39
	80	36	36	36	36	36	36	36	36	36	36	36	36	36
	90	35	35	35	35	35	35	35	35	35	35	35	35	35

Notes:

1. Tables are based on critical rail span for load combinations as specified in chapter 2 of the ASCE 7-16 and allowable design loads per the 2015 Aluminum Design Manual.
2. Panels are assumed to be in portrait orientation with a maximum length of 82"

Structural ENGINUITY INC
Ingenuity in Engineering

SUNMODO®

Max Rail Spans for SunModo SMR100 System

Table 55b

Mean Roof Height: h ≤ 15 ft
Roof Angle: 20 < θ ≤ 27 degrees
Exposure Category: B

Panel Orientation: Portrait
North/South Support γ_E = 1.5
Roof Type : Gable

Roof Wind Zone	Ground Snow Load (psf)	Wind Speed (mph)												
		90	95	100	105	110	115	120	130	140	150	160	170	180
Zones 1 & 2e	0	94	94	94	94	94	94	94	87	79	71	65	60	56
	10	79	79	79	79	79	79	79	79	79	71	65	60	56
	20	66	66	66	66	66	66	66	66	66	66	65	60	56
	30	56	56	56	56	56	56	56	56	56	56	56	56	56
	40	50	50	50	50	50	50	50	50	50	50	50	50	50
	50	45	45	45	45	45	45	45	45	45	45	45	45	45
	60	42	42	42	42	42	42	42	42	42	42	42	42	42
	70	39	39	39	39	39	39	39	39	39	39	39	39	39
	80	36	36	36	36	36	36	36	36	36	36	36	36	36
	90	35	35	35	35	35	35	35	35	35	35	35	35	35
Zones 2n, 2r, & 3e	0	94	94	94	90	86	81	76	67	59	54	49	45	41
	10	79	79	79	79	79	79	76	67	59	54	49	45	41
	20	66	66	66	66	66	66	66	66	59	54	49	45	41
	30	56	56	56	56	56	56	56	56	56	54	49	45	41
	40	50	50	50	50	50	50	50	50	50	50	49	45	41
	50	45	45	45	45	45	45	45	45	45	45	45	45	41
	60	42	42	42	42	42	42	42	42	42	42	42	42	41
	70	39	39	39	39	39	39	39	39	39	39	39	39	39
	80	36	36	36	36	36	36	36	36	36	36	36	36	36
	90	35	35	35	35	35	35	35	35	35	35	35	35	35
Zone 3r	0	94	94	90	85	80	74	68	60	54	48	44	40	37
	10	79	79	79	79	79	74	68	60	54	48	44	40	37
	20	66	66	66	66	66	66	66	60	54	48	44	40	37
	30	56	56	56	56	56	56	56	56	54	48	44	40	37
	40	50	50	50	50	50	50	50	50	50	48	44	40	37
	50	45	45	45	45	45	45	45	45	45	45	44	40	37
	60	42	42	42	42	42	42	42	42	42	42	42	40	37
	70	39	39	39	39	39	39	39	39	39	39	39	39	37
	80	36	36	36	36	36	36	36	36	36	36	36	36	36
	90	35	35	35	35	35	35	35	35	35	35	35	35	35

Notes:

1. Tables are based on critical rail span for load combinations as specified in chapter 2 of the ASCE 7-16 and allowable design loads per the 2015 Aluminum Design Manual.
2. Panels are assumed to be in portrait orientation with a maximum length of 82"

Structural ENGINUITY INC
Ingenuity in Engineering

SUNMODO®

Max Rail Spans for SunModo SMR100 System

Table 56a

Mean Roof Height: h ≤ 15 ft
Roof Angle: 20 < θ ≤ 27 degrees
Exposure Category: C

Panel Orientation: Portrait
North/South Support γ_E = 1
Roof Type : Gable

Roof Wind Zone	Ground Snow Load (psf)	Wind Speed (mph)												
		90	95	100	105	110	115	120	130	140	150	160	170	180
Zones 1 & 2e	0	94	94	94	94	94	94	94	87	80	71	65	60	56
	10	79	79	79	79	79	79	79	79	78	71	65	60	56
	20	66	66	66	66	66	66	66	66	66	64	63	60	56
	30	56	56	56	56	56	56	56	56	56	56	56	55	55
	40	50	50	50	50	50	50	50	50	50	50	50	50	50
	50	45	45	45	45	45	45	45	45	45	45	45	45	45
	60	42	42	42	42	42	42	42	42	42	42	42	42	42
	70	39	39	39	39	39	39	39	39	39	39	39	39	39
	80	36	36	36	36	36	36	36	36	36	36	36	36	36
	90	35	35	35	35	35	35	35	35	35	35	35	35	35
Zones 2n, 2r, & 3e	0	94	94	94	90	86	82	76	67	60	54	49	45	42
	10	79	79	79	79	79	79	76	67	60	54	49	45	42
	20	66	66	66	66	66	66	66	66	60	54	49	45	42
	30	56	56	56	56	56	56	56	56	56	54	49	45	42
	40	50	50	50	50	50	50	50	50	50	50	49	45	42
	50	45	45	45	45	45	45	45	45	45	45	45	45	42
	60	42	42	42	42	42	42	42	42	42	42	42	42	42
	70	39	39	39	39	39	39	39	39	39	39	39	39	39
	80	36	36	36	36	36	36	36	36	36	36	36	36	36
	90	35	35	35	35	35	35	35	35	35	35	35	35	35
Zone 3r	0	94	94	90	86	80	74	69	60	54	48	44	40	37
	10	79	79	79	79	79	74	69	60	54	48	44	40	37
	20	66	66	66	66	66	66	66	60	54	48	44	40	37
	30	56	56	56	56	56	56	56	56	54	48	44	40	37
	40	50	50	50	50	50	50	50	50	50	48	44	40	37
	50	45	45	45	45	45	45	45	45	45	45	44	40	37
	60	42	42	42	42	42	42	42	42	42	42	42	40	37
	70	39	39	39	39	39	39	39	39	39	39	39	39	37
	80	36	36	36	36	36	36	36	36	36	36	36	36	36
	90	35	35	35	35	35	35	35	35	35	35	35	35	35

Notes:

1. Tables are based on critical rail span for load combinations as specified in chapter 2 of the ASCE 7-16 and allowable design loads per the 2015 Aluminum Design Manual.
2. Panels are assumed to be in portrait orientation with a maximum length of 82"

Structural ENGINUITY INC
Ingenuity in Engineering

SUNMODO®

Max Rail Spans for SunModo SMR100 System

Table 56b

Mean Roof Height: h ≤ 15 ft
Roof Angle: 20 < θ ≤ 27 degrees
Exposure Category: C

Panel Orientation: Portrait
North/South Support γ_E = 1.5
Roof Type : Gable

Roof Wind Zone	Ground Snow Load (psf)	Wind Speed (mph)												
		90	95	100	105	110	115	120	130	140	150	160	170	180
Zones 1 & 2e	0	94	94	92	88	84	79	74	66	60	54	50	47	43
	10	79	79	79	79	79	79	74	66	60	54	50	47	43
	20	66	66	66	66	66	66	66	66	60	54	50	47	43
	30	56	56	56	56	56	56	56	56	56	54	50	47	43
	40	50	50	50	50	50	50	50	50	50	50	50	47	43
	50	45	45	45	45	45	45	45	45	45	45	45	45	43
	60	42	42	42	42	42	42	42	42	42	42	42	42	42
	70	39	39	39	39	39	39	39	39	39	39	39	39	39
	80	36	36	36	36	36	36	36	36	36	36	36	36	36
	90	35	35	35	35	35	35	35	35	35	35	35	35	35
Zones 2n, 2r, & 3e	0	86	80	74	68	63	59	55	49	45	40	37	34	32
	10	79	79	74	68	63	59	55	49	45	40	37	34	32
	20	66	66	66	66	63	59	55	49	45	40	37	34	32
	30	56	56	56	56	56	56	55	49	45	40	37	34	32
	40	50	50	50	50	50	50	50	49	45	40	37	34	32
	50	45	45	45	45	45	45	45	45	45	40	37	34	32
	60	42	42	42	42	42	42	42	42	42	40	37	34	32
	70	39	39	39	39	39	39	39	39	39	39	37	34	32
	80	36	36	36	36	36	36	36	36	36	36	36	34	32
	90	35	35	35	35	35	35	35	35	35	35	35	34	32
Zone 3r	0	80	72	66	61	57	53	50	44	40	36	33	31	29
	10	79	72	66	61	57	53	50	44	40	36	33	31	29
	20	66	66	66	61	57	53	50	44	40	36	33	31	29
	30	56	56	56	56	56	53	50	44	40	36	33	31	29
	40	50	50	50	50	50	50	50	44	40	36	33	31	29
	50	45	45	45	45	45	45	45	44	40	36	33	31	29
	60	42	42	42	42	42	42	42	42	40	36	33	31	29
	70	39	39	39	39	39	39	39	39	39	36	33	31	29
	80	36	36	36	36	36	36	36	36	36	36	33	31	29
	90	35	35	35	35	35	35	35	35	35	35	33	31	29

Notes:

1. Tables are based on critical rail span for load combinations as specified in chapter 2 of the ASCE 7-16 and allowable design loads per the 2015 Aluminum Design Manual.
2. Panels are assumed to be in portrait orientation with a maximum length of 82"

Structural ENGINUITY INC
Ingenuity in Engineering

SUNMODO®

Max Rail Spans for SunModo SMR100 System

Table 57a

Mean Roof Height: h ≤ 15 ft
Roof Angle: 20 < θ ≤ 27 degrees
Exposure Category: D

Panel Orientation: Portrait
North/South Support γ_E = 1
Roof Type : Gable

Roof Wind Zone	Ground Snow Load (psf)	Wind Speed (mph)												
		90	95	100	105	110	115	120	130	140	150	160	170	180
Zones 1 & 2e	0	94	94	94	94	93	89	86	77	69	63	57	53	50
	10	79	79	79	79	79	79	79	77	69	63	57	53	50
	20	66	66	66	66	66	66	66	65	64	63	57	53	50
	30	56	56	56	56	56	56	56	56	56	56	55	53	50
	40	50	50	50	50	50	50	50	50	50	50	50	49	48
	50	45	45	45	45	45	45	45	45	45	45	45	45	45
	60	42	42	42	42	42	42	42	42	42	42	42	42	42
	70	39	39	39	39	39	39	39	39	39	39	39	39	39
	80	36	36	36	36	36	36	36	36	36	36	36	36	36
	90	35	35	35	35	35	35	35	35	35	35	35	35	35
Zones 2n, 2r, & 3e	0	94	91	86	81	75	70	65	58	52	47	43	39	37
	10	79	79	79	79	75	70	65	58	52	47	43	39	37
	20	66	66	66	66	66	66	65	58	52	47	43	39	37
	30	56	56	56	56	56	56	56	56	52	47	43	39	37
	40	50	50	50	50	50	50	50	50	50	47	43	39	37
	50	45	45	45	45	45	45	45	45	45	45	43	39	37
	60	42	42	42	42	42	42	42	42	42	42	42	39	37
	70	39	39	39	39	39	39	39	39	39	39	39	39	37
	80	36	36	36	36	36	36	36	36	36	36	36	36	36
	90	35	35	35	35	35	35	35	35	35	35	35	35	35
Zone 3r	0	91	86	80	73	68	63	59	52	47	42	38	35	33
	10	79	79	79	73	68	63	59	52	47	42	38	35	33
	20	66	66	66	66	66	63	59	52	47	42	38	35	33
	30	56	56	56	56	56	56	56	52	47	42	38	35	33
	40	50	50	50	50	50	50	50	50	47	42	38	35	33
	50	45	45	45	45	45	45	45	45	45	42	38	35	33
	60	42	42	42	42	42	42	42	42	42	42	38	35	33
	70	39	39	39	39	39	39	39	39	39	39	38	35	33
	80	36	36	36	36	36	36	36	36	36	36	36	35	33
	90	35	35	35	35	35	35	35	35	35	35	35	35	33

Notes:

1. Tables are based on critical rail span for load combinations as specified in chapter 2 of the ASCE 7-16 and allowable design loads per the 2015 Aluminum Design Manual.
2. Panels are assumed to be in portrait orientation with a maximum length of 82"

Structural ENGINUITY INC
Ingenuity in Engineering

SUNMODO®

Max Rail Spans for SunModo SMR100 System

Table 57b

Mean Roof Height: h ≤ 15 ft
Roof Angle: 20 < θ ≤ 27 degrees
Exposure Category: D

Panel Orientation: Portrait
North/South Support γ_E = 1.5
Roof Type : Gable

Roof Wind Zone	Ground Snow Load (psf)	Wind Speed (mph)												
		90	95	100	105	110	115	120	130	140	150	160	170	180
Zones 1 & 2e	0	93	88	84	78	73	68	64	58	53	48	45	41	39
	10	79	79	79	78	73	68	64	58	53	48	45	41	39
	20	66	66	66	66	66	66	64	58	53	48	45	41	39
	30	56	56	56	56	56	56	56	56	53	48	45	41	39
	40	50	50	50	50	50	50	50	50	50	48	45	41	39
	50	45	45	45	45	45	45	45	45	45	45	45	41	39
	60	42	42	42	42	42	42	42	42	42	42	42	41	39
	70	39	39	39	39	39	39	39	39	39	39	39	39	39
	80	36	36	36	36	36	36	36	36	36	36	36	36	36
	90	35	35	35	35	35	35	35	35	35	35	35	35	35
Zones 2n, 2r, & 3e	0	75	68	63	59	55	51	48	43	39	36	33	31	29
	10	75	68	63	59	55	51	48	43	39	36	33	31	29
	20	66	66	63	59	55	51	48	43	39	36	33	31	29
	30	56	56	56	56	55	51	48	43	39	36	33	31	29
	40	50	50	50	50	50	50	48	43	39	36	33	31	29
	50	45	45	45	45	45	45	45	43	39	36	33	31	29
	60	42	42	42	42	42	42	42	42	39	36	33	31	29
	70	39	39	39	39	39	39	39	39	39	36	33	31	29
	80	36	36	36	36	36	36	36	36	36	36	33	31	29
	90	35	35	35	35	35	35	35	35	35	35	33	31	29
Zone 3r	0	67	62	57	53	49	46	43	39	35	32	30	28	26
	10	67	62	57	53	49	46	43	39	35	32	30	28	26
	20	66	62	57	53	49	46	43	39	35	32	30	28	26
	30	56	56	56	53	49	46	43	39	35	32	30	28	26
	40	50	50	50	50	49	46	43	39	35	32	30	28	26
	50	45	45	45	45	45	45	43	39	35	32	30	28	26
	60	42	42	42	42	42	42	42	39	35	32	30	28	26
	70	39	39	39	39	39	39	39	39	35	32	30	28	26
	80	36	36	36	36	36	36	36	36	35	32	30	28	26
	90	35	35	35	35	35	35	35	35	35	32	30	28	26

Notes:

1. Tables are based on critical rail span for load combinations as specified in chapter 2 of the ASCE 7-16 and allowable design loads per the 2015 Aluminum Design Manual.
2. Panels are assumed to be in portrait orientation with a maximum length of 82"

Structural ENGINUITY INC
Ingenuity in Engineering

SUNMODO®

Max Rail Spans for SunModo SMR100 System

Table 58a

Mean Roof Height: h ≤ 15 ft
Roof Angle: 27 < θ ≤ 45 degrees
Exposure Category: B

Panel Orientation: Portrait
North/South Support γ_E = 1
Roof Type : Gable

Roof Wind Zone	Ground Snow Load (psf)	Wind Speed (mph)												
		90	95	100	105	110	115	120	130	140	150	160	170	180
Zones 1, 2e, & 2r	0	94	94	94	94	94	94	94	93	90	86	83	79	74
	10	78	78	78	78	78	78	78	78	77	75	73	71	69
	20	68	68	68	68	68	68	68	67	66	64	63	62	61
	30	58	58	58	58	58	58	58	58	58	57	57	56	55
	40	52	52	52	52	52	52	52	52	52	52	52	51	50
	50	47	47	47	47	47	47	47	47	47	47	47	47	47
	60	43	43	43	43	43	43	43	43	43	43	43	43	43
	70	41	41	41	41	41	41	41	41	41	41	41	41	41
	80	38	38	38	38	38	38	38	38	38	38	38	38	38
	90	36	36	36	36	36	36	36	36	36	36	36	36	36
Zones 2n & 3r	0	94	94	94	94	94	94	94	93	90	84	78	71	65
	10	78	78	78	78	78	78	78	78	77	75	73	71	65
	20	68	68	68	68	68	68	68	67	66	64	63	62	61
	30	58	58	58	58	58	58	58	58	58	57	57	56	55
	40	52	52	52	52	52	52	52	52	52	52	52	51	50
	50	47	47	47	47	47	47	47	47	47	47	47	47	47
	60	43	43	43	43	43	43	43	43	43	43	43	43	43
	70	41	41	41	41	41	41	41	41	41	41	41	41	41
	80	38	38	38	38	38	38	38	38	38	38	38	38	38
	90	36	36	36	36	36	36	36	36	36	36	36	36	36
Zone 3e	0	94	94	94	94	94	94	94	87	82	73	66	60	55
	10	78	78	78	78	78	78	78	78	77	73	66	60	55
	20	68	68	68	68	68	68	68	67	66	64	63	60	55
	30	58	58	58	58	58	58	58	58	58	57	57	56	55
	40	52	52	52	52	52	52	52	52	52	52	52	51	50
	50	47	47	47	47	47	47	47	47	47	47	47	47	47
	60	43	43	43	43	43	43	43	43	43	43	43	43	43
	70	41	41	41	41	41	41	41	41	41	41	41	41	41
	80	38	38	38	38	38	38	38	38	38	38	38	38	38
	90	36	36	36	36	36	36	36	36	36	36	36	36	36

Notes:

1. Tables are based on critical rail span for load combinations as specified in chapter 2 of the ASCE 7-16 and allowable design loads per the 2015 Aluminum Design Manual.
2. Panels are assumed to be in portrait orientation with a maximum length of 82"

Structural ENGINUITY INC
Ingenuity in Engineering

SUNMODO®

Max Rail Spans for SunModo SMR100 System

Table 58b

Mean Roof Height: h ≤ 15 ft
Roof Angle: 27 < θ ≤ 45 degrees
Exposure Category: B

Panel Orientation: Portrait
North/South Support γ_E = 1.5
Roof Type : Gable

Roof Wind Zone	Ground Snow Load (psf)	Wind Speed (mph)												
		90	95	100	105	110	115	120	130	140	150	160	170	180
Zones 1, 2e, & 2r	0	94	94	94	94	94	94	94	87	81	72	64	58	53
	10	78	78	78	78	78	78	78	78	77	72	64	58	53
	20	68	68	68	68	68	68	68	67	66	64	63	58	53
	30	58	58	58	58	58	58	58	58	58	57	57	56	53
	40	52	52	52	52	52	52	52	52	52	52	52	51	50
	50	47	47	47	47	47	47	47	47	47	47	47	47	47
	60	43	43	43	43	43	43	43	43	43	43	43	43	43
	70	41	41	41	41	41	41	41	41	41	41	41	41	41
	80	38	38	38	38	38	38	38	38	38	38	38	38	38
	90	36	36	36	36	36	36	36	36	36	36	36	36	36
Zones 2n & 3r	0	94	94	94	94	93	89	86	79	70	63	57	52	48
	10	78	78	78	78	78	78	78	78	70	63	57	52	48
	20	68	68	68	68	68	68	68	67	66	63	57	52	48
	30	58	58	58	58	58	58	58	58	58	57	57	52	48
	40	52	52	52	52	52	52	52	52	52	52	52	51	48
	50	47	47	47	47	47	47	47	47	47	47	47	47	47
	60	43	43	43	43	43	43	43	43	43	43	43	43	43
	70	41	41	41	41	41	41	41	41	41	41	41	41	41
	80	38	38	38	38	38	38	38	38	38	38	38	38	38
	90	36	36	36	36	36	36	36	36	36	36	36	36	36
Zone 3e	0	94	94	92	88	85	81	76	67	59	54	49	45	42
	10	78	78	78	78	78	78	76	67	59	54	49	45	42
	20	68	68	68	68	68	68	68	67	59	54	49	45	42
	30	58	58	58	58	58	58	58	58	58	54	49	45	42
	40	52	52	52	52	52	52	52	52	52	52	49	45	42
	50	47	47	47	47	47	47	47	47	47	47	47	45	42
	60	43	43	43	43	43	43	43	43	43	43	43	43	42
	70	41	41	41	41	41	41	41	41	41	41	41	41	41
	80	38	38	38	38	38	38	38	38	38	38	38	38	38
	90	36	36	36	36	36	36	36	36	36	36	36	36	36

Notes:

1. Tables are based on critical rail span for load combinations as specified in chapter 2 of the ASCE 7-16 and allowable design loads per the 2015 Aluminum Design Manual.
2. Panels are assumed to be in portrait orientation with a maximum length of 82"

Structural ENGINUITY INC
Ingenuity in Engineering

SUNMODO®

Max Rail Spans for SunModo SMR100 System

Table 59a

Mean Roof Height: h ≤ 15 ft
Roof Angle: 27 < θ ≤ 45 degrees
Exposure Category: C

Panel Orientation: Portrait
North/South Support γ_E = 1
Roof Type : Gable

Roof Wind Zone	Ground Snow Load (psf)	Wind Speed (mph)												
		90	95	100	105	110	115	120	130	140	150	160	170	180
Zones 1, 2e, & 2r	0	94	94	94	94	92	89	87	83	79	72	65	59	54
	10	78	78	78	78	77	76	75	73	71	69	65	59	54
	20	68	68	68	67	66	65	65	63	62	60	59	57	54
	30	58	58	58	58	58	58	58	57	55	54	53	52	51
	40	52	52	52	52	52	52	52	52	51	50	49	48	47
	50	47	47	47	47	47	47	47	47	47	46	46	45	44
	60	43	43	43	43	43	43	43	43	43	43	43	42	42
	70	41	41	41	41	41	41	41	41	41	41	41	40	39
	80	38	38	38	38	38	38	38	38	38	38	38	38	38
	90	36	36	36	36	36	36	36	36	36	36	36	36	36
Zones 2n & 3r	0	94	94	94	94	92	89	86	79	70	63	57	53	49
	10	78	78	78	78	77	76	75	73	70	63	57	53	49
	20	68	68	68	67	66	65	65	63	62	60	57	53	49
	30	58	58	58	58	58	58	58	57	55	54	53	52	49
	40	52	52	52	52	52	52	52	52	51	50	49	48	47
	50	47	47	47	47	47	47	47	47	47	46	46	45	44
	60	43	43	43	43	43	43	43	43	43	43	43	42	42
	70	41	41	41	41	41	41	41	41	41	41	41	40	39
	80	38	38	38	38	38	38	38	38	38	38	38	38	38
	90	36	36	36	36	36	36	36	36	36	36	36	36	36
Zone 3e	0	94	94	92	88	85	81	76	67	60	54	49	45	42
	10	78	78	78	78	77	76	75	67	60	54	49	45	42
	20	68	68	68	67	66	65	65	63	60	54	49	45	42
	30	58	58	58	58	58	58	58	57	55	54	49	45	42
	40	52	52	52	52	52	52	52	52	51	50	49	45	42
	50	47	47	47	47	47	47	47	47	47	46	46	45	42
	60	43	43	43	43	43	43	43	43	43	43	43	42	42
	70	41	41	41	41	41	41	41	41	41	41	41	40	39
	80	38	38	38	38	38	38	38	38	38	38	38	38	38
	90	36	36	36	36	36	36	36	36	36	36	36	36	36

Notes:

1. Tables are based on critical rail span for load combinations as specified in chapter 2 of the ASCE 7-16 and allowable design loads per the 2015 Aluminum Design Manual.
2. Panels are assumed to be in portrait orientation with a maximum length of 82"

Structural ENGINUITY INC
Ingenuity in Engineering

SUNMODO®

Max Rail Spans for SunModo SMR100 System

Table 59b

Mean Roof Height: h ≤ 15 ft
Roof Angle: 27 < θ ≤ 45 degrees
Exposure Category: C

Panel Orientation: Portrait
North/South Support γ_E = 1.5
Roof Type : Gable

Roof Wind Zone	Ground Snow Load (psf)	Wind Speed (mph)												
		90	95	100	105	110	115	120	130	140	150	160	170	180
Zones 1, 2e, & 2r	0	94	94	92	88	84	81	75	65	58	52	47	43	40
	10	78	78	78	78	77	76	75	65	58	52	47	43	40
	20	68	68	68	67	66	65	65	63	58	52	47	43	40
	30	58	58	58	58	58	58	58	57	55	52	47	43	40
	40	52	52	52	52	52	52	52	52	51	50	47	43	40
	50	47	47	47	47	47	47	47	47	47	46	46	43	40
	60	43	43	43	43	43	43	43	43	43	43	43	42	40
	70	41	41	41	41	41	41	41	41	41	41	41	40	39
	80	38	38	38	38	38	38	38	38	38	38	38	38	38
	90	36	36	36	36	36	36	36	36	36	36	36	36	36
Zones 2n & 3r	0	93	89	85	81	75	70	65	58	52	47	43	40	37
	10	78	78	78	78	75	70	65	58	52	47	43	40	37
	20	68	68	68	67	66	65	65	58	52	47	43	40	37
	30	58	58	58	58	58	58	58	57	52	47	43	40	37
	40	52	52	52	52	52	52	52	52	51	47	43	40	37
	50	47	47	47	47	47	47	47	47	47	46	43	40	37
	60	43	43	43	43	43	43	43	43	43	43	43	40	37
	70	41	41	41	41	41	41	41	41	41	41	41	40	37
	80	38	38	38	38	38	38	38	38	38	38	38	38	37
	90	36	36	36	36	36	36	36	36	36	36	36	36	36
Zone 3e	0	85	80	74	68	63	59	56	49	45	41	37	34	32
	10	78	78	74	68	63	59	56	49	45	41	37	34	32
	20	68	68	68	67	63	59	56	49	45	41	37	34	32
	30	58	58	58	58	58	58	56	49	45	41	37	34	32
	40	52	52	52	52	52	52	52	49	45	41	37	34	32
	50	47	47	47	47	47	47	47	47	45	41	37	34	32
	60	43	43	43	43	43	43	43	43	43	41	37	34	32
	70	41	41	41	41	41	41	41	41	41	41	37	34	32
	80	38	38	38	38	38	38	38	38	38	38	37	34	32
	90	36	36	36	36	36	36	36	36	36	36	36	34	32

Notes:

1. Tables are based on critical rail span for load combinations as specified in chapter 2 of the ASCE 7-16 and allowable design loads per the 2015 Aluminum Design Manual.
2. Panels are assumed to be in portrait orientation with a maximum length of 82"

Structural ENGINUITY INC
Ingenuity in Engineering

SUNMODO®

Max Rail Spans for SunModo SMR100 System

Table 60a

Mean Roof Height: h ≤ 15 ft
Roof Angle: 27 < θ ≤ 45 degrees
Exposure Category: D

Panel Orientation: Portrait
North/South Support γ_E = 1
Roof Type : Gable

Roof Wind Zone	Ground Snow Load (psf)	Wind Speed (mph)												
		90	95	100	105	110	115	120	130	140	150	160	170	180
Zones 1, 2e, & 2r	0	94	94	92	89	87	84	82	78	69	61	55	51	46
	10	78	78	77	76	75	74	73	70	68	61	55	51	46
	20	68	67	66	65	65	64	63	61	60	58	55	51	46
	30	58	58	58	58	58	57	56	55	54	53	51	50	46
	40	52	52	52	52	52	52	52	51	50	48	47	46	45
	50	47	47	47	47	47	47	47	47	46	45	44	43	43
	60	43	43	43	43	43	43	43	43	43	43	42	41	40
	70	41	41	41	41	41	41	41	41	41	40	40	39	38
	80	38	38	38	38	38	38	38	38	38	38	38	37	37
	90	36	36	36	36	36	36	36	36	36	36	36	36	35
Zones 2n & 3r	0	94	94	92	89	85	82	77	68	61	55	50	46	42
	10	78	78	77	76	75	74	73	68	61	55	50	46	42
	20	68	67	66	65	65	64	63	61	60	55	50	46	42
	30	58	58	58	58	58	57	56	55	54	53	50	46	42
	40	52	52	52	52	52	52	52	51	50	48	47	46	42
	50	47	47	47	47	47	47	47	47	46	45	44	43	42
	60	43	43	43	43	43	43	43	43	43	43	42	41	40
	70	41	41	41	41	41	41	41	41	41	40	40	39	38
	80	38	38	38	38	38	38	38	38	38	38	38	37	37
	90	36	36	36	36	36	36	36	36	36	36	36	36	35
Zone 3e	0	93	89	85	81	75	70	65	58	52	47	43	40	37
	10	78	78	77	76	75	70	65	58	52	47	43	40	37
	20	68	67	66	65	65	64	63	58	52	47	43	40	37
	30	58	58	58	58	58	57	56	55	52	47	43	40	37
	40	52	52	52	52	52	52	52	51	50	47	43	40	37
	50	47	47	47	47	47	47	47	47	46	45	43	40	37
	60	43	43	43	43	43	43	43	43	43	43	42	40	37
	70	41	41	41	41	41	41	41	41	41	40	40	39	37
	80	38	38	38	38	38	38	38	38	38	38	38	37	37
	90	36	36	36	36	36	36	36	36	36	36	36	36	35

Notes:

1. Tables are based on critical rail span for load combinations as specified in chapter 2 of the ASCE 7-16 and allowable design loads per the 2015 Aluminum Design Manual.
2. Panels are assumed to be in portrait orientation with a maximum length of 82"

Structural ENGINUITY INC
Ingenuity in Engineering

SUNMODO®

Max Rail Spans for SunModo SMR100 System

Table 60b	Mean Roof Height: h ≤ 15 ft Roof Angle: 27 < θ ≤ 45 degrees Exposure Category: D	Panel Orientation: Portrait North/South Support γ_E = 1.5 Roof Type : Gable

Roof Wind Zone	Ground Snow Load (psf)	Wind Speed (mph)												
		90	95	100	105	110	115	120	130	140	150	160	170	180
Zones 1, 2e, & 2r	0	93	89	84	80	74	68	63	56	50	45	41	38	35
	10	78	78	77	76	74	68	63	56	50	45	41	38	35
	20	68	67	66	65	65	64	63	56	50	45	41	38	35
	30	58	58	58	58	58	57	56	55	50	45	41	38	35
	40	52	52	52	52	52	52	52	51	50	45	41	38	35
	50	47	47	47	47	47	47	47	47	46	45	41	38	35
	60	43	43	43	43	43	43	43	43	43	43	41	38	35
	70	41	41	41	41	41	41	41	41	41	40	40	38	35
	80	38	38	38	38	38	38	38	38	38	38	38	37	35
	90	36	36	36	36	36	36	36	36	36	36	36	36	35
Zones 2n & 3r	0	85	81	75	69	64	60	57	50	45	41	38	35	33
	10	78	78	75	69	64	60	57	50	45	41	38	35	33
	20	68	67	66	65	64	60	57	50	45	41	38	35	33
	30	58	58	58	58	58	57	56	50	45	41	38	35	33
	40	52	52	52	52	52	52	52	50	45	41	38	35	33
	50	47	47	47	47	47	47	47	47	45	41	38	35	33
	60	43	43	43	43	43	43	43	43	43	41	38	35	33
	70	41	41	41	41	41	41	41	41	41	40	38	35	33
	80	38	38	38	38	38	38	38	38	38	38	38	35	33
	90	36	36	36	36	36	36	36	36	36	36	36	35	33
Zone 3e	0	75	68	63	59	55	51	48	43	39	36	33	31	29
	10	75	68	63	59	55	51	48	43	39	36	33	31	29
	20	68	67	63	59	55	51	48	43	39	36	33	31	29
	30	58	58	58	58	55	51	48	43	39	36	33	31	29
	40	52	52	52	52	52	51	48	43	39	36	33	31	29
	50	47	47	47	47	47	47	47	43	39	36	33	31	29
	60	43	43	43	43	43	43	43	43	39	36	33	31	29
	70	41	41	41	41	41	41	41	41	39	36	33	31	29
	80	38	38	38	38	38	38	38	38	38	36	33	31	29
	90	36	36	36	36	36	36	36	36	36	36	33	31	29

Notes:

1. Tables are based on critical rail span for load combinations as specified in chapter 2 of the ASCE 7-16 and allowable design loads per the 2015 Aluminum Design Manual.
2. Panels are assumed to be in portrait orientation with a maximum length of 82"

Structural ENGINUITY INC
Ingenuity in Engineering

SUNMODO®

Max Rail Spans for SunModo SMR100 System

Table 61a

Mean Roof Height: h ≤ 15 ft
Roof Angle: 7 < θ ≤ 20 degrees
Exposure Category: B

Panel Orientation: Portrait
North/South Support γ_E = 1
Roof Type : Hip h/B = ≥ 0.8

Roof Wind Zone	Ground Snow Load (psf)	Wind Speed (mph)												
		90	95	100	105	110	115	120	130	140	150	160	170	180
Zone 1	0	94	94	94	94	94	94	94	94	92	84	75	68	63
	10	73	73	73	73	73	73	73	73	73	72	71	68	63
	20	56	56	56	56	56	56	56	56	56	56	56	56	56
	30	56	56	56	56	56	56	56	56	56	56	56	56	56
	40	50	50	50	50	50	50	50	50	50	50	50	50	50
	50	45	45	45	45	45	45	45	45	45	45	45	45	45
	60	42	42	42	42	42	42	42	42	42	42	42	42	42
	70	39	39	39	39	39	39	39	39	39	39	39	39	39
	80	36	36	36	36	36	36	36	36	36	36	36	36	36
	90	34	34	34	34	34	34	34	34	34	34	34	34	34
Zone 2r	0	94	94	94	94	94	94	94	89	80	72	66	60	55
	10	73	73	73	73	73	73	73	73	73	72	66	60	55
	20	56	56	56	56	56	56	56	56	56	56	56	56	55
	30	56	56	56	56	56	56	56	56	56	56	56	56	55
	40	50	50	50	50	50	50	50	50	50	50	50	50	50
	50	45	45	45	45	45	45	45	45	45	45	45	45	45
	60	42	42	42	42	42	42	42	42	42	42	42	42	42
	70	39	39	39	39	39	39	39	39	39	39	39	39	39
	80	36	36	36	36	36	36	36	36	36	36	36	36	36
	90	34	34	34	34	34	34	34	34	34	34	34	34	34
Zones 2e & 3	0	94	94	94	94	94	94	93	85	75	68	62	57	52
	10	73	73	73	73	73	73	73	73	73	68	62	57	52
	20	56	56	56	56	56	56	56	56	56	56	56	56	52
	30	56	56	56	56	56	56	56	56	56	56	56	56	52
	40	50	50	50	50	50	50	50	50	50	50	50	50	50
	50	45	45	45	45	45	45	45	45	45	45	45	45	45
	60	42	42	42	42	42	42	42	42	42	42	42	42	42
	70	39	39	39	39	39	39	39	39	39	39	39	39	39
	80	36	36	36	36	36	36	36	36	36	36	36	36	36
	90	34	34	34	34	34	34	34	34	34	34	34	34	34

Notes:

1. Tables are based on critical rail span for load combinations as specified in chapter 2 of the ASCE 7-16 and allowable design loads per the 2015 Aluminum Design Manual.
2. Panels are assumed to be in portrait orientation with a maximum length of 82"

Structural ENGINUITY INC
Ingenuity in Engineering

SUNMODO®

Max Rail Spans for SunModo SMR100 System

Table 61b

Mean Roof Height: h ≤ 15 ft
Roof Angle: 7 < θ ≤ 20 degrees
Exposure Category: B

Panel Orientation: Portrait
North/South Support γ_E = 1.5
Roof Type : Hip h/B = ≥ 0.8

Roof Wind Zone	Ground Snow Load (psf)	Wind Speed (mph)												
		90	95	100	105	110	115	120	130	140	150	160	170	180
Zone 1	0	94	94	94	94	94	91	87	76	68	62	57	53	49
	10	73	73	73	73	73	73	73	73	68	62	57	53	49
	20	56	56	56	56	56	56	56	56	56	56	56	53	49
	30	56	56	56	56	56	56	56	56	56	56	56	53	49
	40	50	50	50	50	50	50	50	50	50	50	50	50	49
	50	45	45	45	45	45	45	45	45	45	45	45	45	45
	60	42	42	42	42	42	42	42	42	42	42	42	42	42
	70	39	39	39	39	39	39	39	39	39	39	39	39	39
	80	36	36	36	36	36	36	36	36	36	36	36	36	36
	90	34	34	34	34	34	34	34	34	34	34	34	34	34
Zone 2r	0	94	94	94	90	85	79	74	66	59	54	49	45	42
	10	73	73	73	73	73	73	73	66	59	54	49	45	42
	20	56	56	56	56	56	56	56	56	56	54	49	45	42
	30	56	56	56	56	56	56	56	56	56	54	49	45	42
	40	50	50	50	50	50	50	50	50	50	50	49	45	42
	50	45	45	45	45	45	45	45	45	45	45	45	45	42
	60	42	42	42	42	42	42	42	42	42	42	42	42	42
	70	39	39	39	39	39	39	39	39	39	39	39	39	39
	80	36	36	36	36	36	36	36	36	36	36	36	36	36
	90	34	34	34	34	34	34	34	34	34	34	34	34	34
Zones 2e & 3	0	94	94	91	86	80	75	70	62	56	51	47	43	40
	10	73	73	73	73	73	73	70	62	56	51	47	43	40
	20	56	56	56	56	56	56	56	56	56	51	47	43	40
	30	56	56	56	56	56	56	56	56	56	51	47	43	40
	40	50	50	50	50	50	50	50	50	50	50	47	43	40
	50	45	45	45	45	45	45	45	45	45	45	45	43	40
	60	42	42	42	42	42	42	42	42	42	42	42	42	40
	70	39	39	39	39	39	39	39	39	39	39	39	39	39
	80	36	36	36	36	36	36	36	36	36	36	36	36	36
	90	34	34	34	34	34	34	34	34	34	34	34	34	34

Notes:

1. Tables are based on critical rail span for load combinations as specified in chapter 2 of the ASCE 7-16 and allowable design loads per the 2015 Aluminum Design Manual.
2. Panels are assumed to be in portrait orientation with a maximum length of 82"

Structural ENGINUITY INC
Ingenuity in Engineering

SUNMODO®

Max Rail Spans for SunModo SMR100 System

Table 62a

Mean Roof Height: h ≤ 15 ft
Roof Angle: 7 < θ ≤ 20 degrees
Exposure Category: C

Panel Orientation: Portrait
North/South Support γ_E = 1
Roof Type : Hip h/B = ≥ 0.8

Roof Wind Zone	Ground Snow Load (psf)	Wind Speed (mph)												
		90	95	100	105	110	115	120	130	140	150	160	170	180
Zone 1	0	94	94	94	94	94	91	88	76	68	62	57	53	49
	10	73	73	73	73	73	73	72	71	68	62	57	53	49
	20	56	56	56	56	56	56	56	56	56	56	55	53	49
	30	56	56	56	56	56	56	56	56	56	56	55	53	49
	40	50	50	50	50	50	50	50	50	50	50	50	49	48
	50	45	45	45	45	45	45	45	45	45	45	45	45	45
	60	42	42	42	42	42	42	42	42	42	42	42	42	42
	70	39	39	39	39	39	39	39	39	39	39	39	39	39
	80	36	36	36	36	36	36	36	36	36	36	36	36	36
	90	34	34	34	34	34	34	34	34	34	34	34	34	34
Zone 2r	0	94	94	94	90	86	80	75	66	60	54	50	46	42
	10	73	73	73	73	73	73	72	66	60	54	50	46	42
	20	56	56	56	56	56	56	56	56	56	54	50	46	42
	30	56	56	56	56	56	56	56	56	56	54	50	46	42
	40	50	50	50	50	50	50	50	50	50	50	50	46	42
	50	45	45	45	45	45	45	45	45	45	45	45	45	42
	60	42	42	42	42	42	42	42	42	42	42	42	42	42
	70	39	39	39	39	39	39	39	39	39	39	39	39	39
	80	36	36	36	36	36	36	36	36	36	36	36	36	36
	90	34	34	34	34	34	34	34	34	34	34	34	34	34
Zones 2e & 3	0	94	94	91	87	80	75	70	63	56	51	47	43	40
	10	73	73	73	73	73	73	70	63	56	51	47	43	40
	20	56	56	56	56	56	56	56	56	56	51	47	43	40
	30	56	56	56	56	56	56	56	56	56	51	47	43	40
	40	50	50	50	50	50	50	50	50	50	50	47	43	40
	50	45	45	45	45	45	45	45	45	45	45	45	43	40
	60	42	42	42	42	42	42	42	42	42	42	42	42	40
	70	39	39	39	39	39	39	39	39	39	39	39	39	39
	80	36	36	36	36	36	36	36	36	36	36	36	36	36
	90	34	34	34	34	34	34	34	34	34	34	34	34	34

Notes:

1. Tables are based on critical rail span for load combinations as specified in chapter 2 of the ASCE 7-16 and allowable design loads per the 2015 Aluminum Design Manual.
2. Panels are assumed to be in portrait orientation with a maximum length of 82"

Structural ENGINUITY INC
Ingenuity in Engineering

SUNMODO®

Max Rail Spans for SunModo SMR100 System

Table 62b

Mean Roof Height: h ≤ 15 ft
Roof Angle: 7 < θ ≤ 20 degrees
Exposure Category: C

Panel Orientation: Portrait
North/South Support γ_E = 1.5
Roof Type : Hip h/B = ≥ 0.8

Roof Wind Zone	Ground Snow Load (psf)	Wind Speed (mph)												
		90	95	100	105	110	115	120	130	140	150	160	170	180
Zone 1	0	94	90	84	78	72	67	64	58	52	48	45	41	39
	10	73	73	73	73	72	67	64	58	52	48	45	41	39
	20	56	56	56	56	56	56	56	56	52	48	45	41	39
	30	56	56	56	56	56	56	56	56	52	48	45	41	39
	40	50	50	50	50	50	50	50	50	50	48	45	41	39
	50	45	45	45	45	45	45	45	45	45	45	45	41	39
	60	42	42	42	42	42	42	42	42	42	42	42	41	39
	70	39	39	39	39	39	39	39	39	39	39	39	39	39
	80	36	36	36	36	36	36	36	36	36	36	36	36	36
	90	34	34	34	34	34	34	34	34	34	34	34	34	34
Zone 2r	0	85	78	72	67	63	59	56	50	45	41	38	35	33
	10	73	73	72	67	63	59	56	50	45	41	38	35	33
	20	56	56	56	56	56	56	56	50	45	41	38	35	33
	30	56	56	56	56	56	56	56	50	45	41	38	35	33
	40	50	50	50	50	50	50	50	50	45	41	38	35	33
	50	45	45	45	45	45	45	45	45	45	41	38	35	33
	60	42	42	42	42	42	42	42	42	42	41	38	35	33
	70	39	39	39	39	39	39	39	39	39	39	38	35	33
	80	36	36	36	36	36	36	36	36	36	36	36	35	33
	90	34	34	34	34	34	34	34	34	34	34	34	34	33
Zones 2e & 3	0	80	74	68	64	59	56	53	47	43	39	36	33	32
	10	73	73	68	64	59	56	53	47	43	39	36	33	32
	20	56	56	56	56	56	56	53	47	43	39	36	33	32
	30	56	56	56	56	56	56	53	47	43	39	36	33	32
	40	50	50	50	50	50	50	50	47	43	39	36	33	32
	50	45	45	45	45	45	45	45	45	43	39	36	33	32
	60	42	42	42	42	42	42	42	42	42	39	36	33	32
	70	39	39	39	39	39	39	39	39	39	39	36	33	32
	80	36	36	36	36	36	36	36	36	36	36	36	33	32
	90	34	34	34	34	34	34	34	34	34	34	34	33	32

Notes:

1. Tables are based on critical rail span for load combinations as specified in chapter 2 of the ASCE 7-16 and allowable design loads per the 2015 Aluminum Design Manual.
2. Panels are assumed to be in portrait orientation with a maximum length of 82"

Structural ENGINUITY INC
Ingenuity in Engineering

SUNMODO®

Max Rail Spans for SunModo SMR100 System

Table 63a

Mean Roof Height: h ≤ 15 ft
Roof Angle: 7 < θ ≤ 20 degrees
Exposure Category: D

Panel Orientation: Portrait
North/South Support γ_E = 1
Roof Type : Hip h/B = ≥ 0.8

Roof Wind Zone	Ground Snow Load (psf)	Wind Speed (mph)												
		90	95	100	105	110	115	120	130	140	150	160	170	180
Zone 1	0	94	94	94	91	86	80	74	66	60	55	51	47	44
	10	73	73	73	73	72	71	70	66	60	55	51	47	44
	20	56	56	56	56	56	56	56	56	55	54	51	47	44
	30	56	56	56	56	56	56	56	56	55	54	51	47	44
	40	50	50	50	50	50	50	50	50	50	49	48	47	44
	50	45	45	45	45	45	45	45	45	45	45	45	44	43
	60	42	42	42	42	42	42	42	42	42	42	42	41	41
	70	39	39	39	39	39	39	39	39	39	39	39	39	39
	80	36	36	36	36	36	36	36	36	36	36	36	36	36
	90	34	34	34	34	34	34	34	34	34	34	34	34	34
Zone 2r	0	94	91	86	79	74	69	65	58	52	47	44	40	37
	10	73	73	73	73	72	69	65	58	52	47	44	40	37
	20	56	56	56	56	56	56	56	56	52	47	44	40	37
	30	56	56	56	56	56	56	56	56	52	47	44	40	37
	40	50	50	50	50	50	50	50	50	50	47	44	40	37
	50	45	45	45	45	45	45	45	45	45	45	44	40	37
	60	42	42	42	42	42	42	42	42	42	42	42	40	37
	70	39	39	39	39	39	39	39	39	39	39	39	39	37
	80	36	36	36	36	36	36	36	36	36	36	36	36	36
	90	34	34	34	34	34	34	34	34	34	34	34	34	34
Zones 2e & 3	0	92	87	80	74	69	65	61	55	49	45	41	38	35
	10	73	73	73	73	69	65	61	55	49	45	41	38	35
	20	56	56	56	56	56	56	56	55	49	45	41	38	35
	30	56	56	56	56	56	56	56	55	49	45	41	38	35
	40	50	50	50	50	50	50	50	50	49	45	41	38	35
	50	45	45	45	45	45	45	45	45	45	45	41	38	35
	60	42	42	42	42	42	42	42	42	42	42	41	38	35
	70	39	39	39	39	39	39	39	39	39	39	39	38	35
	80	36	36	36	36	36	36	36	36	36	36	36	36	35
	90	34	34	34	34	34	34	34	34	34	34	34	34	34

Notes:

1. Tables are based on critical rail span for load combinations as specified in chapter 2 of the ASCE 7-16 and allowable design loads per the 2015 Aluminum Design Manual.
2. Panels are assumed to be in portrait orientation with a maximum length of 82"

Structural ENGINUITY INC
Ingenuity in Engineering

SUNMODO®

Max Rail Spans for SunModo SMR100 System

Table 63b

Mean Roof Height: h ≤ 15 ft
Roof Angle: 7 < θ ≤ 20 degrees
Exposure Category: D

Panel Orientation: Portrait
North/South Support γ_E = 1.5
Roof Type : Hip h/B = ≥ 0.8

Roof Wind Zone	Ground Snow Load (psf)	Wind Speed (mph)												
		90	95	100	105	110	115	120	130	140	150	160	170	180
Zone 1	0	86	78	72	67	63	60	56	51	47	43	40	37	35
	10	73	73	72	67	63	60	56	51	47	43	40	37	35
	20	56	56	56	56	56	56	56	51	47	43	40	37	35
	30	56	56	56	56	56	56	56	51	47	43	40	37	35
	40	50	50	50	50	50	50	50	50	47	43	40	37	35
	50	45	45	45	45	45	45	45	45	45	43	40	37	35
	60	42	42	42	42	42	42	42	42	42	42	40	37	35
	70	39	39	39	39	39	39	39	39	39	39	39	37	35
	80	36	36	36	36	36	36	36	36	36	36	36	36	35
	90	34	34	34	34	34	34	34	34	34	34	34	34	34
Zone 2r	0	73	68	63	59	55	52	49	44	40	36	34	32	30
	10	73	68	63	59	55	52	49	44	40	36	34	32	30
	20	56	56	56	56	55	52	49	44	40	36	34	32	30
	30	56	56	56	56	55	52	49	44	40	36	34	32	30
	40	50	50	50	50	50	50	49	44	40	36	34	32	30
	50	45	45	45	45	45	45	45	44	40	36	34	32	30
	60	42	42	42	42	42	42	42	42	40	36	34	32	30
	70	39	39	39	39	39	39	39	39	39	36	34	32	30
	80	36	36	36	36	36	36	36	36	36	36	34	32	30
	90	34	34	34	34	34	34	34	34	34	34	34	32	30
Zones 2e & 3	0	69	64	59	55	52	49	46	42	38	34	32	30	29
	10	69	64	59	55	52	49	46	42	38	34	32	30	29
	20	56	56	56	55	52	49	46	42	38	34	32	30	29
	30	56	56	56	55	52	49	46	42	38	34	32	30	29
	40	50	50	50	50	50	49	46	42	38	34	32	30	29
	50	45	45	45	45	45	45	45	42	38	34	32	30	29
	60	42	42	42	42	42	42	42	42	38	34	32	30	29
	70	39	39	39	39	39	39	39	39	38	34	32	30	29
	80	36	36	36	36	36	36	36	36	36	34	32	30	29
	90	34	34	34	34	34	34	34	34	34	34	32	30	29

Notes:

1. Tables are based on critical rail span for load combinations as specified in chapter 2 of the ASCE 7-16 and allowable design loads per the 2015 Aluminum Design Manual.
2. Panels are assumed to be in portrait orientation with a maximum length of 82"

Structural ENGINUITY INC
Ingenuity in Engineering

SUNMODO®

Max Rail Spans for SunModo SMR100 System

Table 64a

Mean Roof Height: h ≤ 15 ft
Roof Angle: 7 < θ ≤ 20 degrees
Exposure Category: B

Panel Orientation: Portrait
North/South Support γ_E = 1
Roof Type : Hip h/B = ≤ 0.5

Roof Wind Zone	Ground Snow Load (psf)	Wind Speed (mph)												
		90	95	100	105	110	115	120	130	140	150	160	170	180
Zone 1	0	94	94	94	94	94	94	94	94	94	94	93	87	80
	10	73	73	73	73	73	73	73	73	73	72	69	67	66
	20	56	56	56	56	56	56	56	56	56	56	56	56	55
	30	56	56	56	56	56	56	56	56	56	56	56	56	55
	40	50	50	50	50	50	50	50	50	50	50	50	50	50
	50	45	45	45	45	45	45	45	45	45	45	45	45	45
	60	42	42	42	42	42	42	42	42	42	42	42	42	42
	70	39	39	39	39	39	39	39	39	39	39	39	39	39
	80	36	36	36	36	36	36	36	36	36	36	36	36	36
	90	34	34	34	34	34	34	34	34	34	34	34	34	34
Zone 2r	0	94	94	94	94	94	94	94	89	80	72	66	60	55
	10	73	73	73	73	73	73	73	73	73	72	66	60	55
	20	56	56	56	56	56	56	56	56	56	56	56	56	55
	30	56	56	56	56	56	56	56	56	56	56	56	56	55
	40	50	50	50	50	50	50	50	50	50	50	50	50	50
	50	45	45	45	45	45	45	45	45	45	45	45	45	45
	60	42	42	42	42	42	42	42	42	42	42	42	42	42
	70	39	39	39	39	39	39	39	39	39	39	39	39	39
	80	36	36	36	36	36	36	36	36	36	36	36	36	36
	90	34	34	34	34	34	34	34	34	34	34	34	34	34
Zones 2e & 3	0	94	94	94	94	94	94	94	94	94	88	80	73	67
	10	73	73	73	73	73	73	73	73	73	72	69	67	66
	20	56	56	56	56	56	56	56	56	56	56	56	56	55
	30	56	56	56	56	56	56	56	56	56	56	56	56	55
	40	50	50	50	50	50	50	50	50	50	50	50	50	50
	50	45	45	45	45	45	45	45	45	45	45	45	45	45
	60	42	42	42	42	42	42	42	42	42	42	42	42	42
	70	39	39	39	39	39	39	39	39	39	39	39	39	39
	80	36	36	36	36	36	36	36	36	36	36	36	36	36
	90	34	34	34	34	34	34	34	34	34	34	34	34	34

Notes:

1. Tables are based on critical rail span for load combinations as specified in chapter 2 of the ASCE 7-16 and allowable design loads per the 2015 Aluminum Design Manual.
2. Panels are assumed to be in portrait orientation with a maximum length of 82"

Structural ENGINUITY INC
Ingenuity in Engineering

SUNMODO®

Max Rail Spans for SunModo SMR100 System

Table 64b

Mean Roof Height: h ≤ 15 ft
Roof Angle: 7 < θ ≤ 20 degrees
Exposure Category: B

Panel Orientation: Portrait
North/South Support γ_E = 1.5
Roof Type : Hip h/B = ≤ 0.5

Roof Wind Zone	Ground Snow Load (psf)	Wind Speed (mph)												
		90	95	100	105	110	115	120	130	140	150	160	170	180
Zone 1	0	94	94	94	94	94	94	94	93	86	77	70	65	60
	10	73	73	73	73	73	73	73	73	73	72	69	65	60
	20	56	56	56	56	56	56	56	56	56	56	56	56	55
	30	56	56	56	56	56	56	56	56	56	56	56	56	55
	40	50	50	50	50	50	50	50	50	50	50	50	50	50
	50	45	45	45	45	45	45	45	45	45	45	45	45	45
	60	42	42	42	42	42	42	42	42	42	42	42	42	42
	70	39	39	39	39	39	39	39	39	39	39	39	39	39
	80	36	36	36	36	36	36	36	36	36	36	36	36	36
	90	34	34	34	34	34	34	34	34	34	34	34	34	34
Zone 2r	0	94	94	94	90	85	79	74	66	59	54	49	45	42
	10	73	73	73	73	73	73	73	66	59	54	49	45	42
	20	56	56	56	56	56	56	56	56	56	54	49	45	42
	30	56	56	56	56	56	56	56	56	56	54	49	45	42
	40	50	50	50	50	50	50	50	50	50	50	49	45	42
	50	45	45	45	45	45	45	45	45	45	45	45	45	42
	60	42	42	42	42	42	42	42	42	42	42	42	42	42
	70	39	39	39	39	39	39	39	39	39	39	39	39	39
	80	36	36	36	36	36	36	36	36	36	36	36	36	36
	90	34	34	34	34	34	34	34	34	34	34	34	34	34
Zones 2e & 3	0	94	94	94	94	94	94	90	81	72	65	60	55	51
	10	73	73	73	73	73	73	73	73	72	65	60	55	51
	20	56	56	56	56	56	56	56	56	56	56	56	55	51
	30	56	56	56	56	56	56	56	56	56	56	56	55	51
	40	50	50	50	50	50	50	50	50	50	50	50	50	50
	50	45	45	45	45	45	45	45	45	45	45	45	45	45
	60	42	42	42	42	42	42	42	42	42	42	42	42	42
	70	39	39	39	39	39	39	39	39	39	39	39	39	39
	80	36	36	36	36	36	36	36	36	36	36	36	36	36
	90	34	34	34	34	34	34	34	34	34	34	34	34	34

Notes:

1. Tables are based on critical rail span for load combinations as specified in chapter 2 of the ASCE 7-16 and allowable design loads per the 2015 Aluminum Design Manual.
2. Panels are assumed to be in portrait orientation with a maximum length of 82"

Structural ENGINUITY INC
Ingenuity in Engineering

SUNMODO®

Max Rail Spans for SunModo SMR100 System

Table 65a

Mean Roof Height: h ≤ 15 ft
Roof Angle: 7 < θ ≤ 20 degrees
Exposure Category: C

Panel Orientation: Portrait
North/South Support γ_E = 1
Roof Type : Hip h/B = ≤ 0.5

Roof Wind Zone	Ground Snow Load (psf)	Wind Speed (mph)												
		90	95	100	105	110	115	120	130	140	150	160	170	180
Zone 1	0	94	94	94	94	94	94	94	93	87	78	71	65	61
	10	73	73	73	73	73	73	72	69	67	66	64	62	61
	20	56	56	56	56	56	56	56	56	56	55	54	53	52
	30	56	56	56	56	56	56	56	56	56	55	54	53	52
	40	50	50	50	50	50	50	50	50	50	50	49	48	48
	50	45	45	45	45	45	45	45	45	45	45	45	45	44
	60	42	42	42	42	42	42	42	42	42	42	42	42	42
	70	39	39	39	39	39	39	39	39	39	39	39	39	39
	80	36	36	36	36	36	36	36	36	36	36	36	36	36
	90	34	34	34	34	34	34	34	34	34	34	34	34	34
Zone 2r	0	94	94	94	90	86	80	75	66	60	54	50	46	42
	10	73	73	73	73	73	73	72	66	60	54	50	46	42
	20	56	56	56	56	56	56	56	56	56	54	50	46	42
	30	56	56	56	56	56	56	56	56	56	54	50	46	42
	40	50	50	50	50	50	50	50	50	50	50	49	46	42
	50	45	45	45	45	45	45	45	45	45	45	45	45	42
	60	42	42	42	42	42	42	42	42	42	42	42	42	42
	70	39	39	39	39	39	39	39	39	39	39	39	39	39
	80	36	36	36	36	36	36	36	36	36	36	36	36	36
	90	34	34	34	34	34	34	34	34	34	34	34	34	34
Zones 2e & 3	0	94	94	94	94	94	94	90	81	73	66	60	55	51
	10	73	73	73	73	73	73	72	69	67	66	60	55	51
	20	56	56	56	56	56	56	56	56	56	55	54	53	51
	30	56	56	56	56	56	56	56	56	56	55	54	53	51
	40	50	50	50	50	50	50	50	50	50	50	49	48	48
	50	45	45	45	45	45	45	45	45	45	45	45	45	44
	60	42	42	42	42	42	42	42	42	42	42	42	42	42
	70	39	39	39	39	39	39	39	39	39	39	39	39	39
	80	36	36	36	36	36	36	36	36	36	36	36	36	36
	90	34	34	34	34	34	34	34	34	34	34	34	34	34

Notes:

1. Tables are based on critical rail span for load combinations as specified in chapter 2 of the ASCE 7-16 and allowable design loads per the 2015 Aluminum Design Manual.
2. Panels are assumed to be in portrait orientation with a maximum length of 82"

Structural ENGINUITY INC
Ingenuity in Engineering

SUNMODO®

Max Rail Spans for SunModo SMR100 System

Table 65b

Mean Roof Height: h ≤ 15 ft
Roof Angle: 7 < θ ≤ 20 degrees
Exposure Category: C

Panel Orientation: Portrait
North/South Support γ_E = 1.5
Roof Type : Hip h/B = ≤ 0.5

Roof Wind Zone	Ground Snow Load (psf)	Wind Speed (mph)												
		90	95	100	105	110	115	120	130	140	150	160	170	180
Zone 1	0	94	94	94	94	90	86	80	71	64	59	54	50	47
	10	73	73	73	73	73	73	72	69	64	59	54	50	47
	20	56	56	56	56	56	56	56	56	56	55	54	50	47
	30	56	56	56	56	56	56	56	56	56	55	54	50	47
	40	50	50	50	50	50	50	50	50	50	50	49	48	47
	50	45	45	45	45	45	45	45	45	45	45	45	45	44
	60	42	42	42	42	42	42	42	42	42	42	42	42	42
	70	39	39	39	39	39	39	39	39	39	39	39	39	39
	80	36	36	36	36	36	36	36	36	36	36	36	36	36
	90	34	34	34	34	34	34	34	34	34	34	34	34	34
Zone 2r	0	85	78	72	67	63	59	56	50	45	41	38	35	33
	10	73	73	72	67	63	59	56	50	45	41	38	35	33
	20	56	56	56	56	56	56	56	50	45	41	38	35	33
	30	56	56	56	56	56	56	56	50	45	41	38	35	33
	40	50	50	50	50	50	50	50	50	45	41	38	35	33
	50	45	45	45	45	45	45	45	45	45	41	38	35	33
	60	42	42	42	42	42	42	42	42	42	41	38	35	33
	70	39	39	39	39	39	39	39	39	39	39	38	35	33
	80	36	36	36	36	36	36	36	36	36	36	36	35	33
	90	34	34	34	34	34	34	34	34	34	34	34	34	33
Zones 2e & 3	0	94	93	88	82	77	72	68	60	54	50	46	42	39
	10	73	73	73	73	73	72	68	60	54	50	46	42	39
	20	56	56	56	56	56	56	56	56	54	50	46	42	39
	30	56	56	56	56	56	56	56	56	54	50	46	42	39
	40	50	50	50	50	50	50	50	50	50	50	46	42	39
	50	45	45	45	45	45	45	45	45	45	45	45	42	39
	60	42	42	42	42	42	42	42	42	42	42	42	42	39
	70	39	39	39	39	39	39	39	39	39	39	39	39	39
	80	36	36	36	36	36	36	36	36	36	36	36	36	36
	90	34	34	34	34	34	34	34	34	34	34	34	34	34

Notes:

1. Tables are based on critical rail span for load combinations as specified in chapter 2 of the ASCE 7-16 and allowable design loads per the 2015 Aluminum Design Manual.
2. Panels are assumed to be in portrait orientation with a maximum length of 82"

Structural ENGINUITY INC
Ingenuity in Engineering

SUNMODO®

Max Rail Spans for SunModo SMR100 System

Table 66a

Mean Roof Height: h ≤ 15 ft
Roof Angle: 7 < θ ≤ 20 degrees
Exposure Category: D

Panel Orientation: Portrait
North/South Support γ_E = 1
Roof Type : Hip h/B = ≤ 0.5

Roof Wind Zone	Ground Snow Load (psf)	Wind Speed (mph)												
		90	95	100	105	110	115	120	130	140	150	160	170	180
Zone 1	0	94	94	94	94	94	94	92	84	75	68	62	58	54
	10	73	73	73	73	72	69	69	67	65	63	61	58	54
	20	56	56	56	56	56	56	56	55	54	53	52	51	50
	30	56	56	56	56	56	56	56	55	54	53	52	51	50
	40	50	50	50	50	50	50	50	50	50	49	48	47	46
	50	45	45	45	45	45	45	45	45	45	45	45	44	43
	60	42	42	42	42	42	42	42	42	42	42	42	41	41
	70	39	39	39	39	39	39	39	39	39	39	39	39	38
	80	36	36	36	36	36	36	36	36	36	36	36	36	36
	90	34	34	34	34	34	34	34	34	34	34	34	34	34
Zone 2r	0	94	91	86	79	74	69	65	58	52	47	44	40	37
	10	73	73	73	73	72	69	65	58	52	47	44	40	37
	20	56	56	56	56	56	56	56	55	52	47	44	40	37
	30	56	56	56	56	56	56	56	55	52	47	44	40	37
	40	50	50	50	50	50	50	50	50	50	47	44	40	37
	50	45	45	45	45	45	45	45	45	45	45	44	40	37
	60	42	42	42	42	42	42	42	42	42	42	42	40	37
	70	39	39	39	39	39	39	39	39	39	39	39	39	37
	80	36	36	36	36	36	36	36	36	36	36	36	36	36
	90	34	34	34	34	34	34	34	34	34	34	34	34	34
Zones 2e & 3	0	94	94	94	93	89	85	79	70	63	57	52	48	45
	10	73	73	73	73	72	69	69	67	63	57	52	48	45
	20	56	56	56	56	56	56	56	55	54	53	52	48	45
	30	56	56	56	56	56	56	56	55	54	53	52	48	45
	40	50	50	50	50	50	50	50	50	50	49	48	47	45
	50	45	45	45	45	45	45	45	45	45	45	45	44	43
	60	42	42	42	42	42	42	42	42	42	42	42	41	41
	70	39	39	39	39	39	39	39	39	39	39	39	39	38
	80	36	36	36	36	36	36	36	36	36	36	36	36	36
	90	34	34	34	34	34	34	34	34	34	34	34	34	34

Notes:

1. Tables are based on critical rail span for load combinations as specified in chapter 2 of the ASCE 7-16 and allowable design loads per the 2015 Aluminum Design Manual.
2. Panels are assumed to be in portrait orientation with a maximum length of 82"

Structural ENGINUITY INC
Ingenuity in Engineering

SUNMODO®

Max Rail Spans for SunModo SMR100 System

Table 66b

Mean Roof Height: h ≤ 15 ft
Roof Angle: 7 < θ ≤ 20 degrees
Exposure Category: D

Panel Orientation: Portrait
North/South Support γ_E = 1.5
Roof Type : Hip h/B = ≤ 0.5

Roof Wind Zone	Ground Snow Load (psf)	Wind Speed (mph)												
		90	95	100	105	110	115	120	130	140	150	160	170	180
Zone 1	0	94	94	90	85	79	74	70	63	57	52	48	45	42
	10	73	73	73	73	72	69	69	63	57	52	48	45	42
	20	56	56	56	56	56	56	56	55	54	52	48	45	42
	30	56	56	56	56	56	56	56	55	54	52	48	45	42
	40	50	50	50	50	50	50	50	50	50	49	48	45	42
	50	45	45	45	45	45	45	45	45	45	45	45	44	42
	60	42	42	42	42	42	42	42	42	42	42	42	41	41
	70	39	39	39	39	39	39	39	39	39	39	39	39	38
	80	36	36	36	36	36	36	36	36	36	36	36	36	36
	90	34	34	34	34	34	34	34	34	34	34	34	34	34
Zone 2r	0	73	68	63	59	55	52	49	44	40	36	34	32	30
	10	73	68	63	59	55	52	49	44	40	36	34	32	30
	20	56	56	56	56	55	52	49	44	40	36	34	32	30
	30	56	56	56	56	55	52	49	44	40	36	34	32	30
	40	50	50	50	50	50	50	49	44	40	36	34	32	30
	50	45	45	45	45	45	45	45	44	40	36	34	32	30
	60	42	42	42	42	42	42	42	42	40	36	34	32	30
	70	39	39	39	39	39	39	39	39	39	36	34	32	30
	80	36	36	36	36	36	36	36	36	36	36	34	32	30
	90	34	34	34	34	34	34	34	34	34	34	34	32	30
Zones 2e & 3	0	89	83	77	71	67	63	59	53	48	44	40	37	35
	10	73	73	73	71	67	63	59	53	48	44	40	37	35
	20	56	56	56	56	56	56	56	53	48	44	40	37	35
	30	56	56	56	56	56	56	56	53	48	44	40	37	35
	40	50	50	50	50	50	50	50	50	48	44	40	37	35
	50	45	45	45	45	45	45	45	45	45	44	40	37	35
	60	42	42	42	42	42	42	42	42	42	42	40	37	35
	70	39	39	39	39	39	39	39	39	39	39	39	37	35
	80	36	36	36	36	36	36	36	36	36	36	36	36	35
	90	34	34	34	34	34	34	34	34	34	34	34	34	34

Notes:

1. Tables are based on critical rail span for load combinations as specified in chapter 2 of the ASCE 7-16 and allowable design loads per the 2015 Aluminum Design Manual.
2. Panels are assumed to be in portrait orientation with a maximum length of 82"

Structural ENGINUITY INC
Ingenuity in Engineering

SUNMODO®

Max Rail Spans for SunModo SMR100 System

Table 67a

Mean Roof Height: h ≤ 15 ft
Roof Angle: 20 < θ ≤ 27 degrees
Exposure Category: B

Panel Orientation: Portrait
North/South Support γ_E = 1
Roof Type : Hip

Roof Wind Zone	Ground Snow Load (psf)	Wind Speed (mph)												
		90	95	100	105	110	115	120	130	140	150	160	170	180
Zone 1	0	94	94	94	94	94	94	94	94	94	94	94	91	86
	10	79	79	79	79	79	79	79	79	79	79	77	76	74
	20	66	66	66	66	66	66	66	66	66	66	65	64	63
	30	56	56	56	56	56	56	56	56	56	56	56	56	56
	40	50	50	50	50	50	50	50	50	50	50	50	50	50
	50	45	45	45	45	45	45	45	45	45	45	45	45	45
	60	42	42	42	42	42	42	42	42	42	42	42	42	42
	70	39	39	39	39	39	39	39	39	39	39	39	39	39
	80	36	36	36	36	36	36	36	36	36	36	36	36	36
	90	35	35	35	35	35	35	35	35	35	35	35	35	35
Zones 2e, 2r, & 3	0	94	94	94	94	94	94	94	94	91	85	78	70	65
	10	79	79	79	79	79	79	79	79	79	79	77	70	65
	20	66	66	66	66	66	66	66	66	66	66	65	64	63
	30	56	56	56	56	56	56	56	56	56	56	56	56	56
	40	50	50	50	50	50	50	50	50	50	50	50	50	50
	50	45	45	45	45	45	45	45	45	45	45	45	45	45
	60	42	42	42	42	42	42	42	42	42	42	42	42	42
	70	39	39	39	39	39	39	39	39	39	39	39	39	39
	80	36	36	36	36	36	36	36	36	36	36	36	36	36
	90	35	35	35	35	35	35	35	35	35	35	35	35	35

Notes:

1. Tables are based on critical rail span for load combinations as specified in chapter 2 of the ASCE 7-16 and allowable design loads per the 2015 Aluminum Design Manual.
2. Panels are assumed to be in portrait orientation with a maximum length of 82"

Structural ENGINUITY INC
Ingenuity in Engineering

SUNMODO®

Max Rail Spans for SunModo SMR100 System

Table 67b	Mean Roof Height: h ≤ 15 ft Roof Angle: 20 < θ ≤ 27 degrees Exposure Category: B	Panel Orientation: Portrait North/South Support γ_E = 1.5 Roof Type : Hip

Roof Wind Zone	Ground Snow Load (psf)	Wind Speed (mph)												
		90	95	100	105	110	115	120	130	140	150	160	170	180
Zone 1	0	94	94	94	94	94	94	94	94	90	84	76	69	63
	10	79	79	79	79	79	79	79	79	79	79	76	69	63
	20	66	66	66	66	66	66	66	66	66	66	65	64	63
	30	56	56	56	56	56	56	56	56	56	56	56	56	56
	40	50	50	50	50	50	50	50	50	50	50	50	50	50
	50	45	45	45	45	45	45	45	45	45	45	45	45	45
	60	42	42	42	42	42	42	42	42	42	42	42	42	42
	70	39	39	39	39	39	39	39	39	39	39	39	39	39
	80	36	36	36	36	36	36	36	36	36	36	36	36	36
	90	35	35	35	35	35	35	35	35	35	35	35	35	35
Zones 2e, 2r, & 3	0	94	94	94	94	94	90	87	78	70	63	57	52	48
	10	79	79	79	79	79	79	79	78	70	63	57	52	48
	20	66	66	66	66	66	66	66	66	66	63	57	52	48
	30	56	56	56	56	56	56	56	56	56	56	56	52	48
	40	50	50	50	50	50	50	50	50	50	50	50	50	48
	50	45	45	45	45	45	45	45	45	45	45	45	45	45
	60	42	42	42	42	42	42	42	42	42	42	42	42	42
	70	39	39	39	39	39	39	39	39	39	39	39	39	39
	80	36	36	36	36	36	36	36	36	36	36	36	36	36
	90	35	35	35	35	35	35	35	35	35	35	35	35	35

Notes:

1. Tables are based on critical rail span for load combinations as specified in chapter 2 of the ASCE 7-16 and allowable design loads per the 2015 Aluminum Design Manual.
2. Panels are assumed to be in portrait orientation with a maximum length of 82"

Structural ENGINUITY INC
Ingenuity in Engineering

SUNMODO®

Max Rail Spans for SunModo SMR100 System

Table 68a

Mean Roof Height: h ≤ 15 ft
Roof Angle: 20 < θ ≤ 27 degrees
Exposure Category: C

Panel Orientation: Portrait
North/South Support γ_E = 1
Roof Type : Hip

Roof Wind Zone	Ground Snow Load (psf)	Wind Speed (mph)												
		90	95	100	105	110	115	120	130	140	150	160	170	180
Zone 1	0	94	94	94	94	94	94	94	94	90	84	76	69	63
	10	79	79	79	79	79	79	79	77	75	73	72	69	63
	20	66	66	66	66	66	66	66	65	64	62	61	60	59
	30	56	56	56	56	56	56	56	56	56	55	54	54	53
	40	50	50	50	50	50	50	50	50	50	50	50	49	48
	50	45	45	45	45	45	45	45	45	45	45	45	45	45
	60	42	42	42	42	42	42	42	42	42	42	42	42	42
	70	39	39	39	39	39	39	39	39	39	39	39	39	39
	80	36	36	36	36	36	36	36	36	36	36	36	36	36
	90	35	35	35	35	35	35	35	35	35	35	35	35	35
Zones 2e, 2r, & 3	0	94	94	94	94	94	91	87	79	70	63	57	52	48
	10	79	79	79	79	79	79	79	77	70	63	57	52	48
	20	66	66	66	66	66	66	66	65	64	62	57	52	48
	30	56	56	56	56	56	56	56	56	56	55	54	52	48
	40	50	50	50	50	50	50	50	50	50	50	50	49	48
	50	45	45	45	45	45	45	45	45	45	45	45	45	45
	60	42	42	42	42	42	42	42	42	42	42	42	42	42
	70	39	39	39	39	39	39	39	39	39	39	39	39	39
	80	36	36	36	36	36	36	36	36	36	36	36	36	36
	90	35	35	35	35	35	35	35	35	35	35	35	35	35

Notes:

1. Tables are based on critical rail span for load combinations as specified in chapter 2 of the ASCE 7-16 and allowable design loads per the 2015 Aluminum Design Manual.
2. Panels are assumed to be in portrait orientation with a maximum length of 82"

Max Rail Spans for SunModo SMR100 System

Table 68b	Mean Roof Height: h ≤ 15 ft Roof Angle: 20 < θ ≤ 27 degrees Exposure Category: C	Panel Orientation: Portrait North/South Support γ_E = 1.5 Roof Type : Hip

Roof Wind Zone	Ground Snow Load (psf)	Wind Speed (mph)												
		90	95	100	105	110	115	120	130	140	150	160	170	180
Zone 1	0	94	94	94	94	94	90	86	77	68	61	56	51	47
	10	79	79	79	79	79	79	79	77	68	61	56	51	47
	20	66	66	66	66	66	66	66	65	64	61	56	51	47
	30	56	56	56	56	56	56	56	56	56	55	54	51	47
	40	50	50	50	50	50	50	50	50	50	50	50	49	47
	50	45	45	45	45	45	45	45	45	45	45	45	45	45
	60	42	42	42	42	42	42	42	42	42	42	42	42	42
	70	39	39	39	39	39	39	39	39	39	39	39	39	39
	80	36	36	36	36	36	36	36	36	36	36	36	36	36
	90	35	35	35	35	35	35	35	35	35	35	35	35	35
Zones 2e, 2r, & 3	0	94	90	86	80	74	69	65	58	52	47	43	40	37
	10	79	79	79	79	74	69	65	58	52	47	43	40	37
	20	66	66	66	66	66	66	65	58	52	47	43	40	37
	30	56	56	56	56	56	56	56	56	52	47	43	40	37
	40	50	50	50	50	50	50	50	50	50	47	43	40	37
	50	45	45	45	45	45	45	45	45	45	45	43	40	37
	60	42	42	42	42	42	42	42	42	42	42	42	40	37
	70	39	39	39	39	39	39	39	39	39	39	39	39	37
	80	36	36	36	36	36	36	36	36	36	36	36	36	36
	90	35	35	35	35	35	35	35	35	35	35	35	35	35

Notes:

1. Tables are based on critical rail span for load combinations as specified in chapter 2 of the ASCE 7-16 and allowable design loads per the 2015 Aluminum Design Manual.
2. Panels are assumed to be in portrait orientation with a maximum length of 82"

Structural ENGINUITY INC
Ingenuity in Engineering

SUNMODO®

Max Rail Spans for SunModo SMR100 System

Table 69a

Mean Roof Height: h ≤ 15 ft
Roof Angle: 20 < θ ≤ 27 degrees
Exposure Category: D

Panel Orientation: Portrait
North/South Support γ_E = 1
Roof Type : Hip

Roof Wind Zone	Ground Snow Load (psf)	Wind Speed (mph)												
		90	95	100	105	110	115	120	130	140	150	160	170	180
Zone 1	0	94	94	94	94	94	94	94	88	81	72	65	59	55
	10	79	79	79	79	79	78	77	75	73	71	65	59	55
	20	66	66	66	66	66	65	65	63	62	61	59	58	55
	30	56	56	56	56	56	56	56	56	55	54	53	52	51
	40	50	50	50	50	50	50	50	50	50	49	48	48	47
	50	45	45	45	45	45	45	45	45	45	45	45	44	43
	60	42	42	42	42	42	42	42	42	42	42	42	41	41
	70	39	39	39	39	39	39	39	39	39	39	39	39	39
	80	36	36	36	36	36	36	36	36	36	36	36	36	36
	90	35	35	35	35	35	35	35	35	35	35	35	35	35
Zones 2e, 2r, & 3	0	94	94	94	90	86	82	77	67	60	55	50	46	42
	10	79	79	79	79	79	78	77	67	60	55	50	46	42
	20	66	66	66	66	66	65	65	63	60	55	50	46	42
	30	56	56	56	56	56	56	56	56	55	54	50	46	42
	40	50	50	50	50	50	50	50	50	50	49	48	46	42
	50	45	45	45	45	45	45	45	45	45	45	45	44	42
	60	42	42	42	42	42	42	42	42	42	42	42	41	41
	70	39	39	39	39	39	39	39	39	39	39	39	39	39
	80	36	36	36	36	36	36	36	36	36	36	36	36	36
	90	35	35	35	35	35	35	35	35	35	35	35	35	35

Notes:

1. Tables are based on critical rail span for load combinations as specified in chapter 2 of the ASCE 7-16 and allowable design loads per the 2015 Aluminum Design Manual.
2. Panels are assumed to be in portrait orientation with a maximum length of 82"

Structural ENGINUITY INC
Ingenuity in Engineering

SUNMODO®

Max Rail Spans for SunModo SMR100 System

Table 69b

Mean Roof Height: h ≤ 15 ft
Roof Angle: 20 < θ ≤ 27 degrees
Exposure Category: D

Panel Orientation: Portrait
North/South Support γ_E = 1.5
Roof Type : Hip

Roof Wind Zone	Ground Snow Load (psf)	Wind Speed (mph)												
		90	95	100	105	110	115	120	130	140	150	160	170	180
Zone 1	0	94	94	93	89	85	80	75	66	59	53	48	44	41
	10	79	79	79	79	79	78	75	66	59	53	48	44	41
	20	66	66	66	66	66	65	65	63	59	53	48	44	41
	30	56	56	56	56	56	56	56	56	55	53	48	44	41
	40	50	50	50	50	50	50	50	50	50	49	48	44	41
	50	45	45	45	45	45	45	45	45	45	45	45	44	41
	60	42	42	42	42	42	42	42	42	42	42	42	41	41
	70	39	39	39	39	39	39	39	39	39	39	39	39	39
	80	36	36	36	36	36	36	36	36	36	36	36	36	36
	90	35	35	35	35	35	35	35	35	35	35	35	35	35
Zones 2e, 2r, & 3	0	86	81	74	69	64	60	56	50	45	41	38	35	33
	10	79	79	74	69	64	60	56	50	45	41	38	35	33
	20	66	66	66	66	64	60	56	50	45	41	38	35	33
	30	56	56	56	56	56	56	56	50	45	41	38	35	33
	40	50	50	50	50	50	50	50	50	45	41	38	35	33
	50	45	45	45	45	45	45	45	45	45	41	38	35	33
	60	42	42	42	42	42	42	42	42	42	41	38	35	33
	70	39	39	39	39	39	39	39	39	39	39	38	35	33
	80	36	36	36	36	36	36	36	36	36	36	36	35	33
	90	35	35	35	35	35	35	35	35	35	35	35	35	33

Notes:

1. Tables are based on critical rail span for load combinations as specified in chapter 2 of the ASCE 7-16 and allowable design loads per the 2015 Aluminum Design Manual.
2. Panels are assumed to be in portrait orientation with a maximum length of 82"

Structural ENGINUITY INC
Ingenuity in Engineering

SUNMODO®

Max Rail Spans for SunModo SMR100 System

Table 70a

Mean Roof Height: h ≤ 15 ft
Roof Angle: 27 < θ ≤ 45 degrees
Exposure Category: B

Panel Orientation: Portrait
North/South Support γ_E = 1
Roof Type : Hip

Roof Wind Zone	Ground Snow Load (psf)	Wind Speed (mph)												
		90	95	100	105	110	115	120	130	140	150	160	170	180
Zone 1	0	94	94	94	94	94	94	94	94	94	94	91	86	82
	10	78	78	78	78	78	78	78	78	78	78	78	76	75
	20	68	68	68	68	68	68	68	68	68	67	66	65	64
	30	58	58	58	58	58	58	58	58	58	58	58	58	57
	40	52	52	52	52	52	52	52	52	52	52	52	52	52
	50	47	47	47	47	47	47	47	47	47	47	47	47	47
	60	43	43	43	43	43	43	43	43	43	43	43	43	43
	70	41	41	41	41	41	41	41	41	41	41	41	41	41
	80	38	38	38	38	38	38	38	38	38	38	38	38	38
	90	36	36	36	36	36	36	36	36	36	36	36	36	36
Zone 2e	0	94	94	94	94	94	94	94	94	94	94	91	85	81
	10	78	78	78	78	78	78	78	78	78	78	78	76	75
	20	68	68	68	68	68	68	68	68	68	67	66	65	64
	30	58	58	58	58	58	58	58	58	58	58	58	58	57
	40	52	52	52	52	52	52	52	52	52	52	52	52	52
	50	47	47	47	47	47	47	47	47	47	47	47	47	47
	60	43	43	43	43	43	43	43	43	43	43	43	43	43
	70	41	41	41	41	41	41	41	41	41	41	41	41	41
	80	38	38	38	38	38	38	38	38	38	38	38	38	38
	90	36	36	36	36	36	36	36	36	36	36	36	36	36
Zone 2r	0	94	94	94	94	94	94	94	94	88	82	75	67	61
	10	78	78	78	78	78	78	78	78	78	78	75	67	61
	20	68	68	68	68	68	68	68	68	68	67	66	65	61
	30	58	58	58	58	58	58	58	58	58	58	58	58	57
	40	52	52	52	52	52	52	52	52	52	52	52	52	52
	50	47	47	47	47	47	47	47	47	47	47	47	47	47
	60	43	43	43	43	43	43	43	43	43	43	43	43	43
	70	41	41	41	41	41	41	41	41	41	41	41	41	41
	80	38	38	38	38	38	38	38	38	38	38	38	38	38
	90	36	36	36	36	36	36	36	36	36	36	36	36	36
Zone 3	0	94	94	94	94	94	94	94	94	92	85	80	70	62
	10	78	78	78	78	78	78	78	78	78	78	78	70	62
	20	68	68	68	68	68	68	68	68	68	67	66	65	62
	30	58	58	58	58	58	58	58	58	58	58	58	58	57
	40	52	52	52	52	52	52	52	52	52	52	52	52	52
	50	47	47	47	47	47	47	47	47	47	47	47	47	47
	60	43	43	43	43	43	43	43	43	43	43	43	43	43
	70	41	41	41	41	41	41	41	41	41	41	41	41	41
	80	38	38	38	38	38	38	38	38	38	38	38	38	38
	90	36	36	36	36	36	36	36	36	36	36	36	36	36

Notes:

1. Tables are based on critical rail span for load combinations as specified in chapter 2 of the ASCE 7-16 and allowable design loads per the 2015 Aluminum Design Manual.
2. Panels are assumed to be in portrait orientation with a maximum length of 82"

Structural ENGINUITY INC
Ingenuity in Engineering

SUNMODO®

Max Rail Spans for SunModo SMR100 System

Table 70b

Mean Roof Height: h ≤ 15 ft
Roof Angle: 27 < θ ≤ 45 degrees
Exposure Category: B

Panel Orientation: Portrait
North/South Support γ_E = 1.5
Roof Type : Hip

Roof Wind Zone	Ground Snow Load (psf)	Wind Speed (mph)												
		90	95	100	105	110	115	120	130	140	150	160	170	180
Zone 1	0	94	94	94	94	94	94	94	91	85	80	72	65	60
	10	78	78	78	78	78	78	78	78	78	78	72	65	60
	20	68	68	68	68	68	68	68	68	68	67	66	65	60
	30	58	58	58	58	58	58	58	58	58	58	58	58	57
	40	52	52	52	52	52	52	52	52	52	52	52	52	52
	50	47	47	47	47	47	47	47	47	47	47	47	47	47
	60	43	43	43	43	43	43	43	43	43	43	43	43	43
	70	41	41	41	41	41	41	41	41	41	41	41	41	41
	80	38	38	38	38	38	38	38	38	38	38	38	38	38
	90	36	36	36	36	36	36	36	36	36	36	36	36	36
Zone 2e	0	94	94	94	94	94	94	94	91	85	78	68	61	55
	10	78	78	78	78	78	78	78	78	78	78	68	61	55
	20	68	68	68	68	68	68	68	68	68	67	66	61	55
	30	58	58	58	58	58	58	58	58	58	58	58	58	55
	40	52	52	52	52	52	52	52	52	52	52	52	52	52
	50	47	47	47	47	47	47	47	47	47	47	47	47	47
	60	43	43	43	43	43	43	43	43	43	43	43	43	43
	70	41	41	41	41	41	41	41	41	41	41	41	41	41
	80	38	38	38	38	38	38	38	38	38	38	38	38	38
	90	36	36	36	36	36	36	36	36	36	36	36	36	36
Zone 2r	0	94	94	94	94	91	87	84	76	66	59	53	49	45
	10	78	78	78	78	78	78	78	76	66	59	53	49	45
	20	68	68	68	68	68	68	68	68	66	59	53	49	45
	30	58	58	58	58	58	58	58	58	58	58	53	49	45
	40	52	52	52	52	52	52	52	52	52	52	52	49	45
	50	47	47	47	47	47	47	47	47	47	47	47	47	45
	60	43	43	43	43	43	43	43	43	43	43	43	43	43
	70	41	41	41	41	41	41	41	41	41	41	41	41	41
	80	38	38	38	38	38	38	38	38	38	38	38	38	38
	90	36	36	36	36	36	36	36	36	36	36	36	36	36
Zone 3	0	94	94	94	94	94	91	87	80	68	60	53	48	43
	10	78	78	78	78	78	78	78	78	68	60	53	48	43
	20	68	68	68	68	68	68	68	68	68	60	53	48	43
	30	58	58	58	58	58	58	58	58	58	58	53	48	43
	40	52	52	52	52	52	52	52	52	52	52	52	48	43
	50	47	47	47	47	47	47	47	47	47	47	47	47	43
	60	43	43	43	43	43	43	43	43	43	43	43	43	43
	70	41	41	41	41	41	41	41	41	41	41	41	41	41
	80	38	38	38	38	38	38	38	38	38	38	38	38	38
	90	36	36	36	36	36	36	36	36	36	36	36	36	36

Notes:

1. Tables are based on critical rail span for load combinations as specified in chapter 2 of the ASCE 7-16 and allowable design loads per the 2015 Aluminum Design Manual.
2. Panels are assumed to be in portrait orientation with a maximum length of 82"

Structural ENGINUITY INC
Ingenuity in Engineering

SUNMODO®

Max Rail Spans for SunModo SMR100 System

Table 71a

Mean Roof Height: h ≤ 15 ft
Roof Angle: 27 < θ ≤ 45 degrees
Exposure Category: C

Panel Orientation: Portrait
North/South Support γ_E = 1
Roof Type : Hip

Roof Wind Zone	Ground Snow Load (psf)	Wind Speed (mph)												
		90	95	100	105	110	115	120	130	140	150	160	170	180
Zone 1	0	94	94	94	94	94	94	94	91	85	80	73	66	60
	10	78	78	78	78	78	78	78	78	76	74	72	66	60
	20	68	68	68	68	68	68	67	66	65	64	63	61	60
	30	58	58	58	58	58	58	58	58	58	57	56	55	54
	40	52	52	52	52	52	52	52	52	52	52	51	51	50
	50	47	47	47	47	47	47	47	47	47	47	47	47	46
	60	43	43	43	43	43	43	43	43	43	43	43	43	43
	70	41	41	41	41	41	41	41	41	41	41	41	41	41
	80	38	38	38	38	38	38	38	38	38	38	38	38	38
	90	36	36	36	36	36	36	36	36	36	36	36	36	36
Zone 2e	0	94	94	94	94	94	94	94	92	85	79	69	61	55
	10	78	78	78	78	78	78	78	78	76	74	69	61	55
	20	68	68	68	68	68	68	67	66	65	64	63	61	55
	30	58	58	58	58	58	58	58	58	58	57	56	55	54
	40	52	52	52	52	52	52	52	52	52	52	51	51	50
	50	47	47	47	47	47	47	47	47	47	47	47	47	46
	60	43	43	43	43	43	43	43	43	43	43	43	43	43
	70	41	41	41	41	41	41	41	41	41	41	41	41	41
	80	38	38	38	38	38	38	38	38	38	38	38	38	38
	90	36	36	36	36	36	36	36	36	36	36	36	36	36
Zone 2r	0	94	94	94	94	91	87	84	76	67	60	54	49	45
	10	78	78	78	78	78	78	78	76	67	60	54	49	45
	20	68	68	68	68	68	68	67	66	65	60	54	49	45
	30	58	58	58	58	58	58	58	58	58	57	54	49	45
	40	52	52	52	52	52	52	52	52	52	52	51	49	45
	50	47	47	47	47	47	47	47	47	47	47	47	47	45
	60	43	43	43	43	43	43	43	43	43	43	43	43	43
	70	41	41	41	41	41	41	41	41	41	41	41	41	41
	80	38	38	38	38	38	38	38	38	38	38	38	38	38
	90	36	36	36	36	36	36	36	36	36	36	36	36	36
Zone 3	0	94	94	94	94	94	92	88	80	69	60	53	48	43
	10	78	78	78	78	78	78	78	78	69	60	53	48	43
	20	68	68	68	68	68	68	67	66	65	60	53	48	43
	30	58	58	58	58	58	58	58	58	58	57	53	48	43
	40	52	52	52	52	52	52	52	52	52	52	51	48	43
	50	47	47	47	47	47	47	47	47	47	47	47	47	43
	60	43	43	43	43	43	43	43	43	43	43	43	43	43
	70	41	41	41	41	41	41	41	41	41	41	41	41	41
	80	38	38	38	38	38	38	38	38	38	38	38	38	38
	90	36	36	36	36	36	36	36	36	36	36	36	36	36

Notes:

1. Tables are based on critical rail span for load combinations as specified in chapter 2 of the ASCE 7-16 and allowable design loads per the 2015 Aluminum Design Manual.
2. Panels are assumed to be in portrait orientation with a maximum length of 82"

Structural ENGINUITY INC
Ingenuity in Engineering

SUNMODO®

Max Rail Spans for SunModo SMR100 System

Table 71b

Mean Roof Height: h ≤ 15 ft
Roof Angle: 27 < θ ≤ 45 degrees
Exposure Category: C

Panel Orientation: Portrait
North/South Support γ_E = 1.5
Roof Type : Hip

Roof Wind Zone	Ground Snow Load (psf)	Wind Speed (mph)												
		90	95	100	105	110	115	120	130	140	150	160	170	180
Zone 1	0	94	94	94	92	88	85	82	73	65	58	53	48	45
	10	78	78	78	78	78	78	78	73	65	58	53	48	45
	20	68	68	68	68	68	68	67	66	65	58	53	48	45
	30	58	58	58	58	58	58	58	58	58	57	53	48	45
	40	52	52	52	52	52	52	52	52	52	52	51	48	45
	50	47	47	47	47	47	47	47	47	47	47	47	47	45
	60	43	43	43	43	43	43	43	43	43	43	43	43	43
	70	41	41	41	41	41	41	41	41	41	41	41	41	41
	80	38	38	38	38	38	38	38	38	38	38	38	38	38
	90	36	36	36	36	36	36	36	36	36	36	36	36	36
Zone 2e	0	94	94	94	93	88	84	81	69	60	53	48	43	40
	10	78	78	78	78	78	78	78	69	60	53	48	43	40
	20	68	68	68	68	68	68	67	66	60	53	48	43	40
	30	58	58	58	58	58	58	58	58	58	53	48	43	40
	40	52	52	52	52	52	52	52	52	52	52	48	43	40
	50	47	47	47	47	47	47	47	47	47	47	47	43	40
	60	43	43	43	43	43	43	43	43	43	43	43	43	40
	70	41	41	41	41	41	41	41	41	41	41	41	41	40
	80	38	38	38	38	38	38	38	38	38	38	38	38	38
	90	36	36	36	36	36	36	36	36	36	36	36	36	36
Zone 2r	0	91	86	82	78	71	66	62	54	48	44	40	36	34
	10	78	78	78	78	71	66	62	54	48	44	40	36	34
	20	68	68	68	68	68	66	62	54	48	44	40	36	34
	30	58	58	58	58	58	58	58	54	48	44	40	36	34
	40	52	52	52	52	52	52	52	52	48	44	40	36	34
	50	47	47	47	47	47	47	47	47	47	44	40	36	34
	60	43	43	43	43	43	43	43	43	43	43	40	36	34
	70	41	41	41	41	41	41	41	41	41	41	40	36	34
	80	38	38	38	38	38	38	38	38	38	38	38	36	34
	90	36	36	36	36	36	36	36	36	36	36	36	36	34
Zone 3	0	94	91	86	81	75	68	62	54	47	42	38	35	32
	10	78	78	78	78	75	68	62	54	47	42	38	35	32
	20	68	68	68	68	68	68	62	54	47	42	38	35	32
	30	58	58	58	58	58	58	58	54	47	42	38	35	32
	40	52	52	52	52	52	52	52	52	47	42	38	35	32
	50	47	47	47	47	47	47	47	47	47	42	38	35	32
	60	43	43	43	43	43	43	43	43	43	42	38	35	32
	70	41	41	41	41	41	41	41	41	41	41	38	35	32
	80	38	38	38	38	38	38	38	38	38	38	38	35	32
	90	36	36	36	36	36	36	36	36	36	36	36	35	32

Notes:

1. Tables are based on critical rail span for load combinations as specified in chapter 2 of the ASCE 7-16 and allowable design loads per the 2015 Aluminum Design Manual.
2. Panels are assumed to be in portrait orientation with a maximum length of 82"

Structural ENGINUITY INC
Ingenuity in Engineering

SUNMODO®

Max Rail Spans for SunModo SMR100 System

Table 72a

Mean Roof Height: h ≤ 15 ft
Roof Angle: 27 < θ ≤ 45 degrees
Exposure Category: D

Panel Orientation: Portrait
North/South Support γ_E = 1
Roof Type : Hip

Roof Wind Zone	Ground Snow Load (psf)	Wind Speed (mph)												
		90	95	100	105	110	115	120	130	140	150	160	170	180
Zone 1	0	94	94	94	94	94	94	90	84	77	69	62	57	52
	10	78	78	78	78	78	78	77	75	73	69	62	57	52
	20	68	68	68	68	67	67	66	65	63	62	61	57	52
	30	58	58	58	58	58	58	58	58	57	56	55	53	52
	40	52	52	52	52	52	52	52	52	52	51	50	49	48
	50	47	47	47	47	47	47	47	47	47	47	47	46	45
	60	43	43	43	43	43	43	43	43	43	43	43	43	42
	70	41	41	41	41	41	41	41	41	41	41	41	41	40
	80	38	38	38	38	38	38	38	38	38	38	38	38	38
	90	36	36	36	36	36	36	36	36	36	36	36	36	36
Zone 2e	0	94	94	94	94	94	94	90	83	74	65	57	52	47
	10	78	78	78	78	78	78	77	75	73	65	57	52	47
	20	68	68	68	68	67	67	66	65	63	62	57	52	47
	30	58	58	58	58	58	58	58	58	57	56	55	52	47
	40	52	52	52	52	52	52	52	52	52	51	50	49	47
	50	47	47	47	47	47	47	47	47	47	47	47	46	45
	60	43	43	43	43	43	43	43	43	43	43	43	43	42
	70	41	41	41	41	41	41	41	41	41	41	41	41	40
	80	38	38	38	38	38	38	38	38	38	38	38	38	38
	90	36	36	36	36	36	36	36	36	36	36	36	36	36
Zone 2r	0	94	94	91	87	83	80	74	64	57	51	46	42	39
	10	78	78	78	78	78	78	74	64	57	51	46	42	39
	20	68	68	68	68	67	67	66	64	57	51	46	42	39
	30	58	58	58	58	58	58	58	58	57	51	46	42	39
	40	52	52	52	52	52	52	52	52	52	51	46	42	39
	50	47	47	47	47	47	47	47	47	47	47	46	42	39
	60	43	43	43	43	43	43	43	43	43	43	43	42	39
	70	41	41	41	41	41	41	41	41	41	41	41	41	39
	80	38	38	38	38	38	38	38	38	38	38	38	38	38
	90	36	36	36	36	36	36	36	36	36	36	36	36	36
Zone 3	0	94	94	94	91	87	83	79	66	57	50	45	41	37
	10	78	78	78	78	78	78	77	66	57	50	45	41	37
	20	68	68	68	68	67	67	66	65	57	50	45	41	37
	30	58	58	58	58	58	58	58	58	57	50	45	41	37
	40	52	52	52	52	52	52	52	52	52	50	45	41	37
	50	47	47	47	47	47	47	47	47	47	47	45	41	37
	60	43	43	43	43	43	43	43	43	43	43	43	41	37
	70	41	41	41	41	41	41	41	41	41	41	41	41	37
	80	38	38	38	38	38	38	38	38	38	38	38	38	37
	90	36	36	36	36	36	36	36	36	36	36	36	36	36

Notes:

1. Tables are based on critical rail span for load combinations as specified in chapter 2 of the ASCE 7-16 and allowable design loads per the 2015 Aluminum Design Manual.
2. Panels are assumed to be in portrait orientation with a maximum length of 82"

Structural ENGINUITY INC
Ingenuity in Engineering

SUNMODO®

Max Rail Spans for SunModo SMR100 System

Table 72b

Mean Roof Height: h ≤ 15 ft
Roof Angle: 27 < θ ≤ 45 degrees
Exposure Category: D

Panel Orientation: Portrait
North/South Support γ_E = 1.5
Roof Type : Hip

Roof Wind Zone	Ground Snow Load (psf)	Wind Speed (mph)												
		90	95	100	105	110	115	120	130	140	150	160	170	180
Zone 1	0	94	93	88	85	81	77	71	63	56	51	46	42	39
	10	78	78	78	78	78	77	71	63	56	51	46	42	39
	20	68	68	68	68	67	67	66	63	56	51	46	42	39
	30	58	58	58	58	58	58	58	58	56	51	46	42	39
	40	52	52	52	52	52	52	52	52	52	51	46	42	39
	50	47	47	47	47	47	47	47	47	47	47	46	42	39
	60	43	43	43	43	43	43	43	43	43	43	43	42	39
	70	41	41	41	41	41	41	41	41	41	41	41	41	39
	80	38	38	38	38	38	38	38	38	38	38	38	38	38
	90	36	36	36	36	36	36	36	36	36	36	36	36	36
Zone 2e	0	94	93	88	84	80	73	67	58	51	46	41	37	34
	10	78	78	78	78	78	73	67	58	51	46	41	37	34
	20	68	68	68	68	67	67	66	58	51	46	41	37	34
	30	58	58	58	58	58	58	58	58	51	46	41	37	34
	40	52	52	52	52	52	52	52	52	51	46	41	37	34
	50	47	47	47	47	47	47	47	47	47	46	41	37	34
	60	43	43	43	43	43	43	43	43	43	43	41	37	34
	70	41	41	41	41	41	41	41	41	41	41	41	37	34
	80	38	38	38	38	38	38	38	38	38	38	38	37	34
	90	36	36	36	36	36	36	36	36	36	36	36	36	34
Zone 2r	0	83	79	71	66	61	56	53	47	42	38	35	32	30
	10	78	78	71	66	61	56	53	47	42	38	35	32	30
	20	68	68	68	66	61	56	53	47	42	38	35	32	30
	30	58	58	58	58	58	56	53	47	42	38	35	32	30
	40	52	52	52	52	52	52	52	47	42	38	35	32	30
	50	47	47	47	47	47	47	47	47	42	38	35	32	30
	60	43	43	43	43	43	43	43	43	42	38	35	32	30
	70	41	41	41	41	41	41	41	41	41	38	35	32	30
	80	38	38	38	38	38	38	38	38	38	38	35	32	30
	90	36	36	36	36	36	36	36	36	36	36	35	32	30
Zone 3	0	87	82	75	67	61	56	52	45	40	36	33	30	28
	10	78	78	75	67	61	56	52	45	40	36	33	30	28
	20	68	68	68	67	61	56	52	45	40	36	33	30	28
	30	58	58	58	58	58	56	52	45	40	36	33	30	28
	40	52	52	52	52	52	52	52	45	40	36	33	30	28
	50	47	47	47	47	47	47	47	45	40	36	33	30	28
	60	43	43	43	43	43	43	43	43	40	36	33	30	28
	70	41	41	41	41	41	41	41	41	40	36	33	30	28
	80	38	38	38	38	38	38	38	38	38	36	33	30	28
	90	36	36	36	36	36	36	36	36	36	36	33	30	28

Notes:

1. Tables are based on critical rail span for load combinations as specified in chapter 2 of the ASCE 7-16 and allowable design loads per the 2015 Aluminum Design Manual.
2. Panels are assumed to be in portrait orientation with a maximum length of 82"

Structural ENGINUITY INC
Ingenuity in Engineering

SUNMODO®

Max Rail Spans for SunModo SMR100 System

Table 73a

Mean Roof Height: 15 < h ≤ 30 ft
Roof Angle: 0 < θ ≤ 7 degrees
Exposure Category: B

Panel Orientation: Portrait
North/South Support γ_E = 1
Roof Type : Gable

Roof Wind Zone	Ground Snow Load (psf)	Wind Speed (mph)												
		90	95	100	105	110	115	120	130	140	150	160	170	180
Zone 1'	0	94	94	94	94	94	94	94	94	94	94	94	93	87
	10	79	79	79	79	79	79	79	79	79	79	79	79	79
	20	63	63	63	63	63	63	63	63	63	63	63	63	63
	30	61	61	61	61	61	61	61	61	61	61	61	61	61
	40	54	54	54	54	54	54	54	54	54	54	54	54	54
	50	49	49	49	49	49	49	49	49	49	49	49	49	49
	60	45	45	45	45	45	45	45	45	45	45	45	45	45
	70	42	42	42	42	42	42	42	42	42	42	42	42	42
	80	39	39	39	39	39	39	39	39	39	39	39	39	39
	90	37	37	37	37	37	37	37	37	37	37	37	37	37
Zone 1	0	94	94	94	94	94	94	94	93	85	77	70	64	59
	10	79	79	79	79	79	79	79	79	79	77	70	64	59
	20	63	63	63	63	63	63	63	63	63	63	63	63	59
	30	61	61	61	61	61	61	61	61	61	61	61	61	59
	40	54	54	54	54	54	54	54	54	54	54	54	54	54
	50	49	49	49	49	49	49	49	49	49	49	49	49	49
	60	45	45	45	45	45	45	45	45	45	45	45	45	45
	70	42	42	42	42	42	42	42	42	42	42	42	42	42
	80	39	39	39	39	39	39	39	39	39	39	39	39	39
	90	37	37	37	37	37	37	37	37	37	37	37	37	37
Zone 2	0	94	94	94	94	94	90	85	75	68	62	57	52	49
	10	79	79	79	79	79	79	79	75	68	62	57	52	49
	20	63	63	63	63	63	63	63	63	63	62	57	52	49
	30	61	61	61	61	61	61	61	61	61	61	57	52	49
	40	54	54	54	54	54	54	54	54	54	54	54	52	49
	50	49	49	49	49	49	49	49	49	49	49	49	49	49
	60	45	45	45	45	45	45	45	45	45	45	45	45	45
	70	42	42	42	42	42	42	42	42	42	42	42	42	42
	80	39	39	39	39	39	39	39	39	39	39	39	39	39
	90	37	37	37	37	37	37	37	37	37	37	37	37	37
Zone 3	0	94	94	90	84	78	73	68	61	55	50	46	43	40
	10	79	79	79	79	78	73	68	61	55	50	46	43	40
	20	63	63	63	63	63	63	63	61	55	50	46	43	40
	30	61	61	61	61	61	61	61	61	55	50	46	43	40
	40	54	54	54	54	54	54	54	54	54	50	46	43	40
	50	49	49	49	49	49	49	49	49	49	49	46	43	40
	60	45	45	45	45	45	45	45	45	45	45	45	43	40
	70	42	42	42	42	42	42	42	42	42	42	42	42	40
	80	39	39	39	39	39	39	39	39	39	39	39	39	39
	90	37	37	37	37	37	37	37	37	37	37	37	37	37

Notes:

1. Tables are based on critical rail span for load combinations as specified in chapter 2 of the ASCE 7-16 and allowable design loads per the 2015 Aluminum Design Manual.
2. Panels are assumed to be in portrait orientation with a maximum length of 82"

Structural ENGINUITY INC
Ingenuity in Engineering

SUNMODO®

Max Rail Spans for SunModo SMR100 System

Table 73b

Mean Roof Height: 15 < h ≤ 30 ft
Roof Angle: 0 < θ ≤ 7 degrees
Exposure Category: B

Panel Orientation: Portrait
North/South Support γ_E = 1.5
Roof Type : Gable

Roof Wind Zone	Ground Snow Load (psf)	Wind Speed (mph)												
		90	95	100	105	110	115	120	130	140	150	160	170	180
Zone 1'	0	94	94	94	94	94	94	94	94	92	84	77	71	66
	10	79	79	79	79	79	79	79	79	79	79	77	71	66
	20	63	63	63	63	63	63	63	63	63	63	63	63	63
	30	61	61	61	61	61	61	61	61	61	61	61	61	61
	40	54	54	54	54	54	54	54	54	54	54	54	54	54
	50	49	49	49	49	49	49	49	49	49	49	49	49	49
	60	45	45	45	45	45	45	45	45	45	45	45	45	45
	70	42	42	42	42	42	42	42	42	42	42	42	42	42
	80	39	39	39	39	39	39	39	39	39	39	39	39	39
	90	37	37	37	37	37	37	37	37	37	37	37	37	37
Zone 1	0	94	94	94	94	90	84	79	70	64	58	53	49	46
	10	79	79	79	79	79	79	79	70	64	58	53	49	46
	20	63	63	63	63	63	63	63	63	63	58	53	49	46
	30	61	61	61	61	61	61	61	61	61	58	53	49	46
	40	54	54	54	54	54	54	54	54	54	54	53	49	46
	50	49	49	49	49	49	49	49	49	49	49	49	49	46
	60	45	45	45	45	45	45	45	45	45	45	45	45	45
	70	42	42	42	42	42	42	42	42	42	42	42	42	42
	80	39	39	39	39	39	39	39	39	39	39	39	39	39
	90	37	37	37	37	37	37	37	37	37	37	37	37	37
Zone 2	0	94	89	82	77	72	67	64	57	52	47	44	40	38
	10	79	79	79	77	72	67	64	57	52	47	44	40	38
	20	63	63	63	63	63	63	63	57	52	47	44	40	38
	30	61	61	61	61	61	61	61	57	52	47	44	40	38
	40	54	54	54	54	54	54	54	54	52	47	44	40	38
	50	49	49	49	49	49	49	49	49	49	47	44	40	38
	60	45	45	45	45	45	45	45	45	45	45	44	40	38
	70	42	42	42	42	42	42	42	42	42	42	42	40	38
	80	39	39	39	39	39	39	39	39	39	39	39	39	38
	90	37	37	37	37	37	37	37	37	37	37	37	37	37
Zone 3	0	78	72	67	62	58	55	52	46	42	39	35	33	31
	10	78	72	67	62	58	55	52	46	42	39	35	33	31
	20	63	63	63	62	58	55	52	46	42	39	35	33	31
	30	61	61	61	61	58	55	52	46	42	39	35	33	31
	40	54	54	54	54	54	54	52	46	42	39	35	33	31
	50	49	49	49	49	49	49	49	46	42	39	35	33	31
	60	45	45	45	45	45	45	45	45	42	39	35	33	31
	70	42	42	42	42	42	42	42	42	42	39	35	33	31
	80	39	39	39	39	39	39	39	39	39	39	35	33	31
	90	37	37	37	37	37	37	37	37	37	37	35	33	31

Notes:

1. Tables are based on critical rail span for load combinations as specified in chapter 2 of the ASCE 7-16 and allowable design loads per the 2015 Aluminum Design Manual.
2. Panels are assumed to be in portrait orientation with a maximum length of 82"

Structural ENGINUITY INC
Ingenuity in Engineering

SUNMODO®

Max Rail Spans for SunModo SMR100 System

Table 74a

Mean Roof Height: 15 < h ≤ 30 ft
Roof Angle: 0 < θ ≤ 7 degrees
Exposure Category: C

Panel Orientation: Portrait
North/South Support γ_E = 1
Roof Type : Gable

Roof Wind Zone	Ground Snow Load (psf)	Wind Speed (mph)												
		90	95	100	105	110	115	120	130	140	150	160	170	180
Zone 1'	0	94	94	94	94	94	94	94	94	94	89	81	75	69
	10	79	79	79	79	79	79	79	79	79	79	79	75	69
	20	63	63	63	63	63	63	63	63	63	63	63	63	63
	30	61	61	61	61	61	61	61	61	61	61	61	61	61
	40	54	54	54	54	54	54	54	54	54	54	54	54	54
	50	49	49	49	49	49	49	49	49	49	49	49	49	49
	60	45	45	45	45	45	45	45	45	45	45	45	45	45
	70	42	42	42	42	42	42	42	42	42	42	42	42	42
	80	39	39	39	39	39	39	39	39	39	39	39	39	39
	90	37	37	37	37	37	37	37	37	37	37	37	37	37
Zone 1	0	94	94	94	94	93	88	83	74	67	61	56	51	48
	10	79	79	79	79	79	79	79	74	67	61	56	51	48
	20	63	63	63	63	63	63	63	63	63	61	56	51	48
	30	61	61	61	61	61	61	61	61	61	61	56	51	48
	40	54	54	54	54	54	54	54	54	54	54	54	51	48
	50	49	49	49	49	49	49	49	49	49	49	49	49	48
	60	45	45	45	45	45	45	45	45	45	45	45	45	45
	70	42	42	42	42	42	42	42	42	42	42	42	42	42
	80	39	39	39	39	39	39	39	39	39	39	39	39	39
	90	37	37	37	37	37	37	37	37	37	37	37	37	37
Zone 2	0	94	93	87	81	75	71	67	60	54	50	46	42	39
	10	79	79	79	79	75	71	67	60	54	50	46	42	39
	20	63	63	63	63	63	63	63	60	54	50	46	42	39
	30	61	61	61	61	61	61	61	60	54	50	46	42	39
	40	54	54	54	54	54	54	54	54	54	50	46	42	39
	50	49	49	49	49	49	49	49	49	49	49	46	42	39
	60	45	45	45	45	45	45	45	45	45	45	45	42	39
	70	42	42	42	42	42	42	42	42	42	42	42	42	39
	80	39	39	39	39	39	39	39	39	39	39	39	39	39
	90	37	37	37	37	37	37	37	37	37	37	37	37	37
Zone 3	0	82	75	70	65	61	57	54	49	44	40	37	34	32
	10	79	75	70	65	61	57	54	49	44	40	37	34	32
	20	63	63	63	63	61	57	54	49	44	40	37	34	32
	30	61	61	61	61	61	57	54	49	44	40	37	34	32
	40	54	54	54	54	54	54	54	49	44	40	37	34	32
	50	49	49	49	49	49	49	49	49	44	40	37	34	32
	60	45	45	45	45	45	45	45	45	44	40	37	34	32
	70	42	42	42	42	42	42	42	42	42	40	37	34	32
	80	39	39	39	39	39	39	39	39	39	39	37	34	32
	90	37	37	37	37	37	37	37	37	37	37	37	34	32

Notes:

1. Tables are based on critical rail span for load combinations as specified in chapter 2 of the ASCE 7-16 and allowable design loads per the 2015 Aluminum Design Manual.
2. Panels are assumed to be in portrait orientation with a maximum length of 82"

Structural ENGINUITY INC
Ingenuity in Engineering

SUNMODO®

Max Rail Spans for SunModo SMR100 System

Table 74b

Mean Roof Height: 15 < h ≤ 30 ft
Roof Angle: 0 < θ ≤ 7 degrees
Exposure Category: C

Panel Orientation: Portrait
North/South Support γ_E = 1.5
Roof Type : Gable

Roof Wind Zone	Ground Snow Load (psf)	Wind Speed (mph)												
		90	95	100	105	110	115	120	130	140	150	160	170	180
Zone 1'	0	94	94	94	94	94	94	91	82	74	68	62	58	54
	10	79	79	79	79	79	79	79	79	74	68	62	58	54
	20	63	63	63	63	63	63	63	63	63	63	62	58	54
	30	61	61	61	61	61	61	61	61	61	61	61	58	54
	40	54	54	54	54	54	54	54	54	54	54	54	54	54
	50	49	49	49	49	49	49	49	49	49	49	49	49	49
	60	45	45	45	45	45	45	45	45	45	45	45	45	45
	70	42	42	42	42	42	42	42	42	42	42	42	42	42
	80	39	39	39	39	39	39	39	39	39	39	39	39	39
	90	37	37	37	37	37	37	37	37	37	37	37	37	37
Zone 1	0	93	87	81	75	70	66	62	56	51	46	43	40	37
	10	79	79	79	75	70	66	62	56	51	46	43	40	37
	20	63	63	63	63	63	63	62	56	51	46	43	40	37
	30	61	61	61	61	61	61	61	56	51	46	43	40	37
	40	54	54	54	54	54	54	54	54	51	46	43	40	37
	50	49	49	49	49	49	49	49	49	49	46	43	40	37
	60	45	45	45	45	45	45	45	45	45	45	43	40	37
	70	42	42	42	42	42	42	42	42	42	42	42	40	37
	80	39	39	39	39	39	39	39	39	39	39	39	39	37
	90	37	37	37	37	37	37	37	37	37	37	37	37	37
Zone 2	0	75	70	65	61	57	54	51	46	42	38	35	33	31
	10	75	70	65	61	57	54	51	46	42	38	35	33	31
	20	63	63	63	61	57	54	51	46	42	38	35	33	31
	30	61	61	61	61	57	54	51	46	42	38	35	33	31
	40	54	54	54	54	54	54	51	46	42	38	35	33	31
	50	49	49	49	49	49	49	49	46	42	38	35	33	31
	60	45	45	45	45	45	45	45	45	42	38	35	33	31
	70	42	42	42	42	42	42	42	42	42	38	35	33	31
	80	39	39	39	39	39	39	39	39	39	38	35	33	31
	90	37	37	37	37	37	37	37	37	37	37	35	33	31
Zone 3	0	61	56	53	49	46	44	41	37	34	32	30	28	26
	10	61	56	53	49	46	44	41	37	34	32	30	28	26
	20	61	56	53	49	46	44	41	37	34	32	30	28	26
	30	61	56	53	49	46	44	41	37	34	32	30	28	26
	40	54	54	53	49	46	44	41	37	34	32	30	28	26
	50	49	49	49	49	46	44	41	37	34	32	30	28	26
	60	45	45	45	45	45	44	41	37	34	32	30	28	26
	70	42	42	42	42	42	42	41	37	34	32	30	28	26
	80	39	39	39	39	39	39	39	37	34	32	30	28	26
	90	37	37	37	37	37	37	37	37	34	32	30	28	26

Notes:

1. Tables are based on critical rail span for load combinations as specified in chapter 2 of the ASCE 7-16 and allowable design loads per the 2015 Aluminum Design Manual.
2. Panels are assumed to be in portrait orientation with a maximum length of 82"

Structural ENGINUITY INC
Ingenuity in Engineering

SUNMODO®

Max Rail Spans for SunModo SMR100 System

Table 75a

Mean Roof Height: 15 < h ≤ 30 ft
Roof Angle: 0 < θ ≤ 7 degrees
Exposure Category: D

Panel Orientation: Portrait
North/South Support γ_E = 1
Roof Type : Gable

Roof Wind Zone	Ground Snow Load (psf)	Wind Speed (mph)												
		90	95	100	105	110	115	120	130	140	150	160	170	180
Zone 1'	0	94	94	94	94	94	94	94	94	87	79	72	67	62
	10	79	79	79	79	79	79	79	79	79	79	72	67	62
	20	63	63	63	63	63	63	63	63	63	63	63	62	61
	30	61	61	61	61	61	61	61	61	61	61	61	61	60
	40	54	54	54	54	54	54	54	54	54	54	54	54	54
	50	49	49	49	49	49	49	49	49	49	49	49	49	49
	60	45	45	45	45	45	45	45	45	45	45	45	45	45
	70	42	42	42	42	42	42	42	42	42	42	42	42	42
	80	39	39	39	39	39	39	39	39	39	39	39	39	39
	90	37	37	37	37	37	37	37	37	37	37	37	37	37
Zone 1	0	94	94	94	89	83	78	73	66	59	54	50	46	43
	10	79	79	79	79	79	78	73	66	59	54	50	46	43
	20	63	63	63	63	63	63	63	63	59	54	50	46	43
	30	61	61	61	61	61	61	61	61	59	54	50	46	43
	40	54	54	54	54	54	54	54	54	54	54	50	46	43
	50	49	49	49	49	49	49	49	49	49	49	49	46	43
	60	45	45	45	45	45	45	45	45	45	45	45	45	43
	70	42	42	42	42	42	42	42	42	42	42	42	42	42
	80	39	39	39	39	39	39	39	39	39	39	39	39	39
	90	37	37	37	37	37	37	37	37	37	37	37	37	37
Zone 2	0	89	82	77	71	67	63	59	53	49	44	41	38	35
	10	79	79	77	71	67	63	59	53	49	44	41	38	35
	20	63	63	63	63	63	63	59	53	49	44	41	38	35
	30	61	61	61	61	61	61	59	53	49	44	41	38	35
	40	54	54	54	54	54	54	54	53	49	44	41	38	35
	50	49	49	49	49	49	49	49	49	49	44	41	38	35
	60	45	45	45	45	45	45	45	45	45	44	41	38	35
	70	42	42	42	42	42	42	42	42	42	42	41	38	35
	80	39	39	39	39	39	39	39	39	39	39	39	38	35
	90	37	37	37	37	37	37	37	37	37	37	37	37	35
Zone 3	0	72	67	62	58	54	51	48	44	40	36	34	31	30
	10	72	67	62	58	54	51	48	44	40	36	34	31	30
	20	63	63	62	58	54	51	48	44	40	36	34	31	30
	30	61	61	61	58	54	51	48	44	40	36	34	31	30
	40	54	54	54	54	54	51	48	44	40	36	34	31	30
	50	49	49	49	49	49	49	48	44	40	36	34	31	30
	60	45	45	45	45	45	45	45	44	40	36	34	31	30
	70	42	42	42	42	42	42	42	42	40	36	34	31	30
	80	39	39	39	39	39	39	39	39	39	36	34	31	30
	90	37	37	37	37	37	37	37	37	37	36	34	31	30

Notes:

1. Tables are based on critical rail span for load combinations as specified in chapter 2 of the ASCE 7-16 and allowable design loads per the 2015 Aluminum Design Manual.
2. Panels are assumed to be in portrait orientation with a maximum length of 82"

Structural ENGINUITY INC
Ingenuity in Engineering

SUNMODO®

Max Rail Spans for SunModo SMR100 System

Table 75b

Mean Roof Height: 15 < h ≤ 30 ft
Roof Angle: 0 < θ ≤ 7 degrees
Exposure Category: D

Panel Orientation: Portrait
North/South Support γ_E = 1.5
Roof Type : Gable

Roof Wind Zone	Ground Snow Load (psf)	Wind Speed (mph)												
		90	95	100	105	110	115	120	130	140	150	160	170	180
Zone 1'	0	94	94	94	94	91	86	81	73	66	61	56	52	48
	10	79	79	79	79	79	79	79	73	66	61	56	52	48
	20	63	63	63	63	63	63	63	63	63	61	56	52	48
	30	61	61	61	61	61	61	61	61	61	61	56	52	48
	40	54	54	54	54	54	54	54	54	54	54	54	52	48
	50	49	49	49	49	49	49	49	49	49	49	49	49	48
	60	45	45	45	45	45	45	45	45	45	45	45	45	45
	70	42	42	42	42	42	42	42	42	42	42	42	42	42
	80	39	39	39	39	39	39	39	39	39	39	39	39	39
	90	37	37	37	37	37	37	37	37	37	37	37	37	37
Zone 1	0	83	77	71	67	63	59	56	50	46	42	38	36	33
	10	79	77	71	67	63	59	56	50	46	42	38	36	33
	20	63	63	63	63	63	59	56	50	46	42	38	36	33
	30	61	61	61	61	61	59	56	50	46	42	38	36	33
	40	54	54	54	54	54	54	54	50	46	42	38	36	33
	50	49	49	49	49	49	49	49	49	46	42	38	36	33
	60	45	45	45	45	45	45	45	45	45	42	38	36	33
	70	42	42	42	42	42	42	42	42	42	42	38	36	33
	80	39	39	39	39	39	39	39	39	39	39	38	36	33
	90	37	37	37	37	37	37	37	37	37	37	37	36	33
Zone 2	0	67	62	58	54	51	48	46	41	38	34	32	30	29
	10	67	62	58	54	51	48	46	41	38	34	32	30	29
	20	63	62	58	54	51	48	46	41	38	34	32	30	29
	30	61	61	58	54	51	48	46	41	38	34	32	30	29
	40	54	54	54	54	51	48	46	41	38	34	32	30	29
	50	49	49	49	49	49	48	46	41	38	34	32	30	29
	60	45	45	45	45	45	45	45	41	38	34	32	30	29
	70	42	42	42	42	42	42	42	41	38	34	32	30	29
	80	39	39	39	39	39	39	39	39	38	34	32	30	29
	90	37	37	37	37	37	37	37	37	37	34	32	30	29
Zone 3	0	54	50	47	44	42	39	37	34	31	29	27	26	24
	10	54	50	47	44	42	39	37	34	31	29	27	26	24
	20	54	50	47	44	42	39	37	34	31	29	27	26	24
	30	54	50	47	44	42	39	37	34	31	29	27	26	24
	40	54	50	47	44	42	39	37	34	31	29	27	26	24
	50	49	49	47	44	42	39	37	34	31	29	27	26	24
	60	45	45	45	44	42	39	37	34	31	29	27	26	24
	70	42	42	42	42	42	39	37	34	31	29	27	26	24
	80	39	39	39	39	39	39	37	34	31	29	27	26	24
	90	37	37	37	37	37	37	37	34	31	29	27	26	24

Notes:

1. Tables are based on critical rail span for load combinations as specified in chapter 2 of the ASCE 7-16 and allowable design loads per the 2015 Aluminum Design Manual.
2. Panels are assumed to be in portrait orientation with a maximum length of 82"

Structural ENGINUITY INC
Ingenuity in Engineering

SUNMODO®

Max Rail Spans for SunModo SMR100 System

Table 76a

Mean Roof Height: 15 < h ≤ 30 ft
Roof Angle: 7 < θ ≤ 20 degrees
Exposure Category: B

Panel Orientation: Portrait
North/South Support γ_E = 1
Roof Type : Gable

Roof Wind Zone	Ground Snow Load (psf)	Wind Speed (mph)												
		90	95	100	105	110	115	120	130	140	150	160	170	180
Zones 1 & 2e	0	94	94	94	94	94	94	94	85	73	66	60	56	52
	10	73	73	73	73	73	73	73	73	73	66	60	56	52
	20	56	56	56	56	56	56	56	56	56	56	56	56	52
	30	56	56	56	56	56	56	56	56	56	56	56	56	52
	40	50	50	50	50	50	50	50	50	50	50	50	50	50
	50	45	45	45	45	45	45	45	45	45	45	45	45	45
	60	42	42	42	42	42	42	42	42	42	42	42	42	42
	70	39	39	39	39	39	39	39	39	39	39	39	39	39
	80	36	36	36	36	36	36	36	36	36	36	36	36	36
	90	34	34	34	34	34	34	34	34	34	34	34	34	34
Zones 2n, 2r, & 3e	0	94	94	94	92	88	81	76	67	60	54	49	45	42
	10	73	73	73	73	73	73	73	67	60	54	49	45	42
	20	56	56	56	56	56	56	56	56	56	54	49	45	42
	30	56	56	56	56	56	56	56	56	56	54	49	45	42
	40	50	50	50	50	50	50	50	50	50	50	49	45	42
	50	45	45	45	45	45	45	45	45	45	45	45	45	42
	60	42	42	42	42	42	42	42	42	42	42	42	42	42
	70	39	39	39	39	39	39	39	39	39	39	39	39	39
	80	36	36	36	36	36	36	36	36	36	36	36	36	36
	90	34	34	34	34	34	34	34	34	34	34	34	34	34
Zone 3r	0	94	93	89	82	76	71	66	58	52	48	43	40	37
	10	73	73	73	73	73	71	66	58	52	48	43	40	37
	20	56	56	56	56	56	56	56	56	52	48	43	40	37
	30	56	56	56	56	56	56	56	56	52	48	43	40	37
	40	50	50	50	50	50	50	50	50	50	48	43	40	37
	50	45	45	45	45	45	45	45	45	45	45	43	40	37
	60	42	42	42	42	42	42	42	42	42	42	42	40	37
	70	39	39	39	39	39	39	39	39	39	39	39	39	37
	80	36	36	36	36	36	36	36	36	36	36	36	36	36
	90	34	34	34	34	34	34	34	34	34	34	34	34	34

Notes:

1. Tables are based on critical rail span for load combinations as specified in chapter 2 of the ASCE 7-16 and allowable design loads per the 2015 Aluminum Design Manual.
2. Panels are assumed to be in portrait orientation with a maximum length of 82"

Structural ENGINUITY INC
Ingenuity in Engineering

SUNMODO®

Max Rail Spans for SunModo SMR100 System

Table 76b

Mean Roof Height: 15 < h ≤ 30 ft
Roof Angle: 7 < θ ≤ 20 degrees
Exposure Category: B

Panel Orientation: Portrait
North/South Support γ_E = 1.5
Roof Type : Gable

Roof Wind Zone	Ground Snow Load (psf)	Wind Speed (mph)												
		90	95	100	105	110	115	120	130	140	150	160	170	180
Zones 1 & 2e	0	94	94	92	87	79	72	68	61	55	51	47	44	41
	10	73	73	73	73	73	72	68	61	55	51	47	44	41
	20	56	56	56	56	56	56	56	56	55	51	47	44	41
	30	56	56	56	56	56	56	56	56	55	51	47	44	41
	40	50	50	50	50	50	50	50	50	50	50	47	44	41
	50	45	45	45	45	45	45	45	45	45	45	45	44	41
	60	42	42	42	42	42	42	42	42	42	42	42	42	41
	70	39	39	39	39	39	39	39	39	39	39	39	39	39
	80	36	36	36	36	36	36	36	36	36	36	36	36	36
	90	34	34	34	34	34	34	34	34	34	34	34	34	34
Zones 2n, 2r, & 3e	0	88	80	73	68	63	59	56	50	45	41	37	34	32
	10	73	73	73	68	63	59	56	50	45	41	37	34	32
	20	56	56	56	56	56	56	56	50	45	41	37	34	32
	30	56	56	56	56	56	56	56	50	45	41	37	34	32
	40	50	50	50	50	50	50	50	50	45	41	37	34	32
	50	45	45	45	45	45	45	45	45	45	41	37	34	32
	60	42	42	42	42	42	42	42	42	42	41	37	34	32
	70	39	39	39	39	39	39	39	39	39	39	37	34	32
	80	36	36	36	36	36	36	36	36	36	36	36	34	32
	90	34	34	34	34	34	34	34	34	34	34	34	34	32
Zone 3r	0	76	69	64	59	55	52	49	44	39	36	33	31	29
	10	73	69	64	59	55	52	49	44	39	36	33	31	29
	20	56	56	56	56	55	52	49	44	39	36	33	31	29
	30	56	56	56	56	55	52	49	44	39	36	33	31	29
	40	50	50	50	50	50	50	49	44	39	36	33	31	29
	50	45	45	45	45	45	45	45	44	39	36	33	31	29
	60	42	42	42	42	42	42	42	42	39	36	33	31	29
	70	39	39	39	39	39	39	39	39	39	36	33	31	29
	80	36	36	36	36	36	36	36	36	36	36	33	31	29
	90	34	34	34	34	34	34	34	34	34	34	33	31	29

Notes:

1. Tables are based on critical rail span for load combinations as specified in chapter 2 of the ASCE 7-16 and allowable design loads per the 2015 Aluminum Design Manual.
2. Panels are assumed to be in portrait orientation with a maximum length of 82"

Structural ENGINUITY INC
Ingenuity in Engineering

SUNMODO®

Max Rail Spans for SunModo SMR100 System

Table 77a

Mean Roof Height: 15 < h ≤ 30 ft
Roof Angle: 7 < θ ≤ 20 degrees
Exposure Category: C

Panel Orientation: Portrait
North/South Support γ_E = 1
Roof Type : Gable

Roof Wind Zone	Ground Snow Load (psf)	Wind Speed (mph)												
		90	95	100	105	110	115	120	130	140	150	160	170	180
Zones 1 & 2e	0	94	94	94	91	85	77	71	64	58	53	49	46	43
	10	73	73	73	73	73	73	71	64	58	53	49	46	43
	20	56	56	56	56	56	56	56	56	56	53	49	46	43
	30	56	56	56	56	56	56	56	56	56	53	49	46	43
	40	50	50	50	50	50	50	50	50	50	50	49	46	43
	50	45	45	45	45	45	45	45	45	45	45	45	45	43
	60	42	42	42	42	42	42	42	42	42	42	42	42	42
	70	39	39	39	39	39	39	39	39	39	39	39	39	39
	80	36	36	36	36	36	36	36	36	36	36	36	36	36
	90	34	34	34	34	34	34	34	34	34	34	34	34	34
Zones 2n, 2r, & 3e	0	91	85	78	72	67	62	59	52	47	43	39	36	34
	10	73	73	73	72	67	62	59	52	47	43	39	36	34
	20	56	56	56	56	56	56	56	52	47	43	39	36	34
	30	56	56	56	56	56	56	56	52	47	43	39	36	34
	40	50	50	50	50	50	50	50	50	47	43	39	36	34
	50	45	45	45	45	45	45	45	45	45	43	39	36	34
	60	42	42	42	42	42	42	42	42	42	42	39	36	34
	70	39	39	39	39	39	39	39	39	39	39	39	36	34
	80	36	36	36	36	36	36	36	36	36	36	36	36	34
	90	34	34	34	34	34	34	34	34	34	34	34	34	34
Zone 3r	0	80	73	68	63	58	55	51	46	41	38	35	32	31
	10	73	73	68	63	58	55	51	46	41	38	35	32	31
	20	56	56	56	56	56	55	51	46	41	38	35	32	31
	30	56	56	56	56	56	55	51	46	41	38	35	32	31
	40	50	50	50	50	50	50	50	46	41	38	35	32	31
	50	45	45	45	45	45	45	45	45	41	38	35	32	31
	60	42	42	42	42	42	42	42	42	41	38	35	32	31
	70	39	39	39	39	39	39	39	39	39	38	35	32	31
	80	36	36	36	36	36	36	36	36	36	36	35	32	31
	90	34	34	34	34	34	34	34	34	34	34	34	32	31

Notes:

1. Tables are based on critical rail span for load combinations as specified in chapter 2 of the ASCE 7-16 and allowable design loads per the 2015 Aluminum Design Manual.
2. Panels are assumed to be in portrait orientation with a maximum length of 82"

Structural ENGINUITY INC
Ingenuity in Engineering

SUNMODO®

Max Rail Spans for SunModo SMR100 System

Table 77b

Mean Roof Height: 15 < h ≤ 30 ft
Roof Angle: 7 < θ ≤ 20 degrees
Exposure Category: C

Panel Orientation: Portrait
North/South Support γ_E = 1.5
Roof Type : Gable

Roof Wind Zone	Ground Snow Load (psf)	Wind Speed (mph)												
		90	95	100	105	110	115	120	130	140	150	160	170	180
Zones 1 & 2e	0	85	76	69	65	61	57	54	49	45	41	38	36	34
	10	73	73	69	65	61	57	54	49	45	41	38	36	34
	20	56	56	56	56	56	56	54	49	45	41	38	36	34
	30	56	56	56	56	56	56	54	49	45	41	38	36	34
	40	50	50	50	50	50	50	50	49	45	41	38	36	34
	50	45	45	45	45	45	45	45	45	45	41	38	36	34
	60	42	42	42	42	42	42	42	42	42	41	38	36	34
	70	39	39	39	39	39	39	39	39	39	39	38	36	34
	80	36	36	36	36	36	36	36	36	36	36	36	36	34
	90	34	34	34	34	34	34	34	34	34	34	34	34	34
Zones 2n, 2r, & 3e	0	67	61	57	53	49	46	44	39	35	33	31	29	27
	10	67	61	57	53	49	46	44	39	35	33	31	29	27
	20	56	56	56	53	49	46	44	39	35	33	31	29	27
	30	56	56	56	53	49	46	44	39	35	33	31	29	27
	40	50	50	50	50	49	46	44	39	35	33	31	29	27
	50	45	45	45	45	45	45	44	39	35	33	31	29	27
	60	42	42	42	42	42	42	42	39	35	33	31	29	27
	70	39	39	39	39	39	39	39	39	35	33	31	29	27
	80	36	36	36	36	36	36	36	36	35	33	31	29	27
	90	34	34	34	34	34	34	34	34	34	33	31	29	27
Zone 3r	0	58	54	50	47	44	41	39	35	32	30	28	26	25
	10	58	54	50	47	44	41	39	35	32	30	28	26	25
	20	56	54	50	47	44	41	39	35	32	30	28	26	25
	30	56	54	50	47	44	41	39	35	32	30	28	26	25
	40	50	50	50	47	44	41	39	35	32	30	28	26	25
	50	45	45	45	45	44	41	39	35	32	30	28	26	25
	60	42	42	42	42	42	41	39	35	32	30	28	26	25
	70	39	39	39	39	39	39	39	35	32	30	28	26	25
	80	36	36	36	36	36	36	36	35	32	30	28	26	25
	90	34	34	34	34	34	34	34	34	32	30	28	26	25

Notes:

1. Tables are based on critical rail span for load combinations as specified in chapter 2 of the ASCE 7-16 and allowable design loads per the 2015 Aluminum Design Manual.
2. Panels are assumed to be in portrait orientation with a maximum length of 82"

Structural ENGINUITY INC
Ingenuity in Engineering

SUNMODO®

Max Rail Spans for SunModo SMR100 System

Table 78a

Mean Roof Height: 15 < h ≤ 30 ft
Roof Angle: 7 < θ ≤ 20 degrees
Exposure Category: D

Panel Orientation: Portrait
North/South Support γ_E = 1
Roof Type : Gable

Roof Wind Zone	Ground Snow Load (psf)	Wind Speed (mph)												
		90	95	100	105	110	115	120	130	140	150	160	170	180
Zones 1 & 2e	0	94	93	87	78	71	67	63	57	52	48	44	41	38
	10	73	73	73	73	71	67	63	57	52	48	44	41	38
	20	56	56	56	56	56	56	56	56	52	48	44	41	38
	30	56	56	56	56	56	56	56	56	52	48	44	41	38
	40	50	50	50	50	50	50	50	50	50	48	44	41	38
	50	45	45	45	45	45	45	45	45	45	45	44	41	38
	60	42	42	42	42	42	42	42	42	42	42	42	41	38
	70	39	39	39	39	39	39	39	39	39	39	39	39	38
	80	36	36	36	36	36	36	36	36	36	36	36	36	36
	90	34	34	34	34	34	34	34	34	34	34	34	34	34
Zones 2n, 2r, & 3e	0	80	74	68	63	59	55	52	46	42	38	35	33	31
	10	73	73	68	63	59	55	52	46	42	38	35	33	31
	20	56	56	56	56	56	55	52	46	42	38	35	33	31
	30	56	56	56	56	56	55	52	46	42	38	35	33	31
	40	50	50	50	50	50	50	50	46	42	38	35	33	31
	50	45	45	45	45	45	45	45	45	42	38	35	33	31
	60	42	42	42	42	42	42	42	42	42	38	35	33	31
	70	39	39	39	39	39	39	39	39	39	38	35	33	31
	80	36	36	36	36	36	36	36	36	36	36	35	33	31
	90	34	34	34	34	34	34	34	34	34	34	34	33	31
Zone 3r	0	70	64	59	55	52	48	46	41	37	34	32	30	28
	10	70	64	59	55	52	48	46	41	37	34	32	30	28
	20	56	56	56	55	52	48	46	41	37	34	32	30	28
	30	56	56	56	55	52	48	46	41	37	34	32	30	28
	40	50	50	50	50	50	48	46	41	37	34	32	30	28
	50	45	45	45	45	45	45	45	41	37	34	32	30	28
	60	42	42	42	42	42	42	42	41	37	34	32	30	28
	70	39	39	39	39	39	39	39	39	37	34	32	30	28
	80	36	36	36	36	36	36	36	36	36	34	32	30	28
	90	34	34	34	34	34	34	34	34	34	34	32	30	28

Notes:

1. Tables are based on critical rail span for load combinations as specified in chapter 2 of the ASCE 7-16 and allowable design loads per the 2015 Aluminum Design Manual.
2. Panels are assumed to be in portrait orientation with a maximum length of 82"

Structural ENGINUITY INC
Ingenuity in Engineering

SUNMODO®

Max Rail Spans for SunModo SMR100 System

Table 78b

Mean Roof Height: 15 < h ≤ 30 ft
Roof Angle: 7 < θ ≤ 20 degrees
Exposure Category: D

Panel Orientation: Portrait
North/South Support γ_E = 1.5
Roof Type : Gable

Roof Wind Zone	Ground Snow Load (psf)	Wind Speed (mph)												
		90	95	100	105	110	115	120	130	140	150	160	170	180
Zones 1 & 2e	0	71	66	62	58	55	52	49	45	41	38	35	33	31
	10	71	66	62	58	55	52	49	45	41	38	35	33	31
	20	56	56	56	56	55	52	49	45	41	38	35	33	31
	30	56	56	56	56	55	52	49	45	41	38	35	33	31
	40	50	50	50	50	50	50	49	45	41	38	35	33	31
	50	45	45	45	45	45	45	45	45	41	38	35	33	31
	60	42	42	42	42	42	42	42	42	41	38	35	33	31
	70	39	39	39	39	39	39	39	39	39	38	35	33	31
	80	36	36	36	36	36	36	36	36	36	36	35	33	31
	90	34	34	34	34	34	34	34	34	34	34	34	33	31
Zones 2n, 2r, & 3e	0	59	54	50	47	44	41	39	35	32	30	28	26	25
	10	59	54	50	47	44	41	39	35	32	30	28	26	25
	20	56	54	50	47	44	41	39	35	32	30	28	26	25
	30	56	54	50	47	44	41	39	35	32	30	28	26	25
	40	50	50	50	47	44	41	39	35	32	30	28	26	25
	50	45	45	45	45	44	41	39	35	32	30	28	26	25
	60	42	42	42	42	42	41	39	35	32	30	28	26	25
	70	39	39	39	39	39	39	39	35	32	30	28	26	25
	80	36	36	36	36	36	36	36	35	32	30	28	26	25
	90	34	34	34	34	34	34	34	34	32	30	28	26	25
Zone 3r	0	51	48	44	41	39	37	35	32	29	27	26	24	23
	10	51	48	44	41	39	37	35	32	29	27	26	24	23
	20	51	48	44	41	39	37	35	32	29	27	26	24	23
	30	51	48	44	41	39	37	35	32	29	27	26	24	23
	40	50	48	44	41	39	37	35	32	29	27	26	24	23
	50	45	45	44	41	39	37	35	32	29	27	26	24	23
	60	42	42	42	41	39	37	35	32	29	27	26	24	23
	70	39	39	39	39	39	37	35	32	29	27	26	24	23
	80	36	36	36	36	36	36	35	32	29	27	26	24	23
	90	34	34	34	34	34	34	34	32	29	27	26	24	23

Notes:

1. Tables are based on critical rail span for load combinations as specified in chapter 2 of the ASCE 7-16 and allowable design loads per the 2015 Aluminum Design Manual.
2. Panels are assumed to be in portrait orientation with a maximum length of 82"

Structural ENGINUITY INC
Ingenuity in Engineering

SUNMODO®

Max Rail Spans for SunModo SMR100 System

Table 79a

Mean Roof Height: 15 < h ≤ 30 ft
Roof Angle: 20 < θ ≤ 27 degrees
Exposure Category: B

Panel Orientation: Portrait
North/South Support γ_E = 1
Roof Type : Gable

Roof Wind Zone	Ground Snow Load (psf)	Wind Speed (mph)												
		90	95	100	105	110	115	120	130	140	150	160	170	180
Zones 1 & 2e	0	94	94	94	94	94	94	94	94	89	83	75	68	63
	10	79	79	79	79	79	79	79	79	79	79	75	68	63
	20	66	66	66	66	66	66	66	66	66	66	65	64	63
	30	56	56	56	56	56	56	56	56	56	56	56	56	56
	40	50	50	50	50	50	50	50	50	50	50	50	50	50
	50	45	45	45	45	45	45	45	45	45	45	45	45	45
	60	42	42	42	42	42	42	42	42	42	42	42	42	42
	70	39	39	39	39	39	39	39	39	39	39	39	39	39
	80	36	36	36	36	36	36	36	36	36	36	36	36	36
	90	35	35	35	35	35	35	35	35	35	35	35	35	35
Zones 2n, 2r, & 3e	0	94	94	94	94	94	91	87	78	69	62	56	52	48
	10	79	79	79	79	79	79	79	78	69	62	56	52	48
	20	66	66	66	66	66	66	66	66	66	62	56	52	48
	30	56	56	56	56	56	56	56	56	56	56	56	52	48
	40	50	50	50	50	50	50	50	50	50	50	50	50	48
	50	45	45	45	45	45	45	45	45	45	45	45	45	45
	60	42	42	42	42	42	42	42	42	42	42	42	42	42
	70	39	39	39	39	39	39	39	39	39	39	39	39	39
	80	36	36	36	36	36	36	36	36	36	36	36	36	36
	90	35	35	35	35	35	35	35	35	35	35	35	35	35
Zone 3r	0	94	94	94	94	90	86	82	71	63	56	51	46	43
	10	79	79	79	79	79	79	79	71	63	56	51	46	43
	20	66	66	66	66	66	66	66	66	63	56	51	46	43
	30	56	56	56	56	56	56	56	56	56	56	51	46	43
	40	50	50	50	50	50	50	50	50	50	50	50	46	43
	50	45	45	45	45	45	45	45	45	45	45	45	45	43
	60	42	42	42	42	42	42	42	42	42	42	42	42	42
	70	39	39	39	39	39	39	39	39	39	39	39	39	39
	80	36	36	36	36	36	36	36	36	36	36	36	36	36
	90	35	35	35	35	35	35	35	35	35	35	35	35	35

Notes:

1. Tables are based on critical rail span for load combinations as specified in chapter 2 of the ASCE 7-16 and allowable design loads per the 2015 Aluminum Design Manual.
2. Panels are assumed to be in portrait orientation with a maximum length of 82"

Structural ENGINUITY INC
Ingenuity in Engineering

SUNMODO®

Max Rail Spans for SunModo SMR100 System

Table 79b	Mean Roof Height: 15 < h ≤ 30 ft Roof Angle: 20 < θ ≤ 27 degrees Exposure Category: B	Panel Orientation: Portrait North/South Support γ_E = 1.5 Roof Type : Gable

Roof Wind Zone	Ground Snow Load (psf)	Wind Speed (mph)												
		90	95	100	105	110	115	120	130	140	150	160	170	180
Zones 1 & 2e	0	94	94	94	94	92	89	85	76	68	62	57	53	49
	10	79	79	79	79	79	79	79	76	68	62	57	53	49
	20	66	66	66	66	66	66	66	66	66	62	57	53	49
	30	56	56	56	56	56	56	56	56	56	56	56	53	49
	40	50	50	50	50	50	50	50	50	50	50	50	50	49
	50	45	45	45	45	45	45	45	45	45	45	45	45	45
	60	42	42	42	42	42	42	42	42	42	42	42	42	42
	70	39	39	39	39	39	39	39	39	39	39	39	39	39
	80	36	36	36	36	36	36	36	36	36	36	36	36	36
	90	35	35	35	35	35	35	35	35	35	35	35	35	35
Zones 2n, 2r, & 3e	0	94	90	85	80	74	69	64	57	51	46	42	39	36
	10	79	79	79	79	74	69	64	57	51	46	42	39	36
	20	66	66	66	66	66	66	64	57	51	46	42	39	36
	30	56	56	56	56	56	56	56	56	51	46	42	39	36
	40	50	50	50	50	50	50	50	50	50	46	42	39	36
	50	45	45	45	45	45	45	45	45	45	45	42	39	36
	60	42	42	42	42	42	42	42	42	42	42	42	39	36
	70	39	39	39	39	39	39	39	39	39	39	39	39	36
	80	36	36	36	36	36	36	36	36	36	36	36	36	36
	90	35	35	35	35	35	35	35	35	35	35	35	35	35
Zone 3r	0	90	85	79	72	67	62	58	51	46	42	38	35	33
	10	79	79	79	72	67	62	58	51	46	42	38	35	33
	20	66	66	66	66	66	62	58	51	46	42	38	35	33
	30	56	56	56	56	56	56	56	51	46	42	38	35	33
	40	50	50	50	50	50	50	50	50	46	42	38	35	33
	50	45	45	45	45	45	45	45	45	45	42	38	35	33
	60	42	42	42	42	42	42	42	42	42	42	38	35	33
	70	39	39	39	39	39	39	39	39	39	39	38	35	33
	80	36	36	36	36	36	36	36	36	36	36	36	35	33
	90	35	35	35	35	35	35	35	35	35	35	35	35	33

Notes:

1. Tables are based on critical rail span for load combinations as specified in chapter 2 of the ASCE 7-16 and allowable design loads per the 2015 Aluminum Design Manual.
2. Panels are assumed to be in portrait orientation with a maximum length of 82"

Structural ENGINUITY INC
Ingenuity in Engineering

SUNMODO®

Max Rail Spans for SunModo SMR100 System

Table 80a

Mean Roof Height: 15 < h ≤ 30 ft
Roof Angle: 20 < θ ≤ 27 degrees
Exposure Category: C

Panel Orientation: Portrait
North/South Support γ_E = 1
Roof Type : Gable

Roof Wind Zone	Ground Snow Load (psf)	Wind Speed (mph)												
		90	95	100	105	110	115	120	130	140	150	160	170	180
Zones 1 & 2e	0	94	94	94	94	94	92	88	80	71	65	59	55	51
	10	79	79	79	79	79	79	79	78	71	65	59	55	51
	20	66	66	66	66	66	66	66	66	64	63	59	55	51
	30	56	56	56	56	56	56	56	56	56	56	55	54	51
	40	50	50	50	50	50	50	50	50	50	50	50	49	49
	50	45	45	45	45	45	45	45	45	45	45	45	45	45
	60	42	42	42	42	42	42	42	42	42	42	42	42	42
	70	39	39	39	39	39	39	39	39	39	39	39	39	39
	80	36	36	36	36	36	36	36	36	36	36	36	36	36
	90	35	35	35	35	35	35	35	35	35	35	35	35	35
Zones 2n, 2r, & 3e	0	94	93	88	84	78	73	68	60	54	49	44	41	38
	10	79	79	79	79	78	73	68	60	54	49	44	41	38
	20	66	66	66	66	66	66	66	60	54	49	44	41	38
	30	56	56	56	56	56	56	56	56	54	49	44	41	38
	40	50	50	50	50	50	50	50	50	50	49	44	41	38
	50	45	45	45	45	45	45	45	45	45	45	44	41	38
	60	42	42	42	42	42	42	42	42	42	42	42	41	38
	70	39	39	39	39	39	39	39	39	39	39	39	39	38
	80	36	36	36	36	36	36	36	36	36	36	36	36	36
	90	35	35	35	35	35	35	35	35	35	35	35	35	35
Zone 3r	0	93	88	84	77	71	66	61	54	48	44	40	37	34
	10	79	79	79	77	71	66	61	54	48	44	40	37	34
	20	66	66	66	66	66	66	61	54	48	44	40	37	34
	30	56	56	56	56	56	56	56	54	48	44	40	37	34
	40	50	50	50	50	50	50	50	50	48	44	40	37	34
	50	45	45	45	45	45	45	45	45	45	44	40	37	34
	60	42	42	42	42	42	42	42	42	42	42	40	37	34
	70	39	39	39	39	39	39	39	39	39	39	39	37	34
	80	36	36	36	36	36	36	36	36	36	36	36	36	34
	90	35	35	35	35	35	35	35	35	35	35	35	35	34

Notes:

1. Tables are based on critical rail span for load combinations as specified in chapter 2 of the ASCE 7-16 and allowable design loads per the 2015 Aluminum Design Manual.
2. Panels are assumed to be in portrait orientation with a maximum length of 82"

Structural ENGINUITY INC
Ingenuity in Engineering

SUNMODO®

Max Rail Spans for SunModo SMR100 System

Table 80b	Mean Roof Height: 15 < h ≤ 30 ft Roof Angle: 20 < θ ≤ 27 degrees Exposure Category: C	Panel Orientation: Portrait North/South Support γ_E = 1.5 Roof Type : Gable

Roof Wind Zone	Ground Snow Load (psf)	Wind Speed (mph)												
		90	95	100	105	110	115	120	130	140	150	160	170	180
Zones 1 & 2e	0	94	91	86	81	75	70	66	60	54	50	46	43	40
	10	79	79	79	79	75	70	66	60	54	50	46	43	40
	20	66	66	66	66	66	66	66	60	54	50	46	43	40
	30	56	56	56	56	56	56	56	56	54	50	46	43	40
	40	50	50	50	50	50	50	50	50	50	50	46	43	40
	50	45	45	45	45	45	45	45	45	45	45	45	43	40
	60	42	42	42	42	42	42	42	42	42	42	42	42	40
	70	39	39	39	39	39	39	39	39	39	39	39	39	39
	80	36	36	36	36	36	36	36	36	36	36	36	36	36
	90	35	35	35	35	35	35	35	35	35	35	35	35	35
Zones 2n, 2r, & 3e	0	78	71	66	61	57	53	50	45	40	37	34	32	30
	10	78	71	66	61	57	53	50	45	40	37	34	32	30
	20	66	66	66	61	57	53	50	45	40	37	34	32	30
	30	56	56	56	56	56	53	50	45	40	37	34	32	30
	40	50	50	50	50	50	50	50	45	40	37	34	32	30
	50	45	45	45	45	45	45	45	45	40	37	34	32	30
	60	42	42	42	42	42	42	42	42	40	37	34	32	30
	70	39	39	39	39	39	39	39	39	39	37	34	32	30
	80	36	36	36	36	36	36	36	36	36	36	34	32	30
	90	35	35	35	35	35	35	35	35	35	35	34	32	30
Zone 3r	0	70	64	59	55	51	48	45	40	36	33	31	28	27
	10	70	64	59	55	51	48	45	40	36	33	31	28	27
	20	66	64	59	55	51	48	45	40	36	33	31	28	27
	30	56	56	56	55	51	48	45	40	36	33	31	28	27
	40	50	50	50	50	50	48	45	40	36	33	31	28	27
	50	45	45	45	45	45	45	45	40	36	33	31	28	27
	60	42	42	42	42	42	42	42	40	36	33	31	28	27
	70	39	39	39	39	39	39	39	39	36	33	31	28	27
	80	36	36	36	36	36	36	36	36	36	33	31	28	27
	90	35	35	35	35	35	35	35	35	35	33	31	28	27

Notes:

1. Tables are based on critical rail span for load combinations as specified in chapter 2 of the ASCE 7-16 and allowable design loads per the 2015 Aluminum Design Manual.
2. Panels are assumed to be in portrait orientation with a maximum length of 82"

Structural ENGINUITY INC
Ingenuity in Engineering

SUNMODO®

Max Rail Spans for SunModo SMR100 System

Table 81a

Mean Roof Height: 15 < h ≤ 30 ft
Roof Angle: 20 < θ ≤ 27 degrees
Exposure Category: D

Panel Orientation: Portrait
North/South Support γ_E = 1
Roof Type : Gable

Roof Wind Zone	Ground Snow Load (psf)	Wind Speed (mph)												
		90	95	100	105	110	115	120	130	140	150	160	170	180
Zones 1 & 2e	0	94	94	94	92	88	85	79	70	63	58	53	49	46
	10	79	79	79	79	79	79	78	70	63	58	53	49	46
	20	66	66	66	66	66	66	65	64	63	58	53	49	46
	30	56	56	56	56	56	56	56	56	56	55	53	49	46
	40	50	50	50	50	50	50	50	50	50	50	49	48	46
	50	45	45	45	45	45	45	45	45	45	45	45	45	44
	60	42	42	42	42	42	42	42	42	42	42	42	42	42
	70	39	39	39	39	39	39	39	39	39	39	39	39	39
	80	36	36	36	36	36	36	36	36	36	36	36	36	36
	90	35	35	35	35	35	35	35	35	35	35	35	35	35
Zones 2n, 2r, & 3e	0	90	86	80	73	68	64	60	53	48	43	40	36	34
	10	79	79	79	73	68	64	60	53	48	43	40	36	34
	20	66	66	66	66	66	64	60	53	48	43	40	36	34
	30	56	56	56	56	56	56	56	53	48	43	40	36	34
	40	50	50	50	50	50	50	50	50	48	43	40	36	34
	50	45	45	45	45	45	45	45	45	45	43	40	36	34
	60	42	42	42	42	42	42	42	42	42	42	40	36	34
	70	39	39	39	39	39	39	39	39	39	39	39	36	34
	80	36	36	36	36	36	36	36	36	36	36	36	36	34
	90	35	35	35	35	35	35	35	35	35	35	35	35	34
Zone 3r	0	86	79	72	66	61	57	54	48	43	39	35	33	31
	10	79	79	72	66	61	57	54	48	43	39	35	33	31
	20	66	66	66	66	61	57	54	48	43	39	35	33	31
	30	56	56	56	56	56	56	54	48	43	39	35	33	31
	40	50	50	50	50	50	50	50	48	43	39	35	33	31
	50	45	45	45	45	45	45	45	45	43	39	35	33	31
	60	42	42	42	42	42	42	42	42	42	39	35	33	31
	70	39	39	39	39	39	39	39	39	39	39	35	33	31
	80	36	36	36	36	36	36	36	36	36	36	35	33	31
	90	35	35	35	35	35	35	35	35	35	35	35	33	31

Notes:

1. Tables are based on critical rail span for load combinations as specified in chapter 2 of the ASCE 7-16 and allowable design loads per the 2015 Aluminum Design Manual.
2. Panels are assumed to be in portrait orientation with a maximum length of 82"

Structural ENGINUITY INC
Ingenuity in Engineering

SUNMODO®

Max Rail Spans for SunModo SMR100 System

Table 81b

Mean Roof Height: 15 < h ≤ 30 ft
Roof Angle: 20 < θ ≤ 27 degrees
Exposure Category: D

Panel Orientation: Portrait
North/South Support γ_E = 1.5
Roof Type : Gable

Roof Wind Zone	Ground Snow Load (psf)	Wind Speed (mph)												
		90	95	100	105	110	115	120	130	140	150	160	170	180
Zones 1 & 2e	0	88	84	77	71	67	63	59	54	49	45	41	39	36
	10	79	79	77	71	67	63	59	54	49	45	41	39	36
	20	66	66	66	66	66	63	59	54	49	45	41	39	36
	30	56	56	56	56	56	56	56	54	49	45	41	39	36
	40	50	50	50	50	50	50	50	50	49	45	41	39	36
	50	45	45	45	45	45	45	45	45	45	45	41	39	36
	60	42	42	42	42	42	42	42	42	42	42	41	39	36
	70	39	39	39	39	39	39	39	39	39	39	39	39	36
	80	36	36	36	36	36	36	36	36	36	36	36	36	36
	90	35	35	35	35	35	35	35	35	35	35	35	35	35
Zones 2n, 2r, & 3e	0	68	62	58	54	50	47	44	40	36	33	31	29	27
	10	68	62	58	54	50	47	44	40	36	33	31	29	27
	20	66	62	58	54	50	47	44	40	36	33	31	29	27
	30	56	56	56	54	50	47	44	40	36	33	31	29	27
	40	50	50	50	50	50	47	44	40	36	33	31	29	27
	50	45	45	45	45	45	45	44	40	36	33	31	29	27
	60	42	42	42	42	42	42	42	40	36	33	31	29	27
	70	39	39	39	39	39	39	39	39	36	33	31	29	27
	80	36	36	36	36	36	36	36	36	36	33	31	29	27
	90	35	35	35	35	35	35	35	35	35	33	31	29	27
Zone 3r	0	61	56	52	48	45	42	40	36	32	30	28	26	24
	10	61	56	52	48	45	42	40	36	32	30	28	26	24
	20	61	56	52	48	45	42	40	36	32	30	28	26	24
	30	56	56	52	48	45	42	40	36	32	30	28	26	24
	40	50	50	50	48	45	42	40	36	32	30	28	26	24
	50	45	45	45	45	45	42	40	36	32	30	28	26	24
	60	42	42	42	42	42	42	40	36	32	30	28	26	24
	70	39	39	39	39	39	39	39	36	32	30	28	26	24
	80	36	36	36	36	36	36	36	36	32	30	28	26	24
	90	35	35	35	35	35	35	35	35	32	30	28	26	24

Notes:

1. Tables are based on critical rail span for load combinations as specified in chapter 2 of the ASCE 7-16 and allowable design loads per the 2015 Aluminum Design Manual.
2. Panels are assumed to be in portrait orientation with a maximum length of 82"

Structural ENGINUITY INC
Ingenuity in Engineering

SUNMODO®

Max Rail Spans for SunModo SMR100 System

Table 82a	Mean Roof Height: 15 < h ≤ 30 ft Roof Angle: 27 < θ ≤ 45 degrees Exposure Category: B	Panel Orientation: Portrait North/South Support γ_E = 1 Roof Type : Gable

Roof Wind Zone	Ground Snow Load (psf)	Wind Speed (mph)												
		90	95	100	105	110	115	120	130	140	150	160	170	180
Zones 1, 2e, & 2r	0	94	94	94	94	94	94	92	88	84	80	76	69	63
	10	78	78	78	78	78	78	78	76	74	72	70	68	63
	20	68	68	68	68	68	67	66	65	64	62	61	60	58
	30	58	58	58	58	58	58	58	58	57	56	55	54	53
	40	52	52	52	52	52	52	52	52	52	51	50	50	49
	50	47	47	47	47	47	47	47	47	47	47	47	46	45
	60	43	43	43	43	43	43	43	43	43	43	43	43	43
	70	41	41	41	41	41	41	41	41	41	41	41	41	40
	80	38	38	38	38	38	38	38	38	38	38	38	38	38
	90	36	36	36	36	36	36	36	36	36	36	36	36	36
Zones 2n & 3r	0	94	94	94	94	94	94	92	88	82	74	66	61	56
	10	78	78	78	78	78	78	78	76	74	72	66	61	56
	20	68	68	68	68	68	67	66	65	64	62	61	60	56
	30	58	58	58	58	58	58	58	58	57	56	55	54	53
	40	52	52	52	52	52	52	52	52	52	51	50	50	49
	50	47	47	47	47	47	47	47	47	47	47	47	46	45
	60	43	43	43	43	43	43	43	43	43	43	43	43	43
	70	41	41	41	41	41	41	41	41	41	41	41	41	40
	80	38	38	38	38	38	38	38	38	38	38	38	38	38
	90	36	36	36	36	36	36	36	36	36	36	36	36	36
Zone 3e	0	94	94	94	94	93	89	86	78	69	62	57	52	48
	10	78	78	78	78	78	78	78	76	69	62	57	52	48
	20	68	68	68	68	68	67	66	65	64	62	57	52	48
	30	58	58	58	58	58	58	58	58	57	56	55	52	48
	40	52	52	52	52	52	52	52	52	52	51	50	50	48
	50	47	47	47	47	47	47	47	47	47	47	47	46	45
	60	43	43	43	43	43	43	43	43	43	43	43	43	43
	70	41	41	41	41	41	41	41	41	41	41	41	41	40
	80	38	38	38	38	38	38	38	38	38	38	38	38	38
	90	36	36	36	36	36	36	36	36	36	36	36	36	36

Notes:

1. Tables are based on critical rail span for load combinations as specified in chapter 2 of the ASCE 7-16 and allowable design loads per the 2015 Aluminum Design Manual.
2. Panels are assumed to be in portrait orientation with a maximum length of 82"

Structural ENGINUITY INC
Ingenuity in Engineering

SUNMODO®

Max Rail Spans for SunModo SMR100 System

Table 82b	Mean Roof Height: 15 < h ≤ 30 ft Roof Angle: 27 < θ ≤ 45 degrees Exposure Category: B	Panel Orientation: Portrait North/South Support γ_E = 1.5 Roof Type : Gable

Roof Wind Zone	Ground Snow Load (psf)	Wind Speed (mph)												
		90	95	100	105	110	115	120	130	140	150	160	170	180
Zones 1, 2e, & 2r	0	94	94	94	94	93	89	85	77	68	60	55	50	46
	10	78	78	78	78	78	78	78	76	68	60	55	50	46
	20	68	68	68	68	68	67	66	65	64	60	55	50	46
	30	58	58	58	58	58	58	58	58	57	56	55	50	46
	40	52	52	52	52	52	52	52	52	52	51	50	50	46
	50	47	47	47	47	47	47	47	47	47	47	47	46	45
	60	43	43	43	43	43	43	43	43	43	43	43	43	43
	70	41	41	41	41	41	41	41	41	41	41	41	41	40
	80	38	38	38	38	38	38	38	38	38	38	38	38	38
	90	36	36	36	36	36	36	36	36	36	36	36	36	36
Zones 2n & 3r	0	94	94	92	88	85	81	76	67	60	54	49	45	42
	10	78	78	78	78	78	78	76	67	60	54	49	45	42
	20	68	68	68	68	68	67	66	65	60	54	49	45	42
	30	58	58	58	58	58	58	58	58	57	54	49	45	42
	40	52	52	52	52	52	52	52	52	52	51	49	45	42
	50	47	47	47	47	47	47	47	47	47	47	47	45	42
	60	43	43	43	43	43	43	43	43	43	43	43	43	42
	70	41	41	41	41	41	41	41	41	41	41	41	41	40
	80	38	38	38	38	38	38	38	38	38	38	38	38	38
	90	36	36	36	36	36	36	36	36	36	36	36	36	36
Zone 3e	0	92	88	84	80	74	69	64	57	51	46	42	39	36
	10	78	78	78	78	74	69	64	57	51	46	42	39	36
	20	68	68	68	68	68	67	64	57	51	46	42	39	36
	30	58	58	58	58	58	58	58	57	51	46	42	39	36
	40	52	52	52	52	52	52	52	52	51	46	42	39	36
	50	47	47	47	47	47	47	47	47	47	46	42	39	36
	60	43	43	43	43	43	43	43	43	43	43	42	39	36
	70	41	41	41	41	41	41	41	41	41	41	41	39	36
	80	38	38	38	38	38	38	38	38	38	38	38	38	36
	90	36	36	36	36	36	36	36	36	36	36	36	36	36

Notes:

1. Tables are based on critical rail span for load combinations as specified in chapter 2 of the ASCE 7-16 and allowable design loads per the 2015 Aluminum Design Manual.
2. Panels are assumed to be in portrait orientation with a maximum length of 82"

Structural ENGINUITY INC
Ingenuity in Engineering

SUNMODO®

Max Rail Spans for SunModo SMR100 System

Table 83a

Mean Roof Height: 15 < h ≤ 30 ft
Roof Angle: 27 < θ ≤ 45 degrees
Exposure Category: C

Panel Orientation: Portrait
North/South Support γ_E = 1
Roof Type : Gable

Roof Wind Zone	Ground Snow Load (psf)	Wind Speed (mph)												
		90	95	100	105	110	115	120	130	140	150	160	170	180
Zones 1, 2e, & 2r	0	94	94	93	90	88	86	83	79	72	64	58	52	48
	10	78	78	78	77	76	75	73	71	69	64	58	52	48
	20	68	67	67	66	65	64	63	62	60	59	57	52	48
	30	58	58	58	58	58	57	57	56	54	53	52	50	48
	40	52	52	52	52	52	52	52	51	50	49	48	47	46
	50	47	47	47	47	47	47	47	47	46	46	45	44	43
	60	43	43	43	43	43	43	43	43	43	43	42	41	41
	70	41	41	41	41	41	41	41	41	41	41	40	39	39
	80	38	38	38	38	38	38	38	38	38	38	38	38	37
	90	36	36	36	36	36	36	36	36	36	36	36	36	35
Zones 2n & 3r	0	94	94	93	90	87	84	81	71	63	57	52	48	44
	10	78	78	78	77	76	75	73	71	63	57	52	48	44
	20	68	67	67	66	65	64	63	62	60	57	52	48	44
	30	58	58	58	58	58	57	57	56	54	53	52	48	44
	40	52	52	52	52	52	52	52	51	50	49	48	47	44
	50	47	47	47	47	47	47	47	47	46	46	45	44	43
	60	43	43	43	43	43	43	43	43	43	43	42	41	41
	70	41	41	41	41	41	41	41	41	41	41	40	39	39
	80	38	38	38	38	38	38	38	38	38	38	38	38	37
	90	36	36	36	36	36	36	36	36	36	36	36	36	35
Zone 3e	0	94	91	87	83	78	73	68	60	54	49	44	41	38
	10	78	78	78	77	76	73	68	60	54	49	44	41	38
	20	68	67	67	66	65	64	63	60	54	49	44	41	38
	30	58	58	58	58	58	57	57	56	54	49	44	41	38
	40	52	52	52	52	52	52	52	51	50	49	44	41	38
	50	47	47	47	47	47	47	47	47	46	46	44	41	38
	60	43	43	43	43	43	43	43	43	43	43	42	41	38
	70	41	41	41	41	41	41	41	41	41	41	40	39	38
	80	38	38	38	38	38	38	38	38	38	38	38	38	37
	90	36	36	36	36	36	36	36	36	36	36	36	36	35

Notes:

1. Tables are based on critical rail span for load combinations as specified in chapter 2 of the ASCE 7-16 and allowable design loads per the 2015 Aluminum Design Manual.
2. Panels are assumed to be in portrait orientation with a maximum length of 82"

Structural ENGINUITY INC
Ingenuity in Engineering

SUNMODO®

Max Rail Spans for SunModo SMR100 System

Table 83b	Mean Roof Height: 15 < h ≤ 30 ft Roof Angle: 27 < θ ≤ 45 degrees Exposure Category: C	Panel Orientation: Portrait North/South Support γ_E = 1.5 Roof Type : Gable

Roof Wind Zone	Ground Snow Load (psf)	Wind Speed (mph)												
		90	95	100	105	110	115	120	130	140	150	160	170	180
Zones 1, 2e, & 2r	0	94	91	86	83	77	71	66	58	52	47	43	39	36
	10	78	78	78	77	76	71	66	58	52	47	43	39	36
	20	68	67	67	66	65	64	63	58	52	47	43	39	36
	30	58	58	58	58	58	57	57	56	52	47	43	39	36
	40	52	52	52	52	52	52	52	51	50	47	43	39	36
	50	47	47	47	47	47	47	47	47	46	46	43	39	36
	60	43	43	43	43	43	43	43	43	43	43	42	39	36
	70	41	41	41	41	41	41	41	41	41	41	40	39	36
	80	38	38	38	38	38	38	38	38	38	38	38	38	36
	90	36	36	36	36	36	36	36	36	36	36	36	36	35
Zones 2n & 3r	0	87	83	78	72	67	62	59	52	47	43	39	36	34
	10	78	78	78	72	67	62	59	52	47	43	39	36	34
	20	68	67	67	66	65	62	59	52	47	43	39	36	34
	30	58	58	58	58	58	57	57	52	47	43	39	36	34
	40	52	52	52	52	52	52	52	51	47	43	39	36	34
	50	47	47	47	47	47	47	47	47	46	43	39	36	34
	60	43	43	43	43	43	43	43	43	43	43	39	36	34
	70	41	41	41	41	41	41	41	41	41	41	39	36	34
	80	38	38	38	38	38	38	38	38	38	38	38	36	34
	90	36	36	36	36	36	36	36	36	36	36	36	36	34
Zone 3e	0	78	71	66	61	57	53	50	45	40	37	34	32	30
	10	78	71	66	61	57	53	50	45	40	37	34	32	30
	20	68	67	66	61	57	53	50	45	40	37	34	32	30
	30	58	58	58	58	57	53	50	45	40	37	34	32	30
	40	52	52	52	52	52	52	50	45	40	37	34	32	30
	50	47	47	47	47	47	47	47	45	40	37	34	32	30
	60	43	43	43	43	43	43	43	43	40	37	34	32	30
	70	41	41	41	41	41	41	41	41	40	37	34	32	30
	80	38	38	38	38	38	38	38	38	38	37	34	32	30
	90	36	36	36	36	36	36	36	36	36	36	34	32	30

Notes:

1. Tables are based on critical rail span for load combinations as specified in chapter 2 of the ASCE 7-16 and allowable design loads per the 2015 Aluminum Design Manual.
2. Panels are assumed to be in portrait orientation with a maximum length of 82"

Structural ENGINUITY INC
Ingenuity in Engineering

SUNMODO®

Max Rail Spans for SunModo SMR100 System

Table 84a	Mean Roof Height: 15 < h ≤ 30 ft Roof Angle: 27 < θ ≤ 45 degrees Exposure Category: D	Panel Orientation: Portrait North/South Support γ_E = 1 Roof Type : Gable

Roof Wind Zone	Ground Snow Load (psf)	Wind Speed (mph)												
		90	95	100	105	110	115	120	130	140	150	160	170	180
Zones 1, 2e, & 2r	0	94	91	89	86	84	81	79	71	62	56	51	46	43
	10	78	77	76	75	74	72	71	68	62	56	51	46	43
	20	67	66	65	64	64	63	62	60	58	56	51	46	43
	30	58	58	58	57	57	56	55	54	53	51	50	46	43
	40	52	52	52	52	52	51	51	50	49	47	46	45	43
	50	47	47	47	47	47	47	47	46	45	44	43	42	42
	60	43	43	43	43	43	43	43	43	43	42	41	40	39
	70	41	41	41	41	41	41	41	41	40	40	39	38	38
	80	38	38	38	38	38	38	38	38	38	38	37	37	36
	90	36	36	36	36	36	36	36	36	36	36	36	35	35
Zones 2n & 3r	0	94	91	88	85	81	75	70	62	56	50	46	42	39
	10	78	77	76	75	74	72	70	62	56	50	46	42	39
	20	67	66	65	64	64	63	62	60	56	50	46	42	39
	30	58	58	58	57	57	56	55	54	53	50	46	42	39
	40	52	52	52	52	52	51	51	50	49	47	46	42	39
	50	47	47	47	47	47	47	47	46	45	44	43	42	39
	60	43	43	43	43	43	43	43	43	43	42	41	40	39
	70	41	41	41	41	41	41	41	41	40	40	39	38	38
	80	38	38	38	38	38	38	38	38	38	38	37	37	36
	90	36	36	36	36	36	36	36	36	36	36	36	35	35
Zone 3e	0	88	84	80	73	68	64	60	53	48	43	40	37	34
	10	78	77	76	73	68	64	60	53	48	43	40	37	34
	20	67	66	65	64	64	63	60	53	48	43	40	37	34
	30	58	58	58	57	57	56	55	53	48	43	40	37	34
	40	52	52	52	52	52	51	51	50	48	43	40	37	34
	50	47	47	47	47	47	47	47	46	45	43	40	37	34
	60	43	43	43	43	43	43	43	43	43	42	40	37	34
	70	41	41	41	41	41	41	41	41	40	40	39	37	34
	80	38	38	38	38	38	38	38	38	38	38	37	37	34
	90	36	36	36	36	36	36	36	36	36	36	36	35	34

Notes:

1. Tables are based on critical rail span for load combinations as specified in chapter 2 of the ASCE 7-16 and allowable design loads per the 2015 Aluminum Design Manual.
2. Panels are assumed to be in portrait orientation with a maximum length of 82"

Structural ENGINUITY INC
Ingenuity in Engineering

SUNMODO®

Max Rail Spans for SunModo SMR100 System

Table 84b

Mean Roof Height: 15 < h ≤ 30 ft
Roof Angle: 27 < θ ≤ 45 degrees
Exposure Category: D

Panel Orientation: Portrait
North/South Support γ_E = 1.5
Roof Type : Gable

Roof Wind Zone	Ground Snow Load (psf)	Wind Speed (mph)												
		90	95	100	105	110	115	120	130	140	150	160	170	180
Zones 1, 2e, & 2r	0	88	84	79	72	66	62	58	51	46	41	38	35	33
	10	78	77	76	72	66	62	58	51	46	41	38	35	33
	20	67	66	65	64	64	62	58	51	46	41	38	35	33
	30	58	58	58	57	57	56	55	51	46	41	38	35	33
	40	52	52	52	52	52	51	51	50	46	41	38	35	33
	50	47	47	47	47	47	47	47	46	45	41	38	35	33
	60	43	43	43	43	43	43	43	43	43	41	38	35	33
	70	41	41	41	41	41	41	41	41	40	40	38	35	33
	80	38	38	38	38	38	38	38	38	38	38	37	35	33
	90	36	36	36	36	36	36	36	36	36	36	36	35	33
Zones 2n & 3r	0	81	74	68	63	59	55	52	46	42	38	35	33	31
	10	78	74	68	63	59	55	52	46	42	38	35	33	31
	20	67	66	65	63	59	55	52	46	42	38	35	33	31
	30	58	58	58	57	57	55	52	46	42	38	35	33	31
	40	52	52	52	52	52	51	51	46	42	38	35	33	31
	50	47	47	47	47	47	47	47	46	42	38	35	33	31
	60	43	43	43	43	43	43	43	43	42	38	35	33	31
	70	41	41	41	41	41	41	41	41	40	38	35	33	31
	80	38	38	38	38	38	38	38	38	38	38	35	33	31
	90	36	36	36	36	36	36	36	36	36	36	35	33	31
Zone 3e	0	68	62	58	54	50	47	45	40	36	33	31	29	27
	10	68	62	58	54	50	47	45	40	36	33	31	29	27
	20	67	62	58	54	50	47	45	40	36	33	31	29	27
	30	58	58	58	54	50	47	45	40	36	33	31	29	27
	40	52	52	52	52	50	47	45	40	36	33	31	29	27
	50	47	47	47	47	47	47	45	40	36	33	31	29	27
	60	43	43	43	43	43	43	43	40	36	33	31	29	27
	70	41	41	41	41	41	41	41	40	36	33	31	29	27
	80	38	38	38	38	38	38	38	38	36	33	31	29	27
	90	36	36	36	36	36	36	36	36	36	33	31	29	27

Notes:

1. Tables are based on critical rail span for load combinations as specified in chapter 2 of the ASCE 7-16 and allowable design loads per the 2015 Aluminum Design Manual.
2. Panels are assumed to be in portrait orientation with a maximum length of 82"

Structural ENGINUITY INC
Ingenuity in Engineering

SUNMODO®

Max Rail Spans for SunModo SMR100 System

Table 85a

Mean Roof Height: 15 < h ≤ 30 ft
Roof Angle: 7 < θ ≤ 20 degrees
Exposure Category: B

Panel Orientation: Portrait
North/South Support γ_E = 1
Roof Type : Hip h/B = ≥ 0.8

Roof Wind Zone	Ground Snow Load (psf)	Wind Speed (mph)												
		90	95	100	105	110	115	120	130	140	150	160	170	180
Zone 1	0	94	94	94	94	94	94	94	89	79	71	65	60	56
	10	73	73	73	73	73	73	73	73	71	70	65	60	56
	20	56	56	56	56	56	56	56	56	56	56	56	55	54
	30	56	56	56	56	56	56	56	56	56	56	56	55	54
	40	50	50	50	50	50	50	50	50	50	50	50	50	49
	50	45	45	45	45	45	45	45	45	45	45	45	45	45
	60	42	42	42	42	42	42	42	42	42	42	42	42	42
	70	39	39	39	39	39	39	39	39	39	39	39	39	39
	80	36	36	36	36	36	36	36	36	36	36	36	36	36
	90	34	34	34	34	34	34	34	34	34	34	34	34	34
Zone 2r	0	94	94	94	94	94	91	87	77	69	62	57	52	48
	10	73	73	73	73	73	73	73	73	69	62	57	52	48
	20	56	56	56	56	56	56	56	56	56	56	56	52	48
	30	56	56	56	56	56	56	56	56	56	56	56	52	48
	40	50	50	50	50	50	50	50	50	50	50	50	50	48
	50	45	45	45	45	45	45	45	45	45	45	45	45	45
	60	42	42	42	42	42	42	42	42	42	42	42	42	42
	70	39	39	39	39	39	39	39	39	39	39	39	39	39
	80	36	36	36	36	36	36	36	36	36	36	36	36	36
	90	34	34	34	34	34	34	34	34	34	34	34	34	34
Zones 2e & 3	0	94	94	94	94	91	88	82	72	65	59	54	49	46
	10	73	73	73	73	73	73	73	72	65	59	54	49	46
	20	56	56	56	56	56	56	56	56	56	56	54	49	46
	30	56	56	56	56	56	56	56	56	56	56	54	49	46
	40	50	50	50	50	50	50	50	50	50	50	50	49	46
	50	45	45	45	45	45	45	45	45	45	45	45	45	45
	60	42	42	42	42	42	42	42	42	42	42	42	42	42
	70	39	39	39	39	39	39	39	39	39	39	39	39	39
	80	36	36	36	36	36	36	36	36	36	36	36	36	36
	90	34	34	34	34	34	34	34	34	34	34	34	34	34

Notes:

1. Tables are based on critical rail span for load combinations as specified in chapter 2 of the ASCE 7-16 and allowable design loads per the 2015 Aluminum Design Manual.
2. Panels are assumed to be in portrait orientation with a maximum length of 82"

Structural ENGINUITY INC
Ingenuity in Engineering

SUNMODO®

Max Rail Spans for SunModo SMR100 System

Table 85b

Mean Roof Height: 15 < h ≤ 30 ft
Roof Angle: 7 < θ ≤ 20 degrees
Exposure Category: B

Panel Orientation: Portrait
North/South Support γ_E = 1.5
Roof Type : Hip h/B = ≥ 0.8

Roof Wind Zone	Ground Snow Load (psf)	Wind Speed (mph)												
		90	95	100	105	110	115	120	130	140	150	160	170	180
Zone 1	0	94	94	94	90	85	78	73	65	59	54	50	47	43
	10	73	73	73	73	73	73	73	65	59	54	50	47	43
	20	56	56	56	56	56	56	56	56	56	54	50	47	43
	30	56	56	56	56	56	56	56	56	56	54	50	47	43
	40	50	50	50	50	50	50	50	50	50	50	50	47	43
	50	45	45	45	45	45	45	45	45	45	45	45	45	43
	60	42	42	42	42	42	42	42	42	42	42	42	42	42
	70	39	39	39	39	39	39	39	39	39	39	39	39	39
	80	36	36	36	36	36	36	36	36	36	36	36	36	36
	90	34	34	34	34	34	34	34	34	34	34	34	34	34
Zone 2r	0	94	90	84	78	73	68	64	57	51	47	43	40	37
	10	73	73	73	73	73	68	64	57	51	47	43	40	37
	20	56	56	56	56	56	56	56	56	51	47	43	40	37
	30	56	56	56	56	56	56	56	56	51	47	43	40	37
	40	50	50	50	50	50	50	50	50	50	47	43	40	37
	50	45	45	45	45	45	45	45	45	45	45	43	40	37
	60	42	42	42	42	42	42	42	42	42	42	42	40	37
	70	39	39	39	39	39	39	39	39	39	39	39	39	37
	80	36	36	36	36	36	36	36	36	36	36	36	36	36
	90	34	34	34	34	34	34	34	34	34	34	34	34	34
Zones 2e & 3	0	91	86	79	73	68	64	60	54	49	44	41	38	35
	10	73	73	73	73	68	64	60	54	49	44	41	38	35
	20	56	56	56	56	56	56	56	54	49	44	41	38	35
	30	56	56	56	56	56	56	56	54	49	44	41	38	35
	40	50	50	50	50	50	50	50	50	49	44	41	38	35
	50	45	45	45	45	45	45	45	45	45	44	41	38	35
	60	42	42	42	42	42	42	42	42	42	42	41	38	35
	70	39	39	39	39	39	39	39	39	39	39	39	38	35
	80	36	36	36	36	36	36	36	36	36	36	36	36	35
	90	34	34	34	34	34	34	34	34	34	34	34	34	34

Notes:

1. Tables are based on critical rail span for load combinations as specified in chapter 2 of the ASCE 7-16 and allowable design loads per the 2015 Aluminum Design Manual.
2. Panels are assumed to be in portrait orientation with a maximum length of 82"

Structural ENGINUITY INC
Ingenuity in Engineering

SUNMODO®

Max Rail Spans for SunModo SMR100 System

Table 86a

Mean Roof Height: 15 < h ≤ 30 ft
Roof Angle: 7 < θ ≤ 20 degrees
Exposure Category: C

Panel Orientation: Portrait
North/South Support γ_E = 1
Roof Type : Hip h/B = ≥ 0.8

Roof Wind Zone	Ground Snow Load (psf)	Wind Speed (mph)												
		90	95	100	105	110	115	120	130	140	150	160	170	180
Zone 1	0	94	94	94	93	89	83	77	68	62	57	52	49	45
	10	73	73	73	73	73	72	71	68	62	57	52	49	45
	20	56	56	56	56	56	56	56	56	56	55	52	49	45
	30	56	56	56	56	56	56	56	56	56	55	52	49	45
	40	50	50	50	50	50	50	50	50	50	50	49	48	45
	50	45	45	45	45	45	45	45	45	45	45	45	44	44
	60	42	42	42	42	42	42	42	42	42	42	42	42	41
	70	39	39	39	39	39	39	39	39	39	39	39	39	39
	80	36	36	36	36	36	36	36	36	36	36	36	36	36
	90	34	34	34	34	34	34	34	34	34	34	34	34	34
Zone 2r	0	94	93	88	82	77	72	67	60	54	49	45	42	38
	10	73	73	73	73	73	72	67	60	54	49	45	42	38
	20	56	56	56	56	56	56	56	56	54	49	45	42	38
	30	56	56	56	56	56	56	56	56	54	49	45	42	38
	40	50	50	50	50	50	50	50	50	50	49	45	42	38
	50	45	45	45	45	45	45	45	45	45	45	45	42	38
	60	42	42	42	42	42	42	42	42	42	42	42	42	38
	70	39	39	39	39	39	39	39	39	39	39	39	39	38
	80	36	36	36	36	36	36	36	36	36	36	36	36	36
	90	34	34	34	34	34	34	34	34	34	34	34	34	34
Zones 2e & 3	0	94	89	84	77	72	67	63	57	51	46	43	39	37
	10	73	73	73	73	72	67	63	57	51	46	43	39	37
	20	56	56	56	56	56	56	56	56	51	46	43	39	37
	30	56	56	56	56	56	56	56	56	51	46	43	39	37
	40	50	50	50	50	50	50	50	50	50	46	43	39	37
	50	45	45	45	45	45	45	45	45	45	45	43	39	37
	60	42	42	42	42	42	42	42	42	42	42	42	39	37
	70	39	39	39	39	39	39	39	39	39	39	39	39	37
	80	36	36	36	36	36	36	36	36	36	36	36	36	36
	90	34	34	34	34	34	34	34	34	34	34	34	34	34

Notes:

1. Tables are based on critical rail span for load combinations as specified in chapter 2 of the ASCE 7-16 and allowable design loads per the 2015 Aluminum Design Manual.
2. Panels are assumed to be in portrait orientation with a maximum length of 82"

Structural ENGINUITY INC
Ingenuity in Engineering

SUNMODO®

Max Rail Spans for SunModo SMR100 System

Table 86b

Mean Roof Height: 15 < h ≤ 30 ft
Roof Angle: 7 < θ ≤ 20 degrees
Exposure Category: C

Panel Orientation: Portrait
North/South Support γ_E = 1.5
Roof Type : Hip h/B = ≥ 0.8

Roof Wind Zone	Ground Snow Load (psf)	Wind Speed (mph)												
		90	95	100	105	110	115	120	130	140	150	160	170	180
Zone 1	0	89	82	75	69	65	61	58	53	48	44	41	38	36
	10	73	73	73	69	65	61	58	53	48	44	41	38	36
	20	56	56	56	56	56	56	56	53	48	44	41	38	36
	30	56	56	56	56	56	56	56	53	48	44	41	38	36
	40	50	50	50	50	50	50	50	50	48	44	41	38	36
	50	45	45	45	45	45	45	45	45	45	44	41	38	36
	60	42	42	42	42	42	42	42	42	42	42	41	38	36
	70	39	39	39	39	39	39	39	39	39	39	39	38	36
	80	36	36	36	36	36	36	36	36	36	36	36	36	36
	90	34	34	34	34	34	34	34	34	34	34	34	34	34
Zone 2r	0	76	70	65	61	57	53	50	45	41	37	35	32	31
	10	73	70	65	61	57	53	50	45	41	37	35	32	31
	20	56	56	56	56	56	53	50	45	41	37	35	32	31
	30	56	56	56	56	56	53	50	45	41	37	35	32	31
	40	50	50	50	50	50	50	50	45	41	37	35	32	31
	50	45	45	45	45	45	45	45	45	41	37	35	32	31
	60	42	42	42	42	42	42	42	42	41	37	35	32	31
	70	39	39	39	39	39	39	39	39	39	37	35	32	31
	80	36	36	36	36	36	36	36	36	36	36	35	32	31
	90	34	34	34	34	34	34	34	34	34	34	34	32	31
Zones 2e & 3	0	72	66	62	57	54	51	48	43	39	36	33	31	29
	10	72	66	62	57	54	51	48	43	39	36	33	31	29
	20	56	56	56	56	54	51	48	43	39	36	33	31	29
	30	56	56	56	56	54	51	48	43	39	36	33	31	29
	40	50	50	50	50	50	50	48	43	39	36	33	31	29
	50	45	45	45	45	45	45	45	43	39	36	33	31	29
	60	42	42	42	42	42	42	42	42	39	36	33	31	29
	70	39	39	39	39	39	39	39	39	39	36	33	31	29
	80	36	36	36	36	36	36	36	36	36	36	33	31	29
	90	34	34	34	34	34	34	34	34	34	34	33	31	29

Notes:

1. Tables are based on critical rail span for load combinations as specified in chapter 2 of the ASCE 7-16 and allowable design loads per the 2015 Aluminum Design Manual.
2. Panels are assumed to be in portrait orientation with a maximum length of 82"

Structural ENGINUITY INC
Ingenuity in Engineering

SUNMODO®

Max Rail Spans for SunModo SMR100 System

Table 87a

Mean Roof Height: 15 < h ≤ 30 ft
Roof Angle: 7 < θ ≤ 20 degrees
Exposure Category: D

Panel Orientation: Portrait
North/South Support γ_E = 1
Roof Type : Hip h/B = ≥ 0.8

Roof Wind Zone	Ground Snow Load (psf)	Wind Speed (mph)												
		90	95	100	105	110	115	120	130	140	150	160	170	180
Zone 1	0	94	94	90	84	78	72	68	61	56	51	47	44	41
	10	73	73	73	72	71	70	68	61	56	51	47	44	41
	20	56	56	56	56	56	56	56	55	54	51	47	44	41
	30	56	56	56	56	56	56	56	55	54	51	47	44	41
	40	50	50	50	50	50	50	50	50	49	49	47	44	41
	50	45	45	45	45	45	45	45	45	45	45	44	43	41
	60	42	42	42	42	42	42	42	42	42	42	41	41	40
	70	39	39	39	39	39	39	39	39	39	39	39	39	38
	80	36	36	36	36	36	36	36	36	36	36	36	36	36
	90	34	34	34	34	34	34	34	34	34	34	34	34	34
Zone 2r	0	90	84	78	72	67	63	59	53	48	44	40	37	35
	10	73	73	73	72	67	63	59	53	48	44	40	37	35
	20	56	56	56	56	56	56	56	53	48	44	40	37	35
	30	56	56	56	56	56	56	56	53	48	44	40	37	35
	40	50	50	50	50	50	50	50	50	48	44	40	37	35
	50	45	45	45	45	45	45	45	45	45	44	40	37	35
	60	42	42	42	42	42	42	42	42	42	42	40	37	35
	70	39	39	39	39	39	39	39	39	39	39	39	37	35
	80	36	36	36	36	36	36	36	36	36	36	36	36	35
	90	34	34	34	34	34	34	34	34	34	34	34	34	34
Zones 2e & 3	0	86	79	73	68	64	60	56	50	46	42	38	35	33
	10	73	73	73	68	64	60	56	50	46	42	38	35	33
	20	56	56	56	56	56	56	56	50	46	42	38	35	33
	30	56	56	56	56	56	56	56	50	46	42	38	35	33
	40	50	50	50	50	50	50	50	50	46	42	38	35	33
	50	45	45	45	45	45	45	45	45	45	42	38	35	33
	60	42	42	42	42	42	42	42	42	42	42	38	35	33
	70	39	39	39	39	39	39	39	39	39	39	38	35	33
	80	36	36	36	36	36	36	36	36	36	36	36	35	33
	90	34	34	34	34	34	34	34	34	34	34	34	34	33

Notes:

1. Tables are based on critical rail span for load combinations as specified in chapter 2 of the ASCE 7-16 and allowable design loads per the 2015 Aluminum Design Manual.
2. Panels are assumed to be in portrait orientation with a maximum length of 82"

Structural ENGINUITY INC
Ingenuity in Engineering

SUNMODO®

Max Rail Spans for SunModo SMR100 System

Table 87b

Mean Roof Height: 15 < h ≤ 30 ft
Roof Angle: 7 < θ ≤ 20 degrees
Exposure Category: D

Panel Orientation: Portrait
North/South Support γ_E = 1.5
Roof Type : Hip h/B = ≥ 0.8

Roof Wind Zone	Ground Snow Load (psf)	Wind Speed (mph)												
		90	95	100	105	110	115	120	130	140	150	160	170	180
Zone 1	0	77	71	66	62	58	55	52	47	43	40	37	34	32
	10	73	71	66	62	58	55	52	47	43	40	37	34	32
	20	56	56	56	56	56	55	52	47	43	40	37	34	32
	30	56	56	56	56	56	55	52	47	43	40	37	34	32
	40	50	50	50	50	50	50	50	47	43	40	37	34	32
	50	45	45	45	45	45	45	45	45	43	40	37	34	32
	60	42	42	42	42	42	42	42	42	42	40	37	34	32
	70	39	39	39	39	39	39	39	39	39	39	37	34	32
	80	36	36	36	36	36	36	36	36	36	36	36	34	32
	90	34	34	34	34	34	34	34	34	34	34	34	34	32
Zone 2r	0	67	62	58	54	51	48	45	40	37	34	32	30	28
	10	67	62	58	54	51	48	45	40	37	34	32	30	28
	20	56	56	56	54	51	48	45	40	37	34	32	30	28
	30	56	56	56	54	51	48	45	40	37	34	32	30	28
	40	50	50	50	50	50	48	45	40	37	34	32	30	28
	50	45	45	45	45	45	45	45	40	37	34	32	30	28
	60	42	42	42	42	42	42	42	40	37	34	32	30	28
	70	39	39	39	39	39	39	39	39	37	34	32	30	28
	80	36	36	36	36	36	36	36	36	36	34	32	30	28
	90	34	34	34	34	34	34	34	34	34	34	32	30	28
Zones 2e & 3	0	63	59	55	51	48	45	43	38	35	32	30	28	27
	10	63	59	55	51	48	45	43	38	35	32	30	28	27
	20	56	56	55	51	48	45	43	38	35	32	30	28	27
	30	56	56	55	51	48	45	43	38	35	32	30	28	27
	40	50	50	50	50	48	45	43	38	35	32	30	28	27
	50	45	45	45	45	45	45	43	38	35	32	30	28	27
	60	42	42	42	42	42	42	42	38	35	32	30	28	27
	70	39	39	39	39	39	39	39	38	35	32	30	28	27
	80	36	36	36	36	36	36	36	36	35	32	30	28	27
	90	34	34	34	34	34	34	34	34	34	32	30	28	27

Notes:

1. Tables are based on critical rail span for load combinations as specified in chapter 2 of the ASCE 7-16 and allowable design loads per the 2015 Aluminum Design Manual.
2. Panels are assumed to be in portrait orientation with a maximum length of 82"

Structural ENGINUITY INC
Ingenuity in Engineering

SUNMODO®

Max Rail Spans for SunModo SMR100 System

Table 88a

Mean Roof Height: 15 < h ≤ 30 ft
Roof Angle: 7 < θ ≤ 20 degrees
Exposure Category: B

Panel Orientation: Portrait
North/South Support γ_E = 1
Roof Type : Hip h/B = ≤ 0.5

Roof Wind Zone	Ground Snow Load (psf)	Wind Speed (mph)												
		90	95	100	105	110	115	120	130	140	150	160	170	180
Zone 1	0	94	94	94	94	94	94	94	94	94	89	82	75	69
	10	73	73	73	73	73	73	73	73	69	68	66	65	64
	20	56	56	56	56	56	56	56	56	56	56	55	54	53
	30	56	56	56	56	56	56	56	56	56	56	55	54	53
	40	50	50	50	50	50	50	50	50	50	50	50	50	49
	50	45	45	45	45	45	45	45	45	45	45	45	45	45
	60	42	42	42	42	42	42	42	42	42	42	42	42	42
	70	39	39	39	39	39	39	39	39	39	39	39	39	39
	80	36	36	36	36	36	36	36	36	36	36	36	36	36
	90	34	34	34	34	34	34	34	34	34	34	34	34	34
Zone 2r	0	94	94	94	94	94	91	87	77	69	62	57	52	48
	10	73	73	73	73	73	73	73	73	69	62	57	52	48
	20	56	56	56	56	56	56	56	56	56	56	55	52	48
	30	56	56	56	56	56	56	56	56	56	56	55	52	48
	40	50	50	50	50	50	50	50	50	50	50	50	50	48
	50	45	45	45	45	45	45	45	45	45	45	45	45	45
	60	42	42	42	42	42	42	42	42	42	42	42	42	42
	70	39	39	39	39	39	39	39	39	39	39	39	39	39
	80	36	36	36	36	36	36	36	36	36	36	36	36	36
	90	34	34	34	34	34	34	34	34	34	34	34	34	34
Zones 2e & 3	0	94	94	94	94	94	94	94	92	84	76	69	63	58
	10	73	73	73	73	73	73	73	73	69	68	66	63	58
	20	56	56	56	56	56	56	56	56	56	56	55	54	53
	30	56	56	56	56	56	56	56	56	56	56	55	54	53
	40	50	50	50	50	50	50	50	50	50	50	50	50	49
	50	45	45	45	45	45	45	45	45	45	45	45	45	45
	60	42	42	42	42	42	42	42	42	42	42	42	42	42
	70	39	39	39	39	39	39	39	39	39	39	39	39	39
	80	36	36	36	36	36	36	36	36	36	36	36	36	36
	90	34	34	34	34	34	34	34	34	34	34	34	34	34

Notes:

1. Tables are based on critical rail span for load combinations as specified in chapter 2 of the ASCE 7-16 and allowable design loads per the 2015 Aluminum Design Manual.
2. Panels are assumed to be in portrait orientation with a maximum length of 82"

Structural ENGINUITY INC
Ingenuity in Engineering

SUNMODO®

Max Rail Spans for SunModo SMR100 System

Table 88b

Mean Roof Height: 15 < h ≤ 30 ft
Roof Angle: 7 < θ ≤ 20 degrees
Exposure Category: B

Panel Orientation: Portrait
North/South Support γ_E = 1.5
Roof Type : Hip h/B = ≤ 0.5

Roof Wind Zone	Ground Snow Load (psf)	Wind Speed (mph)												
		90	95	100	105	110	115	120	130	140	150	160	170	180
Zone 1	0	94	94	94	94	94	94	91	82	74	67	61	57	53
	10	73	73	73	73	73	73	73	73	69	67	61	57	53
	20	56	56	56	56	56	56	56	56	56	56	55	54	53
	30	56	56	56	56	56	56	56	56	56	56	55	54	53
	40	50	50	50	50	50	50	50	50	50	50	50	50	49
	50	45	45	45	45	45	45	45	45	45	45	45	45	45
	60	42	42	42	42	42	42	42	42	42	42	42	42	42
	70	39	39	39	39	39	39	39	39	39	39	39	39	39
	80	36	36	36	36	36	36	36	36	36	36	36	36	36
	90	34	34	34	34	34	34	34	34	34	34	34	34	34
Zone 2r	0	94	90	84	78	73	68	64	57	51	47	43	40	37
	10	73	73	73	73	73	68	64	57	51	47	43	40	37
	20	56	56	56	56	56	56	56	56	51	47	43	40	37
	30	56	56	56	56	56	56	56	56	51	47	43	40	37
	40	50	50	50	50	50	50	50	50	50	47	43	40	37
	50	45	45	45	45	45	45	45	45	45	45	43	40	37
	60	42	42	42	42	42	42	42	42	42	42	42	40	37
	70	39	39	39	39	39	39	39	39	39	39	39	39	37
	80	36	36	36	36	36	36	36	36	36	36	36	36	36
	90	34	34	34	34	34	34	34	34	34	34	34	34	34
Zones 2e & 3	0	94	94	94	93	89	83	78	69	62	57	52	48	44
	10	73	73	73	73	73	73	73	69	62	57	52	48	44
	20	56	56	56	56	56	56	56	56	56	56	52	48	44
	30	56	56	56	56	56	56	56	56	56	56	52	48	44
	40	50	50	50	50	50	50	50	50	50	50	50	48	44
	50	45	45	45	45	45	45	45	45	45	45	45	45	44
	60	42	42	42	42	42	42	42	42	42	42	42	42	42
	70	39	39	39	39	39	39	39	39	39	39	39	39	39
	80	36	36	36	36	36	36	36	36	36	36	36	36	36
	90	34	34	34	34	34	34	34	34	34	34	34	34	34

Notes:

1. Tables are based on critical rail span for load combinations as specified in chapter 2 of the ASCE 7-16 and allowable design loads per the 2015 Aluminum Design Manual.
2. Panels are assumed to be in portrait orientation with a maximum length of 82"

Structural ENGINUITY INC
Ingenuity in Engineering

SUNMODO®

Max Rail Spans for SunModo SMR100 System

Table 89a

Mean Roof Height: 15 < h ≤ 30 ft
Roof Angle: 7 < θ ≤ 20 degrees
Exposure Category: C

Panel Orientation: Portrait
North/South Support γ_E = 1
Roof Type : Hip h/B = ≤ 0.5

Roof Wind Zone	Ground Snow Load (psf)	Wind Speed (mph)												
		90	95	100	105	110	115	120	130	140	150	160	170	180
Zone 1	0	94	94	94	94	94	94	94	87	78	70	64	59	55
	10	73	73	73	73	73	72	69	67	66	64	62	59	55
	20	56	56	56	56	56	56	56	56	55	54	53	51	50
	30	56	56	56	56	56	56	56	56	55	54	53	51	50
	40	50	50	50	50	50	50	50	50	50	49	48	47	46
	50	45	45	45	45	45	45	45	45	45	45	45	44	43
	60	42	42	42	42	42	42	42	42	42	42	42	41	41
	70	39	39	39	39	39	39	39	39	39	39	39	39	39
	80	36	36	36	36	36	36	36	36	36	36	36	36	36
	90	34	34	34	34	34	34	34	34	34	34	34	34	34
Zone 2r	0	94	93	88	82	77	72	67	60	54	49	45	42	38
	10	73	73	73	73	73	72	67	60	54	49	45	42	38
	20	56	56	56	56	56	56	56	56	54	49	45	42	38
	30	56	56	56	56	56	56	56	56	54	49	45	42	38
	40	50	50	50	50	50	50	50	50	50	49	45	42	38
	50	45	45	45	45	45	45	45	45	45	45	45	42	38
	60	42	42	42	42	42	42	42	42	42	42	42	41	38
	70	39	39	39	39	39	39	39	39	39	39	39	39	38
	80	36	36	36	36	36	36	36	36	36	36	36	36	36
	90	34	34	34	34	34	34	34	34	34	34	34	34	34
Zones 2e & 3	0	94	94	94	94	92	88	82	73	65	59	54	50	46
	10	73	73	73	73	73	72	69	67	65	59	54	50	46
	20	56	56	56	56	56	56	56	56	55	54	53	50	46
	30	56	56	56	56	56	56	56	56	55	54	53	50	46
	40	50	50	50	50	50	50	50	50	50	49	48	47	46
	50	45	45	45	45	45	45	45	45	45	45	45	44	43
	60	42	42	42	42	42	42	42	42	42	42	42	41	41
	70	39	39	39	39	39	39	39	39	39	39	39	39	39
	80	36	36	36	36	36	36	36	36	36	36	36	36	36
	90	34	34	34	34	34	34	34	34	34	34	34	34	34

Notes:

1. Tables are based on critical rail span for load combinations as specified in chapter 2 of the ASCE 7-16 and allowable design loads per the 2015 Aluminum Design Manual.
2. Panels are assumed to be in portrait orientation with a maximum length of 82"

Structural ENGINUITY INC
Ingenuity in Engineering

SUNMODO®

Max Rail Spans for SunModo SMR100 System

Table 89b

Mean Roof Height: 15 < h ≤ 30 ft
Roof Angle: 7 < θ ≤ 20 degrees
Exposure Category: C

Panel Orientation: Portrait
North/South Support γ_E = 1.5
Roof Type : Hip h/B = ≤ 0.5

Roof Wind Zone	Ground Snow Load (psf)	Wind Speed (mph)												
		90	95	100	105	110	115	120	130	140	150	160	170	180
Zone 1	0	94	94	92	88	82	77	72	65	59	54	50	46	43
	10	73	73	73	73	73	72	69	65	59	54	50	46	43
	20	56	56	56	56	56	56	56	56	55	54	50	46	43
	30	56	56	56	56	56	56	56	56	55	54	50	46	43
	40	50	50	50	50	50	50	50	50	50	49	48	46	43
	50	45	45	45	45	45	45	45	45	45	45	45	44	43
	60	42	42	42	42	42	42	42	42	42	42	42	41	41
	70	39	39	39	39	39	39	39	39	39	39	39	39	39
	80	36	36	36	36	36	36	36	36	36	36	36	36	36
	90	34	34	34	34	34	34	34	34	34	34	34	34	34
Zone 2r	0	76	70	65	61	57	53	50	45	41	37	35	32	31
	10	73	70	65	61	57	53	50	45	41	37	35	32	31
	20	56	56	56	56	56	53	50	45	41	37	35	32	31
	30	56	56	56	56	56	53	50	45	41	37	35	32	31
	40	50	50	50	50	50	50	50	45	41	37	35	32	31
	50	45	45	45	45	45	45	45	45	41	37	35	32	31
	60	42	42	42	42	42	42	42	42	41	37	35	32	31
	70	39	39	39	39	39	39	39	39	39	37	35	32	31
	80	36	36	36	36	36	36	36	36	36	36	35	32	31
	90	34	34	34	34	34	34	34	34	34	34	34	32	31
Zones 2e & 3	0	91	86	80	74	69	65	61	55	49	45	41	38	36
	10	73	73	73	73	69	65	61	55	49	45	41	38	36
	20	56	56	56	56	56	56	56	55	49	45	41	38	36
	30	56	56	56	56	56	56	56	55	49	45	41	38	36
	40	50	50	50	50	50	50	50	50	49	45	41	38	36
	50	45	45	45	45	45	45	45	45	45	45	41	38	36
	60	42	42	42	42	42	42	42	42	42	42	41	38	36
	70	39	39	39	39	39	39	39	39	39	39	39	38	36
	80	36	36	36	36	36	36	36	36	36	36	36	36	36
	90	34	34	34	34	34	34	34	34	34	34	34	34	34

Notes:

1. Tables are based on critical rail span for load combinations as specified in chapter 2 of the ASCE 7-16 and allowable design loads per the 2015 Aluminum Design Manual.
2. Panels are assumed to be in portrait orientation with a maximum length of 82"

Structural ENGINUITY INC
Ingenuity in Engineering

SUNMODO®

Max Rail Spans for SunModo SMR100 System

Table 90a

Mean Roof Height: 15 < h ≤ 30 ft
Roof Angle: 7 < θ ≤ 20 degrees
Exposure Category: D

Panel Orientation: Portrait
North/South Support γ_E = 1
Roof Type : Hip h/B = ≤ 0.5

Roof Wind Zone	Ground Snow Load (psf)	Wind Speed (mph)												
		90	95	100	105	110	115	120	130	140	150	160	170	180
Zone 1	0	94	94	94	94	94	90	86	76	69	63	58	53	50
	10	73	73	73	72	69	68	67	65	63	62	58	53	50
	20	56	56	56	56	56	56	56	55	53	52	51	50	49
	30	56	56	56	56	56	56	56	55	53	52	51	50	49
	40	50	50	50	50	50	50	50	50	49	48	47	46	45
	50	45	45	45	45	45	45	45	45	45	45	44	43	42
	60	42	42	42	42	42	42	42	42	42	42	41	41	40
	70	39	39	39	39	39	39	39	39	39	39	39	38	38
	80	36	36	36	36	36	36	36	36	36	36	36	36	36
	90	34	34	34	34	34	34	34	34	34	34	34	34	34
Zone 2r	0	90	84	78	72	67	63	59	53	48	44	40	37	35
	10	73	73	73	72	67	63	59	53	48	44	40	37	35
	20	56	56	56	56	56	56	56	53	48	44	40	37	35
	30	56	56	56	56	56	56	56	53	48	44	40	37	35
	40	50	50	50	50	50	50	50	50	48	44	40	37	35
	50	45	45	45	45	45	45	45	45	45	44	40	37	35
	60	42	42	42	42	42	42	42	42	42	42	40	37	35
	70	39	39	39	39	39	39	39	39	39	39	39	37	35
	80	36	36	36	36	36	36	36	36	36	36	36	36	35
	90	34	34	34	34	34	34	34	34	34	34	34	34	34
Zones 2e & 3	0	94	94	92	88	83	77	72	64	58	53	48	45	42
	10	73	73	73	72	69	68	67	64	58	53	48	45	42
	20	56	56	56	56	56	56	56	55	53	52	48	45	42
	30	56	56	56	56	56	56	56	55	53	52	48	45	42
	40	50	50	50	50	50	50	50	50	49	48	47	45	42
	50	45	45	45	45	45	45	45	45	45	45	44	43	42
	60	42	42	42	42	42	42	42	42	42	42	41	41	40
	70	39	39	39	39	39	39	39	39	39	39	39	38	38
	80	36	36	36	36	36	36	36	36	36	36	36	36	36
	90	34	34	34	34	34	34	34	34	34	34	34	34	34

Notes:

1. Tables are based on critical rail span for load combinations as specified in chapter 2 of the ASCE 7-16 and allowable design loads per the 2015 Aluminum Design Manual.
2. Panels are assumed to be in portrait orientation with a maximum length of 82"

Structural ENGINUITY INC
Ingenuity in Engineering

SUNMODO®

Max Rail Spans for SunModo SMR100 System

Table 90b

Mean Roof Height: 15 < h ≤ 30 ft
Roof Angle: 7 < θ ≤ 20 degrees
Exposure Category: D

Panel Orientation: Portrait
North/South Support γ_E = 1.5
Roof Type : Hip h/B = ≤ 0.5

Roof Wind Zone	Ground Snow Load (psf)	Wind Speed (mph)												
		90	95	100	105	110	115	120	130	140	150	160	170	180
Zone 1	0	94	89	84	78	72	68	64	58	53	49	45	42	39
	10	73	73	73	72	69	68	64	58	53	49	45	42	39
	20	56	56	56	56	56	56	56	55	53	49	45	42	39
	30	56	56	56	56	56	56	56	55	53	49	45	42	39
	40	50	50	50	50	50	50	50	50	49	48	45	42	39
	50	45	45	45	45	45	45	45	45	45	45	44	42	39
	60	42	42	42	42	42	42	42	42	42	42	41	41	39
	70	39	39	39	39	39	39	39	39	39	39	39	38	38
	80	36	36	36	36	36	36	36	36	36	36	36	36	36
	90	34	34	34	34	34	34	34	34	34	34	34	34	34
Zone 2r	0	67	62	58	54	51	48	45	40	37	34	32	30	28
	10	67	62	58	54	51	48	45	40	37	34	32	30	28
	20	56	56	56	54	51	48	45	40	37	34	32	30	28
	30	56	56	56	54	51	48	45	40	37	34	32	30	28
	40	50	50	50	50	50	48	45	40	37	34	32	30	28
	50	45	45	45	45	45	45	45	40	37	34	32	30	28
	60	42	42	42	42	42	42	42	40	37	34	32	30	28
	70	39	39	39	39	39	39	39	39	37	34	32	30	28
	80	36	36	36	36	36	36	36	36	36	34	32	30	28
	90	34	34	34	34	34	34	34	34	34	34	32	30	28
Zones 2e & 3	0	82	76	70	65	61	58	54	49	44	40	37	34	32
	10	73	73	70	65	61	58	54	49	44	40	37	34	32
	20	56	56	56	56	56	56	54	49	44	40	37	34	32
	30	56	56	56	56	56	56	54	49	44	40	37	34	32
	40	50	50	50	50	50	50	50	49	44	40	37	34	32
	50	45	45	45	45	45	45	45	45	44	40	37	34	32
	60	42	42	42	42	42	42	42	42	42	40	37	34	32
	70	39	39	39	39	39	39	39	39	39	39	37	34	32
	80	36	36	36	36	36	36	36	36	36	36	36	34	32
	90	34	34	34	34	34	34	34	34	34	34	34	34	32

Notes:

1. Tables are based on critical rail span for load combinations as specified in chapter 2 of the ASCE 7-16 and allowable design loads per the 2015 Aluminum Design Manual.
2. Panels are assumed to be in portrait orientation with a maximum length of 82"

Structural ENGINUITY INC
Ingenuity in Engineering

SUNMODO®

Max Rail Spans for SunModo SMR100 System

Table 91a

Mean Roof Height: 15 < h ≤ 30 ft
Roof Angle: 20 < θ ≤ 27 degrees
Exposure Category: B

Panel Orientation: Portrait
North/South Support γ_E = 1
Roof Type : Hip

Roof Wind Zone	Ground Snow Load (psf)	Wind Speed (mph)												
		90	95	100	105	110	115	120	130	140	150	160	170	180
Zone 1	0	94	94	94	94	94	94	94	94	94	92	87	81	73
	10	79	79	79	79	79	79	79	79	78	76	74	73	71
	20	66	66	66	66	66	66	66	66	65	64	63	62	61
	30	56	56	56	56	56	56	56	56	56	56	56	55	54
	40	50	50	50	50	50	50	50	50	50	50	50	50	49
	50	45	45	45	45	45	45	45	45	45	45	45	45	45
	60	42	42	42	42	42	42	42	42	42	42	42	42	42
	70	39	39	39	39	39	39	39	39	39	39	39	39	39
	80	36	36	36	36	36	36	36	36	36	36	36	36	36
	90	35	35	35	35	35	35	35	35	35	35	35	35	35
Zones 2e, 2r, & 3	0	94	94	94	94	94	94	94	89	82	73	66	60	55
	10	79	79	79	79	79	79	79	79	78	73	66	60	55
	20	66	66	66	66	66	66	66	66	65	64	63	60	55
	30	56	56	56	56	56	56	56	56	56	56	56	55	54
	40	50	50	50	50	50	50	50	50	50	50	50	50	49
	50	45	45	45	45	45	45	45	45	45	45	45	45	45
	60	42	42	42	42	42	42	42	42	42	42	42	42	42
	70	39	39	39	39	39	39	39	39	39	39	39	39	39
	80	36	36	36	36	36	36	36	36	36	36	36	36	36
	90	35	35	35	35	35	35	35	35	35	35	35	35	35

Notes:

1. Tables are based on critical rail span for load combinations as specified in chapter 2 of the ASCE 7-16 and allowable design loads per the 2015 Aluminum Design Manual.
2. Panels are assumed to be in portrait orientation with a maximum length of 82"

Structural ENGINUITY INC
Ingenuity in Engineering

SUNMODO®

Max Rail Spans for SunModo SMR100 System

Table 91b	Mean Roof Height: 15 < h ≤ 30 ft Roof Angle: 20 < θ ≤ 27 degrees Exposure Category: B	Panel Orientation: Portrait North/South Support γ_E = 1.5 Roof Type : Hip

Roof Wind Zone	Ground Snow Load (psf)	Wind Speed (mph)												
		90	95	100	105	110	115	120	130	140	150	160	170	180
Zone 1	0	94	94	94	94	94	94	94	87	80	71	64	59	54
	10	79	79	79	79	79	79	79	79	78	71	64	59	54
	20	66	66	66	66	66	66	66	66	65	64	63	59	54
	30	56	56	56	56	56	56	56	56	56	56	56	55	54
	40	50	50	50	50	50	50	50	50	50	50	50	50	49
	50	45	45	45	45	45	45	45	45	45	45	45	45	45
	60	42	42	42	42	42	42	42	42	42	42	42	42	42
	70	39	39	39	39	39	39	39	39	39	39	39	39	39
	80	36	36	36	36	36	36	36	36	36	36	36	36	36
	90	35	35	35	35	35	35	35	35	35	35	35	35	35
Zones 2e, 2r, & 3	0	94	94	94	89	86	81	75	67	60	54	49	45	42
	10	79	79	79	79	79	79	75	67	60	54	49	45	42
	20	66	66	66	66	66	66	66	66	60	54	49	45	42
	30	56	56	56	56	56	56	56	56	56	54	49	45	42
	40	50	50	50	50	50	50	50	50	50	50	49	45	42
	50	45	45	45	45	45	45	45	45	45	45	45	45	42
	60	42	42	42	42	42	42	42	42	42	42	42	42	42
	70	39	39	39	39	39	39	39	39	39	39	39	39	39
	80	36	36	36	36	36	36	36	36	36	36	36	36	36
	90	35	35	35	35	35	35	35	35	35	35	35	35	35

Notes:

1. Tables are based on critical rail span for load combinations as specified in chapter 2 of the ASCE 7-16 and allowable design loads per the 2015 Aluminum Design Manual.
2. Panels are assumed to be in portrait orientation with a maximum length of 82"

Structural ENGINUITY INC
Ingenuity in Engineering

SUNMODO®

Max Rail Spans for SunModo SMR100 System

Table 92a	Mean Roof Height: 15 < h ≤ 30 ft Roof Angle: 20 < θ ≤ 27 degrees Exposure Category: C	Panel Orientation: Portrait North/South Support γ_E = 1 Roof Type : Hip

Roof Wind Zone	Ground Snow Load (psf)	Wind Speed (mph)												
		90	95	100	105	110	115	120	130	140	150	160	170	180
Zone 1	0	94	94	94	94	94	94	94	90	84	75	68	62	57
	10	79	79	79	79	79	78	77	75	73	71	68	62	57
	20	66	66	66	66	66	66	65	64	62	61	60	58	57
	30	56	56	56	56	56	56	56	56	55	54	53	52	51
	40	50	50	50	50	50	50	50	50	50	50	49	48	47
	50	45	45	45	45	45	45	45	45	45	45	45	44	44
	60	42	42	42	42	42	42	42	42	42	42	42	42	41
	70	39	39	39	39	39	39	39	39	39	39	39	39	39
	80	36	36	36	36	36	36	36	36	36	36	36	36	36
	90	35	35	35	35	35	35	35	35	35	35	35	35	35
Zones 2e, 2r, & 3	0	94	94	94	92	88	85	80	70	63	57	52	47	44
	10	79	79	79	79	79	78	77	70	63	57	52	47	44
	20	66	66	66	66	66	66	65	64	62	57	52	47	44
	30	56	56	56	56	56	56	56	56	55	54	52	47	44
	40	50	50	50	50	50	50	50	50	50	50	49	47	44
	50	45	45	45	45	45	45	45	45	45	45	45	44	44
	60	42	42	42	42	42	42	42	42	42	42	42	42	41
	70	39	39	39	39	39	39	39	39	39	39	39	39	39
	80	36	36	36	36	36	36	36	36	36	36	36	36	36
	90	35	35	35	35	35	35	35	35	35	35	35	35	35

Notes:

1. Tables are based on critical rail span for load combinations as specified in chapter 2 of the ASCE 7-16 and allowable design loads per the 2015 Aluminum Design Manual.
2. Panels are assumed to be in portrait orientation with a maximum length of 82"

Structural ENGINUITY INC
Ingenuity in Engineering

SUNMODO®

Max Rail Spans for SunModo SMR100 System

Table 92b	Mean Roof Height: 15 < h ≤ 30 ft Roof Angle: 20 < θ ≤ 27 degrees Exposure Category: C	Panel Orientation: Portrait North/South Support γ_E = 1.5 Roof Type : Hip

Roof Wind Zone	Ground Snow Load (psf)	Wind Speed (mph)												
		90	95	100	105	110	115	120	130	140	150	160	170	180
Zone 1	0	94	94	94	91	87	84	78	68	61	55	50	46	43
	10	79	79	79	79	79	78	77	68	61	55	50	46	43
	20	66	66	66	66	66	66	65	64	61	55	50	46	43
	30	56	56	56	56	56	56	56	56	55	54	50	46	43
	40	50	50	50	50	50	50	50	50	50	50	49	46	43
	50	45	45	45	45	45	45	45	45	45	45	45	44	43
	60	42	42	42	42	42	42	42	42	42	42	42	42	41
	70	39	39	39	39	39	39	39	39	39	39	39	39	39
	80	36	36	36	36	36	36	36	36	36	36	36	36	36
	90	35	35	35	35	35	35	35	35	35	35	35	35	35
Zones 2e, 2r, & 3	0	88	84	77	71	66	62	58	52	47	43	39	36	34
	10	79	79	77	71	66	62	58	52	47	43	39	36	34
	20	66	66	66	66	66	62	58	52	47	43	39	36	34
	30	56	56	56	56	56	56	56	52	47	43	39	36	34
	40	50	50	50	50	50	50	50	50	47	43	39	36	34
	50	45	45	45	45	45	45	45	45	45	43	39	36	34
	60	42	42	42	42	42	42	42	42	42	42	39	36	34
	70	39	39	39	39	39	39	39	39	39	39	39	36	34
	80	36	36	36	36	36	36	36	36	36	36	36	36	34
	90	35	35	35	35	35	35	35	35	35	35	35	35	34

Notes:

1. Tables are based on critical rail span for load combinations as specified in chapter 2 of the ASCE 7-16 and allowable design loads per the 2015 Aluminum Design Manual.
2. Panels are assumed to be in portrait orientation with a maximum length of 82"

Structural ENGINUITY INC
Ingenuity in Engineering

SUNMODO®

Max Rail Spans for SunModo SMR100 System

Table 93a

Mean Roof Height: 15 < h ≤ 30 ft
Roof Angle: 20 < θ ≤ 27 degrees
Exposure Category: D

Panel Orientation: Portrait
North/South Support γ_E = 1
Roof Type : Hip

Roof Wind Zone	Ground Snow Load (psf)	Wind Speed (mph)												
		90	95	100	105	110	115	120	130	140	150	160	170	180
Zone 1	0	94	94	94	94	94	93	90	83	73	66	60	54	50
	10	79	79	79	79	78	76	75	73	71	66	60	54	50
	20	66	66	66	66	65	64	64	62	61	59	58	54	50
	30	56	56	56	56	56	56	56	55	54	53	52	51	49
	40	50	50	50	50	50	50	50	50	49	48	48	47	46
	50	45	45	45	45	45	45	45	45	45	45	44	43	43
	60	42	42	42	42	42	42	42	42	42	42	41	41	40
	70	39	39	39	39	39	39	39	39	39	39	39	39	38
	80	36	36	36	36	36	36	36	36	36	36	36	36	36
	90	35	35	35	35	35	35	35	35	35	35	35	35	35
Zones 2e, 2r, & 3	0	94	94	89	85	80	75	70	62	55	50	46	42	39
	10	79	79	79	79	78	75	70	62	55	50	46	42	39
	20	66	66	66	66	65	64	64	62	55	50	46	42	39
	30	56	56	56	56	56	56	56	55	54	50	46	42	39
	40	50	50	50	50	50	50	50	50	49	48	46	42	39
	50	45	45	45	45	45	45	45	45	45	45	44	42	39
	60	42	42	42	42	42	42	42	42	42	42	41	41	39
	70	39	39	39	39	39	39	39	39	39	39	39	39	38
	80	36	36	36	36	36	36	36	36	36	36	36	36	36
	90	35	35	35	35	35	35	35	35	35	35	35	35	35

Notes:

1. Tables are based on critical rail span for load combinations as specified in chapter 2 of the ASCE 7-16 and allowable design loads per the 2015 Aluminum Design Manual.
2. Panels are assumed to be in portrait orientation with a maximum length of 82"

Structural ENGINUITY INC
Ingenuity in Engineering

SUNMODO®

Max Rail Spans for SunModo SMR100 System

Table 93b	Mean Roof Height: 15 < h ≤ 30 ft Roof Angle: 20 < θ ≤ 27 degrees Exposure Category: D	Panel Orientation: Portrait North/South Support γ_E = 1.5 Roof Type : Hip

Roof Wind Zone	Ground Snow Load (psf)	Wind Speed (mph)												
		90	95	100	105	110	115	120	130	140	150	160	170	180
Zone 1	0	94	93	88	84	78	73	68	60	54	49	45	41	38
	10	79	79	79	79	78	73	68	60	54	49	45	41	38
	20	66	66	66	66	65	64	64	60	54	49	45	41	38
	30	56	56	56	56	56	56	56	55	54	49	45	41	38
	40	50	50	50	50	50	50	50	50	49	48	45	41	38
	50	45	45	45	45	45	45	45	45	45	45	44	41	38
	60	42	42	42	42	42	42	42	42	42	42	41	41	38
	70	39	39	39	39	39	39	39	39	39	39	39	39	38
	80	36	36	36	36	36	36	36	36	36	36	36	36	36
	90	35	35	35	35	35	35	35	35	35	35	35	35	35
Zones 2e, 2r, & 3	0	80	73	68	63	59	55	52	46	42	38	35	33	31
	10	79	73	68	63	59	55	52	46	42	38	35	33	31
	20	66	66	66	63	59	55	52	46	42	38	35	33	31
	30	56	56	56	56	56	55	52	46	42	38	35	33	31
	40	50	50	50	50	50	50	50	46	42	38	35	33	31
	50	45	45	45	45	45	45	45	45	42	38	35	33	31
	60	42	42	42	42	42	42	42	42	42	38	35	33	31
	70	39	39	39	39	39	39	39	39	39	38	35	33	31
	80	36	36	36	36	36	36	36	36	36	36	35	33	31
	90	35	35	35	35	35	35	35	35	35	35	35	33	31

Notes:

1. Tables are based on critical rail span for load combinations as specified in chapter 2 of the ASCE 7-16 and allowable design loads per the 2015 Aluminum Design Manual.
2. Panels are assumed to be in portrait orientation with a maximum length of 82"

Structural ENGINUITY INC
Ingenuity in Engineering

SUNMODO®

Max Rail Spans for SunModo SMR100 System

Table 94a

Mean Roof Height: 15 < h ≤ 30 ft
Roof Angle: 27 < θ ≤ 45 degrees
Exposure Category: B

Panel Orientation: Portrait
North/South Support γ_E = 1
Roof Type : Hip

Roof Wind Zone	Ground Snow Load (psf)	Wind Speed (mph)												
		90	95	100	105	110	115	120	130	140	150	160	170	180
Zone 1	0	94	94	94	94	94	94	94	94	93	88	83	77	70
	10	78	78	78	78	78	78	78	78	78	77	75	73	70
	20	68	68	68	68	68	68	68	68	67	66	64	63	62
	30	58	58	58	58	58	58	58	58	58	58	57	57	56
	40	52	52	52	52	52	52	52	52	52	52	52	52	51
	50	47	47	47	47	47	47	47	47	47	47	47	47	47
	60	43	43	43	43	43	43	43	43	43	43	43	43	43
	70	41	41	41	41	41	41	41	41	41	41	41	41	41
	80	38	38	38	38	38	38	38	38	38	38	38	38	38
	90	36	36	36	36	36	36	36	36	36	36	36	36	36
Zone 2e	0	94	94	94	94	94	94	94	94	94	87	82	74	66
	10	78	78	78	78	78	78	78	78	78	77	75	73	66
	20	68	68	68	68	68	68	68	68	67	66	64	63	62
	30	58	58	58	58	58	58	58	58	58	58	57	57	56
	40	52	52	52	52	52	52	52	52	52	52	52	52	51
	50	47	47	47	47	47	47	47	47	47	47	47	47	47
	60	43	43	43	43	43	43	43	43	43	43	43	43	43
	70	41	41	41	41	41	41	41	41	41	41	41	41	41
	80	38	38	38	38	38	38	38	38	38	38	38	38	38
	90	36	36	36	36	36	36	36	36	36	36	36	36	36
Zone 2r	0	94	94	94	94	94	94	92	85	80	70	63	57	52
	10	78	78	78	78	78	78	78	78	78	70	63	57	52
	20	68	68	68	68	68	68	68	68	67	66	63	57	52
	30	58	58	58	58	58	58	58	58	58	58	57	57	52
	40	52	52	52	52	52	52	52	52	52	52	52	52	51
	50	47	47	47	47	47	47	47	47	47	47	47	47	47
	60	43	43	43	43	43	43	43	43	43	43	43	43	43
	70	41	41	41	41	41	41	41	41	41	41	41	41	41
	80	38	38	38	38	38	38	38	38	38	38	38	38	38
	90	36	36	36	36	36	36	36	36	36	36	36	36	36
Zone 3	0	94	94	94	94	94	94	94	89	82	73	64	57	51
	10	78	78	78	78	78	78	78	78	78	73	64	57	51
	20	68	68	68	68	68	68	68	68	67	66	64	57	51
	30	58	58	58	58	58	58	58	58	58	58	57	57	51
	40	52	52	52	52	52	52	52	52	52	52	52	52	51
	50	47	47	47	47	47	47	47	47	47	47	47	47	47
	60	43	43	43	43	43	43	43	43	43	43	43	43	43
	70	41	41	41	41	41	41	41	41	41	41	41	41	41
	80	38	38	38	38	38	38	38	38	38	38	38	38	38
	90	36	36	36	36	36	36	36	36	36	36	36	36	36

Notes:

1. Tables are based on critical rail span for load combinations as specified in chapter 2 of the ASCE 7-16 and allowable design loads per the 2015 Aluminum Design Manual.
2. Panels are assumed to be in portrait orientation with a maximum length of 82"

Structural ENGINUITY INC
Ingenuity in Engineering

SUNMODO®

Max Rail Spans for SunModo SMR100 System

Table 94b

Mean Roof Height: 15 < h ≤ 30 ft
Roof Angle: 27 < θ ≤ 45 degrees
Exposure Category: B

Panel Orientation: Portrait
North/South Support γ_E = 1.5
Roof Type : Hip

Roof Wind Zone	Ground Snow Load (psf)	Wind Speed (mph)												
		90	95	100	105	110	115	120	130	140	150	160	170	180
Zone 1	0	94	94	94	94	94	93	89	83	76	68	61	56	51
	10	78	78	78	78	78	78	78	78	76	68	61	56	51
	20	68	68	68	68	68	68	68	68	67	66	61	56	51
	30	58	58	58	58	58	58	58	58	58	58	57	56	51
	40	52	52	52	52	52	52	52	52	52	52	52	52	51
	50	47	47	47	47	47	47	47	47	47	47	47	47	47
	60	43	43	43	43	43	43	43	43	43	43	43	43	43
	70	41	41	41	41	41	41	41	41	41	41	41	41	41
	80	38	38	38	38	38	38	38	38	38	38	38	38	38
	90	36	36	36	36	36	36	36	36	36	36	36	36	36
Zone 2e	0	94	94	94	94	94	93	89	82	73	63	56	51	46
	10	78	78	78	78	78	78	78	78	73	63	56	51	46
	20	68	68	68	68	68	68	68	68	67	63	56	51	46
	30	58	58	58	58	58	58	58	58	58	58	56	51	46
	40	52	52	52	52	52	52	52	52	52	52	52	51	46
	50	47	47	47	47	47	47	47	47	47	47	47	47	46
	60	43	43	43	43	43	43	43	43	43	43	43	43	43
	70	41	41	41	41	41	41	41	41	41	41	41	41	41
	80	38	38	38	38	38	38	38	38	38	38	38	38	38
	90	36	36	36	36	36	36	36	36	36	36	36	36	36
Zone 2r	0	94	94	90	86	83	79	73	63	56	50	46	42	39
	10	78	78	78	78	78	78	73	63	56	50	46	42	39
	20	68	68	68	68	68	68	68	63	56	50	46	42	39
	30	58	58	58	58	58	58	58	58	56	50	46	42	39
	40	52	52	52	52	52	52	52	52	52	50	46	42	39
	50	47	47	47	47	47	47	47	47	47	47	46	42	39
	60	43	43	43	43	43	43	43	43	43	43	43	42	39
	70	41	41	41	41	41	41	41	41	41	41	41	41	39
	80	38	38	38	38	38	38	38	38	38	38	38	38	38
	90	36	36	36	36	36	36	36	36	36	36	36	36	36
Zone 3	0	94	94	94	90	86	82	77	64	56	49	44	40	37
	10	78	78	78	78	78	78	77	64	56	49	44	40	37
	20	68	68	68	68	68	68	68	64	56	49	44	40	37
	30	58	58	58	58	58	58	58	58	56	49	44	40	37
	40	52	52	52	52	52	52	52	52	52	49	44	40	37
	50	47	47	47	47	47	47	47	47	47	47	44	40	37
	60	43	43	43	43	43	43	43	43	43	43	43	40	37
	70	41	41	41	41	41	41	41	41	41	41	41	40	37
	80	38	38	38	38	38	38	38	38	38	38	38	38	37
	90	36	36	36	36	36	36	36	36	36	36	36	36	36

Notes:

1. Tables are based on critical rail span for load combinations as specified in chapter 2 of the ASCE 7-16 and allowable design loads per the 2015 Aluminum Design Manual.
2. Panels are assumed to be in portrait orientation with a maximum length of 82"

Structural ENGINUITY INC
Ingenuity in Engineering

SUNMODO®

Max Rail Spans for SunModo SMR100 System

Table 95a

Mean Roof Height: 15 < h ≤ 30 ft
Roof Angle: 27 < θ ≤ 45 degrees
Exposure Category: C

Panel Orientation: Portrait
North/South Support γ_E = 1
Roof Type : Hip

Roof Wind Zone	Ground Snow Load (psf)	Wind Speed (mph)												
		90	95	100	105	110	115	120	130	140	150	160	170	180
Zone 1	0	94	94	94	94	94	94	92	86	80	72	65	59	54
	10	78	78	78	78	78	78	78	76	74	72	65	59	54
	20	68	68	68	68	68	67	66	65	64	62	61	59	54
	30	58	58	58	58	58	58	58	58	57	56	55	54	53
	40	52	52	52	52	52	52	52	52	52	51	50	50	49
	50	47	47	47	47	47	47	47	47	47	47	47	46	45
	60	43	43	43	43	43	43	43	43	43	43	43	43	43
	70	41	41	41	41	41	41	41	41	41	41	41	41	40
	80	38	38	38	38	38	38	38	38	38	38	38	38	38
	90	36	36	36	36	36	36	36	36	36	36	36	36	36
Zone 2e	0	94	94	94	94	94	94	92	85	78	68	60	54	49
	10	78	78	78	78	78	78	78	76	74	68	60	54	49
	20	68	68	68	68	68	67	66	65	64	62	60	54	49
	30	58	58	58	58	58	58	58	58	57	56	55	54	49
	40	52	52	52	52	52	52	52	52	52	51	50	50	49
	50	47	47	47	47	47	47	47	47	47	47	47	46	45
	60	43	43	43	43	43	43	43	43	43	43	43	43	43
	70	41	41	41	41	41	41	41	41	41	41	41	41	40
	80	38	38	38	38	38	38	38	38	38	38	38	38	38
	90	36	36	36	36	36	36	36	36	36	36	36	36	36
Zone 2r	0	94	94	93	89	85	82	78	67	59	53	48	44	40
	10	78	78	78	78	78	78	78	67	59	53	48	44	40
	20	68	68	68	68	68	67	66	65	59	53	48	44	40
	30	58	58	58	58	58	58	58	58	57	53	48	44	40
	40	52	52	52	52	52	52	52	52	52	51	48	44	40
	50	47	47	47	47	47	47	47	47	47	47	47	44	40
	60	43	43	43	43	43	43	43	43	43	43	43	43	40
	70	41	41	41	41	41	41	41	41	41	41	41	41	40
	80	38	38	38	38	38	38	38	38	38	38	38	38	38
	90	36	36	36	36	36	36	36	36	36	36	36	36	36
Zone 3	0	94	94	94	94	89	85	81	69	60	53	47	42	39
	10	78	78	78	78	78	78	78	69	60	53	47	42	39
	20	68	68	68	68	68	67	66	65	60	53	47	42	39
	30	58	58	58	58	58	58	58	58	57	53	47	42	39
	40	52	52	52	52	52	52	52	52	52	51	47	42	39
	50	47	47	47	47	47	47	47	47	47	47	47	42	39
	60	43	43	43	43	43	43	43	43	43	43	43	42	39
	70	41	41	41	41	41	41	41	41	41	41	41	41	39
	80	38	38	38	38	38	38	38	38	38	38	38	38	38
	90	36	36	36	36	36	36	36	36	36	36	36	36	36

Notes:

1. Tables are based on critical rail span for load combinations as specified in chapter 2 of the ASCE 7-16 and allowable design loads per the 2015 Aluminum Design Manual.
2. Panels are assumed to be in portrait orientation with a maximum length of 82"

Structural ENGINUITY INC
Ingenuity in Engineering

SUNMODO®

Max Rail Spans for SunModo SMR100 System

Table 95b

Mean Roof Height: 15 < h ≤ 30 ft
Roof Angle: 27 < θ ≤ 45 degrees
Exposure Category: C

Panel Orientation: Portrait
North/South Support γ_E = 1.5
Roof Type : Hip

Roof Wind Zone	Ground Snow Load (psf)	Wind Speed (mph)												
		90	95	100	105	110	115	120	130	140	150	160	170	180
Zone 1	0	94	94	90	87	83	80	74	65	58	52	48	44	40
	10	78	78	78	78	78	78	74	65	58	52	48	44	40
	20	68	68	68	68	68	67	66	65	58	52	48	44	40
	30	58	58	58	58	58	58	58	58	57	52	48	44	40
	40	52	52	52	52	52	52	52	52	52	51	48	44	40
	50	47	47	47	47	47	47	47	47	47	47	47	44	40
	60	43	43	43	43	43	43	43	43	43	43	43	43	40
	70	41	41	41	41	41	41	41	41	41	41	41	41	40
	80	38	38	38	38	38	38	38	38	38	38	38	38	38
	90	36	36	36	36	36	36	36	36	36	36	36	36	36
Zone 2e	0	94	94	90	86	82	77	71	61	53	47	43	39	36
	10	78	78	78	78	78	77	71	61	53	47	43	39	36
	20	68	68	68	68	68	67	66	61	53	47	43	39	36
	30	58	58	58	58	58	58	58	58	53	47	43	39	36
	40	52	52	52	52	52	52	52	52	52	47	43	39	36
	50	47	47	47	47	47	47	47	47	47	47	43	39	36
	60	43	43	43	43	43	43	43	43	43	43	43	39	36
	70	41	41	41	41	41	41	41	41	41	41	41	39	36
	80	38	38	38	38	38	38	38	38	38	38	38	38	36
	90	36	36	36	36	36	36	36	36	36	36	36	36	36
Zone 2r	0	85	81	75	68	63	59	55	48	43	39	36	33	31
	10	78	78	75	68	63	59	55	48	43	39	36	33	31
	20	68	68	68	68	63	59	55	48	43	39	36	33	31
	30	58	58	58	58	58	58	55	48	43	39	36	33	31
	40	52	52	52	52	52	52	52	48	43	39	36	33	31
	50	47	47	47	47	47	47	47	47	43	39	36	33	31
	60	43	43	43	43	43	43	43	43	43	39	36	33	31
	70	41	41	41	41	41	41	41	41	41	39	36	33	31
	80	38	38	38	38	38	38	38	38	38	38	36	33	31
	90	36	36	36	36	36	36	36	36	36	36	36	33	31
Zone 3	0	89	84	79	71	64	59	54	47	42	38	34	31	29
	10	78	78	78	71	64	59	54	47	42	38	34	31	29
	20	68	68	68	68	64	59	54	47	42	38	34	31	29
	30	58	58	58	58	58	58	54	47	42	38	34	31	29
	40	52	52	52	52	52	52	52	47	42	38	34	31	29
	50	47	47	47	47	47	47	47	47	42	38	34	31	29
	60	43	43	43	43	43	43	43	43	42	38	34	31	29
	70	41	41	41	41	41	41	41	41	41	38	34	31	29
	80	38	38	38	38	38	38	38	38	38	38	34	31	29
	90	36	36	36	36	36	36	36	36	36	36	34	31	29

Notes:

1. Tables are based on critical rail span for load combinations as specified in chapter 2 of the ASCE 7-16 and allowable design loads per the 2015 Aluminum Design Manual.
2. Panels are assumed to be in portrait orientation with a maximum length of 82"

Structural ENGINUITY INC
Ingenuity in Engineering

SUNMODO®

Max Rail Spans for SunModo SMR100 System

Table 96a

Mean Roof Height: 15 < h ≤ 30 ft
Roof Angle: 27 < θ ≤ 45 degrees
Exposure Category: D

Panel Orientation: Portrait
North/South Support γ_E = 1
Roof Type : Hip

Roof Wind Zone	Ground Snow Load (psf)	Wind Speed (mph)												
		90	95	100	105	110	115	120	130	140	150	160	170	180
Zone 1	0	94	94	94	94	92	89	85	79	70	63	57	52	48
	10	78	78	78	78	78	77	76	74	70	63	57	52	48
	20	68	68	68	67	66	66	65	64	62	61	57	52	48
	30	58	58	58	58	58	58	58	57	56	55	53	52	48
	40	52	52	52	52	52	52	52	52	51	50	49	48	47
	50	47	47	47	47	47	47	47	47	47	47	46	45	44
	60	43	43	43	43	43	43	43	43	43	43	43	42	42
	70	41	41	41	41	41	41	41	41	41	41	41	40	40
	80	38	38	38	38	38	38	38	38	38	38	38	38	38
	90	36	36	36	36	36	36	36	36	36	36	36	36	36
Zone 2e	0	94	94	94	94	93	88	85	77	66	58	52	47	43
	10	78	78	78	78	78	77	76	74	66	58	52	47	43
	20	68	68	68	67	66	66	65	64	62	58	52	47	43
	30	58	58	58	58	58	58	58	57	56	55	52	47	43
	40	52	52	52	52	52	52	52	52	51	50	49	47	43
	50	47	47	47	47	47	47	47	47	47	47	46	45	43
	60	43	43	43	43	43	43	43	43	43	43	43	42	42
	70	41	41	41	41	41	41	41	41	41	41	41	40	40
	80	38	38	38	38	38	38	38	38	38	38	38	38	38
	90	36	36	36	36	36	36	36	36	36	36	36	36	36
Zone 2r	0	94	90	86	82	78	72	67	58	52	47	42	39	36
	10	78	78	78	78	78	72	67	58	52	47	42	39	36
	20	68	68	68	67	66	66	65	58	52	47	42	39	36
	30	58	58	58	58	58	58	58	57	52	47	42	39	36
	40	52	52	52	52	52	52	52	52	51	47	42	39	36
	50	47	47	47	47	47	47	47	47	47	47	42	39	36
	60	43	43	43	43	43	43	43	43	43	43	42	39	36
	70	41	41	41	41	41	41	41	41	41	41	41	39	36
	80	38	38	38	38	38	38	38	38	38	38	38	38	36
	90	36	36	36	36	36	36	36	36	36	36	36	36	36
Zone 3	0	94	94	90	86	81	75	69	59	51	45	41	37	34
	10	78	78	78	78	78	75	69	59	51	45	41	37	34
	20	68	68	68	67	66	66	65	59	51	45	41	37	34
	30	58	58	58	58	58	58	58	57	51	45	41	37	34
	40	52	52	52	52	52	52	52	52	51	45	41	37	34
	50	47	47	47	47	47	47	47	47	47	45	41	37	34
	60	43	43	43	43	43	43	43	43	43	43	41	37	34
	70	41	41	41	41	41	41	41	41	41	41	41	37	34
	80	38	38	38	38	38	38	38	38	38	38	38	37	34
	90	36	36	36	36	36	36	36	36	36	36	36	36	34

Notes:

1. Tables are based on critical rail span for load combinations as specified in chapter 2 of the ASCE 7-16 and allowable design loads per the 2015 Aluminum Design Manual.
2. Panels are assumed to be in portrait orientation with a maximum length of 82"

Structural ENGINUITY INC
Ingenuity in Engineering

SUNMODO®

Max Rail Spans for SunModo SMR100 System

Table 96b

Mean Roof Height: 15 < h ≤ 30 ft
Roof Angle: 27 < θ ≤ 45 degrees
Exposure Category: D

Panel Orientation: Portrait
North/South Support γ_E = 1.5
Roof Type : Hip

Roof Wind Zone	Ground Snow Load (psf)	Wind Speed (mph)												
		90	95	100	105	110	115	120	130	140	150	160	170	180
Zone 1	0	92	88	84	80	75	69	65	57	51	46	42	39	36
	10	78	78	78	78	75	69	65	57	51	46	42	39	36
	20	68	68	68	67	66	66	65	57	51	46	42	39	36
	30	58	58	58	58	58	58	58	57	51	46	42	39	36
	40	52	52	52	52	52	52	52	52	51	46	42	39	36
	50	47	47	47	47	47	47	47	47	47	46	42	39	36
	60	43	43	43	43	43	43	43	43	43	43	42	39	36
	70	41	41	41	41	41	41	41	41	41	41	41	39	36
	80	38	38	38	38	38	38	38	38	38	38	38	38	36
	90	36	36	36	36	36	36	36	36	36	36	36	36	36
Zone 2e	0	93	87	83	78	71	65	60	52	46	41	38	34	32
	10	78	78	78	78	71	65	60	52	46	41	38	34	32
	20	68	68	68	67	66	65	60	52	46	41	38	34	32
	30	58	58	58	58	58	58	58	52	46	41	38	34	32
	40	52	52	52	52	52	52	52	52	46	41	38	34	32
	50	47	47	47	47	47	47	47	47	46	41	38	34	32
	60	43	43	43	43	43	43	43	43	43	41	38	34	32
	70	41	41	41	41	41	41	41	41	41	41	38	34	32
	80	38	38	38	38	38	38	38	38	38	38	38	34	32
	90	36	36	36	36	36	36	36	36	36	36	36	34	32
Zone 2r	0	78	70	64	59	55	51	48	43	38	35	32	30	28
	10	78	70	64	59	55	51	48	43	38	35	32	30	28
	20	68	68	64	59	55	51	48	43	38	35	32	30	28
	30	58	58	58	58	55	51	48	43	38	35	32	30	28
	40	52	52	52	52	52	51	48	43	38	35	32	30	28
	50	47	47	47	47	47	47	47	43	38	35	32	30	28
	60	43	43	43	43	43	43	43	43	38	35	32	30	28
	70	41	41	41	41	41	41	41	41	38	35	32	30	28
	80	38	38	38	38	38	38	38	38	38	35	32	30	28
	90	36	36	36	36	36	36	36	36	36	35	32	30	28
Zone 3	0	81	73	66	60	55	51	47	41	37	33	31	28	26
	10	78	73	66	60	55	51	47	41	37	33	31	28	26
	20	68	68	66	60	55	51	47	41	37	33	31	28	26
	30	58	58	58	58	55	51	47	41	37	33	31	28	26
	40	52	52	52	52	52	51	47	41	37	33	31	28	26
	50	47	47	47	47	47	47	47	41	37	33	31	28	26
	60	43	43	43	43	43	43	43	41	37	33	31	28	26
	70	41	41	41	41	41	41	41	41	37	33	31	28	26
	80	38	38	38	38	38	38	38	38	37	33	31	28	26
	90	36	36	36	36	36	36	36	36	36	33	31	28	26

Notes:

1. Tables are based on critical rail span for load combinations as specified in chapter 2 of the ASCE 7-16 and allowable design loads per the 2015 Aluminum Design Manual.
2. Panels are assumed to be in portrait orientation with a maximum length of 82"

Structural ENGINUITY INC
Ingenuity in Engineering

SUNMODO®

Max Rail Spans for SunModo SMR100 System

Table 97a

Mean Roof Height: h ≤ 15 ft
Roof Angle: 0 < θ ≤ 7 degrees
Exposure Category: B

Panel Orientation: Landscape
North/South Support γ_E = 1
Roof Type : Gable

Roof Wind Zone	Ground Snow Load (psf)	Wind Speed (mph)												
		90	95	100	105	110	115	120	130	140	150	160	170	180
Zone 1'	0	118	118	118	118	118	118	118	118	118	118	118	118	115
	10	108	108	108	108	108	108	108	108	108	108	108	108	108
	20	88	88	88	88	88	88	88	88	88	88	88	88	88
	30	86	86	86	86	86	86	86	86	86	86	86	86	86
	40	76	76	76	76	76	76	76	76	76	76	76	76	76
	50	69	69	69	69	69	69	69	69	69	69	69	69	69
	60	63	63	63	63	63	63	63	63	63	63	63	63	63
	70	59	59	59	59	59	59	59	59	59	59	59	59	59
	80	55	55	55	55	55	55	55	55	55	55	55	55	55
	90	52	52	52	52	52	52	52	52	52	52	52	52	52
Zone 1	0	118	118	118	118	118	118	118	118	111	104	99	94	88
	10	108	108	108	108	108	108	108	108	108	104	99	94	88
	20	88	88	88	88	88	88	88	88	88	88	88	88	88
	30	86	86	86	86	86	86	86	86	86	86	86	86	86
	40	76	76	76	76	76	76	76	76	76	76	76	76	76
	50	69	69	69	69	69	69	69	69	69	69	69	69	69
	60	63	63	63	63	63	63	63	63	63	63	63	63	63
	70	59	59	59	59	59	59	59	59	59	59	59	59	59
	80	55	55	55	55	55	55	55	55	55	55	55	55	55
	90	52	52	52	52	52	52	52	52	52	52	52	52	52
Zone 2	0	118	118	118	118	118	116	111	104	97	92	85	78	72
	10	108	108	108	108	108	108	108	104	97	92	85	78	72
	20	88	88	88	88	88	88	88	88	88	88	85	78	72
	30	86	86	86	86	86	86	86	86	86	86	85	78	72
	40	76	76	76	76	76	76	76	76	76	76	76	76	72
	50	69	69	69	69	69	69	69	69	69	69	69	69	69
	60	63	63	63	63	63	63	63	63	63	63	63	63	63
	70	59	59	59	59	59	59	59	59	59	59	59	59	59
	80	55	55	55	55	55	55	55	55	55	55	55	55	55
	90	52	52	52	52	52	52	52	52	52	52	52	52	52
Zone 3	0	118	118	114	109	105	101	97	90	81	74	68	64	60
	10	108	108	108	108	105	101	97	90	81	74	68	64	60
	20	88	88	88	88	88	88	88	88	81	74	68	64	60
	30	86	86	86	86	86	86	86	86	81	74	68	64	60
	40	76	76	76	76	76	76	76	76	76	74	68	64	60
	50	69	69	69	69	69	69	69	69	69	69	68	64	60
	60	63	63	63	63	63	63	63	63	63	63	63	63	60
	70	59	59	59	59	59	59	59	59	59	59	59	59	59
	80	55	55	55	55	55	55	55	55	55	55	55	55	55
	90	52	52	52	52	52	52	52	52	52	52	52	52	52

Notes:

1. Tables are based on critical rail span for load combinations as specified in chapter 2 of the ASCE 7-16 and allowable design loads per the 2015 Aluminum Design Manual.
2. Panels are assumed to be in landscape orientation with a maximum width of 42"

Structural ENGINUITY INC
Ingenuity in Engineering

SUNMODO®

Max Rail Spans for SunModo SMR100 System

Table 97b

Mean Roof Height: h ≤ 15 ft
Roof Angle: 0 < θ ≤ 7 degrees
Exposure Category: B

Panel Orientation: Landscape
North/South Support γ_E = 1.5
Roof Type : Gable

Roof Wind Zone	Ground Snow Load (psf)	Wind Speed (mph)												
		90	95	100	105	110	115	120	130	140	150	160	170	180
Zone 1'	0	118	118	118	118	118	118	118	118	118	113	107	102	97
	10	108	108	108	108	108	108	108	108	108	108	107	102	97
	20	88	88	88	88	88	88	88	88	88	88	88	88	88
	30	86	86	86	86	86	86	86	86	86	86	86	86	86
	40	76	76	76	76	76	76	76	76	76	76	76	76	76
	50	69	69	69	69	69	69	69	69	69	69	69	69	69
	60	63	63	63	63	63	63	63	63	63	63	63	63	63
	70	59	59	59	59	59	59	59	59	59	59	59	59	59
	80	55	55	55	55	55	55	55	55	55	55	55	55	55
	90	52	52	52	52	52	52	52	52	52	52	52	52	52
Zone 1	0	118	118	118	118	115	110	106	99	93	86	79	73	68
	10	108	108	108	108	108	108	106	99	93	86	79	73	68
	20	88	88	88	88	88	88	88	88	88	86	79	73	68
	30	86	86	86	86	86	86	86	86	86	86	79	73	68
	40	76	76	76	76	76	76	76	76	76	76	76	73	68
	50	69	69	69	69	69	69	69	69	69	69	69	69	68
	60	63	63	63	63	63	63	63	63	63	63	63	63	63
	70	59	59	59	59	59	59	59	59	59	59	59	59	59
	80	55	55	55	55	55	55	55	55	55	55	55	55	55
	90	52	52	52	52	52	52	52	52	52	52	52	52	52
Zone 2	0	118	114	109	105	100	97	93	85	77	71	66	61	58
	10	108	108	108	105	100	97	93	85	77	71	66	61	58
	20	88	88	88	88	88	88	88	85	77	71	66	61	58
	30	86	86	86	86	86	86	86	85	77	71	66	61	58
	40	76	76	76	76	76	76	76	76	76	71	66	61	58
	50	69	69	69	69	69	69	69	69	69	69	66	61	58
	60	63	63	63	63	63	63	63	63	63	63	63	61	58
	70	59	59	59	59	59	59	59	59	59	59	59	59	58
	80	55	55	55	55	55	55	55	55	55	55	55	55	55
	90	52	52	52	52	52	52	52	52	52	52	52	52	52
Zone 3	0	104	100	95	91	86	81	76	69	63	59	55	52	49
	10	104	100	95	91	86	81	76	69	63	59	55	52	49
	20	88	88	88	88	86	81	76	69	63	59	55	52	49
	30	86	86	86	86	86	81	76	69	63	59	55	52	49
	40	76	76	76	76	76	76	76	69	63	59	55	52	49
	50	69	69	69	69	69	69	69	69	63	59	55	52	49
	60	63	63	63	63	63	63	63	63	63	59	55	52	49
	70	59	59	59	59	59	59	59	59	59	59	55	52	49
	80	55	55	55	55	55	55	55	55	55	55	55	52	49
	90	52	52	52	52	52	52	52	52	52	52	52	52	49

Notes:

1. Tables are based on critical rail span for load combinations as specified in chapter 2 of the ASCE 7-16 and allowable design loads per the 2015 Aluminum Design Manual.
2. Panels are assumed to be in landscape orientation with a maximum width of 42"

Structural ENGINUITY INC
Ingenuity in Engineering

SUNMODO®

Max Rail Spans for SunModo SMR100 System

Table 98a

Mean Roof Height: h ≤ 15 ft
Roof Angle: 0 < θ ≤ 7 degrees
Exposure Category: C

Panel Orientation: Landscape
North/South Support γ_E = 1
Roof Type : Gable

Roof Wind Zone	Ground Snow Load (psf)	Wind Speed (mph)												
		90	95	100	105	110	115	120	130	140	150	160	170	180
Zone 1'	0	118	118	118	118	118	118	118	118	118	113	107	102	97
	10	108	108	108	108	108	108	108	108	108	108	107	102	97
	20	88	88	88	88	88	88	88	88	88	88	88	88	88
	30	86	86	86	86	86	86	86	86	86	86	86	86	86
	40	76	76	76	76	76	76	76	76	76	76	76	76	76
	50	69	69	69	69	69	69	69	69	69	69	69	69	69
	60	63	63	63	63	63	63	63	63	63	63	63	63	63
	70	59	59	59	59	59	59	59	59	59	59	59	59	59
	80	55	55	55	55	55	55	55	55	55	55	55	55	55
	90	52	52	52	52	52	52	52	52	52	52	52	52	52
Zone 1	0	118	118	118	118	115	111	107	99	93	86	79	73	68
	10	108	108	108	108	108	108	107	99	93	86	79	73	68
	20	88	88	88	88	88	88	88	88	88	86	79	73	68
	30	86	86	86	86	86	86	86	86	86	86	79	73	68
	40	76	76	76	76	76	76	76	76	76	76	76	73	68
	50	69	69	69	69	69	69	69	69	69	69	69	69	68
	60	63	63	63	63	63	63	63	63	63	63	63	63	63
	70	59	59	59	59	59	59	59	59	59	59	59	59	59
	80	55	55	55	55	55	55	55	55	55	55	55	55	55
	90	52	52	52	52	52	52	52	52	52	52	52	52	52
Zone 2	0	118	115	109	105	101	97	93	85	77	71	66	62	58
	10	108	108	108	105	101	97	93	85	77	71	66	62	58
	20	88	88	88	88	88	88	88	85	77	71	66	62	58
	30	86	86	86	86	86	86	86	85	77	71	66	62	58
	40	76	76	76	76	76	76	76	76	76	71	66	62	58
	50	69	69	69	69	69	69	69	69	69	69	66	62	58
	60	63	63	63	63	63	63	63	63	63	63	63	62	58
	70	59	59	59	59	59	59	59	59	59	59	59	59	58
	80	55	55	55	55	55	55	55	55	55	55	55	55	55
	90	52	52	52	52	52	52	52	52	52	52	52	52	52
Zone 3	0	105	100	95	92	86	81	77	69	64	59	55	52	49
	10	105	100	95	92	86	81	77	69	64	59	55	52	49
	20	88	88	88	88	86	81	77	69	64	59	55	52	49
	30	86	86	86	86	86	81	77	69	64	59	55	52	49
	40	76	76	76	76	76	76	76	69	64	59	55	52	49
	50	69	69	69	69	69	69	69	69	64	59	55	52	49
	60	63	63	63	63	63	63	63	63	63	59	55	52	49
	70	59	59	59	59	59	59	59	59	59	59	55	52	49
	80	55	55	55	55	55	55	55	55	55	55	55	52	49
	90	52	52	52	52	52	52	52	52	52	52	52	52	49

Notes:

1. Tables are based on critical rail span for load combinations as specified in chapter 2 of the ASCE 7-16 and allowable design loads per the 2015 Aluminum Design Manual.
2. Panels are assumed to be in landscape orientation with a maximum width of 42"

Structural ENGINUITY INC
Ingenuity in Engineering

SUNMODO®

Max Rail Spans for SunModo SMR100 System

Table 98b

Mean Roof Height: h ≤ 15 ft
Roof Angle: 0 < θ ≤ 7 degrees
Exposure Category: C

Panel Orientation: Landscape
North/South Support γ_E = 1.5
Roof Type : Gable

Roof Wind Zone	Ground Snow Load (psf)	Wind Speed (mph)												
		90	95	100	105	110	115	120	130	140	150	160	170	180
Zone 1'	0	118	118	118	118	118	118	115	108	101	96	91	84	78
	10	108	108	108	108	108	108	108	108	101	96	91	84	78
	20	88	88	88	88	88	88	88	88	88	88	88	84	78
	30	86	86	86	86	86	86	86	86	86	86	86	84	78
	40	76	76	76	76	76	76	76	76	76	76	76	76	76
	50	69	69	69	69	69	69	69	69	69	69	69	69	69
	60	63	63	63	63	63	63	63	63	63	63	63	63	63
	70	59	59	59	59	59	59	59	59	59	59	59	59	59
	80	55	55	55	55	55	55	55	55	55	55	55	55	55
	90	52	52	52	52	52	52	52	52	52	52	52	52	52
Zone 1	0	115	110	105	100	96	93	89	80	73	67	62	58	55
	10	108	108	105	100	96	93	89	80	73	67	62	58	55
	20	88	88	88	88	88	88	88	80	73	67	62	58	55
	30	86	86	86	86	86	86	86	80	73	67	62	58	55
	40	76	76	76	76	76	76	76	76	73	67	62	58	55
	50	69	69	69	69	69	69	69	69	69	67	62	58	55
	60	63	63	63	63	63	63	63	63	63	63	62	58	55
	70	59	59	59	59	59	59	59	59	59	59	59	58	55
	80	55	55	55	55	55	55	55	55	55	55	55	55	55
	90	52	52	52	52	52	52	52	52	52	52	52	52	52
Zone 2	0	100	96	92	87	81	77	73	66	61	57	53	50	47
	10	100	96	92	87	81	77	73	66	61	57	53	50	47
	20	88	88	88	87	81	77	73	66	61	57	53	50	47
	30	86	86	86	86	81	77	73	66	61	57	53	50	47
	40	76	76	76	76	76	76	73	66	61	57	53	50	47
	50	69	69	69	69	69	69	69	66	61	57	53	50	47
	60	63	63	63	63	63	63	63	63	61	57	53	50	47
	70	59	59	59	59	59	59	59	59	59	57	53	50	47
	80	55	55	55	55	55	55	55	55	55	55	53	50	47
	90	52	52	52	52	52	52	52	52	52	52	52	50	47
Zone 3	0	86	80	75	70	66	63	60	56	51	48	45	42	40
	10	86	80	75	70	66	63	60	56	51	48	45	42	40
	20	86	80	75	70	66	63	60	56	51	48	45	42	40
	30	86	80	75	70	66	63	60	56	51	48	45	42	40
	40	76	76	75	70	66	63	60	56	51	48	45	42	40
	50	69	69	69	69	66	63	60	56	51	48	45	42	40
	60	63	63	63	63	63	63	60	56	51	48	45	42	40
	70	59	59	59	59	59	59	59	56	51	48	45	42	40
	80	55	55	55	55	55	55	55	55	51	48	45	42	40
	90	52	52	52	52	52	52	52	52	51	48	45	42	40

Notes:

1. Tables are based on critical rail span for load combinations as specified in chapter 2 of the ASCE 7-16 and allowable design loads per the 2015 Aluminum Design Manual.
2. Panels are assumed to be in landscape orientation with a maximum width of 42"

Structural ENGINUITY INC
Ingenuity in Engineering

SUNMODO®

Max Rail Spans for SunModo SMR100 System

Table 99a

Mean Roof Height: h ≤ 15 ft
Roof Angle: 0 < θ ≤ 7 degrees
Exposure Category: D

Panel Orientation: Landscape
North/South Support γ_E = 1
Roof Type : Gable

Roof Wind Zone	Ground Snow Load (psf)	Wind Speed (mph)												
		90	95	100	105	110	115	120	130	140	150	160	170	180
Zone 1'	0	118	118	118	118	118	118	118	118	111	104	99	94	89
	10	108	108	108	108	108	108	108	108	108	104	99	94	89
	20	88	88	88	88	88	88	88	88	88	88	88	87	86
	30	86	86	86	86	86	86	86	86	86	86	86	86	84
	40	76	76	76	76	76	76	76	76	76	76	76	76	76
	50	69	69	69	69	69	69	69	69	69	69	69	69	69
	60	63	63	63	63	63	63	63	63	63	63	63	63	63
	70	59	59	59	59	59	59	59	59	59	59	59	59	59
	80	55	55	55	55	55	55	55	55	55	55	55	55	55
	90	52	52	52	52	52	52	52	52	52	52	52	52	52
Zone 1	0	118	118	115	110	106	102	98	92	83	76	70	65	62
	10	108	108	108	108	106	102	98	92	83	76	70	65	62
	20	88	88	88	88	88	88	88	88	83	76	70	65	62
	30	86	86	86	86	86	86	86	86	83	76	70	65	62
	40	76	76	76	76	76	76	76	76	76	76	70	65	62
	50	69	69	69	69	69	69	69	69	69	69	69	65	62
	60	63	63	63	63	63	63	63	63	63	63	63	63	62
	70	59	59	59	59	59	59	59	59	59	59	59	59	59
	80	55	55	55	55	55	55	55	55	55	55	55	55	55
	90	52	52	52	52	52	52	52	52	52	52	52	52	52
Zone 2	0	110	105	101	96	93	88	84	75	68	64	59	56	53
	10	108	105	101	96	93	88	84	75	68	64	59	56	53
	20	88	88	88	88	88	88	84	75	68	64	59	56	53
	30	86	86	86	86	86	86	84	75	68	64	59	56	53
	40	76	76	76	76	76	76	76	75	68	64	59	56	53
	50	69	69	69	69	69	69	69	69	68	64	59	56	53
	60	63	63	63	63	63	63	63	63	63	63	59	56	53
	70	59	59	59	59	59	59	59	59	59	59	59	56	53
	80	55	55	55	55	55	55	55	55	55	55	55	55	53
	90	52	52	52	52	52	52	52	52	52	52	52	52	52
Zone 3	0	96	92	86	81	76	71	68	62	58	54	50	47	44
	10	96	92	86	81	76	71	68	62	58	54	50	47	44
	20	88	88	86	81	76	71	68	62	58	54	50	47	44
	30	86	86	86	81	76	71	68	62	58	54	50	47	44
	40	76	76	76	76	76	71	68	62	58	54	50	47	44
	50	69	69	69	69	69	69	68	62	58	54	50	47	44
	60	63	63	63	63	63	63	63	62	58	54	50	47	44
	70	59	59	59	59	59	59	59	59	58	54	50	47	44
	80	55	55	55	55	55	55	55	55	55	54	50	47	44
	90	52	52	52	52	52	52	52	52	52	52	50	47	44

Notes:

1. Tables are based on critical rail span for load combinations as specified in chapter 2 of the ASCE 7-16 and allowable design loads per the 2015 Aluminum Design Manual.
2. Panels are assumed to be in landscape orientation with a maximum width of 42"

Structural ENGINUITY INC
Ingenuity in Engineering

SUNMODO®

Max Rail Spans for SunModo SMR100 System

Table 99b

Mean Roof Height: h ≤ 15 ft
Roof Angle: 0 < θ ≤ 7 degrees
Exposure Category: D

Panel Orientation: Landscape
North/South Support γ_E = 1.5
Roof Type : Gable

Roof Wind Zone	Ground Snow Load (psf)	Wind Speed (mph)												
		90	95	100	105	110	115	120	130	140	150	160	170	180
Zone 1'	0	118	118	118	118	114	110	106	99	93	87	80	75	70
	10	108	108	108	108	108	108	106	99	93	87	80	75	70
	20	88	88	88	88	88	88	88	88	88	87	80	75	70
	30	86	86	86	86	86	86	86	86	86	86	80	75	70
	40	76	76	76	76	76	76	76	76	76	76	76	75	70
	50	69	69	69	69	69	69	69	69	69	69	69	69	69
	60	63	63	63	63	63	63	63	63	63	63	63	63	63
	70	59	59	59	59	59	59	59	59	59	59	59	59	59
	80	55	55	55	55	55	55	55	55	55	55	55	55	55
	90	52	52	52	52	52	52	52	52	52	52	52	52	52
Zone 1	0	106	101	96	92	88	83	78	70	65	60	56	53	50
	10	106	101	96	92	88	83	78	70	65	60	56	53	50
	20	88	88	88	88	88	83	78	70	65	60	56	53	50
	30	86	86	86	86	86	83	78	70	65	60	56	53	50
	40	76	76	76	76	76	76	76	70	65	60	56	53	50
	50	69	69	69	69	69	69	69	69	65	60	56	53	50
	60	63	63	63	63	63	63	63	63	63	60	56	53	50
	70	59	59	59	59	59	59	59	59	59	59	56	53	50
	80	55	55	55	55	55	55	55	55	55	55	55	53	50
	90	52	52	52	52	52	52	52	52	52	52	52	52	50
Zone 2	0	93	87	81	76	72	68	65	60	55	51	48	45	43
	10	93	87	81	76	72	68	65	60	55	51	48	45	43
	20	88	87	81	76	72	68	65	60	55	51	48	45	43
	30	86	86	81	76	72	68	65	60	55	51	48	45	43
	40	76	76	76	76	72	68	65	60	55	51	48	45	43
	50	69	69	69	69	69	68	65	60	55	51	48	45	43
	60	63	63	63	63	63	63	63	60	55	51	48	45	43
	70	59	59	59	59	59	59	59	59	55	51	48	45	43
	80	55	55	55	55	55	55	55	55	55	51	48	45	43
	90	52	52	52	52	52	52	52	52	52	51	48	45	43
Zone 3	0	76	70	66	63	60	57	55	50	47	43	41	38	36
	10	76	70	66	63	60	57	55	50	47	43	41	38	36
	20	76	70	66	63	60	57	55	50	47	43	41	38	36
	30	76	70	66	63	60	57	55	50	47	43	41	38	36
	40	76	70	66	63	60	57	55	50	47	43	41	38	36
	50	69	69	66	63	60	57	55	50	47	43	41	38	36
	60	63	63	63	63	60	57	55	50	47	43	41	38	36
	70	59	59	59	59	59	57	55	50	47	43	41	38	36
	80	55	55	55	55	55	55	55	50	47	43	41	38	36
	90	52	52	52	52	52	52	52	50	47	43	41	38	36

Notes:

1. Tables are based on critical rail span for load combinations as specified in chapter 2 of the ASCE 7-16 and allowable design loads per the 2015 Aluminum Design Manual.
2. Panels are assumed to be in landscape orientation with a maximum width of 42"

Structural ENGINUITY INC
Ingenuity in Engineering

SUNMODO®

Max Rail Spans for SunModo SMR100 System

Table 100a

Mean Roof Height: h ≤ 15 ft
Roof Angle: 7 < θ ≤ 20 degrees
Exposure Category: B

Panel Orientation: Landscape
North/South Support γ_E = 1
Roof Type : Gable

Roof Wind Zone	Ground Snow Load (psf)	Wind Speed (mph)												
		90	95	100	105	110	115	120	130	140	150	160	170	180
Zones 1 & 2e	0	118	118	118	118	118	118	115	108	101	96	91	85	79
	10	100	100	100	100	100	100	100	100	100	96	91	85	79
	20	79	79	79	79	79	79	79	79	79	79	79	79	79
	30	79	79	79	79	79	79	79	79	79	79	79	79	79
	40	70	70	70	70	70	70	70	70	70	70	70	70	70
	50	63	63	63	63	63	63	63	63	63	63	63	63	63
	60	58	58	58	58	58	58	58	58	58	58	58	58	58
	70	54	54	54	54	54	54	54	54	54	54	54	54	54
	80	51	51	51	51	51	51	51	51	51	51	51	51	51
	90	48	48	48	48	48	48	48	48	48	48	48	48	48
Zones 2n, 2r, & 3e	0	118	118	118	114	109	105	101	94	87	79	72	66	63
	10	100	100	100	100	100	100	100	94	87	79	72	66	63
	20	79	79	79	79	79	79	79	79	79	79	72	66	63
	30	79	79	79	79	79	79	79	79	79	79	72	66	63
	40	70	70	70	70	70	70	70	70	70	70	70	66	63
	50	63	63	63	63	63	63	63	63	63	63	63	63	63
	60	58	58	58	58	58	58	58	58	58	58	58	58	58
	70	54	54	54	54	54	54	54	54	54	54	54	54	54
	80	51	51	51	51	51	51	51	51	51	51	51	51	51
	90	48	48	48	48	48	48	48	48	48	48	48	48	48
Zone 3r	0	118	115	110	105	100	96	93	85	76	69	64	60	57
	10	100	100	100	100	100	96	93	85	76	69	64	60	57
	20	79	79	79	79	79	79	79	79	76	69	64	60	57
	30	79	79	79	79	79	79	79	79	76	69	64	60	57
	40	70	70	70	70	70	70	70	70	70	69	64	60	57
	50	63	63	63	63	63	63	63	63	63	63	63	60	57
	60	58	58	58	58	58	58	58	58	58	58	58	58	57
	70	54	54	54	54	54	54	54	54	54	54	54	54	54
	80	51	51	51	51	51	51	51	51	51	51	51	51	51
	90	48	48	48	48	48	48	48	48	48	48	48	48	48

Notes:

1. Tables are based on critical rail span for load combinations as specified in chapter 2 of the ASCE 7-16 and allowable design loads per the 2015 Aluminum Design Manual.
2. Panels are assumed to be in landscape orientation with a maximum width of 42"

Structural ENGINUITY INC
Ingenuity in Engineering

SUNMODO®

Max Rail Spans for SunModo SMR100 System

Table 100b

Mean Roof Height: h ≤ 15 ft
Roof Angle: 7 < θ ≤ 20 degrees
Exposure Category: B

Panel Orientation: Landscape
North/South Support γ_E = 1.5
Roof Type : Gable

Roof Wind Zone	Ground Snow Load (psf)	Wind Speed (mph)												
		90	95	100	105	110	115	120	130	140	150	160	170	180
Zones 1 & 2e	0	118	118	113	109	104	101	97	91	84	77	71	66	63
	10	100	100	100	100	100	100	97	91	84	77	71	66	63
	20	79	79	79	79	79	79	79	79	79	77	71	66	63
	30	79	79	79	79	79	79	79	79	79	77	71	66	63
	40	70	70	70	70	70	70	70	70	70	70	70	66	63
	50	63	63	63	63	63	63	63	63	63	63	63	63	63
	60	58	58	58	58	58	58	58	58	58	58	58	58	58
	70	54	54	54	54	54	54	54	54	54	54	54	54	54
	80	51	51	51	51	51	51	51	51	51	51	51	51	51
	90	48	48	48	48	48	48	48	48	48	48	48	48	48
Zones 2n, 2r, & 3e	0	109	103	99	95	91	86	81	72	66	61	57	54	51
	10	100	100	99	95	91	86	81	72	66	61	57	54	51
	20	79	79	79	79	79	79	79	72	66	61	57	54	51
	30	79	79	79	79	79	79	79	72	66	61	57	54	51
	40	70	70	70	70	70	70	70	70	66	61	57	54	51
	50	63	63	63	63	63	63	63	63	63	61	57	54	51
	60	58	58	58	58	58	58	58	58	58	58	57	54	51
	70	54	54	54	54	54	54	54	54	54	54	54	54	51
	80	51	51	51	51	51	51	51	51	51	51	51	51	51
	90	48	48	48	48	48	48	48	48	48	48	48	48	48
Zone 3r	0	100	95	91	86	81	76	71	65	60	56	52	49	46
	10	100	95	91	86	81	76	71	65	60	56	52	49	46
	20	79	79	79	79	79	76	71	65	60	56	52	49	46
	30	79	79	79	79	79	76	71	65	60	56	52	49	46
	40	70	70	70	70	70	70	70	65	60	56	52	49	46
	50	63	63	63	63	63	63	63	63	60	56	52	49	46
	60	58	58	58	58	58	58	58	58	58	56	52	49	46
	70	54	54	54	54	54	54	54	54	54	54	52	49	46
	80	51	51	51	51	51	51	51	51	51	51	51	49	46
	90	48	48	48	48	48	48	48	48	48	48	48	48	46

Notes:

1. Tables are based on critical rail span for load combinations as specified in chapter 2 of the ASCE 7-16 and allowable design loads per the 2015 Aluminum Design Manual.
2. Panels are assumed to be in landscape orientation with a maximum width of 42"

Structural ENGINUITY INC
Ingenuity in Engineering

SUNMODO®

Max Rail Spans for SunModo SMR100 System

Table 101a

Mean Roof Height: h ≤ 15 ft
Roof Angle: 7 < θ ≤ 20 degrees
Exposure Category: C

Panel Orientation: Landscape
North/South Support γ_E = 1
Roof Type : Gable

Roof Wind Zone	Ground Snow Load (psf)	Wind Speed (mph)												
		90	95	100	105	110	115	120	130	140	150	160	170	180
Zones 1 & 2e	0	118	118	113	109	105	101	97	91	84	77	72	67	63
	10	100	100	100	100	100	100	97	91	84	77	72	67	63
	20	79	79	79	79	79	79	79	79	79	77	72	67	63
	30	79	79	79	79	79	79	79	79	79	77	72	67	63
	40	70	70	70	70	70	70	70	70	70	70	70	67	63
	50	63	63	63	63	63	63	63	63	63	63	63	63	63
	60	58	58	58	58	58	58	58	58	58	58	58	58	58
	70	54	54	54	54	54	54	54	54	54	54	54	54	54
	80	51	51	51	51	51	51	51	51	51	51	51	51	51
	90	48	48	48	48	48	48	48	48	48	48	48	48	48
Zones 2n, 2r, & 3e	0	109	104	99	95	91	86	81	73	66	61	57	54	51
	10	100	100	99	95	91	86	81	73	66	61	57	54	51
	20	79	79	79	79	79	79	79	73	66	61	57	54	51
	30	79	79	79	79	79	79	79	73	66	61	57	54	51
	40	70	70	70	70	70	70	70	70	66	61	57	54	51
	50	63	63	63	63	63	63	63	63	63	61	57	54	51
	60	58	58	58	58	58	58	58	58	58	58	57	54	51
	70	54	54	54	54	54	54	54	54	54	54	54	54	51
	80	51	51	51	51	51	51	51	51	51	51	51	51	51
	90	48	48	48	48	48	48	48	48	48	48	48	48	48
Zone 3r	0	100	96	91	87	81	76	71	65	60	56	52	49	46
	10	100	96	91	87	81	76	71	65	60	56	52	49	46
	20	79	79	79	79	79	76	71	65	60	56	52	49	46
	30	79	79	79	79	79	76	71	65	60	56	52	49	46
	40	70	70	70	70	70	70	70	65	60	56	52	49	46
	50	63	63	63	63	63	63	63	63	60	56	52	49	46
	60	58	58	58	58	58	58	58	58	58	56	52	49	46
	70	54	54	54	54	54	54	54	54	54	54	52	49	46
	80	51	51	51	51	51	51	51	51	51	51	51	49	46
	90	48	48	48	48	48	48	48	48	48	48	48	48	46

Notes:

1. Tables are based on critical rail span for load combinations as specified in chapter 2 of the ASCE 7-16 and allowable design loads per the 2015 Aluminum Design Manual.
2. Panels are assumed to be in landscape orientation with a maximum width of 42"

Structural ENGINUITY INC
Ingenuity in Engineering

SUNMODO®

Max Rail Spans for SunModo SMR100 System

Table 101b

Mean Roof Height: h ≤ 15 ft
Roof Angle: 7 < θ ≤ 20 degrees
Exposure Category: C

Panel Orientation: Landscape
North/South Support γ_E = 1.5
Roof Type : Gable

Roof Wind Zone	Ground Snow Load (psf)	Wind Speed (mph)												
		90	95	100	105	110	115	120	130	140	150	160	170	180
Zones 1 & 2e	0	104	100	96	92	89	84	79	72	66	61	57	54	51
	10	100	100	96	92	89	84	79	72	66	61	57	54	51
	20	79	79	79	79	79	79	79	72	66	61	57	54	51
	30	79	79	79	79	79	79	79	72	66	61	57	54	51
	40	70	70	70	70	70	70	70	70	66	61	57	54	51
	50	63	63	63	63	63	63	63	63	63	61	57	54	51
	60	58	58	58	58	58	58	58	58	58	58	57	54	51
	70	54	54	54	54	54	54	54	54	54	54	54	54	51
	80	51	51	51	51	51	51	51	51	51	51	51	51	51
	90	48	48	48	48	48	48	48	48	48	48	48	48	48
Zones 2n, 2r, & 3e	0	91	85	79	74	69	66	63	58	53	50	46	44	41
	10	91	85	79	74	69	66	63	58	53	50	46	44	41
	20	79	79	79	74	69	66	63	58	53	50	46	44	41
	30	79	79	79	74	69	66	63	58	53	50	46	44	41
	40	70	70	70	70	69	66	63	58	53	50	46	44	41
	50	63	63	63	63	63	63	63	58	53	50	46	44	41
	60	58	58	58	58	58	58	58	58	53	50	46	44	41
	70	54	54	54	54	54	54	54	54	53	50	46	44	41
	80	51	51	51	51	51	51	51	51	51	50	46	44	41
	90	48	48	48	48	48	48	48	48	48	48	46	44	41
Zone 3r	0	81	75	69	66	62	60	57	52	49	45	42	40	37
	10	81	75	69	66	62	60	57	52	49	45	42	40	37
	20	79	75	69	66	62	60	57	52	49	45	42	40	37
	30	79	75	69	66	62	60	57	52	49	45	42	40	37
	40	70	70	69	66	62	60	57	52	49	45	42	40	37
	50	63	63	63	63	62	60	57	52	49	45	42	40	37
	60	58	58	58	58	58	58	57	52	49	45	42	40	37
	70	54	54	54	54	54	54	54	52	49	45	42	40	37
	80	51	51	51	51	51	51	51	51	49	45	42	40	37
	90	48	48	48	48	48	48	48	48	48	45	42	40	37

Notes:

1. Tables are based on critical rail span for load combinations as specified in chapter 2 of the ASCE 7-16 and allowable design loads per the 2015 Aluminum Design Manual.
2. Panels are assumed to be in landscape orientation with a maximum width of 42"

Structural ENGINUITY INC
Ingenuity in Engineering

SUNMODO®

Max Rail Spans for SunModo SMR100 System

Table 102a

Mean Roof Height: h ≤ 15 ft
Roof Angle: 7 < θ ≤ 20 degrees
Exposure Category: D

Panel Orientation: Landscape
North/South Support γ_E = 1
Roof Type : Gable

Roof Wind Zone	Ground Snow Load (psf)	Wind Speed (mph)												
		90	95	100	105	110	115	120	130	140	150	160	170	180
Zones 1 & 2e	0	114	109	105	100	97	93	90	82	75	69	64	60	57
	10	100	100	100	100	97	93	90	82	75	69	64	60	57
	20	79	79	79	79	79	79	79	79	75	69	64	60	57
	30	79	79	79	79	79	79	79	79	75	69	64	60	57
	40	70	70	70	70	70	70	70	70	70	69	64	60	57
	50	63	63	63	63	63	63	63	63	63	63	63	60	57
	60	58	58	58	58	58	58	58	58	58	58	58	58	57
	70	54	54	54	54	54	54	54	54	54	54	54	54	54
	80	51	51	51	51	51	51	51	51	51	51	51	51	51
	90	48	48	48	48	48	48	48	48	48	48	48	48	48
Zones 2n, 2r, & 3e	0	100	95	91	86	80	75	71	65	60	56	52	49	46
	10	100	95	91	86	80	75	71	65	60	56	52	49	46
	20	79	79	79	79	79	75	71	65	60	56	52	49	46
	30	79	79	79	79	79	75	71	65	60	56	52	49	46
	40	70	70	70	70	70	70	70	65	60	56	52	49	46
	50	63	63	63	63	63	63	63	63	60	56	52	49	46
	60	58	58	58	58	58	58	58	58	58	56	52	49	46
	70	54	54	54	54	54	54	54	54	54	54	52	49	46
	80	51	51	51	51	51	51	51	51	51	51	51	49	46
	90	48	48	48	48	48	48	48	48	48	48	48	48	46
Zone 3r	0	92	87	81	75	71	67	64	59	54	50	47	44	42
	10	92	87	81	75	71	67	64	59	54	50	47	44	42
	20	79	79	79	75	71	67	64	59	54	50	47	44	42
	30	79	79	79	75	71	67	64	59	54	50	47	44	42
	40	70	70	70	70	70	67	64	59	54	50	47	44	42
	50	63	63	63	63	63	63	63	59	54	50	47	44	42
	60	58	58	58	58	58	58	58	58	54	50	47	44	42
	70	54	54	54	54	54	54	54	54	54	50	47	44	42
	80	51	51	51	51	51	51	51	51	51	50	47	44	42
	90	48	48	48	48	48	48	48	48	48	48	47	44	42

Notes:

1. Tables are based on critical rail span for load combinations as specified in chapter 2 of the ASCE 7-16 and allowable design loads per the 2015 Aluminum Design Manual.
2. Panels are assumed to be in landscape orientation with a maximum width of 42"

Structural ENGINUITY INC
Ingenuity in Engineering

SUNMODO®

Max Rail Spans for SunModo SMR100 System

Table 102b

Mean Roof Height: h ≤ 15 ft
Roof Angle: 7 < θ ≤ 20 degrees
Exposure Category: D

Panel Orientation: Landscape
North/South Support γ_E = 1.5
Roof Type : Gable

Roof Wind Zone	Ground Snow Load (psf)	Wind Speed (mph)												
		90	95	100	105	110	115	120	130	140	150	160	170	180
Zones 1 & 2e	0	97	92	89	83	79	74	71	65	60	56	52	49	46
	10	97	92	89	83	79	74	71	65	60	56	52	49	46
	20	79	79	79	79	79	74	71	65	60	56	52	49	46
	30	79	79	79	79	79	74	71	65	60	56	52	49	46
	40	70	70	70	70	70	70	70	65	60	56	52	49	46
	50	63	63	63	63	63	63	63	63	60	56	52	49	46
	60	58	58	58	58	58	58	58	58	58	56	52	49	46
	70	54	54	54	54	54	54	54	54	54	54	52	49	46
	80	51	51	51	51	51	51	51	51	51	51	51	49	46
	90	48	48	48	48	48	48	48	48	48	48	48	48	46
Zones 2n, 2r, & 3e	0	80	74	69	65	62	59	57	52	48	45	42	39	37
	10	80	74	69	65	62	59	57	52	48	45	42	39	37
	20	79	74	69	65	62	59	57	52	48	45	42	39	37
	30	79	74	69	65	62	59	57	52	48	45	42	39	37
	40	70	70	69	65	62	59	57	52	48	45	42	39	37
	50	63	63	63	63	62	59	57	52	48	45	42	39	37
	60	58	58	58	58	58	58	57	52	48	45	42	39	37
	70	54	54	54	54	54	54	54	52	48	45	42	39	37
	80	51	51	51	51	51	51	51	51	48	45	42	39	37
	90	48	48	48	48	48	48	48	48	48	45	42	39	37
Zone 3r	0	70	66	62	59	56	54	52	47	44	41	38	36	34
	10	70	66	62	59	56	54	52	47	44	41	38	36	34
	20	70	66	62	59	56	54	52	47	44	41	38	36	34
	30	70	66	62	59	56	54	52	47	44	41	38	36	34
	40	70	66	62	59	56	54	52	47	44	41	38	36	34
	50	63	63	62	59	56	54	52	47	44	41	38	36	34
	60	58	58	58	58	56	54	52	47	44	41	38	36	34
	70	54	54	54	54	54	54	52	47	44	41	38	36	34
	80	51	51	51	51	51	51	51	47	44	41	38	36	34
	90	48	48	48	48	48	48	48	47	44	41	38	36	34

Notes:

1. Tables are based on critical rail span for load combinations as specified in chapter 2 of the ASCE 7-16 and allowable design loads per the 2015 Aluminum Design Manual.
2. Panels are assumed to be in landscape orientation with a maximum width of 42"

Structural ENGINUITY INC
Ingenuity in Engineering

SUNMODO®

Max Rail Spans for SunModo SMR100 System

Table 103a

Mean Roof Height: h ≤ 15 ft
Roof Angle: 20 < θ ≤ 27 degrees
Exposure Category: B

Panel Orientation: Landscape
North/South Support γ_E = 1
Roof Type : Gable

Roof Wind Zone	Ground Snow Load (psf)	Wind Speed (mph)												
		90	95	100	105	110	115	120	130	140	150	160	170	180
Zones 1 & 2e	0	118	118	118	118	118	118	118	118	114	107	102	97	93
	10	107	107	107	107	107	107	107	107	107	107	102	97	93
	20	92	92	92	92	92	92	92	92	92	92	92	90	89
	30	79	79	79	79	79	79	79	79	79	79	79	79	79
	40	70	70	70	70	70	70	70	70	70	70	70	70	70
	50	63	63	63	63	63	63	63	63	63	63	63	63	63
	60	58	58	58	58	58	58	58	58	58	58	58	58	58
	70	54	54	54	54	54	54	54	54	54	54	54	54	54
	80	51	51	51	51	51	51	51	51	51	51	51	51	51
	90	48	48	48	48	48	48	48	48	48	48	48	48	48
Zones 2n, 2r, & 3e	0	118	118	118	118	118	113	109	101	95	89	83	76	70
	10	107	107	107	107	107	107	107	101	95	89	83	76	70
	20	92	92	92	92	92	92	92	92	92	89	83	76	70
	30	79	79	79	79	79	79	79	79	79	79	79	76	70
	40	70	70	70	70	70	70	70	70	70	70	70	70	70
	50	63	63	63	63	63	63	63	63	63	63	63	63	63
	60	58	58	58	58	58	58	58	58	58	58	58	58	58
	70	54	54	54	54	54	54	54	54	54	54	54	54	54
	80	51	51	51	51	51	51	51	51	51	51	51	51	51
	90	48	48	48	48	48	48	48	48	48	48	48	48	48
Zone 3r	0	118	118	118	116	110	106	102	95	89	81	74	67	63
	10	107	107	107	107	107	106	102	95	89	81	74	67	63
	20	92	92	92	92	92	92	92	92	89	81	74	67	63
	30	79	79	79	79	79	79	79	79	79	79	74	67	63
	40	70	70	70	70	70	70	70	70	70	70	70	67	63
	50	63	63	63	63	63	63	63	63	63	63	63	63	63
	60	58	58	58	58	58	58	58	58	58	58	58	58	58
	70	54	54	54	54	54	54	54	54	54	54	54	54	54
	80	51	51	51	51	51	51	51	51	51	51	51	51	51
	90	48	48	48	48	48	48	48	48	48	48	48	48	48

Notes:

1. Tables are based on critical rail span for load combinations as specified in chapter 2 of the ASCE 7-16 and allowable design loads per the 2015 Aluminum Design Manual.
2. Panels are assumed to be in landscape orientation with a maximum width of 42"

Structural ENGINUITY INC
Ingenuity in Engineering

SUNMODO®

Max Rail Spans for SunModo SMR100 System

Table 103b

Mean Roof Height: h ≤ 15 ft
Roof Angle: 20 < θ ≤ 27 degrees
Exposure Category: B

Panel Orientation: Landscape
North/South Support γ_E = 1.5
Roof Type : Gable

Roof Wind Zone	Ground Snow Load (psf)	Wind Speed (mph)												
		90	95	100	105	110	115	120	130	140	150	160	170	180
Zones 1 & 2e	0	118	118	118	118	118	113	109	102	96	91	86	80	74
	10	107	107	107	107	107	107	107	102	96	91	86	80	74
	20	92	92	92	92	92	92	92	92	92	91	86	80	74
	30	79	79	79	79	79	79	79	79	79	79	79	79	74
	40	70	70	70	70	70	70	70	70	70	70	70	70	70
	50	63	63	63	63	63	63	63	63	63	63	63	63	63
	60	58	58	58	58	58	58	58	58	58	58	58	58	58
	70	54	54	54	54	54	54	54	54	54	54	54	54	54
	80	51	51	51	51	51	51	51	51	51	51	51	51	51
	90	48	48	48	48	48	48	48	48	48	48	48	48	48
Zones 2n, 2r, & 3e	0	118	112	107	102	98	94	91	83	75	68	63	59	56
	10	107	107	107	102	98	94	91	83	75	68	63	59	56
	20	92	92	92	92	92	92	91	83	75	68	63	59	56
	30	79	79	79	79	79	79	79	79	75	68	63	59	56
	40	70	70	70	70	70	70	70	70	70	68	63	59	56
	50	63	63	63	63	63	63	63	63	63	63	63	59	56
	60	58	58	58	58	58	58	58	58	58	58	58	58	56
	70	54	54	54	54	54	54	54	54	54	54	54	54	54
	80	51	51	51	51	51	51	51	51	51	51	51	51	51
	90	48	48	48	48	48	48	48	48	48	48	48	48	48
Zone 3r	0	110	105	100	96	92	88	84	74	67	61	57	53	49
	10	107	105	100	96	92	88	84	74	67	61	57	53	49
	20	92	92	92	92	92	88	84	74	67	61	57	53	49
	30	79	79	79	79	79	79	79	74	67	61	57	53	49
	40	70	70	70	70	70	70	70	70	67	61	57	53	49
	50	63	63	63	63	63	63	63	63	63	61	57	53	49
	60	58	58	58	58	58	58	58	58	58	58	57	53	49
	70	54	54	54	54	54	54	54	54	54	54	54	53	49
	80	51	51	51	51	51	51	51	51	51	51	51	51	49
	90	48	48	48	48	48	48	48	48	48	48	48	48	48

Notes:

1. Tables are based on critical rail span for load combinations as specified in chapter 2 of the ASCE 7-16 and allowable design loads per the 2015 Aluminum Design Manual.
2. Panels are assumed to be in landscape orientation with a maximum width of 42"

Structural ENGINUITY INC
Ingenuity in Engineering

SUNMODO®

Max Rail Spans for SunModo SMR100 System

Table 104a

Mean Roof Height: h ≤ 15 ft
Roof Angle: 20 < θ ≤ 27 degrees
Exposure Category: C

Panel Orientation: Landscape
North/South Support γ_E = 1
Roof Type : Gable

Roof Wind Zone	Ground Snow Load (psf)	Wind Speed (mph)												
		90	95	100	105	110	115	120	130	140	150	160	170	180
Zones 1 & 2e	0	118	118	118	118	118	113	109	102	96	91	87	80	75
	10	107	107	107	107	107	107	107	102	96	91	87	80	75
	20	92	92	92	92	92	92	92	92	90	89	87	80	75
	30	79	79	79	79	79	79	79	79	79	78	77	76	75
	40	70	70	70	70	70	70	70	70	70	70	70	69	68
	50	63	63	63	63	63	63	63	63	63	63	63	63	63
	60	58	58	58	58	58	58	58	58	58	58	58	58	58
	70	54	54	54	54	54	54	54	54	54	54	54	54	54
	80	51	51	51	51	51	51	51	51	51	51	51	51	51
	90	48	48	48	48	48	48	48	48	48	48	48	48	48
Zones 2n, 2r, & 3e	0	118	112	107	102	98	94	91	84	75	68	64	60	56
	10	107	107	107	102	98	94	91	84	75	68	64	60	56
	20	92	92	92	92	92	92	91	84	75	68	64	60	56
	30	79	79	79	79	79	79	79	79	75	68	64	60	56
	40	70	70	70	70	70	70	70	70	70	68	64	60	56
	50	63	63	63	63	63	63	63	63	63	63	63	60	56
	60	58	58	58	58	58	58	58	58	58	58	58	58	56
	70	54	54	54	54	54	54	54	54	54	54	54	54	54
	80	51	51	51	51	51	51	51	51	51	51	51	51	51
	90	48	48	48	48	48	48	48	48	48	48	48	48	48
Zone 3r	0	111	105	100	96	92	88	84	74	67	62	57	53	49
	10	107	105	100	96	92	88	84	74	67	62	57	53	49
	20	92	92	92	92	92	88	84	74	67	62	57	53	49
	30	79	79	79	79	79	79	79	74	67	62	57	53	49
	40	70	70	70	70	70	70	70	70	67	62	57	53	49
	50	63	63	63	63	63	63	63	63	63	62	57	53	49
	60	58	58	58	58	58	58	58	58	58	58	57	53	49
	70	54	54	54	54	54	54	54	54	54	54	54	53	49
	80	51	51	51	51	51	51	51	51	51	51	51	51	49
	90	48	48	48	48	48	48	48	48	48	48	48	48	48

Notes:

1. Tables are based on critical rail span for load combinations as specified in chapter 2 of the ASCE 7-16 and allowable design loads per the 2015 Aluminum Design Manual.
2. Panels are assumed to be in landscape orientation with a maximum width of 42"

Structural ENGINUITY INC
Ingenuity in Engineering

SUNMODO®

Max Rail Spans for SunModo SMR100 System

Table 104b

Mean Roof Height: h ≤ 15 ft
Roof Angle: 20 < θ ≤ 27 degrees
Exposure Category: C

Panel Orientation: Landscape
North/South Support γ_E = 1.5
Roof Type : Gable

Roof Wind Zone	Ground Snow Load (psf)	Wind Speed (mph)												
		90	95	100	105	110	115	120	130	140	150	160	170	180
Zones 1 & 2e	0	118	112	108	103	99	96	93	87	79	73	67	63	59
	10	107	107	107	103	99	96	93	87	79	73	67	63	59
	20	92	92	92	92	92	92	92	87	79	73	67	63	59
	30	79	79	79	79	79	79	79	79	79	73	67	63	59
	40	70	70	70	70	70	70	70	70	70	70	67	63	59
	50	63	63	63	63	63	63	63	63	63	63	63	63	59
	60	58	58	58	58	58	58	58	58	58	58	58	58	58
	70	54	54	54	54	54	54	54	54	54	54	54	54	54
	80	51	51	51	51	51	51	51	51	51	51	51	51	51
	90	48	48	48	48	48	48	48	48	48	48	48	48	48
Zones 2n, 2r, & 3e	0	98	93	89	85	79	74	70	64	59	55	51	48	45
	10	98	93	89	85	79	74	70	64	59	55	51	48	45
	20	92	92	89	85	79	74	70	64	59	55	51	48	45
	30	79	79	79	79	79	74	70	64	59	55	51	48	45
	40	70	70	70	70	70	70	70	64	59	55	51	48	45
	50	63	63	63	63	63	63	63	63	59	55	51	48	45
	60	58	58	58	58	58	58	58	58	58	55	51	48	45
	70	54	54	54	54	54	54	54	54	54	54	51	48	45
	80	51	51	51	51	51	51	51	51	51	51	51	48	45
	90	48	48	48	48	48	48	48	48	48	48	48	48	45
Zone 3r	0	92	88	81	76	71	67	63	57	52	48	45	42	39
	10	92	88	81	76	71	67	63	57	52	48	45	42	39
	20	92	88	81	76	71	67	63	57	52	48	45	42	39
	30	79	79	79	76	71	67	63	57	52	48	45	42	39
	40	70	70	70	70	70	67	63	57	52	48	45	42	39
	50	63	63	63	63	63	63	63	57	52	48	45	42	39
	60	58	58	58	58	58	58	58	57	52	48	45	42	39
	70	54	54	54	54	54	54	54	54	52	48	45	42	39
	80	51	51	51	51	51	51	51	51	51	48	45	42	39
	90	48	48	48	48	48	48	48	48	48	48	45	42	39

Notes:

1. Tables are based on critical rail span for load combinations as specified in chapter 2 of the ASCE 7-16 and allowable design loads per the 2015 Aluminum Design Manual.
2. Panels are assumed to be in landscape orientation with a maximum width of 42"

Structural ENGINUITY INC
Ingenuity in Engineering

SUNMODO®

Max Rail Spans for SunModo SMR100 System

Table 105a

Mean Roof Height: h ≤ 15 ft
Roof Angle: 20 < θ ≤ 27 degrees
Exposure Category: D

Panel Orientation: Landscape
North/South Support γ_E = 1
Roof Type : Gable

Roof Wind Zone	Ground Snow Load (psf)	Wind Speed (mph)												
		90	95	100	105	110	115	120	130	140	150	160	170	180
Zones 1 & 2e	0	118	118	118	113	109	105	101	95	89	83	77	71	66
	10	107	107	107	107	107	105	101	95	89	83	77	71	66
	20	92	92	92	92	92	92	91	90	88	83	77	71	66
	30	79	79	79	79	79	79	79	79	78	77	75	71	66
	40	70	70	70	70	70	70	70	70	70	70	69	68	66
	50	63	63	63	63	63	63	63	63	63	63	63	63	62
	60	58	58	58	58	58	58	58	58	58	58	58	58	58
	70	54	54	54	54	54	54	54	54	54	54	54	54	54
	80	51	51	51	51	51	51	51	51	51	51	51	51	51
	90	48	48	48	48	48	48	48	48	48	48	48	48	48
Zones 2n, 2r, & 3e	0	108	103	98	94	90	87	82	73	66	61	57	54	51
	10	107	103	98	94	90	87	82	73	66	61	57	54	51
	20	92	92	92	92	90	87	82	73	66	61	57	54	51
	30	79	79	79	79	79	79	79	73	66	61	57	54	51
	40	70	70	70	70	70	70	70	70	66	61	57	54	51
	50	63	63	63	63	63	63	63	63	63	61	57	54	51
	60	58	58	58	58	58	58	58	58	58	58	57	54	51
	70	54	54	54	54	54	54	54	54	54	54	54	54	51
	80	51	51	51	51	51	51	51	51	51	51	51	51	51
	90	48	48	48	48	48	48	48	48	48	48	48	48	48
Zone 3r	0	101	96	92	88	83	77	73	65	60	55	51	47	44
	10	101	96	92	88	83	77	73	65	60	55	51	47	44
	20	92	92	92	88	83	77	73	65	60	55	51	47	44
	30	79	79	79	79	79	77	73	65	60	55	51	47	44
	40	70	70	70	70	70	70	70	65	60	55	51	47	44
	50	63	63	63	63	63	63	63	63	60	55	51	47	44
	60	58	58	58	58	58	58	58	58	58	55	51	47	44
	70	54	54	54	54	54	54	54	54	54	54	51	47	44
	80	51	51	51	51	51	51	51	51	51	51	51	47	44
	90	48	48	48	48	48	48	48	48	48	48	48	47	44

Notes:

1. Tables are based on critical rail span for load combinations as specified in chapter 2 of the ASCE 7-16 and allowable design loads per the 2015 Aluminum Design Manual.
2. Panels are assumed to be in landscape orientation with a maximum width of 42"

Structural ENGINUITY INC
Ingenuity in Engineering

SUNMODO®

Max Rail Spans for SunModo SMR100 System

Table 105b

Mean Roof Height: h ≤ 15 ft
Roof Angle: 20 < θ ≤ 27 degrees
Exposure Category: D

Panel Orientation: Landscape
North/South Support γ_E = 1.5
Roof Type : Gable

Roof Wind Zone	Ground Snow Load (psf)	Wind Speed (mph)												
		90	95	100	105	110	115	120	130	140	150	160	170	180
Zones 1 & 2e	0	108	104	99	96	92	89	85	77	70	65	61	57	54
	10	107	104	99	96	92	89	85	77	70	65	61	57	54
	20	92	92	92	92	92	89	85	77	70	65	61	57	54
	30	79	79	79	79	79	79	79	77	70	65	61	57	54
	40	70	70	70	70	70	70	70	70	70	65	61	57	54
	50	63	63	63	63	63	63	63	63	63	63	61	57	54
	60	58	58	58	58	58	58	58	58	58	58	58	57	54
	70	54	54	54	54	54	54	54	54	54	54	54	54	54
	80	51	51	51	51	51	51	51	51	51	51	51	51	51
	90	48	48	48	48	48	48	48	48	48	48	48	48	48
Zones 2n, 2r, & 3e	0	90	85	79	74	69	66	63	58	53	50	46	43	41
	10	90	85	79	74	69	66	63	58	53	50	46	43	41
	20	90	85	79	74	69	66	63	58	53	50	46	43	41
	30	79	79	79	74	69	66	63	58	53	50	46	43	41
	40	70	70	70	70	69	66	63	58	53	50	46	43	41
	50	63	63	63	63	63	63	63	58	53	50	46	43	41
	60	58	58	58	58	58	58	58	58	53	50	46	43	41
	70	54	54	54	54	54	54	54	54	53	50	46	43	41
	80	51	51	51	51	51	51	51	51	51	50	46	43	41
	90	48	48	48	48	48	48	48	48	48	48	46	43	41
Zone 3r	0	83	76	71	66	62	59	56	51	47	43	40	37	35
	10	83	76	71	66	62	59	56	51	47	43	40	37	35
	20	83	76	71	66	62	59	56	51	47	43	40	37	35
	30	79	76	71	66	62	59	56	51	47	43	40	37	35
	40	70	70	70	66	62	59	56	51	47	43	40	37	35
	50	63	63	63	63	62	59	56	51	47	43	40	37	35
	60	58	58	58	58	58	58	56	51	47	43	40	37	35
	70	54	54	54	54	54	54	54	51	47	43	40	37	35
	80	51	51	51	51	51	51	51	51	47	43	40	37	35
	90	48	48	48	48	48	48	48	48	47	43	40	37	35

Notes:

1. Tables are based on critical rail span for load combinations as specified in chapter 2 of the ASCE 7-16 and allowable design loads per the 2015 Aluminum Design Manual.
2. Panels are assumed to be in landscape orientation with a maximum width of 42"

Structural ENGINUITY INC
Ingenuity in Engineering

SUNMODO®

Max Rail Spans for SunModo SMR100 System

Table 106a

Mean Roof Height: h ≤ 15 ft
Roof Angle: 27 < θ ≤ 45 degrees
Exposure Category: B

Panel Orientation: Landscape
North/South Support γ_E = 1
Roof Type : Gable

Roof Wind Zone	Ground Snow Load (psf)	Wind Speed (mph)												
		90	95	100	105	110	115	120	130	140	150	160	170	180
Zones 1, 2e, & 2r	0	118	118	118	118	118	118	118	118	110	103	97	92	88
	10	107	107	107	107	107	107	107	107	104	102	97	92	88
	20	93	93	93	93	93	93	93	92	90	88	86	84	82
	30	81	81	81	81	81	81	81	81	80	79	78	76	75
	40	72	72	72	72	72	72	72	72	72	72	71	70	69
	50	66	66	66	66	66	66	66	66	66	66	66	65	64
	60	61	61	61	61	61	61	61	61	61	61	61	61	61
	70	57	57	57	57	57	57	57	57	57	57	57	57	57
	80	53	53	53	53	53	53	53	53	53	53	53	53	53
	90	51	51	51	51	51	51	51	51	51	51	51	51	51
Zones 2n & 3r	0	118	118	118	118	118	118	118	110	103	97	92	87	82
	10	107	107	107	107	107	107	107	107	103	97	92	87	82
	20	93	93	93	93	93	93	93	92	90	88	86	84	82
	30	81	81	81	81	81	81	81	81	80	79	78	76	75
	40	72	72	72	72	72	72	72	72	72	72	71	70	69
	50	66	66	66	66	66	66	66	66	66	66	66	65	64
	60	61	61	61	61	61	61	61	61	61	61	61	61	61
	70	57	57	57	57	57	57	57	57	57	57	57	57	57
	80	53	53	53	53	53	53	53	53	53	53	53	53	53
	90	51	51	51	51	51	51	51	51	51	51	51	51	51
Zone 3e	0	118	118	118	118	116	111	107	100	94	89	83	76	70
	10	107	107	107	107	107	107	107	100	94	89	83	76	70
	20	93	93	93	93	93	93	93	92	90	88	83	76	70
	30	81	81	81	81	81	81	81	81	80	79	78	76	70
	40	72	72	72	72	72	72	72	72	72	72	71	70	69
	50	66	66	66	66	66	66	66	66	66	66	66	65	64
	60	61	61	61	61	61	61	61	61	61	61	61	61	61
	70	57	57	57	57	57	57	57	57	57	57	57	57	57
	80	53	53	53	53	53	53	53	53	53	53	53	53	53
	90	51	51	51	51	51	51	51	51	51	51	51	51	51

Notes:

1. Tables are based on critical rail span for load combinations as specified in chapter 2 of the ASCE 7-16 and allowable design loads per the 2015 Aluminum Design Manual.
2. Panels are assumed to be in landscape orientation with a maximum width of 42"

Structural ENGINUITY INC
Ingenuity in Engineering

SUNMODO®

Max Rail Spans for SunModo SMR100 System

Table 106b

Mean Roof Height: h ≤ 15 ft
Roof Angle: 27 < θ ≤ 45 degrees
Exposure Category: B

Panel Orientation: Landscape
North/South Support γ_E = 1.5
Roof Type : Gable

Roof Wind Zone	Ground Snow Load (psf)	Wind Speed (mph)												
		90	95	100	105	110	115	120	130	140	150	160	170	180
Zones 1, 2e, & 2r	0	118	118	118	118	114	109	105	98	92	86	79	72	67
	10	107	107	107	107	107	107	105	98	92	86	79	72	67
	20	93	93	93	93	93	93	93	92	90	86	79	72	67
	30	81	81	81	81	81	81	81	81	80	79	78	72	67
	40	72	72	72	72	72	72	72	72	72	72	71	70	67
	50	66	66	66	66	66	66	66	66	66	66	66	65	64
	60	61	61	61	61	61	61	61	61	61	61	61	61	61
	70	57	57	57	57	57	57	57	57	57	57	57	57	57
	80	53	53	53	53	53	53	53	53	53	53	53	53	53
	90	51	51	51	51	51	51	51	51	51	51	51	51	51
Zones 2n & 3r	0	118	118	116	111	106	102	99	92	87	80	73	67	63
	10	107	107	107	107	106	102	99	92	87	80	73	67	63
	20	93	93	93	93	93	93	93	92	87	80	73	67	63
	30	81	81	81	81	81	81	81	81	80	79	73	67	63
	40	72	72	72	72	72	72	72	72	72	72	71	67	63
	50	66	66	66	66	66	66	66	66	66	66	66	65	63
	60	61	61	61	61	61	61	61	61	61	61	61	61	61
	70	57	57	57	57	57	57	57	57	57	57	57	57	57
	80	53	53	53	53	53	53	53	53	53	53	53	53	53
	90	51	51	51	51	51	51	51	51	51	51	51	51	51
Zone 3e	0	116	110	105	101	97	93	90	84	75	68	63	59	55
	10	107	107	105	101	97	93	90	84	75	68	63	59	55
	20	93	93	93	93	93	93	90	84	75	68	63	59	55
	30	81	81	81	81	81	81	81	81	75	68	63	59	55
	40	72	72	72	72	72	72	72	72	72	68	63	59	55
	50	66	66	66	66	66	66	66	66	66	66	63	59	55
	60	61	61	61	61	61	61	61	61	61	61	61	59	55
	70	57	57	57	57	57	57	57	57	57	57	57	57	55
	80	53	53	53	53	53	53	53	53	53	53	53	53	53
	90	51	51	51	51	51	51	51	51	51	51	51	51	51

Notes:

1. Tables are based on critical rail span for load combinations as specified in chapter 2 of the ASCE 7-16 and allowable design loads per the 2015 Aluminum Design Manual.
2. Panels are assumed to be in landscape orientation with a maximum width of 42"

Structural ENGINUITY INC
Ingenuity in Engineering

SUNMODO®

Max Rail Spans for SunModo SMR100 System

Table 107a

Mean Roof Height: h ≤ 15 ft
Roof Angle: 27 < θ ≤ 45 degrees
Exposure Category: C

Panel Orientation: Landscape
North/South Support γ_E = 1
Roof Type : Gable

Roof Wind Zone	Ground Snow Load (psf)	Wind Speed (mph)												
		90	95	100	105	110	115	120	130	140	150	160	170	180
Zones 1, 2e, & 2r	0	118	118	118	118	114	109	105	98	92	86	79	72	67
	10	107	107	107	107	106	104	103	98	92	86	79	72	67
	20	93	93	93	92	91	90	89	86	84	82	79	72	67
	30	81	81	81	81	81	80	79	78	76	74	72	71	67
	40	72	72	72	72	72	72	72	71	70	68	67	66	64
	50	66	66	66	66	66	66	66	66	65	64	63	62	61
	60	61	61	61	61	61	61	61	61	61	60	60	59	58
	70	57	57	57	57	57	57	57	57	57	57	57	56	55
	80	53	53	53	53	53	53	53	53	53	53	53	53	53
	90	51	51	51	51	51	51	51	51	51	51	51	51	51
Zones 2n & 3r	0	118	118	116	111	107	103	99	93	87	80	73	67	63
	10	107	107	107	107	106	103	99	93	87	80	73	67	63
	20	93	93	93	92	91	90	89	86	84	80	73	67	63
	30	81	81	81	81	81	80	79	78	76	74	72	67	63
	40	72	72	72	72	72	72	72	71	70	68	67	66	63
	50	66	66	66	66	66	66	66	66	65	64	63	62	61
	60	61	61	61	61	61	61	61	61	61	60	60	59	58
	70	57	57	57	57	57	57	57	57	57	57	57	56	55
	80	53	53	53	53	53	53	53	53	53	53	53	53	53
	90	51	51	51	51	51	51	51	51	51	51	51	51	51
Zone 3e	0	116	110	106	101	97	94	90	84	75	69	63	59	55
	10	107	107	106	101	97	94	90	84	75	69	63	59	55
	20	93	93	93	92	91	90	89	84	75	69	63	59	55
	30	81	81	81	81	81	80	79	78	75	69	63	59	55
	40	72	72	72	72	72	72	72	71	70	68	63	59	55
	50	66	66	66	66	66	66	66	66	65	64	63	59	55
	60	61	61	61	61	61	61	61	61	61	60	60	59	55
	70	57	57	57	57	57	57	57	57	57	57	57	56	55
	80	53	53	53	53	53	53	53	53	53	53	53	53	53
	90	51	51	51	51	51	51	51	51	51	51	51	51	51

Notes:

1. Tables are based on critical rail span for load combinations as specified in chapter 2 of the ASCE 7-16 and allowable design loads per the 2015 Aluminum Design Manual.
2. Panels are assumed to be in landscape orientation with a maximum width of 42"

Structural ENGINUITY INC
Ingenuity in Engineering

SUNMODO®

Max Rail Spans for SunModo SMR100 System

Table 107b

Mean Roof Height: h ≤ 15 ft
Roof Angle: 27 < θ ≤ 45 degrees
Exposure Category: C

Panel Orientation: Landscape
North/South Support γ_E = 1.5
Roof Type : Gable

Roof Wind Zone	Ground Snow Load (psf)	Wind Speed (mph)												
		90	95	100	105	110	115	120	130	140	150	160	170	180
Zones 1, 2e, & 2r	0	114	108	103	99	95	91	88	80	72	66	61	57	54
	10	107	107	103	99	95	91	88	80	72	66	61	57	54
	20	93	93	93	92	91	90	88	80	72	66	61	57	54
	30	81	81	81	81	81	80	79	78	72	66	61	57	54
	40	72	72	72	72	72	72	72	71	70	66	61	57	54
	50	66	66	66	66	66	66	66	66	65	64	61	57	54
	60	61	61	61	61	61	61	61	61	61	60	60	57	54
	70	57	57	57	57	57	57	57	57	57	57	57	56	54
	80	53	53	53	53	53	53	53	53	53	53	53	53	53
	90	51	51	51	51	51	51	51	51	51	51	51	51	51
Zones 2n & 3r	0	107	102	97	93	90	87	82	74	67	62	58	54	51
	10	107	102	97	93	90	87	82	74	67	62	58	54	51
	20	93	93	93	92	90	87	82	74	67	62	58	54	51
	30	81	81	81	81	81	80	79	74	67	62	58	54	51
	40	72	72	72	72	72	72	72	71	67	62	58	54	51
	50	66	66	66	66	66	66	66	66	65	62	58	54	51
	60	61	61	61	61	61	61	61	61	61	60	58	54	51
	70	57	57	57	57	57	57	57	57	57	57	57	54	51
	80	53	53	53	53	53	53	53	53	53	53	53	53	51
	90	51	51	51	51	51	51	51	51	51	51	51	51	51
Zone 3e	0	97	93	89	85	80	75	71	64	58	54	50	47	44
	10	97	93	89	85	80	75	71	64	58	54	50	47	44
	20	93	93	89	85	80	75	71	64	58	54	50	47	44
	30	81	81	81	81	80	75	71	64	58	54	50	47	44
	40	72	72	72	72	72	72	71	64	58	54	50	47	44
	50	66	66	66	66	66	66	66	64	58	54	50	47	44
	60	61	61	61	61	61	61	61	61	58	54	50	47	44
	70	57	57	57	57	57	57	57	57	57	54	50	47	44
	80	53	53	53	53	53	53	53	53	53	53	50	47	44
	90	51	51	51	51	51	51	51	51	51	51	50	47	44

Notes:

1. Tables are based on critical rail span for load combinations as specified in chapter 2 of the ASCE 7-16 and allowable design loads per the 2015 Aluminum Design Manual.
2. Panels are assumed to be in landscape orientation with a maximum width of 42"

Structural ENGINUITY INC
Ingenuity in Engineering

SUNMODO®

Max Rail Spans for SunModo SMR100 System

Table 108a

Mean Roof Height: h ≤ 15 ft
Roof Angle: 27 < θ ≤ 45 degrees
Exposure Category: D

Panel Orientation: Landscape
North/South Support γ_E = 1
Roof Type : Gable

Roof Wind Zone	Ground Snow Load (psf)	Wind Speed (mph)												
		90	95	100	105	110	115	120	130	140	150	160	170	180
Zones 1, 2e, & 2r	0	118	118	114	109	104	100	97	90	84	76	69	64	60
	10	107	107	106	104	102	100	97	90	84	76	69	64	60
	20	93	92	91	90	89	87	86	83	81	76	69	64	60
	30	81	81	81	80	79	78	77	75	74	72	69	64	60
	40	72	72	72	72	72	72	71	69	68	66	65	63	60
	50	66	66	66	66	66	66	66	65	64	62	61	60	59
	60	61	61	61	61	61	61	61	61	60	59	58	57	56
	70	57	57	57	57	57	57	57	57	57	56	55	54	53
	80	53	53	53	53	53	53	53	53	53	53	53	52	51
	90	51	51	51	51	51	51	51	51	51	51	51	50	49
Zones 2n & 3r	0	117	112	107	102	98	95	91	85	77	70	65	61	57
	10	107	107	106	102	98	95	91	85	77	70	65	61	57
	20	93	92	91	90	89	87	86	83	77	70	65	61	57
	30	81	81	81	80	79	78	77	75	74	70	65	61	57
	40	72	72	72	72	72	72	71	69	68	66	65	61	57
	50	66	66	66	66	66	66	66	65	64	62	61	60	57
	60	61	61	61	61	61	61	61	61	60	59	58	57	56
	70	57	57	57	57	57	57	57	57	57	56	55	54	53
	80	53	53	53	53	53	53	53	53	53	53	53	52	51
	90	51	51	51	51	51	51	51	51	51	51	51	50	49
Zone 3e	0	106	102	97	93	90	86	82	73	66	61	57	53	49
	10	106	102	97	93	90	86	82	73	66	61	57	53	49
	20	93	92	91	90	89	86	82	73	66	61	57	53	49
	30	81	81	81	80	79	78	77	73	66	61	57	53	49
	40	72	72	72	72	72	72	71	69	66	61	57	53	49
	50	66	66	66	66	66	66	66	65	64	61	57	53	49
	60	61	61	61	61	61	61	61	61	60	59	57	53	49
	70	57	57	57	57	57	57	57	57	57	56	55	53	49
	80	53	53	53	53	53	53	53	53	53	53	53	52	49
	90	51	51	51	51	51	51	51	51	51	51	51	50	49

Notes:

1. Tables are based on critical rail span for load combinations as specified in chapter 2 of the ASCE 7-16 and allowable design loads per the 2015 Aluminum Design Manual.
2. Panels are assumed to be in landscape orientation with a maximum width of 42"

Structural ENGINUITY INC
Ingenuity in Engineering

SUNMODO®

Max Rail Spans for SunModo SMR100 System

Table 108b

Mean Roof Height: h ≤ 15 ft
Roof Angle: 27 < θ ≤ 45 degrees
Exposure Category: D

Panel Orientation: Landscape
North/South Support γ_E = 1.5
Roof Type : Gable

Roof Wind Zone	Ground Snow Load (psf)	Wind Speed (mph)												
		90	95	100	105	110	115	120	130	140	150	160	170	180
Zones 1, 2e, & 2r	0	104	99	95	91	87	83	78	69	64	59	55	52	49
	10	104	99	95	91	87	83	78	69	64	59	55	52	49
	20	93	92	91	90	87	83	78	69	64	59	55	52	49
	30	81	81	81	80	79	78	77	69	64	59	55	52	49
	40	72	72	72	72	72	72	71	69	64	59	55	52	49
	50	66	66	66	66	66	66	66	65	64	59	55	52	49
	60	61	61	61	61	61	61	61	61	60	59	55	52	49
	70	57	57	57	57	57	57	57	57	57	56	55	52	49
	80	53	53	53	53	53	53	53	53	53	53	53	52	49
	90	51	51	51	51	51	51	51	51	51	51	51	50	49
Zones 2n & 3r	0	98	94	90	86	81	76	72	65	60	56	52	49	46
	10	98	94	90	86	81	76	72	65	60	56	52	49	46
	20	93	92	90	86	81	76	72	65	60	56	52	49	46
	30	81	81	81	80	79	76	72	65	60	56	52	49	46
	40	72	72	72	72	72	72	71	65	60	56	52	49	46
	50	66	66	66	66	66	66	66	65	60	56	52	49	46
	60	61	61	61	61	61	61	61	61	60	56	52	49	46
	70	57	57	57	57	57	57	57	57	57	56	52	49	46
	80	53	53	53	53	53	53	53	53	53	53	52	49	46
	90	51	51	51	51	51	51	51	51	51	51	51	49	46
Zone 3e	0	89	86	80	74	70	66	63	57	52	48	45	42	39
	10	89	86	80	74	70	66	63	57	52	48	45	42	39
	20	89	86	80	74	70	66	63	57	52	48	45	42	39
	30	81	81	80	74	70	66	63	57	52	48	45	42	39
	40	72	72	72	72	70	66	63	57	52	48	45	42	39
	50	66	66	66	66	66	66	63	57	52	48	45	42	39
	60	61	61	61	61	61	61	61	57	52	48	45	42	39
	70	57	57	57	57	57	57	57	57	52	48	45	42	39
	80	53	53	53	53	53	53	53	53	52	48	45	42	39
	90	51	51	51	51	51	51	51	51	51	48	45	42	39

Notes:

1. Tables are based on critical rail span for load combinations as specified in chapter 2 of the ASCE 7-16 and allowable design loads per the 2015 Aluminum Design Manual.
2. Panels are assumed to be in landscape orientation with a maximum width of 42"

Structural ENGINUITY INC
Ingenuity in Engineering

SUNMODO®

Max Rail Spans for SunModo SMR100 System

Table 109a

Mean Roof Height: h ≤ 15 ft
Roof Angle: 7 < θ ≤ 20 degrees
Exposure Category: B

Panel Orientation: Landscape
North/South Support γ_E = 1
Roof Type : Hip h/B = ≥ 0.8

Roof Wind Zone	Ground Snow Load (psf)	Wind Speed (mph)												
		90	95	100	105	110	115	120	130	140	150	160	170	180
Zone 1	0	118	118	118	118	118	118	118	112	106	100	95	90	85
	10	100	100	100	100	100	100	100	100	100	98	95	90	85
	20	79	79	79	79	79	79	79	79	79	79	79	78	76
	30	79	79	79	79	79	79	79	79	79	79	79	78	76
	40	70	70	70	70	70	70	70	70	70	70	70	70	70
	50	63	63	63	63	63	63	63	63	63	63	63	63	63
	60	58	58	58	58	58	58	58	58	58	58	58	58	58
	70	54	54	54	54	54	54	54	54	54	54	54	54	54
	80	51	51	51	51	51	51	51	51	51	51	51	51	51
	90	48	48	48	48	48	48	48	48	48	48	48	48	48
Zone 2r	0	118	118	118	118	118	114	110	102	96	90	83	77	71
	10	100	100	100	100	100	100	100	100	96	90	83	77	71
	20	79	79	79	79	79	79	79	79	79	79	79	77	71
	30	79	79	79	79	79	79	79	79	79	79	79	77	71
	40	70	70	70	70	70	70	70	70	70	70	70	70	70
	50	63	63	63	63	63	63	63	63	63	63	63	63	63
	60	58	58	58	58	58	58	58	58	58	58	58	58	58
	70	54	54	54	54	54	54	54	54	54	54	54	54	54
	80	51	51	51	51	51	51	51	51	51	51	51	51	51
	90	48	48	48	48	48	48	48	48	48	48	48	48	48
Zones 2e & 3	0	118	118	118	118	115	110	106	99	93	86	79	73	68
	10	100	100	100	100	100	100	100	99	93	86	79	73	68
	20	79	79	79	79	79	79	79	79	79	79	79	73	68
	30	79	79	79	79	79	79	79	79	79	79	79	73	68
	40	70	70	70	70	70	70	70	70	70	70	70	70	68
	50	63	63	63	63	63	63	63	63	63	63	63	63	63
	60	58	58	58	58	58	58	58	58	58	58	58	58	58
	70	54	54	54	54	54	54	54	54	54	54	54	54	54
	80	51	51	51	51	51	51	51	51	51	51	51	51	51
	90	48	48	48	48	48	48	48	48	48	48	48	48	48

Notes:

1. Tables are based on critical rail span for load combinations as specified in chapter 2 of the ASCE 7-16 and allowable design loads per the 2015 Aluminum Design Manual.
2. Panels are assumed to be in landscape orientation with a maximum width of 42"

Structural ENGINUITY INC
Ingenuity in Engineering

SUNMODO®

Max Rail Spans for SunModo SMR100 System

Table 109b

Mean Roof Height: h ≤ 15 ft
Roof Angle: 7 < θ ≤ 20 degrees
Exposure Category: B

Panel Orientation: Landscape
North/South Support γ_E = 1.5
Roof Type : Hip h/B = ≥ 0.8

Roof Wind Zone	Ground Snow Load (psf)	Wind Speed (mph)												
		90	95	100	105	110	115	120	130	140	150	160	170	180
Zone 1	0	118	118	118	114	109	105	101	95	90	82	76	71	66
	10	100	100	100	100	100	100	100	95	90	82	76	71	66
	20	79	79	79	79	79	79	79	79	79	79	76	71	66
	30	79	79	79	79	79	79	79	79	79	79	76	71	66
	40	70	70	70	70	70	70	70	70	70	70	70	70	66
	50	63	63	63	63	63	63	63	63	63	63	63	63	63
	60	58	58	58	58	58	58	58	58	58	58	58	58	58
	70	54	54	54	54	54	54	54	54	54	54	54	54	54
	80	51	51	51	51	51	51	51	51	51	51	51	51	51
	90	48	48	48	48	48	48	48	48	48	48	48	48	48
Zone 2r	0	118	113	108	103	99	95	92	84	76	69	64	60	57
	10	100	100	100	100	99	95	92	84	76	69	64	60	57
	20	79	79	79	79	79	79	79	79	76	69	64	60	57
	30	79	79	79	79	79	79	79	79	76	69	64	60	57
	40	70	70	70	70	70	70	70	70	70	69	64	60	57
	50	63	63	63	63	63	63	63	63	63	63	63	60	57
	60	58	58	58	58	58	58	58	58	58	58	58	58	57
	70	54	54	54	54	54	54	54	54	54	54	54	54	54
	80	51	51	51	51	51	51	51	51	51	51	51	51	51
	90	48	48	48	48	48	48	48	48	48	48	48	48	48
Zones 2e & 3	0	115	109	104	100	96	92	89	79	72	66	62	58	54
	10	100	100	100	100	96	92	89	79	72	66	62	58	54
	20	79	79	79	79	79	79	79	79	72	66	62	58	54
	30	79	79	79	79	79	79	79	79	72	66	62	58	54
	40	70	70	70	70	70	70	70	70	70	66	62	58	54
	50	63	63	63	63	63	63	63	63	63	63	62	58	54
	60	58	58	58	58	58	58	58	58	58	58	58	58	54
	70	54	54	54	54	54	54	54	54	54	54	54	54	54
	80	51	51	51	51	51	51	51	51	51	51	51	51	51
	90	48	48	48	48	48	48	48	48	48	48	48	48	48

Notes:

1. Tables are based on critical rail span for load combinations as specified in chapter 2 of the ASCE 7-16 and allowable design loads per the 2015 Aluminum Design Manual.
2. Panels are assumed to be in landscape orientation with a maximum width of 42"

Structural ENGINUITY INC
Ingenuity in Engineering

SUNMODO®

Max Rail Spans for SunModo SMR100 System

Table 110a

Mean Roof Height: h ≤ 15 ft
Roof Angle: 7 < θ ≤ 20 degrees
Exposure Category: C

Panel Orientation: Landscape
North/South Support γ_E = 1
Roof Type : Hip h/B = ≥ 0.8

Roof Wind Zone	Ground Snow Load (psf)	Wind Speed (mph)												
		90	95	100	105	110	115	120	130	140	150	160	170	180
Zone 1	0	118	118	118	114	109	105	102	95	90	83	76	71	66
	10	100	100	100	100	100	100	99	95	90	83	76	71	66
	20	79	79	79	79	79	79	79	79	78	76	75	71	66
	30	79	79	79	79	79	79	79	79	78	76	75	71	66
	40	70	70	70	70	70	70	70	70	70	69	68	67	66
	50	63	63	63	63	63	63	63	63	63	63	63	63	62
	60	58	58	58	58	58	58	58	58	58	58	58	58	58
	70	54	54	54	54	54	54	54	54	54	54	54	54	54
	80	51	51	51	51	51	51	51	51	51	51	51	51	51
	90	48	48	48	48	48	48	48	48	48	48	48	48	48
Zone 2r	0	118	114	108	104	99	96	92	84	76	69	65	61	57
	10	100	100	100	100	99	96	92	84	76	69	65	61	57
	20	79	79	79	79	79	79	79	79	76	69	65	61	57
	30	79	79	79	79	79	79	79	79	76	69	65	61	57
	40	70	70	70	70	70	70	70	70	70	69	65	61	57
	50	63	63	63	63	63	63	63	63	63	63	63	61	57
	60	58	58	58	58	58	58	58	58	58	58	58	58	57
	70	54	54	54	54	54	54	54	54	54	54	54	54	54
	80	51	51	51	51	51	51	51	51	51	51	51	51	51
	90	48	48	48	48	48	48	48	48	48	48	48	48	48
Zones 2e & 3	0	115	109	104	100	96	92	89	80	72	66	62	58	55
	10	100	100	100	100	96	92	89	80	72	66	62	58	55
	20	79	79	79	79	79	79	79	79	72	66	62	58	55
	30	79	79	79	79	79	79	79	79	72	66	62	58	55
	40	70	70	70	70	70	70	70	70	70	66	62	58	55
	50	63	63	63	63	63	63	63	63	63	63	62	58	55
	60	58	58	58	58	58	58	58	58	58	58	58	58	55
	70	54	54	54	54	54	54	54	54	54	54	54	54	54
	80	51	51	51	51	51	51	51	51	51	51	51	51	51
	90	48	48	48	48	48	48	48	48	48	48	48	48	48

Notes:

1. Tables are based on critical rail span for load combinations as specified in chapter 2 of the ASCE 7-16 and allowable design loads per the 2015 Aluminum Design Manual.
2. Panels are assumed to be in landscape orientation with a maximum width of 42"

Structural ENGINUITY INC
Ingenuity in Engineering

SUNMODO®

Max Rail Spans for SunModo SMR100 System

Table 110b

Mean Roof Height: h ≤ 15 ft
Roof Angle: 7 < θ ≤ 20 degrees
Exposure Category: C

Panel Orientation: Landscape
North/South Support γ_E = 1.5
Roof Type : Hip h/B = ≥ 0.8

Roof Wind Zone	Ground Snow Load (psf)	Wind Speed (mph)												
		90	95	100	105	110	115	120	130	140	150	160	170	180
Zone 1	0	109	104	100	96	93	89	85	77	70	65	61	57	54
	10	100	100	100	96	93	89	85	77	70	65	61	57	54
	20	79	79	79	79	79	79	79	77	70	65	61	57	54
	30	79	79	79	79	79	79	79	77	70	65	61	57	54
	40	70	70	70	70	70	70	70	70	70	65	61	57	54
	50	63	63	63	63	63	63	63	63	63	63	61	57	54
	60	58	58	58	58	58	58	58	58	58	58	58	57	54
	70	54	54	54	54	54	54	54	54	54	54	54	54	54
	80	51	51	51	51	51	51	51	51	51	51	51	51	51
	90	48	48	48	48	48	48	48	48	48	48	48	48	48
Zone 2r	0	99	95	91	86	80	76	71	65	60	56	52	49	46
	10	99	95	91	86	80	76	71	65	60	56	52	49	46
	20	79	79	79	79	79	76	71	65	60	56	52	49	46
	30	79	79	79	79	79	76	71	65	60	56	52	49	46
	40	70	70	70	70	70	70	70	65	60	56	52	49	46
	50	63	63	63	63	63	63	63	63	60	56	52	49	46
	60	58	58	58	58	58	58	58	58	58	56	52	49	46
	70	54	54	54	54	54	54	54	54	54	54	52	49	46
	80	51	51	51	51	51	51	51	51	51	51	51	49	46
	90	48	48	48	48	48	48	48	48	48	48	48	48	46
Zones 2e & 3	0	96	92	87	81	76	72	68	62	58	53	50	47	44
	10	96	92	87	81	76	72	68	62	58	53	50	47	44
	20	79	79	79	79	76	72	68	62	58	53	50	47	44
	30	79	79	79	79	76	72	68	62	58	53	50	47	44
	40	70	70	70	70	70	70	68	62	58	53	50	47	44
	50	63	63	63	63	63	63	63	62	58	53	50	47	44
	60	58	58	58	58	58	58	58	58	58	53	50	47	44
	70	54	54	54	54	54	54	54	54	54	53	50	47	44
	80	51	51	51	51	51	51	51	51	51	51	50	47	44
	90	48	48	48	48	48	48	48	48	48	48	48	47	44

Notes:

1. Tables are based on critical rail span for load combinations as specified in chapter 2 of the ASCE 7-16 and allowable design loads per the 2015 Aluminum Design Manual.
2. Panels are assumed to be in landscape orientation with a maximum width of 42"

Structural ENGINUITY INC
Ingenuity in Engineering

SUNMODO®

Max Rail Spans for SunModo SMR100 System

Table 111a

Mean Roof Height: h ≤ 15 ft
Roof Angle: 7 < θ ≤ 20 degrees
Exposure Category: D

Panel Orientation: Landscape
North/South Support γ_E = 1
Roof Type : Hip h/B = ≥ 0.8

Roof Wind Zone	Ground Snow Load (psf)	Wind Speed (mph)												
		90	95	100	105	110	115	120	130	140	150	160	170	180
Zone 1	0	118	114	109	105	101	97	94	88	80	73	68	64	60
	10	100	100	100	100	99	97	94	88	80	73	68	64	60
	20	79	79	79	79	79	79	79	77	75	73	68	64	60
	30	79	79	79	79	79	79	79	77	75	73	68	64	60
	40	70	70	70	70	70	70	70	70	69	68	66	64	60
	50	63	63	63	63	63	63	63	63	63	63	62	61	60
	60	58	58	58	58	58	58	58	58	58	58	58	57	57
	70	54	54	54	54	54	54	54	54	54	54	54	54	54
	80	51	51	51	51	51	51	51	51	51	51	51	51	51
	90	48	48	48	48	48	48	48	48	48	48	48	48	48
Zone 2r	0	109	104	99	95	92	88	82	74	67	62	58	55	52
	10	100	100	99	95	92	88	82	74	67	62	58	55	52
	20	79	79	79	79	79	79	79	74	67	62	58	55	52
	30	79	79	79	79	79	79	79	74	67	62	58	55	52
	40	70	70	70	70	70	70	70	70	67	62	58	55	52
	50	63	63	63	63	63	63	63	63	63	62	58	55	52
	60	58	58	58	58	58	58	58	58	58	58	58	55	52
	70	54	54	54	54	54	54	54	54	54	54	54	54	52
	80	51	51	51	51	51	51	51	51	51	51	51	51	51
	90	48	48	48	48	48	48	48	48	48	48	48	48	48
Zones 2e & 3	0	105	100	96	92	88	83	78	70	64	60	56	52	49
	10	100	100	96	92	88	83	78	70	64	60	56	52	49
	20	79	79	79	79	79	79	78	70	64	60	56	52	49
	30	79	79	79	79	79	79	78	70	64	60	56	52	49
	40	70	70	70	70	70	70	70	70	64	60	56	52	49
	50	63	63	63	63	63	63	63	63	63	60	56	52	49
	60	58	58	58	58	58	58	58	58	58	58	56	52	49
	70	54	54	54	54	54	54	54	54	54	54	54	52	49
	80	51	51	51	51	51	51	51	51	51	51	51	51	49
	90	48	48	48	48	48	48	48	48	48	48	48	48	48

Notes:

1. Tables are based on critical rail span for load combinations as specified in chapter 2 of the ASCE 7-16 and allowable design loads per the 2015 Aluminum Design Manual.
2. Panels are assumed to be in landscape orientation with a maximum width of 42"

Structural ENGINUITY INC
Ingenuity in Engineering

SUNMODO®

Max Rail Spans for SunModo SMR100 System

Table 111b

Mean Roof Height: h ≤ 15 ft
Roof Angle: 7 < θ ≤ 20 degrees
Exposure Category: D

Panel Orientation: Landscape
North/South Support γ_E = 1.5
Roof Type : Hip h/B = ≥ 0.8

Roof Wind Zone	Ground Snow Load (psf)	Wind Speed (mph)												
		90	95	100	105	110	115	120	130	140	150	160	170	180
Zone 1	0	101	96	93	89	84	79	75	68	63	59	55	51	48
	10	100	96	93	89	84	79	75	68	63	59	55	51	48
	20	79	79	79	79	79	79	75	68	63	59	55	51	48
	30	79	79	79	79	79	79	75	68	63	59	55	51	48
	40	70	70	70	70	70	70	70	68	63	59	55	51	48
	50	63	63	63	63	63	63	63	63	63	59	55	51	48
	60	58	58	58	58	58	58	58	58	58	58	55	51	48
	70	54	54	54	54	54	54	54	54	54	54	54	51	48
	80	51	51	51	51	51	51	51	51	51	51	51	51	48
	90	48	48	48	48	48	48	48	48	48	48	48	48	48
Zone 2r	0	91	86	80	75	70	67	64	59	54	50	47	44	42
	10	91	86	80	75	70	67	64	59	54	50	47	44	42
	20	79	79	79	75	70	67	64	59	54	50	47	44	42
	30	79	79	79	75	70	67	64	59	54	50	47	44	42
	40	70	70	70	70	70	67	64	59	54	50	47	44	42
	50	63	63	63	63	63	63	63	59	54	50	47	44	42
	60	58	58	58	58	58	58	58	58	54	50	47	44	42
	70	54	54	54	54	54	54	54	54	54	50	47	44	42
	80	51	51	51	51	51	51	51	51	51	50	47	44	42
	90	48	48	48	48	48	48	48	48	48	48	47	44	42
Zones 2e & 3	0	88	81	76	71	67	64	61	56	52	48	45	42	40
	10	88	81	76	71	67	64	61	56	52	48	45	42	40
	20	79	79	76	71	67	64	61	56	52	48	45	42	40
	30	79	79	76	71	67	64	61	56	52	48	45	42	40
	40	70	70	70	70	67	64	61	56	52	48	45	42	40
	50	63	63	63	63	63	63	61	56	52	48	45	42	40
	60	58	58	58	58	58	58	58	56	52	48	45	42	40
	70	54	54	54	54	54	54	54	54	52	48	45	42	40
	80	51	51	51	51	51	51	51	51	51	48	45	42	40
	90	48	48	48	48	48	48	48	48	48	48	45	42	40

Notes:

1. Tables are based on critical rail span for load combinations as specified in chapter 2 of the ASCE 7-16 and allowable design loads per the 2015 Aluminum Design Manual.
2. Panels are assumed to be in landscape orientation with a maximum width of 42"

Structural ENGINUITY INC
Ingenuity in Engineering

SUNMODO®

Max Rail Spans for SunModo SMR100 System

Table 112a

Mean Roof Height: h ≤ 15 ft
Roof Angle: 7 < θ ≤ 20 degrees
Exposure Category: B

Panel Orientation: Landscape
North/South Support γ_E = 1
Roof Type : Hip h/B = ≤ 0.5

Roof Wind Zone	Ground Snow Load (psf)	Wind Speed (mph)												
		90	95	100	105	110	115	120	130	140	150	160	170	180
Zone 1	0	118	118	118	118	118	118	118	118	118	114	108	103	98
	10	100	100	100	100	100	100	100	100	99	97	95	93	91
	20	79	79	79	79	79	79	79	79	79	79	78	77	76
	30	79	79	79	79	79	79	79	79	79	79	78	77	76
	40	70	70	70	70	70	70	70	70	70	70	70	70	70
	50	63	63	63	63	63	63	63	63	63	63	63	63	63
	60	58	58	58	58	58	58	58	58	58	58	58	58	58
	70	54	54	54	54	54	54	54	54	54	54	54	54	54
	80	51	51	51	51	51	51	51	51	51	51	51	51	51
	90	48	48	48	48	48	48	48	48	48	48	48	48	48
Zone 2r	0	118	118	118	118	118	114	110	102	96	90	83	77	71
	10	100	100	100	100	100	100	100	100	96	90	83	77	71
	20	79	79	79	79	79	79	79	79	79	79	78	77	71
	30	79	79	79	79	79	79	79	79	79	79	78	77	71
	40	70	70	70	70	70	70	70	70	70	70	70	70	70
	50	63	63	63	63	63	63	63	63	63	63	63	63	63
	60	58	58	58	58	58	58	58	58	58	58	58	58	58
	70	54	54	54	54	54	54	54	54	54	54	54	54	54
	80	51	51	51	51	51	51	51	51	51	51	51	51	51
	90	48	48	48	48	48	48	48	48	48	48	48	48	48
Zones 2e & 3	0	118	118	118	118	118	118	118	116	108	102	96	92	86
	10	100	100	100	100	100	100	100	100	99	97	95	92	86
	20	79	79	79	79	79	79	79	79	79	79	78	77	76
	30	79	79	79	79	79	79	79	79	79	79	78	77	76
	40	70	70	70	70	70	70	70	70	70	70	70	70	70
	50	63	63	63	63	63	63	63	63	63	63	63	63	63
	60	58	58	58	58	58	58	58	58	58	58	58	58	58
	70	54	54	54	54	54	54	54	54	54	54	54	54	54
	80	51	51	51	51	51	51	51	51	51	51	51	51	51
	90	48	48	48	48	48	48	48	48	48	48	48	48	48

Notes:

1. Tables are based on critical rail span for load combinations as specified in chapter 2 of the ASCE 7-16 and allowable design loads per the 2015 Aluminum Design Manual.
2. Panels are assumed to be in landscape orientation with a maximum width of 42"

Structural ENGINUITY INC
Ingenuity in Engineering

SUNMODO®

Max Rail Spans for SunModo SMR100 System

Table 112b

Mean Roof Height: h ≤ 15 ft
Roof Angle: 7 < θ ≤ 20 degrees
Exposure Category: B

Panel Orientation: Landscape
North/South Support γ_E = 1.5
Roof Type : Hip h/B = ≤ 0.5

Roof Wind Zone	Ground Snow Load (psf)	Wind Speed (mph)												
		90	95	100	105	110	115	120	130	140	150	160	170	180
Zone 1	0	118	118	118	118	118	118	116	109	102	97	92	86	80
	10	100	100	100	100	100	100	100	100	99	97	92	86	80
	20	79	79	79	79	79	79	79	79	79	79	78	77	76
	30	79	79	79	79	79	79	79	79	79	79	78	77	76
	40	70	70	70	70	70	70	70	70	70	70	70	70	70
	50	63	63	63	63	63	63	63	63	63	63	63	63	63
	60	58	58	58	58	58	58	58	58	58	58	58	58	58
	70	54	54	54	54	54	54	54	54	54	54	54	54	54
	80	51	51	51	51	51	51	51	51	51	51	51	51	51
	90	48	48	48	48	48	48	48	48	48	48	48	48	48
Zone 2r	0	118	113	108	103	99	95	92	84	76	69	64	60	57
	10	100	100	100	100	99	95	92	84	76	69	64	60	57
	20	79	79	79	79	79	79	79	79	76	69	64	60	57
	30	79	79	79	79	79	79	79	79	76	69	64	60	57
	40	70	70	70	70	70	70	70	70	70	69	64	60	57
	50	63	63	63	63	63	63	63	63	63	63	63	60	57
	60	58	58	58	58	58	58	58	58	58	58	58	58	57
	70	54	54	54	54	54	54	54	54	54	54	54	54	54
	80	51	51	51	51	51	51	51	51	51	51	51	51	51
	90	48	48	48	48	48	48	48	48	48	48	48	48	48
Zones 2e & 3	0	118	118	118	117	112	108	104	97	91	84	77	71	66
	10	100	100	100	100	100	100	100	97	91	84	77	71	66
	20	79	79	79	79	79	79	79	79	79	79	77	71	66
	30	79	79	79	79	79	79	79	79	79	79	77	71	66
	40	70	70	70	70	70	70	70	70	70	70	70	70	66
	50	63	63	63	63	63	63	63	63	63	63	63	63	63
	60	58	58	58	58	58	58	58	58	58	58	58	58	58
	70	54	54	54	54	54	54	54	54	54	54	54	54	54
	80	51	51	51	51	51	51	51	51	51	51	51	51	51
	90	48	48	48	48	48	48	48	48	48	48	48	48	48

Notes:

1. Tables are based on critical rail span for load combinations as specified in chapter 2 of the ASCE 7-16 and allowable design loads per the 2015 Aluminum Design Manual.
2. Panels are assumed to be in landscape orientation with a maximum width of 42"

Structural ENGINUITY INC
Ingenuity in Engineering

SUNMODO®

Max Rail Spans for SunModo SMR100 System

Table 113a

Mean Roof Height: h ≤ 15 ft
Roof Angle: 7 < θ ≤ 20 degrees
Exposure Category: C

Panel Orientation: Landscape
North/South Support γ_E = 1
Roof Type : Hip h/B = ≤ 0.5

Roof Wind Zone	Ground Snow Load (psf)	Wind Speed (mph)												
		90	95	100	105	110	115	120	130	140	150	160	170	180
Zone 1	0	118	118	118	118	118	118	117	109	102	97	92	87	81
	10	100	100	100	100	100	99	98	95	93	91	88	86	81
	20	79	79	79	79	79	79	79	79	77	76	74	73	71
	30	79	79	79	79	79	79	79	79	77	76	74	73	71
	40	70	70	70	70	70	70	70	70	70	69	68	67	66
	50	63	63	63	63	63	63	63	63	63	63	63	63	62
	60	58	58	58	58	58	58	58	58	58	58	58	58	58
	70	54	54	54	54	54	54	54	54	54	54	54	54	54
	80	51	51	51	51	51	51	51	51	51	51	51	51	51
	90	48	48	48	48	48	48	48	48	48	48	48	48	48
Zone 2r	0	118	114	108	104	99	96	92	84	76	69	65	61	57
	10	100	100	100	100	99	96	92	84	76	69	65	61	57
	20	79	79	79	79	79	79	79	79	76	69	65	61	57
	30	79	79	79	79	79	79	79	79	76	69	65	61	57
	40	70	70	70	70	70	70	70	70	70	69	65	61	57
	50	63	63	63	63	63	63	63	63	63	63	63	61	57
	60	58	58	58	58	58	58	58	58	58	58	58	58	57
	70	54	54	54	54	54	54	54	54	54	54	54	54	54
	80	51	51	51	51	51	51	51	51	51	51	51	51	51
	90	48	48	48	48	48	48	48	48	48	48	48	48	48
Zones 2e & 3	0	118	118	118	118	113	108	104	97	91	84	77	71	66
	10	100	100	100	100	100	99	98	95	91	84	77	71	66
	20	79	79	79	79	79	79	79	79	77	76	74	71	66
	30	79	79	79	79	79	79	79	79	77	76	74	71	66
	40	70	70	70	70	70	70	70	70	70	69	68	67	66
	50	63	63	63	63	63	63	63	63	63	63	63	63	62
	60	58	58	58	58	58	58	58	58	58	58	58	58	58
	70	54	54	54	54	54	54	54	54	54	54	54	54	54
	80	51	51	51	51	51	51	51	51	51	51	51	51	51
	90	48	48	48	48	48	48	48	48	48	48	48	48	48

Notes:

1. Tables are based on critical rail span for load combinations as specified in chapter 2 of the ASCE 7-16 and allowable design loads per the 2015 Aluminum Design Manual.
2. Panels are assumed to be in landscape orientation with a maximum width of 42"

Structural ENGINUITY INC
Ingenuity in Engineering

SUNMODO®

Max Rail Spans for SunModo SMR100 System

Table 113b

Mean Roof Height: h ≤ 15 ft
Roof Angle: 7 < θ ≤ 20 degrees
Exposure Category: C

Panel Orientation: Landscape
North/South Support γ_E = 1.5
Roof Type : Hip h/B = ≤ 0.5

Roof Wind Zone	Ground Snow Load (psf)	Wind Speed (mph)												
		90	95	100	105	110	115	120	130	140	150	160	170	180
Zone 1	0	118	118	115	110	106	102	98	92	86	79	73	68	64
	10	100	100	100	100	100	99	98	92	86	79	73	68	64
	20	79	79	79	79	79	79	79	79	77	76	73	68	64
	30	79	79	79	79	79	79	79	79	77	76	73	68	64
	40	70	70	70	70	70	70	70	70	70	69	68	67	64
	50	63	63	63	63	63	63	63	63	63	63	63	63	62
	60	58	58	58	58	58	58	58	58	58	58	58	58	58
	70	54	54	54	54	54	54	54	54	54	54	54	54	54
	80	51	51	51	51	51	51	51	51	51	51	51	51	51
	90	48	48	48	48	48	48	48	48	48	48	48	48	48
Zone 2r	0	99	95	91	86	80	76	71	65	60	56	52	49	46
	10	99	95	91	86	80	76	71	65	60	56	52	49	46
	20	79	79	79	79	79	76	71	65	60	56	52	49	46
	30	79	79	79	79	79	76	71	65	60	56	52	49	46
	40	70	70	70	70	70	70	70	65	60	56	52	49	46
	50	63	63	63	63	63	63	63	63	60	56	52	49	46
	60	58	58	58	58	58	58	58	58	58	56	52	49	46
	70	54	54	54	54	54	54	54	54	54	54	52	49	46
	80	51	51	51	51	51	51	51	51	51	51	51	49	46
	90	48	48	48	48	48	48	48	48	48	48	48	48	46
Zones 2e & 3	0	112	107	102	98	94	91	87	78	70	65	61	57	54
	10	100	100	100	98	94	91	87	78	70	65	61	57	54
	20	79	79	79	79	79	79	79	78	70	65	61	57	54
	30	79	79	79	79	79	79	79	78	70	65	61	57	54
	40	70	70	70	70	70	70	70	70	70	65	61	57	54
	50	63	63	63	63	63	63	63	63	63	63	61	57	54
	60	58	58	58	58	58	58	58	58	58	58	58	57	54
	70	54	54	54	54	54	54	54	54	54	54	54	54	54
	80	51	51	51	51	51	51	51	51	51	51	51	51	51
	90	48	48	48	48	48	48	48	48	48	48	48	48	48

Notes:

1. Tables are based on critical rail span for load combinations as specified in chapter 2 of the ASCE 7-16 and allowable design loads per the 2015 Aluminum Design Manual.
2. Panels are assumed to be in landscape orientation with a maximum width of 42"

Structural ENGINUITY INC
Ingenuity in Engineering

SUNMODO®

Max Rail Spans for SunModo SMR100 System

Table 114a

Mean Roof Height: h ≤ 15 ft
Roof Angle: 7 < θ ≤ 20 degrees
Exposure Category: D

Panel Orientation: Landscape
North/South Support γ_E = 1
Roof Type : Hip h/B = ≤ 0.5

Roof Wind Zone	Ground Snow Load (psf)	Wind Speed (mph)												
		90	95	100	105	110	115	120	130	140	150	160	170	180
Zone 1	0	118	118	118	118	116	111	108	101	95	90	83	77	72
	10	100	100	100	99	97	96	95	92	90	87	83	77	72
	20	79	79	79	79	79	79	78	77	75	74	72	70	69
	30	79	79	79	79	79	79	78	77	75	74	72	70	69
	40	70	70	70	70	70	70	70	70	69	68	66	65	64
	50	63	63	63	63	63	63	63	63	63	63	62	61	60
	60	58	58	58	58	58	58	58	58	58	58	58	57	57
	70	54	54	54	54	54	54	54	54	54	54	54	54	54
	80	51	51	51	51	51	51	51	51	51	51	51	51	51
	90	48	48	48	48	48	48	48	48	48	48	48	48	48
Zone 2r	0	109	104	99	95	92	88	82	74	67	62	58	55	52
	10	100	100	99	95	92	88	82	74	67	62	58	55	52
	20	79	79	79	79	79	79	78	74	67	62	58	55	52
	30	79	79	79	79	79	79	78	74	67	62	58	55	52
	40	70	70	70	70	70	70	70	70	67	62	58	55	52
	50	63	63	63	63	63	63	63	63	63	62	58	55	52
	60	58	58	58	58	58	58	58	58	58	58	58	55	52
	70	54	54	54	54	54	54	54	54	54	54	54	54	52
	80	51	51	51	51	51	51	51	51	51	51	51	51	51
	90	48	48	48	48	48	48	48	48	48	48	48	48	48
Zones 2e & 3	0	118	118	112	108	103	99	96	90	81	74	68	64	60
	10	100	100	100	99	97	96	95	90	81	74	68	64	60
	20	79	79	79	79	79	79	78	77	75	74	68	64	60
	30	79	79	79	79	79	79	78	77	75	74	68	64	60
	40	70	70	70	70	70	70	70	70	69	68	66	64	60
	50	63	63	63	63	63	63	63	63	63	63	62	61	60
	60	58	58	58	58	58	58	58	58	58	58	58	57	57
	70	54	54	54	54	54	54	54	54	54	54	54	54	54
	80	51	51	51	51	51	51	51	51	51	51	51	51	51
	90	48	48	48	48	48	48	48	48	48	48	48	48	48

Notes:

1. Tables are based on critical rail span for load combinations as specified in chapter 2 of the ASCE 7-16 and allowable design loads per the 2015 Aluminum Design Manual.
2. Panels are assumed to be in landscape orientation with a maximum width of 42"

Structural ENGINUITY INC
Ingenuity in Engineering

SUNMODO®

Max Rail Spans for SunModo SMR100 System

Table 114b

Mean Roof Height: h ≤ 15 ft
Roof Angle: 7 < θ ≤ 20 degrees
Exposure Category: D

Panel Orientation: Landscape
North/South Support γ_E = 1.5
Roof Type : Hip h/B = ≤ 0.5

Roof Wind Zone	Ground Snow Load (psf)	Wind Speed (mph)												
		90	95	100	105	110	115	120	130	140	150	160	170	180
Zone 1	0	116	110	106	102	98	94	91	83	76	70	65	61	57
	10	100	100	100	99	97	94	91	83	76	70	65	61	57
	20	79	79	79	79	79	79	78	77	75	70	65	61	57
	30	79	79	79	79	79	79	78	77	75	70	65	61	57
	40	70	70	70	70	70	70	70	70	69	68	65	61	57
	50	63	63	63	63	63	63	63	63	63	63	62	61	57
	60	58	58	58	58	58	58	58	58	58	58	58	57	57
	70	54	54	54	54	54	54	54	54	54	54	54	54	54
	80	51	51	51	51	51	51	51	51	51	51	51	51	51
	90	48	48	48	48	48	48	48	48	48	48	48	48	48
Zone 2r	0	91	86	80	75	70	67	64	59	54	50	47	44	42
	10	91	86	80	75	70	67	64	59	54	50	47	44	42
	20	79	79	79	75	70	67	64	59	54	50	47	44	42
	30	79	79	79	75	70	67	64	59	54	50	47	44	42
	40	70	70	70	70	70	67	64	59	54	50	47	44	42
	50	63	63	63	63	63	63	63	59	54	50	47	44	42
	60	58	58	58	58	58	58	58	58	54	50	47	44	42
	70	54	54	54	54	54	54	54	54	54	50	47	44	42
	80	51	51	51	51	51	51	51	51	51	50	47	44	42
	90	48	48	48	48	48	48	48	48	48	48	47	44	42
Zones 2e & 3	0	103	98	94	90	85	80	76	68	63	59	55	51	48
	10	100	98	94	90	85	80	76	68	63	59	55	51	48
	20	79	79	79	79	79	79	76	68	63	59	55	51	48
	30	79	79	79	79	79	79	76	68	63	59	55	51	48
	40	70	70	70	70	70	70	70	68	63	59	55	51	48
	50	63	63	63	63	63	63	63	63	63	59	55	51	48
	60	58	58	58	58	58	58	58	58	58	58	55	51	48
	70	54	54	54	54	54	54	54	54	54	54	54	51	48
	80	51	51	51	51	51	51	51	51	51	51	51	51	48
	90	48	48	48	48	48	48	48	48	48	48	48	48	48

Notes:

1. Tables are based on critical rail span for load combinations as specified in chapter 2 of the ASCE 7-16 and allowable design loads per the 2015 Aluminum Design Manual.
2. Panels are assumed to be in landscape orientation with a maximum width of 42"

Structural ENGINUITY INC
Ingenuity in Engineering

SUNMODO®

Max Rail Spans for SunModo SMR100 System

Table 115a

Mean Roof Height: h ≤ 15 ft
Roof Angle: 20 < θ ≤ 27 degrees
Exposure Category: B

Panel Orientation: Landscape
North/South Support γ_E = 1
Roof Type : Hip

Roof Wind Zone	Ground Snow Load (psf)	Wind Speed (mph)												
		90	95	100	105	110	115	120	130	140	150	160	170	180
Zone 1	0	118	118	118	118	118	118	118	118	118	115	109	103	98
	10	107	107	107	107	107	107	107	107	107	107	105	102	98
	20	92	92	92	92	92	92	92	92	92	90	89	87	86
	30	79	79	79	79	79	79	79	79	79	79	79	77	76
	40	70	70	70	70	70	70	70	70	70	70	70	70	70
	50	63	63	63	63	63	63	63	63	63	63	63	63	63
	60	58	58	58	58	58	58	58	58	58	58	58	58	58
	70	54	54	54	54	54	54	54	54	54	54	54	54	54
	80	51	51	51	51	51	51	51	51	51	51	51	51	51
	90	48	48	48	48	48	48	48	48	48	48	48	48	48
Zones 2e, 2r, & 3	0	118	118	118	118	118	118	118	111	104	98	93	88	82
	10	107	107	107	107	107	107	107	107	104	98	93	88	82
	20	92	92	92	92	92	92	92	92	92	90	89	87	82
	30	79	79	79	79	79	79	79	79	79	79	79	77	76
	40	70	70	70	70	70	70	70	70	70	70	70	70	70
	50	63	63	63	63	63	63	63	63	63	63	63	63	63
	60	58	58	58	58	58	58	58	58	58	58	58	58	58
	70	54	54	54	54	54	54	54	54	54	54	54	54	54
	80	51	51	51	51	51	51	51	51	51	51	51	51	51
	90	48	48	48	48	48	48	48	48	48	48	48	48	48

Notes:

1. Tables are based on critical rail span for load combinations as specified in chapter 2 of the ASCE 7-16 and allowable design loads per the 2015 Aluminum Design Manual.
2. Panels are assumed to be in landscape orientation with a maximum width of 42"

Structural ENGINUITY INC
Ingenuity in Engineering

SUNMODO®

Max Rail Spans for SunModo SMR100 System

Table 115b

Mean Roof Height: h ≤ 15 ft
Roof Angle: 20 < θ ≤ 27 degrees
Exposure Category: B

Panel Orientation: Landscape
North/South Support γ_E = 1.5
Roof Type : Hip

Roof Wind Zone	Ground Snow Load (psf)	Wind Speed (mph)												
		90	95	100	105	110	115	120	130	140	150	160	170	180
Zone 1	0	118	118	118	118	118	118	118	109	102	96	91	86	79
	10	107	107	107	107	107	107	107	107	102	96	91	86	79
	20	92	92	92	92	92	92	92	92	92	90	89	86	79
	30	79	79	79	79	79	79	79	79	79	79	79	77	76
	40	70	70	70	70	70	70	70	70	70	70	70	70	70
	50	63	63	63	63	63	63	63	63	63	63	63	63	63
	60	58	58	58	58	58	58	58	58	58	58	58	58	58
	70	54	54	54	54	54	54	54	54	54	54	54	54	54
	80	51	51	51	51	51	51	51	51	51	51	51	51	51
	90	48	48	48	48	48	48	48	48	48	48	48	48	48
Zones 2e, 2r, & 3	0	118	118	118	112	108	103	100	93	87	79	72	67	63
	10	107	107	107	107	107	103	100	93	87	79	72	67	63
	20	92	92	92	92	92	92	92	92	87	79	72	67	63
	30	79	79	79	79	79	79	79	79	79	79	72	67	63
	40	70	70	70	70	70	70	70	70	70	70	70	67	63
	50	63	63	63	63	63	63	63	63	63	63	63	63	63
	60	58	58	58	58	58	58	58	58	58	58	58	58	58
	70	54	54	54	54	54	54	54	54	54	54	54	54	54
	80	51	51	51	51	51	51	51	51	51	51	51	51	51
	90	48	48	48	48	48	48	48	48	48	48	48	48	48

Notes:

1. Tables are based on critical rail span for load combinations as specified in chapter 2 of the ASCE 7-16 and allowable design loads per the 2015 Aluminum Design Manual.
2. Panels are assumed to be in landscape orientation with a maximum width of 42"

Structural ENGINUITY INC
Ingenuity in Engineering

SUNMODO®

Max Rail Spans for SunModo SMR100 System

Table 116a

Mean Roof Height: h ≤ 15 ft
Roof Angle: 20 < θ ≤ 27 degrees
Exposure Category: C

Panel Orientation: Landscape
North/South Support γ_E = 1
Roof Type : Hip

Roof Wind Zone	Ground Snow Load (psf)	Wind Speed (mph)												
		90	95	100	105	110	115	120	130	140	150	160	170	180
Zone 1	0	118	118	118	118	118	118	118	109	102	96	91	86	79
	10	107	107	107	107	107	107	107	105	102	96	91	86	79
	20	92	92	92	92	92	92	91	89	87	85	83	81	79
	30	79	79	79	79	79	79	79	79	77	76	74	73	71
	40	70	70	70	70	70	70	70	70	70	69	68	67	66
	50	63	63	63	63	63	63	63	63	63	63	63	62	62
	60	58	58	58	58	58	58	58	58	58	58	58	58	58
	70	54	54	54	54	54	54	54	54	54	54	54	54	54
	80	51	51	51	51	51	51	51	51	51	51	51	51	51
	90	48	48	48	48	48	48	48	48	48	48	48	48	48
Zones 2e, 2r, & 3	0	118	118	118	113	108	104	100	93	87	80	73	67	63
	10	107	107	107	107	107	104	100	93	87	80	73	67	63
	20	92	92	92	92	92	92	91	89	87	80	73	67	63
	30	79	79	79	79	79	79	79	79	77	76	73	67	63
	40	70	70	70	70	70	70	70	70	70	69	68	67	63
	50	63	63	63	63	63	63	63	63	63	63	63	62	62
	60	58	58	58	58	58	58	58	58	58	58	58	58	58
	70	54	54	54	54	54	54	54	54	54	54	54	54	54
	80	51	51	51	51	51	51	51	51	51	51	51	51	51
	90	48	48	48	48	48	48	48	48	48	48	48	48	48

Notes:

1. Tables are based on critical rail span for load combinations as specified in chapter 2 of the ASCE 7-16 and allowable design loads per the 2015 Aluminum Design Manual.
2. Panels are assumed to be in landscape orientation with a maximum width of 42"

Structural ENGINUITY INC
Ingenuity in Engineering

SUNMODO®

Max Rail Spans for SunModo SMR100 System

Table 116b

Mean Roof Height: h ≤ 15 ft
Roof Angle: 20 < θ ≤ 27 degrees
Exposure Category: C

Panel Orientation: Landscape
North/South Support γ_E = 1.5
Roof Type : Hip

Roof Wind Zone	Ground Snow Load (psf)	Wind Speed (mph)												
		90	95	100	105	110	115	120	130	140	150	160	170	180
Zone 1	0	118	118	116	111	106	102	98	91	85	77	70	65	62
	10	107	107	107	107	106	102	98	91	85	77	70	65	62
	20	92	92	92	92	92	92	91	89	85	77	70	65	62
	30	79	79	79	79	79	79	79	79	77	76	70	65	62
	40	70	70	70	70	70	70	70	70	70	69	68	65	62
	50	63	63	63	63	63	63	63	63	63	63	63	62	62
	60	58	58	58	58	58	58	58	58	58	58	58	58	58
	70	54	54	54	54	54	54	54	54	54	54	54	54	54
	80	51	51	51	51	51	51	51	51	51	51	51	51	51
	90	48	48	48	48	48	48	48	48	48	48	48	48	48
Zones 2e, 2r, & 3	0	108	103	98	94	90	87	82	73	67	62	58	54	51
	10	107	103	98	94	90	87	82	73	67	62	58	54	51
	20	92	92	92	92	90	87	82	73	67	62	58	54	51
	30	79	79	79	79	79	79	79	73	67	62	58	54	51
	40	70	70	70	70	70	70	70	70	67	62	58	54	51
	50	63	63	63	63	63	63	63	63	63	62	58	54	51
	60	58	58	58	58	58	58	58	58	58	58	58	54	51
	70	54	54	54	54	54	54	54	54	54	54	54	54	51
	80	51	51	51	51	51	51	51	51	51	51	51	51	51
	90	48	48	48	48	48	48	48	48	48	48	48	48	48

Notes:

1. Tables are based on critical rail span for load combinations as specified in chapter 2 of the ASCE 7-16 and allowable design loads per the 2015 Aluminum Design Manual.
2. Panels are assumed to be in landscape orientation with a maximum width of 42"

Structural ENGINUITY INC
Ingenuity in Engineering

SUNMODO®

Max Rail Spans for SunModo SMR100 System

Table 117a

Mean Roof Height: h ≤ 15 ft
Roof Angle: 20 < θ ≤ 27 degrees
Exposure Category: D

Panel Orientation: Landscape
North/South Support γ_E = 1
Roof Type : Hip

Roof Wind Zone	Ground Snow Load (psf)	Wind Speed (mph)												
		90	95	100	105	110	115	120	130	140	150	160	170	180
Zone 1	0	118	118	118	118	117	112	108	100	94	89	82	75	69
	10	107	107	107	107	107	106	104	100	94	89	82	75	69
	20	92	92	92	92	91	90	89	86	84	82	80	75	69
	30	79	79	79	79	79	79	78	77	75	74	72	70	69
	40	70	70	70	70	70	70	70	70	69	68	66	65	64
	50	63	63	63	63	63	63	63	63	63	63	62	61	60
	60	58	58	58	58	58	58	58	58	58	58	58	57	57
	70	54	54	54	54	54	54	54	54	54	54	54	54	54
	80	51	51	51	51	51	51	51	51	51	51	51	51	51
	90	48	48	48	48	48	48	48	48	48	48	48	48	48
Zones 2e, 2r, & 3	0	118	113	108	103	99	95	92	85	77	70	65	61	57
	10	107	107	107	103	99	95	92	85	77	70	65	61	57
	20	92	92	92	92	91	90	89	85	77	70	65	61	57
	30	79	79	79	79	79	79	78	77	75	70	65	61	57
	40	70	70	70	70	70	70	70	70	69	68	65	61	57
	50	63	63	63	63	63	63	63	63	63	63	62	61	57
	60	58	58	58	58	58	58	58	58	58	58	58	57	57
	70	54	54	54	54	54	54	54	54	54	54	54	54	54
	80	51	51	51	51	51	51	51	51	51	51	51	51	51
	90	48	48	48	48	48	48	48	48	48	48	48	48	48

Notes:

1. Tables are based on critical rail span for load combinations as specified in chapter 2 of the ASCE 7-16 and allowable design loads per the 2015 Aluminum Design Manual.
2. Panels are assumed to be in landscape orientation with a maximum width of 42"

Structural ENGINUITY INC
Ingenuity in Engineering

SUNMODO®

Max Rail Spans for SunModo SMR100 System

Table 117b

Mean Roof Height: h ≤ 15 ft
Roof Angle: 20 < θ ≤ 27 degrees
Exposure Category: D

Panel Orientation: Landscape
North/South Support γ_E = 1.5
Roof Type : Hip

Roof Wind Zone	Ground Snow Load (psf)	Wind Speed (mph)												
		90	95	100	105	110	115	120	130	140	150	160	170	180
Zone 1	0	117	111	106	101	97	94	90	82	74	67	63	59	56
	10	107	107	106	101	97	94	90	82	74	67	63	59	56
	20	92	92	92	92	91	90	89	82	74	67	63	59	56
	30	79	79	79	79	79	79	78	77	74	67	63	59	56
	40	70	70	70	70	70	70	70	70	69	67	63	59	56
	50	63	63	63	63	63	63	63	63	63	63	62	59	56
	60	58	58	58	58	58	58	58	58	58	58	58	57	56
	70	54	54	54	54	54	54	54	54	54	54	54	54	54
	80	51	51	51	51	51	51	51	51	51	51	51	51	51
	90	48	48	48	48	48	48	48	48	48	48	48	48	48
Zones 2e, 2r, & 3	0	99	94	90	86	81	76	72	65	60	56	52	49	46
	10	99	94	90	86	81	76	72	65	60	56	52	49	46
	20	92	92	90	86	81	76	72	65	60	56	52	49	46
	30	79	79	79	79	79	76	72	65	60	56	52	49	46
	40	70	70	70	70	70	70	70	65	60	56	52	49	46
	50	63	63	63	63	63	63	63	63	60	56	52	49	46
	60	58	58	58	58	58	58	58	58	58	56	52	49	46
	70	54	54	54	54	54	54	54	54	54	54	52	49	46
	80	51	51	51	51	51	51	51	51	51	51	51	49	46
	90	48	48	48	48	48	48	48	48	48	48	48	48	46

Notes:

1. Tables are based on critical rail span for load combinations as specified in chapter 2 of the ASCE 7-16 and allowable design loads per the 2015 Aluminum Design Manual.
2. Panels are assumed to be in landscape orientation with a maximum width of 42"

Structural ENGINUITY INC
Ingenuity in Engineering

SUNMODO®

Max Rail Spans for SunModo SMR100 System

Table 118a

Mean Roof Height: h ≤ 15 ft
Roof Angle: 27 < θ ≤ 45 degrees
Exposure Category: B

Panel Orientation: Landscape
North/South Support γ_E = 1
Roof Type : Hip

Roof Wind Zone	Ground Snow Load (psf)	Wind Speed (mph)												
		90	95	100	105	110	115	120	130	140	150	160	170	180
Zone 1	0	118	118	118	118	118	118	118	118	117	110	104	98	94
	10	107	107	107	107	107	107	107	107	107	107	104	98	94
	20	93	93	93	93	93	93	93	93	93	92	91	89	88
	30	81	81	81	81	81	81	81	81	81	81	81	80	79
	40	72	72	72	72	72	72	72	72	72	72	72	72	72
	50	66	66	66	66	66	66	66	66	66	66	66	66	66
	60	61	61	61	61	61	61	61	61	61	61	61	61	61
	70	57	57	57	57	57	57	57	57	57	57	57	57	57
	80	53	53	53	53	53	53	53	53	53	53	53	53	53
	90	51	51	51	51	51	51	51	51	51	51	51	51	51
Zone 2e	0	118	118	118	118	118	118	118	118	111	104	98	93	88
	10	107	107	107	107	107	107	107	107	107	104	98	93	88
	20	93	93	93	93	93	93	93	93	93	92	91	89	88
	30	81	81	81	81	81	81	81	81	81	81	81	80	79
	40	72	72	72	72	72	72	72	72	72	72	72	72	72
	50	66	66	66	66	66	66	66	66	66	66	66	66	66
	60	61	61	61	61	61	61	61	61	61	61	61	61	61
	70	57	57	57	57	57	57	57	57	57	57	57	57	57
	80	53	53	53	53	53	53	53	53	53	53	53	53	53
	90	51	51	51	51	51	51	51	51	51	51	51	51	51
Zone 2r	0	118	118	118	118	118	118	113	105	98	92	87	82	75
	10	107	107	107	107	107	107	107	105	98	92	87	82	75
	20	93	93	93	93	93	93	93	93	93	92	87	82	75
	30	81	81	81	81	81	81	81	81	81	81	81	80	75
	40	72	72	72	72	72	72	72	72	72	72	72	72	72
	50	66	66	66	66	66	66	66	66	66	66	66	66	66
	60	61	61	61	61	61	61	61	61	61	61	61	61	61
	70	57	57	57	57	57	57	57	57	57	57	57	57	57
	80	53	53	53	53	53	53	53	53	53	53	53	53	53
	90	51	51	51	51	51	51	51	51	51	51	51	51	51
Zone 3	0	118	118	118	118	118	118	113	104	97	91	86	79	71
	10	107	107	107	107	107	107	107	104	97	91	86	79	71
	20	93	93	93	93	93	93	93	93	93	91	86	79	71
	30	81	81	81	81	81	81	81	81	81	81	81	79	71
	40	72	72	72	72	72	72	72	72	72	72	72	72	71
	50	66	66	66	66	66	66	66	66	66	66	66	66	66
	60	61	61	61	61	61	61	61	61	61	61	61	61	61
	70	57	57	57	57	57	57	57	57	57	57	57	57	57
	80	53	53	53	53	53	53	53	53	53	53	53	53	53
	90	51	51	51	51	51	51	51	51	51	51	51	51	51

Notes:

1. Tables are based on critical rail span for load combinations as specified in chapter 2 of the ASCE 7-16 and allowable design loads per the 2015 Aluminum Design Manual.
2. Panels are assumed to be in landscape orientation with a maximum width of 42"

Structural ENGINUITY INC
Ingenuity in Engineering

SUNMODO®

Max Rail Spans for SunModo SMR100 System

Table 118b

Mean Roof Height: h ≤ 15 ft
Roof Angle: 27 < θ ≤ 45 degrees
Exposure Category: B

Panel Orientation: Landscape
North/South Support γ_E = 1.5
Roof Type : Hip

Roof Wind Zone	Ground Snow Load (psf)	Wind Speed (mph)												
		90	95	100	105	110	115	120	130	140	150	160	170	180
Zone 1	0	118	118	118	118	118	116	112	104	98	92	87	82	75
	10	107	107	107	107	107	107	107	104	98	92	87	82	75
	20	93	93	93	93	93	93	93	93	93	92	87	82	75
	30	81	81	81	81	81	81	81	81	81	81	81	80	75
	40	72	72	72	72	72	72	72	72	72	72	72	72	72
	50	66	66	66	66	66	66	66	66	66	66	66	66	66
	60	61	61	61	61	61	61	61	61	61	61	61	61	61
	70	57	57	57	57	57	57	57	57	57	57	57	57	57
	80	53	53	53	53	53	53	53	53	53	53	53	53	53
	90	51	51	51	51	51	51	51	51	51	51	51	51	51
Zone 2e	0	118	118	118	118	116	111	106	98	92	86	79	72	66
	10	107	107	107	107	107	107	106	98	92	86	79	72	66
	20	93	93	93	93	93	93	93	93	92	86	79	72	66
	30	81	81	81	81	81	81	81	81	81	81	79	72	66
	40	72	72	72	72	72	72	72	72	72	72	72	72	66
	50	66	66	66	66	66	66	66	66	66	66	66	66	66
	60	61	61	61	61	61	61	61	61	61	61	61	61	61
	70	57	57	57	57	57	57	57	57	57	57	57	57	57
	80	53	53	53	53	53	53	53	53	53	53	53	53	53
	90	51	51	51	51	51	51	51	51	51	51	51	51	51
Zone 2r	0	118	116	111	106	102	98	94	88	81	73	67	62	57
	10	107	107	107	106	102	98	94	88	81	73	67	62	57
	20	93	93	93	93	93	93	93	88	81	73	67	62	57
	30	81	81	81	81	81	81	81	81	81	73	67	62	57
	40	72	72	72	72	72	72	72	72	72	72	67	62	57
	50	66	66	66	66	66	66	66	66	66	66	66	62	57
	60	61	61	61	61	61	61	61	61	61	61	61	61	57
	70	57	57	57	57	57	57	57	57	57	57	57	57	57
	80	53	53	53	53	53	53	53	53	53	53	53	53	53
	90	51	51	51	51	51	51	51	51	51	51	51	51	51
Zone 3	0	118	117	111	105	101	97	93	86	77	69	63	58	54
	10	107	107	107	105	101	97	93	86	77	69	63	58	54
	20	93	93	93	93	93	93	93	86	77	69	63	58	54
	30	81	81	81	81	81	81	81	81	77	69	63	58	54
	40	72	72	72	72	72	72	72	72	72	69	63	58	54
	50	66	66	66	66	66	66	66	66	66	66	63	58	54
	60	61	61	61	61	61	61	61	61	61	61	61	58	54
	70	57	57	57	57	57	57	57	57	57	57	57	57	54
	80	53	53	53	53	53	53	53	53	53	53	53	53	53
	90	51	51	51	51	51	51	51	51	51	51	51	51	51

Notes:

1. Tables are based on critical rail span for load combinations as specified in chapter 2 of the ASCE 7-16 and allowable design loads per the 2015 Aluminum Design Manual.
2. Panels are assumed to be in landscape orientation with a maximum width of 42"

Structural ENGINUITY INC
Ingenuity in Engineering

SUNMODO®

Max Rail Spans for SunModo SMR100 System

Table 119a

Mean Roof Height: h ≤ 15 ft
Roof Angle: 27 < θ ≤ 45 degrees
Exposure Category: C

Panel Orientation: Landscape
North/South Support γ_E = 1
Roof Type : Hip

Roof Wind Zone	Ground Snow Load (psf)	Wind Speed (mph)												
		90	95	100	105	110	115	120	130	140	150	160	170	180
Zone 1	0	118	118	118	118	118	116	112	104	98	92	87	82	76
	10	107	107	107	107	107	107	107	104	98	92	87	82	76
	20	93	93	93	93	93	93	93	91	89	87	85	82	76
	30	81	81	81	81	81	81	81	81	80	78	77	75	74
	40	72	72	72	72	72	72	72	72	72	72	70	69	68
	50	66	66	66	66	66	66	66	66	66	66	66	65	64
	60	61	61	61	61	61	61	61	61	61	61	61	61	60
	70	57	57	57	57	57	57	57	57	57	57	57	57	57
	80	53	53	53	53	53	53	53	53	53	53	53	53	53
	90	51	51	51	51	51	51	51	51	51	51	51	51	51
Zone 2e	0	118	118	118	118	116	111	106	99	92	87	80	72	66
	10	107	107	107	107	107	107	106	99	92	87	80	72	66
	20	93	93	93	93	93	93	93	91	89	87	80	72	66
	30	81	81	81	81	81	81	81	81	80	78	77	72	66
	40	72	72	72	72	72	72	72	72	72	72	70	69	66
	50	66	66	66	66	66	66	66	66	66	66	66	65	64
	60	61	61	61	61	61	61	61	61	61	61	61	61	60
	70	57	57	57	57	57	57	57	57	57	57	57	57	57
	80	53	53	53	53	53	53	53	53	53	53	53	53	53
	90	51	51	51	51	51	51	51	51	51	51	51	51	51
Zone 2r	0	118	117	111	106	102	98	94	88	81	73	67	62	58
	10	107	107	107	106	102	98	94	88	81	73	67	62	58
	20	93	93	93	93	93	93	93	88	81	73	67	62	58
	30	81	81	81	81	81	81	81	81	80	73	67	62	58
	40	72	72	72	72	72	72	72	72	72	72	67	62	58
	50	66	66	66	66	66	66	66	66	66	66	66	62	58
	60	61	61	61	61	61	61	61	61	61	61	61	61	58
	70	57	57	57	57	57	57	57	57	57	57	57	57	57
	80	53	53	53	53	53	53	53	53	53	53	53	53	53
	90	51	51	51	51	51	51	51	51	51	51	51	51	51
Zone 3	0	118	117	111	106	101	97	93	86	78	69	63	58	54
	10	107	107	107	106	101	97	93	86	78	69	63	58	54
	20	93	93	93	93	93	93	93	86	78	69	63	58	54
	30	81	81	81	81	81	81	81	81	78	69	63	58	54
	40	72	72	72	72	72	72	72	72	72	69	63	58	54
	50	66	66	66	66	66	66	66	66	66	66	63	58	54
	60	61	61	61	61	61	61	61	61	61	61	61	58	54
	70	57	57	57	57	57	57	57	57	57	57	57	57	54
	80	53	53	53	53	53	53	53	53	53	53	53	53	53
	90	51	51	51	51	51	51	51	51	51	51	51	51	51

Notes:

1. Tables are based on critical rail span for load combinations as specified in chapter 2 of the ASCE 7-16 and allowable design loads per the 2015 Aluminum Design Manual.
2. Panels are assumed to be in landscape orientation with a maximum width of 42"

Structural ENGINUITY INC
Ingenuity in Engineering

SUNMODO®

Max Rail Spans for SunModo SMR100 System

Table 119b

Mean Roof Height: h ≤ 15 ft
Roof Angle: 27 < θ ≤ 45 degrees
Exposure Category: C

Panel Orientation: Landscape
North/South Support γ_E = 1.5
Roof Type : Hip

Roof Wind Zone	Ground Snow Load (psf)	Wind Speed (mph)												
		90	95	100	105	110	115	120	130	140	150	160	170	180
Zone 1	0	118	115	110	105	101	97	94	88	81	74	67	63	59
	10	107	107	107	105	101	97	94	88	81	74	67	63	59
	20	93	93	93	93	93	93	93	88	81	74	67	63	59
	30	81	81	81	81	81	81	81	81	80	74	67	63	59
	40	72	72	72	72	72	72	72	72	72	72	67	63	59
	50	66	66	66	66	66	66	66	66	66	66	66	63	59
	60	61	61	61	61	61	61	61	61	61	61	61	61	59
	70	57	57	57	57	57	57	57	57	57	57	57	57	57
	80	53	53	53	53	53	53	53	53	53	53	53	53	53
	90	51	51	51	51	51	51	51	51	51	51	51	51	51
Zone 2e	0	116	110	104	100	95	92	88	80	71	64	59	55	51
	10	107	107	104	100	95	92	88	80	71	64	59	55	51
	20	93	93	93	93	93	92	88	80	71	64	59	55	51
	30	81	81	81	81	81	81	81	80	71	64	59	55	51
	40	72	72	72	72	72	72	72	72	71	64	59	55	51
	50	66	66	66	66	66	66	66	66	66	64	59	55	51
	60	61	61	61	61	61	61	61	61	61	61	59	55	51
	70	57	57	57	57	57	57	57	57	57	57	57	55	51
	80	53	53	53	53	53	53	53	53	53	53	53	53	51
	90	51	51	51	51	51	51	51	51	51	51	51	51	51
Zone 2r	0	102	97	93	89	85	81	76	67	61	56	52	48	45
	10	102	97	93	89	85	81	76	67	61	56	52	48	45
	20	93	93	93	89	85	81	76	67	61	56	52	48	45
	30	81	81	81	81	81	81	76	67	61	56	52	48	45
	40	72	72	72	72	72	72	72	67	61	56	52	48	45
	50	66	66	66	66	66	66	66	66	61	56	52	48	45
	60	61	61	61	61	61	61	61	61	61	56	52	48	45
	70	57	57	57	57	57	57	57	57	57	56	52	48	45
	80	53	53	53	53	53	53	53	53	53	53	52	48	45
	90	51	51	51	51	51	51	51	51	51	51	51	48	45
Zone 3	0	101	96	91	87	83	77	72	64	58	53	49	45	35
	10	101	96	91	87	83	77	72	64	58	53	49	45	35
	20	93	93	91	87	83	77	72	64	58	53	49	45	35
	30	81	81	81	81	81	77	72	64	58	53	49	45	35
	40	72	72	72	72	72	72	72	64	58	53	49	45	35
	50	66	66	66	66	66	66	66	64	58	53	49	45	35
	60	61	61	61	61	61	61	61	61	58	53	49	45	35
	70	57	57	57	57	57	57	57	57	57	53	49	45	35
	80	53	53	53	53	53	53	53	53	53	53	49	45	35
	90	51	51	51	51	51	51	51	51	51	51	49	45	35

Notes:

1. Tables are based on critical rail span for load combinations as specified in chapter 2 of the ASCE 7-16 and allowable design loads per the 2015 Aluminum Design Manual.
2. Panels are assumed to be in landscape orientation with a maximum width of 42"

Structural ENGINUITY INC
Ingenuity in Engineering

SUNMODO®

Max Rail Spans for SunModo SMR100 System

Table 120a

Mean Roof Height: h ≤ 15 ft
Roof Angle: 27 < θ ≤ 45 degrees
Exposure Category: D

Panel Orientation: Landscape
North/South Support γ_E = 1
Roof Type : Hip

Roof Wind Zone	Ground Snow Load (psf)	Wind Speed (mph)												
		90	95	100	105	110	115	120	130	140	150	160	170	180
Zone 1	0	118	118	118	116	111	107	103	96	90	85	78	72	67
	10	107	107	107	107	107	107	103	96	90	85	78	72	67
	20	93	93	93	93	93	92	91	88	86	84	78	72	67
	30	81	81	81	81	81	81	81	79	78	76	74	72	67
	40	72	72	72	72	72	72	72	72	71	70	68	67	66
	50	66	66	66	66	66	66	66	66	66	65	64	63	62
	60	61	61	61	61	61	61	61	61	61	61	60	59	58
	70	57	57	57	57	57	57	57	57	57	57	57	56	56
	80	53	53	53	53	53	53	53	53	53	53	53	53	53
	90	51	51	51	51	51	51	51	51	51	51	51	51	51
Zone 2e	0	118	118	116	110	105	101	97	90	85	76	68	63	58
	10	107	107	107	107	105	101	97	90	85	76	68	63	58
	20	93	93	93	93	93	92	91	88	85	76	68	63	58
	30	81	81	81	81	81	81	81	79	78	76	68	63	58
	40	72	72	72	72	72	72	72	72	71	70	68	63	58
	50	66	66	66	66	66	66	66	66	66	65	64	63	58
	60	61	61	61	61	61	61	61	61	61	61	60	59	58
	70	57	57	57	57	57	57	57	57	57	57	57	56	56
	80	53	53	53	53	53	53	53	53	53	53	53	53	53
	90	51	51	51	51	51	51	51	51	51	51	51	51	51
Zone 2r	0	112	107	102	97	94	90	87	79	70	64	59	55	51
	10	107	107	102	97	94	90	87	79	70	64	59	55	51
	20	93	93	93	93	93	90	87	79	70	64	59	55	51
	30	81	81	81	81	81	81	81	79	70	64	59	55	51
	40	72	72	72	72	72	72	72	72	70	64	59	55	51
	50	66	66	66	66	66	66	66	66	66	64	59	55	51
	60	61	61	61	61	61	61	61	61	61	61	59	55	51
	70	57	57	57	57	57	57	57	57	57	57	57	55	51
	80	53	53	53	53	53	53	53	53	53	53	53	53	51
	90	51	51	51	51	51	51	51	51	51	51	51	51	51
Zone 3	0	112	106	101	96	92	89	85	75	67	61	56	52	48
	10	107	106	101	96	92	89	85	75	67	61	56	52	48
	20	93	93	93	93	92	89	85	75	67	61	56	52	48
	30	81	81	81	81	81	81	81	75	67	61	56	52	48
	40	72	72	72	72	72	72	72	72	67	61	56	52	48
	50	66	66	66	66	66	66	66	66	66	61	56	52	48
	60	61	61	61	61	61	61	61	61	61	61	56	52	48
	70	57	57	57	57	57	57	57	57	57	57	56	52	48
	80	53	53	53	53	53	53	53	53	53	53	53	52	48
	90	51	51	51	51	51	51	51	51	51	51	51	51	48

Notes:

1. Tables are based on critical rail span for load combinations as specified in chapter 2 of the ASCE 7-16 and allowable design loads per the 2015 Aluminum Design Manual.
2. Panels are assumed to be in landscape orientation with a maximum width of 42"

Structural ENGINUITY INC
Ingenuity in Engineering

SUNMODO®

Max Rail Spans for SunModo SMR100 System

Table 120b

Mean Roof Height: h ≤ 15 ft
Roof Angle: 27 < θ ≤ 45 degrees
Exposure Category: D

Panel Orientation: Landscape
North/South Support γ_E = 1.5
Roof Type : Hip

Roof Wind Zone	Ground Snow Load (psf)	Wind Speed (mph)												
		90	95	100	105	110	115	120	130	140	150	160	170	180
Zone 1	0	111	106	101	97	93	90	87	79	71	65	61	57	53
	10	107	106	101	97	93	90	87	79	71	65	61	57	53
	20	93	93	93	93	93	90	87	79	71	65	61	57	53
	30	81	81	81	81	81	81	81	79	71	65	61	57	53
	40	72	72	72	72	72	72	72	72	71	65	61	57	53
	50	66	66	66	66	66	66	66	66	66	65	61	57	53
	60	61	61	61	61	61	61	61	61	61	61	60	57	53
	70	57	57	57	57	57	57	57	57	57	57	57	56	53
	80	53	53	53	53	53	53	53	53	53	53	53	53	53
	90	51	51	51	51	51	51	51	51	51	51	51	51	51
Zone 2e	0	105	100	95	91	87	84	78	69	62	57	52	49	45
	10	105	100	95	91	87	84	78	69	62	57	52	49	45
	20	93	93	93	91	87	84	78	69	62	57	52	49	45
	30	81	81	81	81	81	81	78	69	62	57	52	49	45
	40	72	72	72	72	72	72	72	69	62	57	52	49	45
	50	66	66	66	66	66	66	66	66	62	57	52	49	45
	60	61	61	61	61	61	61	61	61	61	57	52	49	45
	70	57	57	57	57	57	57	57	57	57	57	52	49	45
	80	53	53	53	53	53	53	53	53	53	53	52	49	45
	90	51	51	51	51	51	51	51	51	51	51	51	49	45
Zone 2r	0	93	89	85	80	74	70	66	60	54	50	46	43	40
	10	93	89	85	80	74	70	66	60	54	50	46	43	40
	20	93	89	85	80	74	70	66	60	54	50	46	43	40
	30	81	81	81	80	74	70	66	60	54	50	46	43	40
	40	72	72	72	72	72	70	66	60	54	50	46	43	40
	50	66	66	66	66	66	66	66	60	54	50	46	43	40
	60	61	61	61	61	61	61	61	60	54	50	46	43	40
	70	57	57	57	57	57	57	57	57	54	50	46	43	40
	80	53	53	53	53	53	53	53	53	53	50	46	43	40
	90	51	51	51	51	51	51	51	51	51	50	46	43	40
Zone 3	0	92	88	83	76	71	66	62	56	51	47	43	33	31
	10	92	88	83	76	71	66	62	56	51	47	43	33	31
	20	92	88	83	76	71	66	62	56	51	47	43	33	31
	30	81	81	81	76	71	66	62	56	51	47	43	33	31
	40	72	72	72	72	71	66	62	56	51	47	43	33	31
	50	66	66	66	66	66	66	62	56	51	47	43	33	31
	60	61	61	61	61	61	61	61	56	51	47	43	33	31
	70	57	57	57	57	57	57	57	56	51	47	43	33	31
	80	53	53	53	53	53	53	53	53	51	47	43	33	31
	90	51	51	51	51	51	51	51	51	51	47	43	33	31

Notes:

1. Tables are based on critical rail span for load combinations as specified in chapter 2 of the ASCE 7-16 and allowable design loads per the 2015 Aluminum Design Manual.
2. Panels are assumed to be in landscape orientation with a maximum width of 42"

Structural ENGINUITY INC
Ingenuity in Engineering

SUNMODO®

Max Rail Spans for SunModo SMR100 System

Table 121a

Mean Roof Height: 15 < h ≤ 30 ft
Roof Angle: 0 < θ ≤ 7 degrees
Exposure Category: B

Panel Orientation: Landscape
North/South Support γ_E = 1
Roof Type : Gable

Roof Wind Zone	Ground Snow Load (psf)	Wind Speed (mph)												
		90	95	100	105	110	115	120	130	140	150	160	170	180
Zone 1'	0	118	118	118	118	118	118	118	118	118	118	117	111	105
	10	108	108	108	108	108	108	108	108	108	108	108	108	105
	20	88	88	88	88	88	88	88	88	88	88	88	88	88
	30	86	86	86	86	86	86	86	86	86	86	86	86	86
	40	76	76	76	76	76	76	76	76	76	76	76	76	76
	50	69	69	69	69	69	69	69	69	69	69	69	69	69
	60	63	63	63	63	63	63	63	63	63	63	63	63	63
	70	59	59	59	59	59	59	59	59	59	59	59	59	59
	80	55	55	55	55	55	55	55	55	55	55	55	55	55
	90	52	52	52	52	52	52	52	52	52	52	52	52	52
Zone 1	0	118	118	118	118	118	118	116	108	101	96	90	83	77
	10	108	108	108	108	108	108	108	108	101	96	90	83	77
	20	88	88	88	88	88	88	88	88	88	88	88	83	77
	30	86	86	86	86	86	86	86	86	86	86	86	83	77
	40	76	76	76	76	76	76	76	76	76	76	76	76	76
	50	69	69	69	69	69	69	69	69	69	69	69	69	69
	60	63	63	63	63	63	63	63	63	63	63	63	63	63
	70	59	59	59	59	59	59	59	59	59	59	59	59	59
	80	55	55	55	55	55	55	55	55	55	55	55	55	55
	90	52	52	52	52	52	52	52	52	52	52	52	52	52
Zone 2	0	118	118	118	114	110	105	102	95	88	80	74	68	64
	10	108	108	108	108	108	105	102	95	88	80	74	68	64
	20	88	88	88	88	88	88	88	88	88	80	74	68	64
	30	86	86	86	86	86	86	86	86	86	80	74	68	64
	40	76	76	76	76	76	76	76	76	76	76	74	68	64
	50	69	69	69	69	69	69	69	69	69	69	69	68	64
	60	63	63	63	63	63	63	63	63	63	63	63	63	63
	70	59	59	59	59	59	59	59	59	59	59	59	59	59
	80	55	55	55	55	55	55	55	55	55	55	55	55	55
	90	52	52	52	52	52	52	52	52	52	52	52	52	52
Zone 3	0	114	109	104	100	96	92	87	78	71	66	61	57	54
	10	108	108	104	100	96	92	87	78	71	66	61	57	54
	20	88	88	88	88	88	88	87	78	71	66	61	57	54
	30	86	86	86	86	86	86	86	78	71	66	61	57	54
	40	76	76	76	76	76	76	76	76	71	66	61	57	54
	50	69	69	69	69	69	69	69	69	69	66	61	57	54
	60	63	63	63	63	63	63	63	63	63	63	61	57	54
	70	59	59	59	59	59	59	59	59	59	59	59	57	54
	80	55	55	55	55	55	55	55	55	55	55	55	55	54
	90	52	52	52	52	52	52	52	52	52	52	52	52	52

Notes:

1. Tables are based on critical rail span for load combinations as specified in chapter 2 of the ASCE 7-16 and allowable design loads per the 2015 Aluminum Design Manual.
2. Panels are assumed to be in landscape orientation with a maximum width of 42"

Structural ENGINUITY INC
Ingenuity in Engineering

SUNMODO®

Max Rail Spans for SunModo SMR100 System

Table 121b

Mean Roof Height: 15 < h ≤ 30 ft
Roof Angle: 0 < θ ≤ 7 degrees
Exposure Category: B

Panel Orientation: Landscape
North/South Support γ_E = 1.5
Roof Type : Gable

Roof Wind Zone	Ground Snow Load (psf)	Wind Speed (mph)												
		90	95	100	105	110	115	120	130	140	150	160	170	180
Zone 1'	0	118	118	118	118	118	118	118	117	110	103	98	93	88
	10	108	108	108	108	108	108	108	108	108	103	98	93	88
	20	88	88	88	88	88	88	88	88	88	88	88	88	88
	30	86	86	86	86	86	86	86	86	86	86	86	86	86
	40	76	76	76	76	76	76	76	76	76	76	76	76	76
	50	69	69	69	69	69	69	69	69	69	69	69	69	69
	60	63	63	63	63	63	63	63	63	63	63	63	63	63
	70	59	59	59	59	59	59	59	59	59	59	59	59	59
	80	55	55	55	55	55	55	55	55	55	55	55	55	55
	90	52	52	52	52	52	52	52	52	52	52	52	52	52
Zone 1	0	118	118	114	109	105	101	97	91	82	75	69	65	61
	10	108	108	108	108	105	101	97	91	82	75	69	65	61
	20	88	88	88	88	88	88	88	88	82	75	69	65	61
	30	86	86	86	86	86	86	86	86	82	75	69	65	61
	40	76	76	76	76	76	76	76	76	76	75	69	65	61
	50	69	69	69	69	69	69	69	69	69	69	69	65	61
	60	63	63	63	63	63	63	63	63	63	63	63	63	61
	70	59	59	59	59	59	59	59	59	59	59	59	59	59
	80	55	55	55	55	55	55	55	55	55	55	55	55	55
	90	52	52	52	52	52	52	52	52	52	52	52	52	52
Zone 2	0	109	104	100	96	92	87	83	74	68	63	59	55	52
	10	108	104	100	96	92	87	83	74	68	63	59	55	52
	20	88	88	88	88	88	87	83	74	68	63	59	55	52
	30	86	86	86	86	86	86	83	74	68	63	59	55	52
	40	76	76	76	76	76	76	76	74	68	63	59	55	52
	50	69	69	69	69	69	69	69	69	68	63	59	55	52
	60	63	63	63	63	63	63	63	63	63	63	59	55	52
	70	59	59	59	59	59	59	59	59	59	59	59	55	52
	80	55	55	55	55	55	55	55	55	55	55	55	55	52
	90	52	52	52	52	52	52	52	52	52	52	52	52	52
Zone 3	0	95	91	85	80	75	70	67	62	57	53	50	47	44
	10	95	91	85	80	75	70	67	62	57	53	50	47	44
	20	88	88	85	80	75	70	67	62	57	53	50	47	44
	30	86	86	85	80	75	70	67	62	57	53	50	47	44
	40	76	76	76	76	75	70	67	62	57	53	50	47	44
	50	69	69	69	69	69	69	67	62	57	53	50	47	44
	60	63	63	63	63	63	63	63	62	57	53	50	47	44
	70	59	59	59	59	59	59	59	59	57	53	50	47	44
	80	55	55	55	55	55	55	55	55	55	53	50	47	44
	90	52	52	52	52	52	52	52	52	52	52	50	47	44

Notes:

1. Tables are based on critical rail span for load combinations as specified in chapter 2 of the ASCE 7-16 and allowable design loads per the 2015 Aluminum Design Manual.
2. Panels are assumed to be in landscape orientation with a maximum width of 42"

Structural ENGINUITY INC
Ingenuity in Engineering

SUNMODO®

Max Rail Spans for SunModo SMR100 System

Table 122a

Mean Roof Height: 15 < h ≤ 30 ft
Roof Angle: 0 < θ ≤ 7 degrees
Exposure Category: C

Panel Orientation: Landscape
North/South Support γ_E = 1
Roof Type : Gable

Roof Wind Zone	Ground Snow Load (psf)	Wind Speed (mph)												
		90	95	100	105	110	115	120	130	140	150	160	170	180
Zone 1'	0	118	118	118	118	118	118	118	118	113	107	101	96	92
	10	108	108	108	108	108	108	108	108	108	107	101	96	92
	20	88	88	88	88	88	88	88	88	88	88	88	87	86
	30	86	86	86	86	86	86	86	86	86	86	86	86	85
	40	76	76	76	76	76	76	76	76	76	76	76	76	76
	50	69	69	69	69	69	69	69	69	69	69	69	69	69
	60	63	63	63	63	63	63	63	63	63	63	63	63	63
	70	59	59	59	59	59	59	59	59	59	59	59	59	59
	80	55	55	55	55	55	55	55	55	55	55	55	55	55
	90	52	52	52	52	52	52	52	52	52	52	52	52	52
Zone 1	0	118	118	118	113	108	104	100	94	86	79	72	67	63
	10	108	108	108	108	108	104	100	94	86	79	72	67	63
	20	88	88	88	88	88	88	88	88	86	79	72	67	63
	30	86	86	86	86	86	86	86	86	86	79	72	67	63
	40	76	76	76	76	76	76	76	76	76	76	72	67	63
	50	69	69	69	69	69	69	69	69	69	69	69	67	63
	60	63	63	63	63	63	63	63	63	63	63	63	63	63
	70	59	59	59	59	59	59	59	59	59	59	59	59	59
	80	55	55	55	55	55	55	55	55	55	55	55	55	55
	90	52	52	52	52	52	52	52	52	52	52	52	52	52
Zone 2	0	113	108	103	99	95	91	86	78	71	65	61	57	54
	10	108	108	103	99	95	91	86	78	71	65	61	57	54
	20	88	88	88	88	88	88	86	78	71	65	61	57	54
	30	86	86	86	86	86	86	86	78	71	65	61	57	54
	40	76	76	76	76	76	76	76	76	71	65	61	57	54
	50	69	69	69	69	69	69	69	69	69	65	61	57	54
	60	63	63	63	63	63	63	63	63	63	63	61	57	54
	70	59	59	59	59	59	59	59	59	59	59	59	57	54
	80	55	55	55	55	55	55	55	55	55	55	55	55	54
	90	52	52	52	52	52	52	52	52	52	52	52	52	52
Zone 3	0	98	94	89	83	78	74	70	64	59	55	51	48	45
	10	98	94	89	83	78	74	70	64	59	55	51	48	45
	20	88	88	88	83	78	74	70	64	59	55	51	48	45
	30	86	86	86	83	78	74	70	64	59	55	51	48	45
	40	76	76	76	76	76	74	70	64	59	55	51	48	45
	50	69	69	69	69	69	69	69	64	59	55	51	48	45
	60	63	63	63	63	63	63	63	63	59	55	51	48	45
	70	59	59	59	59	59	59	59	59	59	55	51	48	45
	80	55	55	55	55	55	55	55	55	55	55	51	48	45
	90	52	52	52	52	52	52	52	52	52	52	51	48	45

Notes:

1. Tables are based on critical rail span for load combinations as specified in chapter 2 of the ASCE 7-16 and allowable design loads per the 2015 Aluminum Design Manual.
2. Panels are assumed to be in landscape orientation with a maximum width of 42"

Structural ENGINUITY INC
Ingenuity in Engineering

SUNMODO®

Max Rail Spans for SunModo SMR100 System

Table 122b

Mean Roof Height: 15 < h ≤ 30 ft
Roof Angle: 0 < θ ≤ 7 degrees
Exposure Category: C

Panel Orientation: Landscape
North/South Support γ_E = 1.5
Roof Type : Gable

Roof Wind Zone	Ground Snow Load (psf)	Wind Speed (mph)												
		90	95	100	105	110	115	120	130	140	150	160	170	180
Zone 1'	0	118	118	118	118	117	112	108	101	95	90	83	77	72
	10	108	108	108	108	108	108	108	101	95	90	83	77	72
	20	88	88	88	88	88	88	88	88	88	88	83	77	72
	30	86	86	86	86	86	86	86	86	86	86	83	77	72
	40	76	76	76	76	76	76	76	76	76	76	76	76	72
	50	69	69	69	69	69	69	69	69	69	69	69	69	69
	60	63	63	63	63	63	63	63	63	63	63	63	63	63
	70	59	59	59	59	59	59	59	59	59	59	59	59	59
	80	55	55	55	55	55	55	55	55	55	55	55	55	55
	90	52	52	52	52	52	52	52	52	52	52	52	52	52
Zone 1	0	108	103	98	94	91	85	81	73	67	62	58	54	51
	10	108	103	98	94	91	85	81	73	67	62	58	54	51
	20	88	88	88	88	88	85	81	73	67	62	58	54	51
	30	86	86	86	86	86	85	81	73	67	62	58	54	51
	40	76	76	76	76	76	76	76	73	67	62	58	54	51
	50	69	69	69	69	69	69	69	69	67	62	58	54	51
	60	63	63	63	63	63	63	63	63	63	62	58	54	51
	70	59	59	59	59	59	59	59	59	59	59	58	54	51
	80	55	55	55	55	55	55	55	55	55	55	55	54	51
	90	52	52	52	52	52	52	52	52	52	52	52	52	51
Zone 2	0	95	90	84	79	74	70	67	61	57	53	49	46	44
	10	95	90	84	79	74	70	67	61	57	53	49	46	44
	20	88	88	84	79	74	70	67	61	57	53	49	46	44
	30	86	86	84	79	74	70	67	61	57	53	49	46	44
	40	76	76	76	76	74	70	67	61	57	53	49	46	44
	50	69	69	69	69	69	69	67	61	57	53	49	46	44
	60	63	63	63	63	63	63	63	61	57	53	49	46	44
	70	59	59	59	59	59	59	59	59	57	53	49	46	44
	80	55	55	55	55	55	55	55	55	55	53	49	46	44
	90	52	52	52	52	52	52	52	52	52	52	49	46	44
Zone 3	0	78	73	68	65	61	59	56	52	48	44	42	39	37
	10	78	73	68	65	61	59	56	52	48	44	42	39	37
	20	78	73	68	65	61	59	56	52	48	44	42	39	37
	30	78	73	68	65	61	59	56	52	48	44	42	39	37
	40	76	73	68	65	61	59	56	52	48	44	42	39	37
	50	69	69	68	65	61	59	56	52	48	44	42	39	37
	60	63	63	63	63	61	59	56	52	48	44	42	39	37
	70	59	59	59	59	59	59	56	52	48	44	42	39	37
	80	55	55	55	55	55	55	55	52	48	44	42	39	37
	90	52	52	52	52	52	52	52	52	48	44	42	39	37

Notes:

1. Tables are based on critical rail span for load combinations as specified in chapter 2 of the ASCE 7-16 and allowable design loads per the 2015 Aluminum Design Manual.
2. Panels are assumed to be in landscape orientation with a maximum width of 42"

Structural ENGINUITY INC
Ingenuity in Engineering

SUNMODO®

Max Rail Spans for SunModo SMR100 System

Table 123a

Mean Roof Height: 15 < h ≤ 30 ft
Roof Angle: 0 < θ ≤ 7 degrees
Exposure Category: D

Panel Orientation: Landscape
North/South Support γ_E = 1
Roof Type : Gable

Roof Wind Zone	Ground Snow Load (psf)	Wind Speed (mph)												
		90	95	100	105	110	115	120	130	140	150	160	170	180
Zone 1'	0	118	118	118	118	118	118	118	112	105	99	94	89	83
	10	108	108	108	108	108	108	108	108	105	99	94	89	83
	20	88	88	88	88	88	88	88	88	88	88	87	86	83
	30	86	86	86	86	86	86	86	86	86	86	86	84	83
	40	76	76	76	76	76	76	76	76	76	76	76	76	76
	50	69	69	69	69	69	69	69	69	69	69	69	69	69
	60	63	63	63	63	63	63	63	63	63	63	63	63	63
	70	59	59	59	59	59	59	59	59	59	59	59	59	59
	80	55	55	55	55	55	55	55	55	55	55	55	55	55
	90	52	52	52	52	52	52	52	52	52	52	52	52	52
Zone 1	0	118	114	109	105	100	97	93	85	77	71	65	61	58
	10	108	108	108	105	100	97	93	85	77	71	65	61	58
	20	88	88	88	88	88	88	88	85	77	71	65	61	58
	30	86	86	86	86	86	86	86	85	77	71	65	61	58
	40	76	76	76	76	76	76	76	76	76	71	65	61	58
	50	69	69	69	69	69	69	69	69	69	69	65	61	58
	60	63	63	63	63	63	63	63	63	63	63	63	61	58
	70	59	59	59	59	59	59	59	59	59	59	59	59	58
	80	55	55	55	55	55	55	55	55	55	55	55	55	55
	90	52	52	52	52	52	52	52	52	52	52	52	52	52
Zone 2	0	105	100	96	92	87	82	77	70	64	60	56	52	49
	10	105	100	96	92	87	82	77	70	64	60	56	52	49
	20	88	88	88	88	87	82	77	70	64	60	56	52	49
	30	86	86	86	86	86	82	77	70	64	60	56	52	49
	40	76	76	76	76	76	76	76	70	64	60	56	52	49
	50	69	69	69	69	69	69	69	69	64	60	56	52	49
	60	63	63	63	63	63	63	63	63	63	60	56	52	49
	70	59	59	59	59	59	59	59	59	59	59	56	52	49
	80	55	55	55	55	55	55	55	55	55	55	55	52	49
	90	52	52	52	52	52	52	52	52	52	52	52	52	49
Zone 3	0	91	85	79	74	70	66	64	58	54	50	47	44	42
	10	91	85	79	74	70	66	64	58	54	50	47	44	42
	20	88	85	79	74	70	66	64	58	54	50	47	44	42
	30	86	85	79	74	70	66	64	58	54	50	47	44	42
	40	76	76	76	74	70	66	64	58	54	50	47	44	42
	50	69	69	69	69	69	66	64	58	54	50	47	44	42
	60	63	63	63	63	63	63	63	58	54	50	47	44	42
	70	59	59	59	59	59	59	59	58	54	50	47	44	42
	80	55	55	55	55	55	55	55	55	54	50	47	44	42
	90	52	52	52	52	52	52	52	52	52	50	47	44	42

Notes:

1. Tables are based on critical rail span for load combinations as specified in chapter 2 of the ASCE 7-16 and allowable design loads per the 2015 Aluminum Design Manual.
2. Panels are assumed to be in landscape orientation with a maximum width of 42"

Structural ENGINUITY INC
Ingenuity in Engineering

SUNMODO®

Max Rail Spans for SunModo SMR100 System

Table 123b

Mean Roof Height: 15 < h ≤ 30 ft
Roof Angle: 0 < θ ≤ 7 degrees
Exposure Category: D

Panel Orientation: Landscape
North/South Support γ_E = 1.5
Roof Type : Gable

Roof Wind Zone	Ground Snow Load (psf)	Wind Speed (mph)												
		90	95	100	105	110	115	120	130	140	150	160	170	180
Zone 1'	0	118	118	118	113	109	105	101	95	88	81	75	70	65
	10	108	108	108	108	108	105	101	95	88	81	75	70	65
	20	88	88	88	88	88	88	88	88	88	81	75	70	65
	30	86	86	86	86	86	86	86	86	86	81	75	70	65
	40	76	76	76	76	76	76	76	76	76	76	75	70	65
	50	69	69	69	69	69	69	69	69	69	69	69	69	65
	60	63	63	63	63	63	63	63	63	63	63	63	63	63
	70	59	59	59	59	59	59	59	59	59	59	59	59	59
	80	55	55	55	55	55	55	55	55	55	55	55	55	55
	90	52	52	52	52	52	52	52	52	52	52	52	52	52
Zone 1	0	100	96	92	86	81	76	72	66	61	57	53	50	47
	10	100	96	92	86	81	76	72	66	61	57	53	50	47
	20	88	88	88	86	81	76	72	66	61	57	53	50	47
	30	86	86	86	86	81	76	72	66	61	57	53	50	47
	40	76	76	76	76	76	76	72	66	61	57	53	50	47
	50	69	69	69	69	69	69	69	66	61	57	53	50	47
	60	63	63	63	63	63	63	63	63	61	57	53	50	47
	70	59	59	59	59	59	59	59	59	59	57	53	50	47
	80	55	55	55	55	55	55	55	55	55	55	53	50	47
	90	52	52	52	52	52	52	52	52	52	52	52	50	47
Zone 2	0	86	81	75	71	67	64	61	56	52	48	45	43	40
	10	86	81	75	71	67	64	61	56	52	48	45	43	40
	20	86	81	75	71	67	64	61	56	52	48	45	43	40
	30	86	81	75	71	67	64	61	56	52	48	45	43	40
	40	76	76	75	71	67	64	61	56	52	48	45	43	40
	50	69	69	69	69	67	64	61	56	52	48	45	43	40
	60	63	63	63	63	63	63	61	56	52	48	45	43	40
	70	59	59	59	59	59	59	59	56	52	48	45	43	40
	80	55	55	55	55	55	55	55	55	52	48	45	43	40
	90	52	52	52	52	52	52	52	52	52	48	45	43	40
Zone 3	0	70	66	62	59	56	54	51	47	44	41	38	36	34
	10	70	66	62	59	56	54	51	47	44	41	38	36	34
	20	70	66	62	59	56	54	51	47	44	41	38	36	34
	30	70	66	62	59	56	54	51	47	44	41	38	36	34
	40	70	66	62	59	56	54	51	47	44	41	38	36	34
	50	69	66	62	59	56	54	51	47	44	41	38	36	34
	60	63	63	62	59	56	54	51	47	44	41	38	36	34
	70	59	59	59	59	56	54	51	47	44	41	38	36	34
	80	55	55	55	55	55	54	51	47	44	41	38	36	34
	90	52	52	52	52	52	52	51	47	44	41	38	36	34

Notes:

1. Tables are based on critical rail span for load combinations as specified in chapter 2 of the ASCE 7-16 and allowable design loads per the 2015 Aluminum Design Manual.
2. Panels are assumed to be in landscape orientation with a maximum width of 42"

Structural ENGINUITY INC
Ingenuity in Engineering

SUNMODO®

Max Rail Spans for SunModo SMR100 System

Table 124a

Mean Roof Height: 15 < h ≤ 30 ft
Roof Angle: 7 < θ ≤ 20 degrees
Exposure Category: B

Panel Orientation: Landscape
North/South Support γ_E = 1
Roof Type : Gable

Roof Wind Zone	Ground Snow Load (psf)	Wind Speed (mph)												
		90	95	100	105	110	115	120	130	140	150	160	170	180
Zones 1 & 2e	0	118	118	118	118	114	109	106	99	93	87	81	75	70
	10	100	100	100	100	100	100	100	99	93	87	81	75	70
	20	79	79	79	79	79	79	79	79	79	79	79	75	70
	30	79	79	79	79	79	79	79	79	79	79	79	75	70
	40	70	70	70	70	70	70	70	70	70	70	70	70	70
	50	63	63	63	63	63	63	63	63	63	63	63	63	63
	60	58	58	58	58	58	58	58	58	58	58	58	58	58
	70	54	54	54	54	54	54	54	54	54	54	54	54	54
	80	51	51	51	51	51	51	51	51	51	51	51	51	51
	90	48	48	48	48	48	48	48	48	48	48	48	48	48
Zones 2n, 2r, & 3e	0	118	114	108	103	99	95	92	83	75	68	64	60	56
	10	100	100	100	100	99	95	92	83	75	68	64	60	56
	20	79	79	79	79	79	79	79	79	75	68	64	60	56
	30	79	79	79	79	79	79	79	79	75	68	64	60	56
	40	70	70	70	70	70	70	70	70	70	68	64	60	56
	50	63	63	63	63	63	63	63	63	63	63	63	60	56
	60	58	58	58	58	58	58	58	58	58	58	58	58	56
	70	54	54	54	54	54	54	54	54	54	54	54	54	54
	80	51	51	51	51	51	51	51	51	51	51	51	51	51
	90	48	48	48	48	48	48	48	48	48	48	48	48	48
Zone 3r	0	110	104	100	95	92	87	82	73	66	62	58	54	51
	10	100	100	100	95	92	87	82	73	66	62	58	54	51
	20	79	79	79	79	79	79	79	73	66	62	58	54	51
	30	79	79	79	79	79	79	79	73	66	62	58	54	51
	40	70	70	70	70	70	70	70	70	66	62	58	54	51
	50	63	63	63	63	63	63	63	63	63	62	58	54	51
	60	58	58	58	58	58	58	58	58	58	58	58	54	51
	70	54	54	54	54	54	54	54	54	54	54	54	54	51
	80	51	51	51	51	51	51	51	51	51	51	51	51	51
	90	48	48	48	48	48	48	48	48	48	48	48	48	48

Notes:

1. Tables are based on critical rail span for load combinations as specified in chapter 2 of the ASCE 7-16 and allowable design loads per the 2015 Aluminum Design Manual.
2. Panels are assumed to be in landscape orientation with a maximum width of 42"

Structural ENGINUITY INC
Ingenuity in Engineering

SUNMODO®

Max Rail Spans for SunModo SMR100 System

Table 124b

Mean Roof Height: 15 < h ≤ 30 ft
Roof Angle: 7 < θ ≤ 20 degrees
Exposure Category: B

Panel Orientation: Landscape
North/South Support γ_E = 1.5
Roof Type : Gable

Roof Wind Zone	Ground Snow Load (psf)	Wind Speed (mph)												
		90	95	100	105	110	115	120	130	140	150	160	170	180
Zones 1 & 2e	0	113	108	104	100	96	93	90	81	74	68	64	60	56
	10	100	100	100	100	96	93	90	81	74	68	64	60	56
	20	79	79	79	79	79	79	79	79	74	68	64	60	56
	30	79	79	79	79	79	79	79	79	74	68	64	60	56
	40	70	70	70	70	70	70	70	70	70	68	64	60	56
	50	63	63	63	63	63	63	63	63	63	63	63	60	56
	60	58	58	58	58	58	58	58	58	58	58	58	58	56
	70	54	54	54	54	54	54	54	54	54	54	54	54	54
	80	51	51	51	51	51	51	51	51	51	51	51	51	51
	90	48	48	48	48	48	48	48	48	48	48	48	48	48
Zones 2n, 2r, & 3e	0	99	94	90	85	79	74	70	64	59	55	51	48	45
	10	99	94	90	85	79	74	70	64	59	55	51	48	45
	20	79	79	79	79	79	74	70	64	59	55	51	48	45
	30	79	79	79	79	79	74	70	64	59	55	51	48	45
	40	70	70	70	70	70	70	70	64	59	55	51	48	45
	50	63	63	63	63	63	63	63	63	59	55	51	48	45
	60	58	58	58	58	58	58	58	58	58	55	51	48	45
	70	54	54	54	54	54	54	54	54	54	54	51	48	45
	80	51	51	51	51	51	51	51	51	51	51	51	48	45
	90	48	48	48	48	48	48	48	48	48	48	48	48	45
Zone 3r	0	91	86	80	74	70	66	63	58	54	50	47	44	41
	10	91	86	80	74	70	66	63	58	54	50	47	44	41
	20	79	79	79	74	70	66	63	58	54	50	47	44	41
	30	79	79	79	74	70	66	63	58	54	50	47	44	41
	40	70	70	70	70	70	66	63	58	54	50	47	44	41
	50	63	63	63	63	63	63	63	58	54	50	47	44	41
	60	58	58	58	58	58	58	58	58	54	50	47	44	41
	70	54	54	54	54	54	54	54	54	54	50	47	44	41
	80	51	51	51	51	51	51	51	51	51	50	47	44	41
	90	48	48	48	48	48	48	48	48	48	48	47	44	41

Notes:

1. Tables are based on critical rail span for load combinations as specified in chapter 2 of the ASCE 7-16 and allowable design loads per the 2015 Aluminum Design Manual.
2. Panels are assumed to be in landscape orientation with a maximum width of 42"

Structural ENGINUITY INC
Ingenuity in Engineering

SUNMODO®

Max Rail Spans for SunModo SMR100 System

Table 125a

Mean Roof Height: 15 < h ≤ 30 ft
Roof Angle: 7 < θ ≤ 20 degrees
Exposure Category: C

Panel Orientation: Landscape
North/South Support γ_E = 1
Roof Type : Gable

Roof Wind Zone	Ground Snow Load (psf)	Wind Speed (mph)												
		90	95	100	105	110	115	120	130	140	150	160	170	180
Zones 1 & 2e	0	117	112	107	103	99	95	92	85	77	71	66	62	58
	10	100	100	100	100	99	95	92	85	77	71	66	62	58
	20	79	79	79	79	79	79	79	79	77	71	66	62	58
	30	79	79	79	79	79	79	79	79	77	71	66	62	58
	40	70	70	70	70	70	70	70	70	70	70	66	62	58
	50	63	63	63	63	63	63	63	63	63	63	63	62	58
	60	58	58	58	58	58	58	58	58	58	58	58	58	58
	70	54	54	54	54	54	54	54	54	54	54	54	54	54
	80	51	51	51	51	51	51	51	51	51	51	51	51	51
	90	48	48	48	48	48	48	48	48	48	48	48	48	48
Zones 2n, 2r, & 3e	0	102	97	93	89	83	78	73	66	61	57	53	50	47
	10	100	97	93	89	83	78	73	66	61	57	53	50	47
	20	79	79	79	79	79	78	73	66	61	57	53	50	47
	30	79	79	79	79	79	78	73	66	61	57	53	50	47
	40	70	70	70	70	70	70	70	66	61	57	53	50	47
	50	63	63	63	63	63	63	63	63	61	57	53	50	47
	60	58	58	58	58	58	58	58	58	58	57	53	50	47
	70	54	54	54	54	54	54	54	54	54	54	53	50	47
	80	51	51	51	51	51	51	51	51	51	51	51	50	47
	90	48	48	48	48	48	48	48	48	48	48	48	48	47
Zone 3r	0	94	90	84	78	73	69	66	60	56	52	48	45	43
	10	94	90	84	78	73	69	66	60	56	52	48	45	43
	20	79	79	79	78	73	69	66	60	56	52	48	45	43
	30	79	79	79	78	73	69	66	60	56	52	48	45	43
	40	70	70	70	70	70	69	66	60	56	52	48	45	43
	50	63	63	63	63	63	63	63	60	56	52	48	45	43
	60	58	58	58	58	58	58	58	58	56	52	48	45	43
	70	54	54	54	54	54	54	54	54	54	52	48	45	43
	80	51	51	51	51	51	51	51	51	51	51	48	45	43
	90	48	48	48	48	48	48	48	48	48	48	48	45	43

Notes:

1. Tables are based on critical rail span for load combinations as specified in chapter 2 of the ASCE 7-16 and allowable design loads per the 2015 Aluminum Design Manual.
2. Panels are assumed to be in landscape orientation with a maximum width of 42"

Structural ENGINUITY INC
Ingenuity in Engineering

SUNMODO®

Max Rail Spans for SunModo SMR100 System

Table 125b

Mean Roof Height: 15 < h ≤ 30 ft
Roof Angle: 7 < θ ≤ 20 degrees
Exposure Category: C

Panel Orientation: Landscape
North/South Support γ_E = 1.5
Roof Type : Gable

Roof Wind Zone	Ground Snow Load (psf)	Wind Speed (mph)												
		90	95	100	105	110	115	120	130	140	150	160	170	180
Zones 1 & 2e	0	99	94	91	86	81	77	73	66	61	57	53	50	47
	10	99	94	91	86	81	77	73	66	61	57	53	50	47
	20	79	79	79	79	79	77	73	66	61	57	53	50	47
	30	79	79	79	79	79	77	73	66	61	57	53	50	47
	40	70	70	70	70	70	70	70	66	61	57	53	50	47
	50	63	63	63	63	63	63	63	63	61	57	53	50	47
	60	58	58	58	58	58	58	58	58	58	57	53	50	47
	70	54	54	54	54	54	54	54	54	54	54	53	50	47
	80	51	51	51	51	51	51	51	51	51	51	51	50	47
	90	48	48	48	48	48	48	48	48	48	48	48	48	47
Zones 2n, 2r, & 3e	0	83	77	71	67	64	61	58	54	50	46	43	40	38
	10	83	77	71	67	64	61	58	54	50	46	43	40	38
	20	79	77	71	67	64	61	58	54	50	46	43	40	38
	30	79	77	71	67	64	61	58	54	50	46	43	40	38
	40	70	70	70	67	64	61	58	54	50	46	43	40	38
	50	63	63	63	63	63	61	58	54	50	46	43	40	38
	60	58	58	58	58	58	58	58	54	50	46	43	40	38
	70	54	54	54	54	54	54	54	54	50	46	43	40	38
	80	51	51	51	51	51	51	51	51	50	46	43	40	38
	90	48	48	48	48	48	48	48	48	48	46	43	40	38
Zone 3r	0	73	68	64	61	58	55	53	49	45	42	39	37	35
	10	73	68	64	61	58	55	53	49	45	42	39	37	35
	20	73	68	64	61	58	55	53	49	45	42	39	37	35
	30	73	68	64	61	58	55	53	49	45	42	39	37	35
	40	70	68	64	61	58	55	53	49	45	42	39	37	35
	50	63	63	63	61	58	55	53	49	45	42	39	37	35
	60	58	58	58	58	58	55	53	49	45	42	39	37	35
	70	54	54	54	54	54	54	53	49	45	42	39	37	35
	80	51	51	51	51	51	51	51	49	45	42	39	37	35
	90	48	48	48	48	48	48	48	48	45	42	39	37	35

Notes:

1. Tables are based on critical rail span for load combinations as specified in chapter 2 of the ASCE 7-16 and allowable design loads per the 2015 Aluminum Design Manual.
2. Panels are assumed to be in landscape orientation with a maximum width of 42"

Structural ENGINUITY INC
Ingenuity in Engineering

SUNMODO®

Max Rail Spans for SunModo SMR100 System

Table 126a

Mean Roof Height: 15 < h ≤ 30 ft
Roof Angle: 7 < θ ≤ 20 degrees
Exposure Category: D

Panel Orientation: Landscape
North/South Support γ_E = 1
Roof Type : Gable

Roof Wind Zone	Ground Snow Load (psf)	Wind Speed (mph)												
		90	95	100	105	110	115	120	130	140	150	160	170	180
Zones 1 & 2e	0	109	104	100	96	92	89	84	76	70	65	60	57	53
	10	100	100	100	96	92	89	84	76	70	65	60	57	53
	20	79	79	79	79	79	79	79	76	70	65	60	57	53
	30	79	79	79	79	79	79	79	76	70	65	60	57	53
	40	70	70	70	70	70	70	70	70	70	65	60	57	53
	50	63	63	63	63	63	63	63	63	63	63	60	57	53
	60	58	58	58	58	58	58	58	58	58	58	58	57	53
	70	54	54	54	54	54	54	54	54	54	54	54	54	53
	80	51	51	51	51	51	51	51	51	51	51	51	51	51
	90	48	48	48	48	48	48	48	48	48	48	48	48	48
Zones 2n, 2r, & 3e	0	95	90	85	79	74	69	66	61	56	52	49	46	43
	10	95	90	85	79	74	69	66	61	56	52	49	46	43
	20	79	79	79	79	74	69	66	61	56	52	49	46	43
	30	79	79	79	79	74	69	66	61	56	52	49	46	43
	40	70	70	70	70	70	69	66	61	56	52	49	46	43
	50	63	63	63	63	63	63	63	61	56	52	49	46	43
	60	58	58	58	58	58	58	58	58	56	52	49	46	43
	70	54	54	54	54	54	54	54	54	54	52	49	46	43
	80	51	51	51	51	51	51	51	51	51	51	49	46	43
	90	48	48	48	48	48	48	48	48	48	48	48	46	43
Zone 3r	0	86	80	74	69	66	63	60	55	51	47	44	42	39
	10	86	80	74	69	66	63	60	55	51	47	44	42	39
	20	79	79	74	69	66	63	60	55	51	47	44	42	39
	30	79	79	74	69	66	63	60	55	51	47	44	42	39
	40	70	70	70	69	66	63	60	55	51	47	44	42	39
	50	63	63	63	63	63	63	60	55	51	47	44	42	39
	60	58	58	58	58	58	58	58	55	51	47	44	42	39
	70	54	54	54	54	54	54	54	54	51	47	44	42	39
	80	51	51	51	51	51	51	51	51	51	47	44	42	39
	90	48	48	48	48	48	48	48	48	48	47	44	42	39

Notes:

1. Tables are based on critical rail span for load combinations as specified in chapter 2 of the ASCE 7-16 and allowable design loads per the 2015 Aluminum Design Manual.
2. Panels are assumed to be in landscape orientation with a maximum width of 42"

Structural ENGINUITY INC
Ingenuity in Engineering

SUNMODO®

Max Rail Spans for SunModo SMR100 System

Table 126b

Mean Roof Height: 15 < h ≤ 30 ft
Roof Angle: 7 < θ ≤ 20 degrees
Exposure Category: D

Panel Orientation: Landscape
North/South Support γ_E = 1.5
Roof Type : Gable

Roof Wind Zone	Ground Snow Load (psf)	Wind Speed (mph)												
		90	95	100	105	110	115	120	130	140	150	160	170	180
Zones 1 & 2e	0	92	88	82	77	73	69	66	61	56	52	49	46	43
	10	92	88	82	77	73	69	66	61	56	52	49	46	43
	20	79	79	79	77	73	69	66	61	56	52	49	46	43
	30	79	79	79	77	73	69	66	61	56	52	49	46	43
	40	70	70	70	70	70	69	66	61	56	52	49	46	43
	50	63	63	63	63	63	63	63	61	56	52	49	46	43
	60	58	58	58	58	58	58	58	58	56	52	49	46	43
	70	54	54	54	54	54	54	54	54	54	52	49	46	43
	80	51	51	51	51	51	51	51	51	51	51	49	46	43
	90	48	48	48	48	48	48	48	48	48	48	48	46	43
Zones 2n, 2r, & 3e	0	74	68	65	61	58	56	53	49	45	42	40	37	35
	10	74	68	65	61	58	56	53	49	45	42	40	37	35
	20	74	68	65	61	58	56	53	49	45	42	40	37	35
	30	74	68	65	61	58	56	53	49	45	42	40	37	35
	40	70	68	65	61	58	56	53	49	45	42	40	37	35
	50	63	63	63	61	58	56	53	49	45	42	40	37	35
	60	58	58	58	58	58	56	53	49	45	42	40	37	35
	70	54	54	54	54	54	54	53	49	45	42	40	37	35
	80	51	51	51	51	51	51	51	49	45	42	40	37	35
	90	48	48	48	48	48	48	48	48	45	42	40	37	35
Zone 3r	0	66	62	59	56	53	51	48	45	41	38	36	34	32
	10	66	62	59	56	53	51	48	45	41	38	36	34	32
	20	66	62	59	56	53	51	48	45	41	38	36	34	32
	30	66	62	59	56	53	51	48	45	41	38	36	34	32
	40	66	62	59	56	53	51	48	45	41	38	36	34	32
	50	63	62	59	56	53	51	48	45	41	38	36	34	32
	60	58	58	58	56	53	51	48	45	41	38	36	34	32
	70	54	54	54	54	53	51	48	45	41	38	36	34	32
	80	51	51	51	51	51	51	48	45	41	38	36	34	32
	90	48	48	48	48	48	48	48	45	41	38	36	34	32

Notes:

1. Tables are based on critical rail span for load combinations as specified in chapter 2 of the ASCE 7-16 and allowable design loads per the 2015 Aluminum Design Manual.
2. Panels are assumed to be in landscape orientation with a maximum width of 42"

Structural ENGINUITY INC
Ingenuity in Engineering

SUNMODO®

Max Rail Spans for SunModo SMR100 System

Table 127a

Mean Roof Height: 15 < h ≤ 30 ft
Roof Angle: 20 < θ ≤ 27 degrees
Exposure Category: B

Panel Orientation: Landscape
North/South Support γ_E = 1
Roof Type : Gable

Roof Wind Zone	Ground Snow Load (psf)	Wind Speed (mph)												
		90	95	100	105	110	115	120	130	140	150	160	170	180
Zones 1 & 2e	0	118	118	118	118	118	118	118	111	104	99	94	89	84
	10	107	107	107	107	107	107	107	107	104	99	94	89	84
	20	92	92	92	92	92	92	92	92	92	91	89	88	84
	30	79	79	79	79	79	79	79	79	79	79	79	78	77
	40	70	70	70	70	70	70	70	70	70	70	70	70	70
	50	63	63	63	63	63	63	63	63	63	63	63	63	63
	60	58	58	58	58	58	58	58	58	58	58	58	58	58
	70	54	54	54	54	54	54	54	54	54	54	54	54	54
	80	51	51	51	51	51	51	51	51	51	51	51	51	51
	90	48	48	48	48	48	48	48	48	48	48	48	48	48
Zones 2n, 2r, & 3e	0	118	118	117	112	107	103	99	92	86	78	71	66	62
	10	107	107	107	107	107	103	99	92	86	78	71	66	62
	20	92	92	92	92	92	92	92	92	86	78	71	66	62
	30	79	79	79	79	79	79	79	79	79	78	71	66	62
	40	70	70	70	70	70	70	70	70	70	70	70	66	62
	50	63	63	63	63	63	63	63	63	63	63	63	63	62
	60	58	58	58	58	58	58	58	58	58	58	58	58	58
	70	54	54	54	54	54	54	54	54	54	54	54	54	54
	80	51	51	51	51	51	51	51	51	51	51	51	51	51
	90	48	48	48	48	48	48	48	48	48	48	48	48	48
Zone 3r	0	118	115	110	105	100	96	93	86	77	70	64	59	56
	10	107	107	107	105	100	96	93	86	77	70	64	59	56
	20	92	92	92	92	92	92	92	86	77	70	64	59	56
	30	79	79	79	79	79	79	79	79	77	70	64	59	56
	40	70	70	70	70	70	70	70	70	70	70	64	59	56
	50	63	63	63	63	63	63	63	63	63	63	63	59	56
	60	58	58	58	58	58	58	58	58	58	58	58	58	56
	70	54	54	54	54	54	54	54	54	54	54	54	54	54
	80	51	51	51	51	51	51	51	51	51	51	51	51	51
	90	48	48	48	48	48	48	48	48	48	48	48	48	48

Notes:

1. Tables are based on critical rail span for load combinations as specified in chapter 2 of the ASCE 7-16 and allowable design loads per the 2015 Aluminum Design Manual.
2. Panels are assumed to be in landscape orientation with a maximum width of 42"

Structural ENGINUITY INC
Ingenuity in Engineering

SUNMODO®

Max Rail Spans for SunModo SMR100 System

Table 127b

Mean Roof Height: 15 < h ≤ 30 ft
Roof Angle: 20 < θ ≤ 27 degrees
Exposure Category: B

Panel Orientation: Landscape
North/South Support γ_E = 1.5
Roof Type : Gable

Roof Wind Zone	Ground Snow Load (psf)	Wind Speed (mph)												
		90	95	100	105	110	115	120	130	140	150	160	170	180
Zones 1 & 2e	0	118	118	117	112	108	104	100	94	89	82	76	70	66
	10	107	107	107	107	107	104	100	94	89	82	76	70	66
	20	92	92	92	92	92	92	92	92	89	82	76	70	66
	30	79	79	79	79	79	79	79	79	79	79	76	70	66
	40	70	70	70	70	70	70	70	70	70	70	70	70	66
	50	63	63	63	63	63	63	63	63	63	63	63	63	63
	60	58	58	58	58	58	58	58	58	58	58	58	58	58
	70	54	54	54	54	54	54	54	54	54	54	54	54	54
	80	51	51	51	51	51	51	51	51	51	51	51	51	51
	90	48	48	48	48	48	48	48	48	48	48	48	48	48
Zones 2n, 2r, & 3e	0	107	102	97	93	90	86	80	72	65	61	57	53	50
	10	107	102	97	93	90	86	80	72	65	61	57	53	50
	20	92	92	92	92	90	86	80	72	65	61	57	53	50
	30	79	79	79	79	79	79	79	72	65	61	57	53	50
	40	70	70	70	70	70	70	70	70	65	61	57	53	50
	50	63	63	63	63	63	63	63	63	63	61	57	53	50
	60	58	58	58	58	58	58	58	58	58	58	57	53	50
	70	54	54	54	54	54	54	54	54	54	54	54	53	50
	80	51	51	51	51	51	51	51	51	51	51	51	51	50
	90	48	48	48	48	48	48	48	48	48	48	48	48	48
Zone 3r	0	100	95	91	87	82	76	72	64	59	54	50	47	44
	10	100	95	91	87	82	76	72	64	59	54	50	47	44
	20	92	92	91	87	82	76	72	64	59	54	50	47	44
	30	79	79	79	79	79	76	72	64	59	54	50	47	44
	40	70	70	70	70	70	70	70	64	59	54	50	47	44
	50	63	63	63	63	63	63	63	63	59	54	50	47	44
	60	58	58	58	58	58	58	58	58	58	54	50	47	44
	70	54	54	54	54	54	54	54	54	54	54	50	47	44
	80	51	51	51	51	51	51	51	51	51	51	50	47	44
	90	48	48	48	48	48	48	48	48	48	48	48	47	44

Notes:

1. Tables are based on critical rail span for load combinations as specified in chapter 2 of the ASCE 7-16 and allowable design loads per the 2015 Aluminum Design Manual.
2. Panels are assumed to be in landscape orientation with a maximum width of 42"

Structural ENGINUITY INC
Ingenuity in Engineering

SUNMODO®

Max Rail Spans for SunModo SMR100 System

Table 128a

Mean Roof Height: 15 < h ≤ 30 ft
Roof Angle: 20 < θ ≤ 27 degrees
Exposure Category: C

Panel Orientation: Landscape
North/South Support γ_E = 1
Roof Type : Gable

Roof Wind Zone	Ground Snow Load (psf)	Wind Speed (mph)												
		90	95	100	105	110	115	120	130	140	150	160	170	180
Zones 1 & 2e	0	118	118	118	115	111	107	103	97	91	86	79	73	68
	10	107	107	107	107	107	107	103	97	91	86	79	73	68
	20	92	92	92	92	92	92	92	90	88	86	79	73	68
	30	79	79	79	79	79	79	79	79	78	77	76	73	68
	40	70	70	70	70	70	70	70	70	70	70	69	68	67
	50	63	63	63	63	63	63	63	63	63	63	63	63	62
	60	58	58	58	58	58	58	58	58	58	58	58	58	58
	70	54	54	54	54	54	54	54	54	54	54	54	54	54
	80	51	51	51	51	51	51	51	51	51	51	51	51	51
	90	48	48	48	48	48	48	48	48	48	48	48	48	48
Zones 2n, 2r, & 3e	0	110	105	100	96	92	89	85	75	68	63	59	55	52
	10	107	105	100	96	92	89	85	75	68	63	59	55	52
	20	92	92	92	92	92	89	85	75	68	63	59	55	52
	30	79	79	79	79	79	79	79	75	68	63	59	55	52
	40	70	70	70	70	70	70	70	70	68	63	59	55	52
	50	63	63	63	63	63	63	63	63	63	63	59	55	52
	60	58	58	58	58	58	58	58	58	58	58	58	55	52
	70	54	54	54	54	54	54	54	54	54	54	54	54	52
	80	51	51	51	51	51	51	51	51	51	51	51	51	51
	90	48	48	48	48	48	48	48	48	48	48	48	48	48
Zone 3r	0	103	98	94	90	86	80	75	67	61	56	52	49	45
	10	103	98	94	90	86	80	75	67	61	56	52	49	45
	20	92	92	92	90	86	80	75	67	61	56	52	49	45
	30	79	79	79	79	79	79	75	67	61	56	52	49	45
	40	70	70	70	70	70	70	70	67	61	56	52	49	45
	50	63	63	63	63	63	63	63	63	61	56	52	49	45
	60	58	58	58	58	58	58	58	58	58	56	52	49	45
	70	54	54	54	54	54	54	54	54	54	54	52	49	45
	80	51	51	51	51	51	51	51	51	51	51	51	49	45
	90	48	48	48	48	48	48	48	48	48	48	48	48	45

Notes:

1. Tables are based on critical rail span for load combinations as specified in chapter 2 of the ASCE 7-16 and allowable design loads per the 2015 Aluminum Design Manual.
2. Panels are assumed to be in landscape orientation with a maximum width of 42"

Structural ENGINUITY INC
Ingenuity in Engineering

SUNMODO®

Max Rail Spans for SunModo SMR100 System

Table 128b

Mean Roof Height: 15 < h ≤ 30 ft
Roof Angle: 20 < θ ≤ 27 degrees
Exposure Category: C

Panel Orientation: Landscape
North/South Support γ_E = 1.5
Roof Type : Gable

Roof Wind Zone	Ground Snow Load (psf)	Wind Speed (mph)												
		90	95	100	105	110	115	120	130	140	150	160	170	180
Zones 1 & 2e	0	111	106	101	98	94	91	88	80	73	67	62	58	55
	10	107	106	101	98	94	91	88	80	73	67	62	58	55
	20	92	92	92	92	92	91	88	80	73	67	62	58	55
	30	79	79	79	79	79	79	79	79	73	67	62	58	55
	40	70	70	70	70	70	70	70	70	70	67	62	58	55
	50	63	63	63	63	63	63	63	63	63	63	62	58	55
	60	58	58	58	58	58	58	58	58	58	58	58	58	55
	70	54	54	54	54	54	54	54	54	54	54	54	54	54
	80	51	51	51	51	51	51	51	51	51	51	51	51	51
	90	48	48	48	48	48	48	48	48	48	48	48	48	48
Zones 2n, 2r, & 3e	0	92	88	82	77	72	68	65	59	55	51	48	45	42
	10	92	88	82	77	72	68	65	59	55	51	48	45	42
	20	92	88	82	77	72	68	65	59	55	51	48	45	42
	30	79	79	79	77	72	68	65	59	55	51	48	45	42
	40	70	70	70	70	70	68	65	59	55	51	48	45	42
	50	63	63	63	63	63	63	63	59	55	51	48	45	42
	60	58	58	58	58	58	58	58	58	55	51	48	45	42
	70	54	54	54	54	54	54	54	54	54	51	48	45	42
	80	51	51	51	51	51	51	51	51	51	51	48	45	42
	90	48	48	48	48	48	48	48	48	48	48	48	45	42
Zone 3r	0	86	79	73	68	64	61	58	53	48	44	41	38	36
	10	86	79	73	68	64	61	58	53	48	44	41	38	36
	20	86	79	73	68	64	61	58	53	48	44	41	38	36
	30	79	79	73	68	64	61	58	53	48	44	41	38	36
	40	70	70	70	68	64	61	58	53	48	44	41	38	36
	50	63	63	63	63	63	61	58	53	48	44	41	38	36
	60	58	58	58	58	58	58	58	53	48	44	41	38	36
	70	54	54	54	54	54	54	54	53	48	44	41	38	36
	80	51	51	51	51	51	51	51	51	48	44	41	38	36
	90	48	48	48	48	48	48	48	48	48	44	41	38	36

Notes:

1. Tables are based on critical rail span for load combinations as specified in chapter 2 of the ASCE 7-16 and allowable design loads per the 2015 Aluminum Design Manual.
2. Panels are assumed to be in landscape orientation with a maximum width of 42"

Structural ENGINUITY INC
Ingenuity in Engineering

SUNMODO®

Max Rail Spans for SunModo SMR100 System

Table 129a

Mean Roof Height: 15 < h ≤ 30 ft
Roof Angle: 20 < θ ≤ 27 degrees
Exposure Category: D

Panel Orientation: Landscape
North/South Support γ_E = 1
Roof Type : Gable

Roof Wind Zone	Ground Snow Load (psf)	Wind Speed (mph)												
		90	95	100	105	110	115	120	130	140	150	160	170	180
Zones 1 & 2e	0	118	117	112	107	103	100	96	90	84	77	71	66	62
	10	107	107	107	107	103	100	96	90	84	77	71	66	62
	20	92	92	92	92	92	91	90	88	84	77	71	66	62
	30	79	79	79	79	79	79	79	78	77	75	71	66	62
	40	70	70	70	70	70	70	70	70	70	69	68	66	62
	50	63	63	63	63	63	63	63	63	63	63	63	62	61
	60	58	58	58	58	58	58	58	58	58	58	58	58	57
	70	54	54	54	54	54	54	54	54	54	54	54	54	54
	80	51	51	51	51	51	51	51	51	51	51	51	51	51
	90	48	48	48	48	48	48	48	48	48	48	48	48	48
Zones 2n, 2r, & 3e	0	102	97	93	89	85	80	75	67	62	58	54	51	48
	10	102	97	93	89	85	80	75	67	62	58	54	51	48
	20	92	92	92	89	85	80	75	67	62	58	54	51	48
	30	79	79	79	79	79	79	75	67	62	58	54	51	48
	40	70	70	70	70	70	70	70	67	62	58	54	51	48
	50	63	63	63	63	63	63	63	63	62	58	54	51	48
	60	58	58	58	58	58	58	58	58	58	58	54	51	48
	70	54	54	54	54	54	54	54	54	54	54	54	51	48
	80	51	51	51	51	51	51	51	51	51	51	51	51	48
	90	48	48	48	48	48	48	48	48	48	48	48	48	48
Zone 3r	0	96	91	87	81	76	71	67	61	55	51	47	44	41
	10	96	91	87	81	76	71	67	61	55	51	47	44	41
	20	92	91	87	81	76	71	67	61	55	51	47	44	41
	30	79	79	79	79	76	71	67	61	55	51	47	44	41
	40	70	70	70	70	70	70	67	61	55	51	47	44	41
	50	63	63	63	63	63	63	63	61	55	51	47	44	41
	60	58	58	58	58	58	58	58	58	55	51	47	44	41
	70	54	54	54	54	54	54	54	54	54	51	47	44	41
	80	51	51	51	51	51	51	51	51	51	51	47	44	41
	90	48	48	48	48	48	48	48	48	48	48	47	44	41

Notes:

1. Tables are based on critical rail span for load combinations as specified in chapter 2 of the ASCE 7-16 and allowable design loads per the 2015 Aluminum Design Manual.
2. Panels are assumed to be in landscape orientation with a maximum width of 42"

Structural ENGINUITY INC
Ingenuity in Engineering

SUNMODO®

Max Rail Spans for SunModo SMR100 System

Table 129b

Mean Roof Height: 15 < h ≤ 30 ft
Roof Angle: 20 < θ ≤ 27 degrees
Exposure Category: D

Panel Orientation: Landscape
North/South Support γ_E = 1.5
Roof Type : Gable

Roof Wind Zone	Ground Snow Load (psf)	Wind Speed (mph)												
		90	95	100	105	110	115	120	130	140	150	160	170	180
Zones 1 & 2e	0	103	99	95	91	88	84	79	72	66	61	57	53	50
	10	103	99	95	91	88	84	79	72	66	61	57	53	50
	20	92	92	92	91	88	84	79	72	66	61	57	53	50
	30	79	79	79	79	79	79	79	72	66	61	57	53	50
	40	70	70	70	70	70	70	70	70	66	61	57	53	50
	50	63	63	63	63	63	63	63	63	63	61	57	53	50
	60	58	58	58	58	58	58	58	58	58	58	57	53	50
	70	54	54	54	54	54	54	54	54	54	54	54	53	50
	80	51	51	51	51	51	51	51	51	51	51	51	51	50
	90	48	48	48	48	48	48	48	48	48	48	48	48	48
Zones 2n, 2r, & 3e	0	85	78	73	68	65	62	59	54	50	47	44	41	39
	10	85	78	73	68	65	62	59	54	50	47	44	41	39
	20	85	78	73	68	65	62	59	54	50	47	44	41	39
	30	79	78	73	68	65	62	59	54	50	47	44	41	39
	40	70	70	70	68	65	62	59	54	50	47	44	41	39
	50	63	63	63	63	63	62	59	54	50	47	44	41	39
	60	58	58	58	58	58	58	58	54	50	47	44	41	39
	70	54	54	54	54	54	54	54	54	50	47	44	41	39
	80	51	51	51	51	51	51	51	51	50	47	44	41	39
	90	48	48	48	48	48	48	48	48	48	47	44	41	39
Zone 3r	0	76	70	65	61	58	55	52	48	44	40	37	35	33
	10	76	70	65	61	58	55	52	48	44	40	37	35	33
	20	76	70	65	61	58	55	52	48	44	40	37	35	33
	30	76	70	65	61	58	55	52	48	44	40	37	35	33
	40	70	70	65	61	58	55	52	48	44	40	37	35	33
	50	63	63	63	61	58	55	52	48	44	40	37	35	33
	60	58	58	58	58	58	55	52	48	44	40	37	35	33
	70	54	54	54	54	54	54	52	48	44	40	37	35	33
	80	51	51	51	51	51	51	51	48	44	40	37	35	33
	90	48	48	48	48	48	48	48	48	44	40	37	35	33

Notes:

1. Tables are based on critical rail span for load combinations as specified in chapter 2 of the ASCE 7-16 and allowable design loads per the 2015 Aluminum Design Manual.
2. Panels are assumed to be in landscape orientation with a maximum width of 42"

Structural ENGINUITY INC
Ingenuity in Engineering

SUNMODO®

Max Rail Spans for SunModo SMR100 System

Table 130a

Mean Roof Height: 15 < h ≤ 30 ft
Roof Angle: 27 < θ ≤ 45 degrees
Exposure Category: B

Panel Orientation: Landscape
North/South Support γ_E = 1
Roof Type : Gable

Roof Wind Zone	Ground Snow Load (psf)	Wind Speed (mph)												
		90	95	100	105	110	115	120	130	140	150	160	170	180
Zones 1, 2e, & 2r	0	118	118	118	118	118	118	115	107	100	94	89	84	77
	10	107	107	107	107	107	107	106	103	100	94	89	84	77
	20	93	93	93	93	93	92	91	89	87	85	83	81	77
	30	81	81	81	81	81	81	81	80	78	77	75	73	72
	40	72	72	72	72	72	72	72	72	72	70	69	68	67
	50	66	66	66	66	66	66	66	66	66	66	65	64	63
	60	61	61	61	61	61	61	61	61	61	61	61	60	59
	70	57	57	57	57	57	57	57	57	57	57	57	57	56
	80	53	53	53	53	53	53	53	53	53	53	53	53	53
	90	51	51	51	51	51	51	51	51	51	51	51	51	51
Zones 2n & 3r	0	118	118	118	118	116	112	108	100	94	89	84	77	71
	10	107	107	107	107	107	107	106	100	94	89	84	77	71
	20	93	93	93	93	93	92	91	89	87	85	83	77	71
	30	81	81	81	81	81	81	81	80	78	77	75	73	71
	40	72	72	72	72	72	72	72	72	72	70	69	68	67
	50	66	66	66	66	66	66	66	66	66	66	65	64	63
	60	61	61	61	61	61	61	61	61	61	61	61	60	59
	70	57	57	57	57	57	57	57	57	57	57	57	57	56
	80	53	53	53	53	53	53	53	53	53	53	53	53	53
	90	51	51	51	51	51	51	51	51	51	51	51	51	51
Zone 3e	0	118	118	115	110	106	102	98	92	86	79	72	66	62
	10	107	107	107	107	106	102	98	92	86	79	72	66	62
	20	93	93	93	93	93	92	91	89	86	79	72	66	62
	30	81	81	81	81	81	81	81	80	78	77	72	66	62
	40	72	72	72	72	72	72	72	72	72	70	69	66	62
	50	66	66	66	66	66	66	66	66	66	66	65	64	62
	60	61	61	61	61	61	61	61	61	61	61	61	60	59
	70	57	57	57	57	57	57	57	57	57	57	57	57	56
	80	53	53	53	53	53	53	53	53	53	53	53	53	53
	90	51	51	51	51	51	51	51	51	51	51	51	51	51

Notes:

1. Tables are based on critical rail span for load combinations as specified in chapter 2 of the ASCE 7-16 and allowable design loads per the 2015 Aluminum Design Manual.
2. Panels are assumed to be in landscape orientation with a maximum width of 42"

Structural ENGINUITY INC
Ingenuity in Engineering

SUNMODO®

Max Rail Spans for SunModo SMR100 System

Table 130b

Mean Roof Height: 15 < h ≤ 30 ft
Roof Angle: 27 < θ ≤ 45 degrees
Exposure Category: B

Panel Orientation: Landscape
North/South Support γ_E = 1.5
Roof Type : Gable

Roof Wind Zone	Ground Snow Load (psf)	Wind Speed (mph)												
		90	95	100	105	110	115	120	130	140	150	160	170	180
Zones 1, 2e, & 2r	0	118	118	113	108	103	99	96	89	83	75	68	64	60
	10	107	107	107	107	103	99	96	89	83	75	68	64	60
	20	93	93	93	93	93	92	91	89	83	75	68	64	60
	30	81	81	81	81	81	81	81	80	78	75	68	64	60
	40	72	72	72	72	72	72	72	72	72	70	68	64	60
	50	66	66	66	66	66	66	66	66	66	66	65	64	60
	60	61	61	61	61	61	61	61	61	61	61	61	60	59
	70	57	57	57	57	57	57	57	57	57	57	57	57	56
	80	53	53	53	53	53	53	53	53	53	53	53	53	53
	90	51	51	51	51	51	51	51	51	51	51	51	51	51
Zones 2n & 3r	0	116	111	106	101	97	94	91	84	76	69	64	60	57
	10	107	107	106	101	97	94	91	84	76	69	64	60	57
	20	93	93	93	93	93	92	91	84	76	69	64	60	57
	30	81	81	81	81	81	81	81	80	76	69	64	60	57
	40	72	72	72	72	72	72	72	72	72	69	64	60	57
	50	66	66	66	66	66	66	66	66	66	66	64	60	57
	60	61	61	61	61	61	61	61	61	61	61	61	60	57
	70	57	57	57	57	57	57	57	57	57	57	57	57	56
	80	53	53	53	53	53	53	53	53	53	53	53	53	53
	90	51	51	51	51	51	51	51	51	51	51	51	51	51
Zone 3e	0	106	101	96	92	89	86	81	72	66	60	56	52	49
	10	106	101	96	92	89	86	81	72	66	60	56	52	49
	20	93	93	93	92	89	86	81	72	66	60	56	52	49
	30	81	81	81	81	81	81	81	72	66	60	56	52	49
	40	72	72	72	72	72	72	72	72	66	60	56	52	49
	50	66	66	66	66	66	66	66	66	66	60	56	52	49
	60	61	61	61	61	61	61	61	61	61	60	56	52	49
	70	57	57	57	57	57	57	57	57	57	57	56	52	49
	80	53	53	53	53	53	53	53	53	53	53	53	52	49
	90	51	51	51	51	51	51	51	51	51	51	51	51	49

Notes:

1. Tables are based on critical rail span for load combinations as specified in chapter 2 of the ASCE 7-16 and allowable design loads per the 2015 Aluminum Design Manual.
2. Panels are assumed to be in landscape orientation with a maximum width of 42"

Structural ENGINUITY INC
Ingenuity in Engineering

SUNMODO®

Max Rail Spans for SunModo SMR100 System

Table 131a

Mean Roof Height: 15 < h ≤ 30 ft
Roof Angle: 27 < θ ≤ 45 degrees
Exposure Category: C

Panel Orientation: Landscape
North/South Support γ_E = 1
Roof Type : Gable

Roof Wind Zone	Ground Snow Load (psf)	Wind Speed (mph)												
		90	95	100	105	110	115	120	130	140	150	160	170	180
Zones 1, 2e, & 2r	0	118	118	117	111	107	102	99	92	86	79	71	66	62
	10	107	107	107	105	103	101	99	92	86	79	71	66	62
	20	93	93	91	90	89	88	87	84	82	79	71	66	62
	30	81	81	81	81	80	79	78	76	74	72	70	66	62
	40	72	72	72	72	72	72	71	70	68	67	66	64	62
	50	66	66	66	66	66	66	66	65	64	63	62	60	59
	60	61	61	61	61	61	61	61	61	60	59	58	57	56
	70	57	57	57	57	57	57	57	57	57	57	56	55	54
	80	53	53	53	53	53	53	53	53	53	53	53	52	52
	90	51	51	51	51	51	51	51	51	51	51	51	50	50
Zones 2n & 3r	0	118	114	109	104	100	97	93	87	80	72	67	62	59
	10	107	107	107	104	100	97	93	87	80	72	67	62	59
	20	93	93	91	90	89	88	87	84	80	72	67	62	59
	30	81	81	81	81	80	79	78	76	74	72	67	62	59
	40	72	72	72	72	72	72	71	70	68	67	66	62	59
	50	66	66	66	66	66	66	66	65	64	63	62	60	59
	60	61	61	61	61	61	61	61	61	60	59	58	57	56
	70	57	57	57	57	57	57	57	57	57	57	56	55	54
	80	53	53	53	53	53	53	53	53	53	53	53	52	52
	90	51	51	51	51	51	51	51	51	51	51	51	50	50
Zone 3e	0	109	104	99	95	92	88	85	76	68	63	58	54	51
	10	107	104	99	95	92	88	85	76	68	63	58	54	51
	20	93	93	91	90	89	88	85	76	68	63	58	54	51
	30	81	81	81	81	80	79	78	76	68	63	58	54	51
	40	72	72	72	72	72	72	71	70	68	63	58	54	51
	50	66	66	66	66	66	66	66	65	64	63	58	54	51
	60	61	61	61	61	61	61	61	61	60	59	58	54	51
	70	57	57	57	57	57	57	57	57	57	57	56	54	51
	80	53	53	53	53	53	53	53	53	53	53	53	52	51
	90	51	51	51	51	51	51	51	51	51	51	51	50	50

Notes:

1. Tables are based on critical rail span for load combinations as specified in chapter 2 of the ASCE 7-16 and allowable design loads per the 2015 Aluminum Design Manual.
2. Panels are assumed to be in landscape orientation with a maximum width of 42"

Structural ENGINUITY INC
Ingenuity in Engineering

SUNMODO®

Max Rail Spans for SunModo SMR100 System

Table 131b

Mean Roof Height: 15 < h ≤ 30 ft
Roof Angle: 27 < θ ≤ 45 degrees
Exposure Category: C

Panel Orientation: Landscape
North/South Support γ_E = 1.5
Roof Type : Gable

Roof Wind Zone	Ground Snow Load (psf)	Wind Speed (mph)												
		90	95	100	105	110	115	120	130	140	150	160	170	180
Zones 1, 2e, & 2r	0	106	101	97	93	89	86	81	72	65	61	57	53	50
	10	106	101	97	93	89	86	81	72	65	61	57	53	50
	20	93	93	91	90	89	86	81	72	65	61	57	53	50
	30	81	81	81	81	80	79	78	72	65	61	57	53	50
	40	72	72	72	72	72	72	71	70	65	61	57	53	50
	50	66	66	66	66	66	66	66	65	64	61	57	53	50
	60	61	61	61	61	61	61	61	61	60	59	57	53	50
	70	57	57	57	57	57	57	57	57	57	57	56	53	50
	80	53	53	53	53	53	53	53	53	53	53	53	52	50
	90	51	51	51	51	51	51	51	51	51	51	51	50	50
Zones 2n & 3r	0	100	96	92	88	84	79	74	67	62	57	54	50	47
	10	100	96	92	88	84	79	74	67	62	57	54	50	47
	20	93	93	91	88	84	79	74	67	62	57	54	50	47
	30	81	81	81	81	80	79	74	67	62	57	54	50	47
	40	72	72	72	72	72	72	71	67	62	57	54	50	47
	50	66	66	66	66	66	66	66	65	62	57	54	50	47
	60	61	61	61	61	61	61	61	61	60	57	54	50	47
	70	57	57	57	57	57	57	57	57	57	57	54	50	47
	80	53	53	53	53	53	53	53	53	53	53	53	50	47
	90	51	51	51	51	51	51	51	51	51	51	51	50	47
Zone 3e	0	91	87	83	77	72	68	64	59	54	50	46	43	40
	10	91	87	83	77	72	68	64	59	54	50	46	43	40
	20	91	87	83	77	72	68	64	59	54	50	46	43	40
	30	81	81	81	77	72	68	64	59	54	50	46	43	40
	40	72	72	72	72	72	68	64	59	54	50	46	43	40
	50	66	66	66	66	66	66	64	59	54	50	46	43	40
	60	61	61	61	61	61	61	61	59	54	50	46	43	40
	70	57	57	57	57	57	57	57	57	54	50	46	43	40
	80	53	53	53	53	53	53	53	53	53	50	46	43	40
	90	51	51	51	51	51	51	51	51	51	50	46	43	40

Notes:

1. Tables are based on critical rail span for load combinations as specified in chapter 2 of the ASCE 7-16 and allowable design loads per the 2015 Aluminum Design Manual.
2. Panels are assumed to be in landscape orientation with a maximum width of 42"

Structural ENGINUITY INC
Ingenuity in Engineering

SUNMODO®

Max Rail Spans for SunModo SMR100 System

Table 132a

Mean Roof Height: 15 < h ≤ 30 ft
Roof Angle: 27 < θ ≤ 45 degrees
Exposure Category: D

Panel Orientation: Landscape
North/South Support γ_E = 1
Roof Type : Gable

Roof Wind Zone	Ground Snow Load (psf)	Wind Speed (mph)												
		90	95	100	105	110	115	120	130	140	150	160	170	180
Zones 1, 2e, & 2r	0	118	113	108	103	99	95	92	86	77	69	64	60	57
	10	107	105	104	102	99	95	92	86	77	69	64	60	57
	20	92	91	89	88	87	86	84	81	77	69	64	60	57
	30	81	81	80	79	78	77	76	74	72	69	64	60	57
	40	72	72	72	72	71	71	70	68	67	65	63	60	57
	50	66	66	66	66	66	66	65	64	63	61	60	59	57
	60	61	61	61	61	61	61	61	60	59	58	57	56	55
	70	57	57	57	57	57	57	57	57	56	55	54	53	52
	80	53	53	53	53	53	53	53	53	53	53	52	51	50
	90	51	51	51	51	51	51	51	51	51	51	50	49	49
Zones 2n & 3r	0	111	106	101	97	93	90	87	79	71	65	61	57	54
	10	107	105	101	97	93	90	87	79	71	65	61	57	54
	20	92	91	89	88	87	86	84	79	71	65	61	57	54
	30	81	81	80	79	78	77	76	74	71	65	61	57	54
	40	72	72	72	72	71	71	70	68	67	65	61	57	54
	50	66	66	66	66	66	66	65	64	63	61	60	57	54
	60	61	61	61	61	61	61	61	60	59	58	57	56	54
	70	57	57	57	57	57	57	57	57	56	55	54	53	52
	80	53	53	53	53	53	53	53	53	53	53	52	51	50
	90	51	51	51	51	51	51	51	51	51	51	50	49	49
Zone 3e	0	101	96	92	89	85	80	75	67	62	57	53	49	46
	10	101	96	92	89	85	80	75	67	62	57	53	49	46
	20	92	91	89	88	85	80	75	67	62	57	53	49	46
	30	81	81	80	79	78	77	75	67	62	57	53	49	46
	40	72	72	72	72	71	71	70	67	62	57	53	49	46
	50	66	66	66	66	66	66	65	64	62	57	53	49	46
	60	61	61	61	61	61	61	61	60	59	57	53	49	46
	70	57	57	57	57	57	57	57	57	56	55	53	49	46
	80	53	53	53	53	53	53	53	53	53	53	52	49	46
	90	51	51	51	51	51	51	51	51	51	51	50	49	46

Notes:

1. Tables are based on critical rail span for load combinations as specified in chapter 2 of the ASCE 7-16 and allowable design loads per the 2015 Aluminum Design Manual.
2. Panels are assumed to be in landscape orientation with a maximum width of 42"

Structural ENGINUITY INC
Ingenuity in Engineering

SUNMODO®

Max Rail Spans for SunModo SMR100 System

Table 132b

Mean Roof Height: 15 < h ≤ 30 ft
Roof Angle: 27 < θ ≤ 45 degrees
Exposure Category: D

Panel Orientation: Landscape
North/South Support γ_E = 1.5
Roof Type : Gable

Roof Wind Zone	Ground Snow Load (psf)	Wind Speed (mph)												
		90	95	100	105	110	115	120	130	140	150	160	170	180
Zones 1, 2e, & 2r	0	99	94	90	86	81	76	71	65	60	55	52	49	46
	10	99	94	90	86	81	76	71	65	60	55	52	49	46
	20	92	91	89	86	81	76	71	65	60	55	52	49	46
	30	81	81	80	79	78	76	71	65	60	55	52	49	46
	40	72	72	72	72	71	71	70	65	60	55	52	49	46
	50	66	66	66	66	66	66	65	64	60	55	52	49	46
	60	61	61	61	61	61	61	61	60	59	55	52	49	46
	70	57	57	57	57	57	57	57	57	56	55	52	49	46
	80	53	53	53	53	53	53	53	53	53	53	52	49	46
	90	51	51	51	51	51	51	51	51	51	51	50	49	46
Zones 2n & 3r	0	93	89	85	80	75	70	67	61	56	52	49	46	43
	10	93	89	85	80	75	70	67	61	56	52	49	46	43
	20	92	89	85	80	75	70	67	61	56	52	49	46	43
	30	81	81	80	79	75	70	67	61	56	52	49	46	43
	40	72	72	72	72	71	70	67	61	56	52	49	46	43
	50	66	66	66	66	66	66	65	61	56	52	49	46	43
	60	61	61	61	61	61	61	61	60	56	52	49	46	43
	70	57	57	57	57	57	57	57	57	56	52	49	46	43
	80	53	53	53	53	53	53	53	53	53	52	49	46	43
	90	51	51	51	51	51	51	51	51	51	51	49	46	43
Zone 3e	0	85	79	73	68	65	61	58	53	49	45	42	39	37
	10	85	79	73	68	65	61	58	53	49	45	42	39	37
	20	85	79	73	68	65	61	58	53	49	45	42	39	37
	30	81	79	73	68	65	61	58	53	49	45	42	39	37
	40	72	72	72	68	65	61	58	53	49	45	42	39	37
	50	66	66	66	66	65	61	58	53	49	45	42	39	37
	60	61	61	61	61	61	61	58	53	49	45	42	39	37
	70	57	57	57	57	57	57	57	53	49	45	42	39	37
	80	53	53	53	53	53	53	53	53	49	45	42	39	37
	90	51	51	51	51	51	51	51	51	49	45	42	39	37

Notes:

1. Tables are based on critical rail span for load combinations as specified in chapter 2 of the ASCE 7-16 and allowable design loads per the 2015 Aluminum Design Manual.
2. Panels are assumed to be in landscape orientation with a maximum width of 42"

Structural ENGINUITY INC
Ingenuity in Engineering

SUNMODO®

Max Rail Spans for SunModo SMR100 System

Table 133a

Mean Roof Height: 15 < h ≤ 30 ft
Roof Angle: 7 < θ ≤ 20 degrees
Exposure Category: B

Panel Orientation: Landscape
North/South Support γ_E = 1
Roof Type : Hip h/B = ≥ 0.8

Roof Wind Zone	Ground Snow Load (psf)	Wind Speed (mph)												
		90	95	100	105	110	115	120	130	140	150	160	170	180
Zone 1	0	118	118	118	118	118	114	110	103	97	92	86	80	74
	10	100	100	100	100	100	100	100	99	97	92	86	80	74
	20	79	79	79	79	79	79	79	79	79	78	77	75	74
	30	79	79	79	79	79	79	79	79	79	78	77	75	74
	40	70	70	70	70	70	70	70	70	70	70	70	69	68
	50	63	63	63	63	63	63	63	63	63	63	63	63	63
	60	58	58	58	58	58	58	58	58	58	58	58	58	58
	70	54	54	54	54	54	54	54	54	54	54	54	54	54
	80	51	51	51	51	51	51	51	51	51	51	51	51	51
	90	48	48	48	48	48	48	48	48	48	48	48	48	48
Zone 2r	0	118	118	118	113	108	104	100	94	87	79	73	67	63
	10	100	100	100	100	100	100	100	94	87	79	73	67	63
	20	79	79	79	79	79	79	79	79	79	78	73	67	63
	30	79	79	79	79	79	79	79	79	79	78	73	67	63
	40	70	70	70	70	70	70	70	70	70	70	70	67	63
	50	63	63	63	63	63	63	63	63	63	63	63	63	63
	60	58	58	58	58	58	58	58	58	58	58	58	58	58
	70	54	54	54	54	54	54	54	54	54	54	54	54	54
	80	51	51	51	51	51	51	51	51	51	51	51	51	51
	90	48	48	48	48	48	48	48	48	48	48	48	48	48
Zones 2e & 3	0	118	118	114	109	105	101	97	91	82	75	69	64	61
	10	100	100	100	100	100	100	97	91	82	75	69	64	61
	20	79	79	79	79	79	79	79	79	79	75	69	64	61
	30	79	79	79	79	79	79	79	79	79	75	69	64	61
	40	70	70	70	70	70	70	70	70	70	70	69	64	61
	50	63	63	63	63	63	63	63	63	63	63	63	63	61
	60	58	58	58	58	58	58	58	58	58	58	58	58	58
	70	54	54	54	54	54	54	54	54	54	54	54	54	54
	80	51	51	51	51	51	51	51	51	51	51	51	51	51
	90	48	48	48	48	48	48	48	48	48	48	48	48	48

Notes:

1. Tables are based on critical rail span for load combinations as specified in chapter 2 of the ASCE 7-16 and allowable design loads per the 2015 Aluminum Design Manual.
2. Panels are assumed to be in landscape orientation with a maximum width of 42"

Structural ENGINUITY INC
Ingenuity in Engineering

SUNMODO®

Max Rail Spans for SunModo SMR100 System

Table 133b

Mean Roof Height: 15 < h ≤ 30 ft
Roof Angle: 7 < θ ≤ 20 degrees
Exposure Category: B

Panel Orientation: Landscape
North/South Support γ_E = 1.5
Roof Type : Hip h/B = ≥ 0.8

Roof Wind Zone	Ground Snow Load (psf)	Wind Speed (mph)												
		90	95	100	105	110	115	120	130	140	150	160	170	180
Zone 1	0	118	113	108	104	100	97	93	87	79	73	67	63	59
	10	100	100	100	100	100	97	93	87	79	73	67	63	59
	20	79	79	79	79	79	79	79	79	79	73	67	63	59
	30	79	79	79	79	79	79	79	79	79	73	67	63	59
	40	70	70	70	70	70	70	70	70	70	70	67	63	59
	50	63	63	63	63	63	63	63	63	63	63	63	63	59
	60	58	58	58	58	58	58	58	58	58	58	58	58	58
	70	54	54	54	54	54	54	54	54	54	54	54	54	54
	80	51	51	51	51	51	51	51	51	51	51	51	51	51
	90	48	48	48	48	48	48	48	48	48	48	48	48	48
Zone 2r	0	108	103	99	95	91	86	81	73	66	62	58	54	51
	10	100	100	99	95	91	86	81	73	66	62	58	54	51
	20	79	79	79	79	79	79	79	73	66	62	58	54	51
	30	79	79	79	79	79	79	79	73	66	62	58	54	51
	40	70	70	70	70	70	70	70	70	66	62	58	54	51
	50	63	63	63	63	63	63	63	63	63	62	58	54	51
	60	58	58	58	58	58	58	58	58	58	58	58	54	51
	70	54	54	54	54	54	54	54	54	54	54	54	54	51
	80	51	51	51	51	51	51	51	51	51	51	51	51	51
	90	48	48	48	48	48	48	48	48	48	48	48	48	48
Zones 2e & 3	0	104	100	95	91	87	82	77	69	64	59	55	52	49
	10	100	100	95	91	87	82	77	69	64	59	55	52	49
	20	79	79	79	79	79	79	77	69	64	59	55	52	49
	30	79	79	79	79	79	79	77	69	64	59	55	52	49
	40	70	70	70	70	70	70	70	69	64	59	55	52	49
	50	63	63	63	63	63	63	63	63	63	59	55	52	49
	60	58	58	58	58	58	58	58	58	58	58	55	52	49
	70	54	54	54	54	54	54	54	54	54	54	54	52	49
	80	51	51	51	51	51	51	51	51	51	51	51	51	49
	90	48	48	48	48	48	48	48	48	48	48	48	48	48

Notes:

1. Tables are based on critical rail span for load combinations as specified in chapter 2 of the ASCE 7-16 and allowable design loads per the 2015 Aluminum Design Manual.
2. Panels are assumed to be in landscape orientation with a maximum width of 42"

Structural ENGINUITY INC
Ingenuity in Engineering

SUNMODO®

Max Rail Spans for SunModo SMR100 System

Table 134a

Mean Roof Height: 15 < h ≤ 30 ft
Roof Angle: 7 < θ ≤ 20 degrees
Exposure Category: C

Panel Orientation: Landscape
North/South Support γ_E = 1
Roof Type : Hip h/B = ≥ 0.8

Roof Wind Zone	Ground Snow Load (psf)	Wind Speed (mph)												
		90	95	100	105	110	115	120	130	140	150	160	170	180
Zone 1	0	118	117	112	107	103	99	96	90	82	76	70	65	62
	10	100	100	100	100	99	98	96	90	82	76	70	65	62
	20	79	79	79	79	79	79	79	78	76	74	70	65	62
	30	79	79	79	79	79	79	79	78	76	74	70	65	62
	40	70	70	70	70	70	70	70	70	69	68	67	65	62
	50	63	63	63	63	63	63	63	63	63	63	62	61	60
	60	58	58	58	58	58	58	58	58	58	58	58	58	57
	70	54	54	54	54	54	54	54	54	54	54	54	54	54
	80	51	51	51	51	51	51	51	51	51	51	51	51	51
	90	48	48	48	48	48	48	48	48	48	48	48	48	48
Zone 2r	0	112	106	102	97	94	90	85	76	69	64	60	56	53
	10	100	100	100	97	94	90	85	76	69	64	60	56	53
	20	79	79	79	79	79	79	79	76	69	64	60	56	53
	30	79	79	79	79	79	79	79	76	69	64	60	56	53
	40	70	70	70	70	70	70	70	70	69	64	60	56	53
	50	63	63	63	63	63	63	63	63	63	63	60	56	53
	60	58	58	58	58	58	58	58	58	58	58	58	56	53
	70	54	54	54	54	54	54	54	54	54	54	54	54	53
	80	51	51	51	51	51	51	51	51	51	51	51	51	51
	90	48	48	48	48	48	48	48	48	48	48	48	48	48
Zones 2e & 3	0	108	103	98	94	90	86	81	72	66	61	57	54	51
	10	100	100	98	94	90	86	81	72	66	61	57	54	51
	20	79	79	79	79	79	79	79	72	66	61	57	54	51
	30	79	79	79	79	79	79	79	72	66	61	57	54	51
	40	70	70	70	70	70	70	70	70	66	61	57	54	51
	50	63	63	63	63	63	63	63	63	63	61	57	54	51
	60	58	58	58	58	58	58	58	58	58	58	57	54	51
	70	54	54	54	54	54	54	54	54	54	54	54	54	51
	80	51	51	51	51	51	51	51	51	51	51	51	51	51
	90	48	48	48	48	48	48	48	48	48	48	48	48	48

Notes:

1. Tables are based on critical rail span for load combinations as specified in chapter 2 of the ASCE 7-16 and allowable design loads per the 2015 Aluminum Design Manual.
2. Panels are assumed to be in landscape orientation with a maximum width of 42"

Structural ENGINUITY INC
Ingenuity in Engineering

SUNMODO®

Max Rail Spans for SunModo SMR100 System

Table 134b

Mean Roof Height: 15 < h ≤ 30 ft
Roof Angle: 7 < θ ≤ 20 degrees
Exposure Category: C

Panel Orientation: Landscape
North/South Support γ_E = 1.5
Roof Type : Hip h/B = ≥ 0.8

Roof Wind Zone	Ground Snow Load (psf)	Wind Speed (mph)												
		90	95	100	105	110	115	120	130	140	150	160	170	180
Zone 1	0	103	98	94	91	87	82	78	70	65	60	56	53	50
	10	100	98	94	91	87	82	78	70	65	60	56	53	50
	20	79	79	79	79	79	79	78	70	65	60	56	53	50
	30	79	79	79	79	79	79	78	70	65	60	56	53	50
	40	70	70	70	70	70	70	70	70	65	60	56	53	50
	50	63	63	63	63	63	63	63	63	63	60	56	53	50
	60	58	58	58	58	58	58	58	58	58	58	56	53	50
	70	54	54	54	54	54	54	54	54	54	54	54	53	50
	80	51	51	51	51	51	51	51	51	51	51	51	51	50
	90	48	48	48	48	48	48	48	48	48	48	48	48	48
Zone 2r	0	93	89	83	78	73	69	66	60	56	52	48	45	43
	10	93	89	83	78	73	69	66	60	56	52	48	45	43
	20	79	79	79	78	73	69	66	60	56	52	48	45	43
	30	79	79	79	78	73	69	66	60	56	52	48	45	43
	40	70	70	70	70	70	69	66	60	56	52	48	45	43
	50	63	63	63	63	63	63	63	60	56	52	48	45	43
	60	58	58	58	58	58	58	58	58	56	52	48	45	43
	70	54	54	54	54	54	54	54	54	54	52	48	45	43
	80	51	51	51	51	51	51	51	51	51	51	48	45	43
	90	48	48	48	48	48	48	48	48	48	48	48	45	43
Zones 2e & 3	0	90	84	79	74	69	66	63	58	53	50	46	44	41
	10	90	84	79	74	69	66	63	58	53	50	46	44	41
	20	79	79	79	74	69	66	63	58	53	50	46	44	41
	30	79	79	79	74	69	66	63	58	53	50	46	44	41
	40	70	70	70	70	69	66	63	58	53	50	46	44	41
	50	63	63	63	63	63	63	63	58	53	50	46	44	41
	60	58	58	58	58	58	58	58	58	53	50	46	44	41
	70	54	54	54	54	54	54	54	54	53	50	46	44	41
	80	51	51	51	51	51	51	51	51	51	50	46	44	41
	90	48	48	48	48	48	48	48	48	48	48	46	44	41

Notes:

1. Tables are based on critical rail span for load combinations as specified in chapter 2 of the ASCE 7-16 and allowable design loads per the 2015 Aluminum Design Manual.
2. Panels are assumed to be in landscape orientation with a maximum width of 42"

Structural ENGINUITY INC
Ingenuity in Engineering

SUNMODO®

Max Rail Spans for SunModo SMR100 System

Table 135a

Mean Roof Height: 15 < h ≤ 30 ft
Roof Angle: 7 < θ ≤ 20 degrees
Exposure Category: D

Panel Orientation: Landscape
North/South Support γ_E = 1
Roof Type : Hip h/B = ≥ 0.8

Roof Wind Zone	Ground Snow Load (psf)	Wind Speed (mph)												
		90	95	100	105	110	115	120	130	140	150	160	170	180
Zone 1	0	114	109	104	100	96	93	90	81	74	68	64	60	56
	10	100	100	100	98	96	93	90	81	74	68	64	60	56
	20	79	79	79	79	79	78	78	76	74	68	64	60	56
	30	79	79	79	79	79	78	78	76	74	68	64	60	56
	40	70	70	70	70	70	70	70	69	68	66	64	60	56
	50	63	63	63	63	63	63	63	63	63	62	61	60	56
	60	58	58	58	58	58	58	58	58	58	58	57	57	56
	70	54	54	54	54	54	54	54	54	54	54	54	54	53
	80	51	51	51	51	51	51	51	51	51	51	51	51	51
	90	48	48	48	48	48	48	48	48	48	48	48	48	48
Zone 2r	0	104	99	94	91	86	81	76	68	63	59	55	51	48
	10	100	99	94	91	86	81	76	68	63	59	55	51	48
	20	79	79	79	79	79	78	76	68	63	59	55	51	48
	30	79	79	79	79	79	78	76	68	63	59	55	51	48
	40	70	70	70	70	70	70	70	68	63	59	55	51	48
	50	63	63	63	63	63	63	63	63	63	59	55	51	48
	60	58	58	58	58	58	58	58	58	58	58	55	51	48
	70	54	54	54	54	54	54	54	54	54	54	54	51	48
	80	51	51	51	51	51	51	51	51	51	51	51	51	48
	90	48	48	48	48	48	48	48	48	48	48	48	48	48
Zones 2e & 3	0	100	95	91	87	81	76	72	65	60	56	53	49	46
	10	100	95	91	87	81	76	72	65	60	56	53	49	46
	20	79	79	79	79	79	76	72	65	60	56	53	49	46
	30	79	79	79	79	79	76	72	65	60	56	53	49	46
	40	70	70	70	70	70	70	70	65	60	56	53	49	46
	50	63	63	63	63	63	63	63	63	60	56	53	49	46
	60	58	58	58	58	58	58	58	58	58	56	53	49	46
	70	54	54	54	54	54	54	54	54	54	54	53	49	46
	80	51	51	51	51	51	51	51	51	51	51	51	49	46
	90	48	48	48	48	48	48	48	48	48	48	48	48	46

Notes:

1. Tables are based on critical rail span for load combinations as specified in chapter 2 of the ASCE 7-16 and allowable design loads per the 2015 Aluminum Design Manual.
2. Panels are assumed to be in landscape orientation with a maximum width of 42"

Structural ENGINUITY INC
Ingenuity in Engineering

SUNMODO®

Max Rail Spans for SunModo SMR100 System

Table 135b

Mean Roof Height: 15 < h ≤ 30 ft
Roof Angle: 7 < θ ≤ 20 degrees
Exposure Category: D

Panel Orientation: Landscape
North/South Support γ_E = 1.5
Roof Type : Hip h/B = ≥ 0.8

Roof Wind Zone	Ground Snow Load (psf)	Wind Speed (mph)												
		90	95	100	105	110	115	120	130	140	150	160	170	180
Zone 1	0	96	92	88	83	78	74	70	64	59	55	52	48	46
	10	96	92	88	83	78	74	70	64	59	55	52	48	46
	20	79	79	79	79	78	74	70	64	59	55	52	48	46
	30	79	79	79	79	78	74	70	64	59	55	52	48	46
	40	70	70	70	70	70	70	70	64	59	55	52	48	46
	50	63	63	63	63	63	63	63	63	59	55	52	48	46
	60	58	58	58	58	58	58	58	58	58	55	52	48	46
	70	54	54	54	54	54	54	54	54	54	54	52	48	46
	80	51	51	51	51	51	51	51	51	51	51	51	48	46
	90	48	48	48	48	48	48	48	48	48	48	48	48	46
Zone 2r	0	85	79	74	69	66	63	60	55	51	47	44	42	39
	10	85	79	74	69	66	63	60	55	51	47	44	42	39
	20	79	79	74	69	66	63	60	55	51	47	44	42	39
	30	79	79	74	69	66	63	60	55	51	47	44	42	39
	40	70	70	70	69	66	63	60	55	51	47	44	42	39
	50	63	63	63	63	63	63	60	55	51	47	44	42	39
	60	58	58	58	58	58	58	58	55	51	47	44	42	39
	70	54	54	54	54	54	54	54	54	51	47	44	42	39
	80	51	51	51	51	51	51	51	51	51	47	44	42	39
	90	48	48	48	48	48	48	48	48	48	47	44	42	39
Zones 2e & 3	0	81	75	70	66	63	60	57	53	49	45	43	40	38
	10	81	75	70	66	63	60	57	53	49	45	43	40	38
	20	79	75	70	66	63	60	57	53	49	45	43	40	38
	30	79	75	70	66	63	60	57	53	49	45	43	40	38
	40	70	70	70	66	63	60	57	53	49	45	43	40	38
	50	63	63	63	63	63	60	57	53	49	45	43	40	38
	60	58	58	58	58	58	58	57	53	49	45	43	40	38
	70	54	54	54	54	54	54	54	53	49	45	43	40	38
	80	51	51	51	51	51	51	51	51	49	45	43	40	38
	90	48	48	48	48	48	48	48	48	48	45	43	40	38

Notes:

1. Tables are based on critical rail span for load combinations as specified in chapter 2 of the ASCE 7-16 and allowable design loads per the 2015 Aluminum Design Manual.
2. Panels are assumed to be in landscape orientation with a maximum width of 42"

Structural ENGINUITY INC
Ingenuity in Engineering

SUNMODO®

Max Rail Spans for SunModo SMR100 System

Table 136a

Mean Roof Height: 15 < h ≤ 30 ft
Roof Angle: 7 < θ ≤ 20 degrees
Exposure Category: B

Panel Orientation: Landscape
North/South Support γ_E = 1
Roof Type : Hip h/B = ≤ 0.5

Roof Wind Zone	Ground Snow Load (psf)	Wind Speed (mph)												
		90	95	100	105	110	115	120	130	140	150	160	170	180
Zone 1	0	118	118	118	118	118	118	118	118	111	105	99	95	90
	10	100	100	100	100	100	100	100	98	96	94	92	90	87
	20	79	79	79	79	79	79	79	79	79	78	76	75	74
	30	79	79	79	79	79	79	79	79	79	78	76	75	74
	40	70	70	70	70	70	70	70	70	70	70	70	69	68
	50	63	63	63	63	63	63	63	63	63	63	63	63	63
	60	58	58	58	58	58	58	58	58	58	58	58	58	58
	70	54	54	54	54	54	54	54	54	54	54	54	54	54
	80	51	51	51	51	51	51	51	51	51	51	51	51	51
	90	48	48	48	48	48	48	48	48	48	48	48	48	48
Zone 2r	0	118	118	118	113	108	104	100	94	87	79	73	67	63
	10	100	100	100	100	100	100	100	94	87	79	73	67	63
	20	79	79	79	79	79	79	79	79	79	78	73	67	63
	30	79	79	79	79	79	79	79	79	79	78	73	67	63
	40	70	70	70	70	70	70	70	70	70	70	70	67	63
	50	63	63	63	63	63	63	63	63	63	63	63	63	63
	60	58	58	58	58	58	58	58	58	58	58	58	58	58
	70	54	54	54	54	54	54	54	54	54	54	54	54	54
	80	51	51	51	51	51	51	51	51	51	51	51	51	51
	90	48	48	48	48	48	48	48	48	48	48	48	48	48
Zones 2e & 3	0	118	118	118	118	118	118	114	106	99	93	88	81	75
	10	100	100	100	100	100	100	100	98	96	93	88	81	75
	20	79	79	79	79	79	79	79	79	79	78	76	75	74
	30	79	79	79	79	79	79	79	79	79	78	76	75	74
	40	70	70	70	70	70	70	70	70	70	70	70	69	68
	50	63	63	63	63	63	63	63	63	63	63	63	63	63
	60	58	58	58	58	58	58	58	58	58	58	58	58	58
	70	54	54	54	54	54	54	54	54	54	54	54	54	54
	80	51	51	51	51	51	51	51	51	51	51	51	51	51
	90	48	48	48	48	48	48	48	48	48	48	48	48	48

Notes:

1. Tables are based on critical rail span for load combinations as specified in chapter 2 of the ASCE 7-16 and allowable design loads per the 2015 Aluminum Design Manual.
2. Panels are assumed to be in landscape orientation with a maximum width of 42"

Structural ENGINUITY INC
Ingenuity in Engineering

SUNMODO®

Max Rail Spans for SunModo SMR100 System

Table 136b

Mean Roof Height: 15 < h ≤ 30 ft
Roof Angle: 7 < θ ≤ 20 degrees
Exposure Category: B

Panel Orientation: Landscape
North/South Support γ_E = 1.5
Roof Type : Hip h/B = ≤ 0.5

Roof Wind Zone	Ground Snow Load (psf)	Wind Speed (mph)												
		90	95	100	105	110	115	120	130	140	150	160	170	180
Zone 1	0	118	118	118	118	115	111	107	100	94	89	82	76	71
	10	100	100	100	100	100	100	100	98	94	89	82	76	71
	20	79	79	79	79	79	79	79	79	79	78	76	75	71
	30	79	79	79	79	79	79	79	79	79	78	76	75	71
	40	70	70	70	70	70	70	70	70	70	70	70	69	68
	50	63	63	63	63	63	63	63	63	63	63	63	63	63
	60	58	58	58	58	58	58	58	58	58	58	58	58	58
	70	54	54	54	54	54	54	54	54	54	54	54	54	54
	80	51	51	51	51	51	51	51	51	51	51	51	51	51
	90	48	48	48	48	48	48	48	48	48	48	48	48	48
Zone 2r	0	108	103	99	95	91	86	81	73	66	62	58	54	51
	10	100	100	99	95	91	86	81	73	66	62	58	54	51
	20	79	79	79	79	79	79	79	73	66	62	58	54	51
	30	79	79	79	79	79	79	79	73	66	62	58	54	51
	40	70	70	70	70	70	70	70	70	66	62	58	54	51
	50	63	63	63	63	63	63	63	63	63	62	58	54	51
	60	58	58	58	58	58	58	58	58	58	58	58	54	51
	70	54	54	54	54	54	54	54	54	54	54	54	54	51
	80	51	51	51	51	51	51	51	51	51	51	51	51	51
	90	48	48	48	48	48	48	48	48	48	48	48	48	48
Zones 2e & 3	0	118	117	112	107	102	99	95	89	80	73	67	63	59
	10	100	100	100	100	100	99	95	89	80	73	67	63	59
	20	79	79	79	79	79	79	79	79	79	73	67	63	59
	30	79	79	79	79	79	79	79	79	79	73	67	63	59
	40	70	70	70	70	70	70	70	70	70	70	67	63	59
	50	63	63	63	63	63	63	63	63	63	63	63	63	59
	60	58	58	58	58	58	58	58	58	58	58	58	58	58
	70	54	54	54	54	54	54	54	54	54	54	54	54	54
	80	51	51	51	51	51	51	51	51	51	51	51	51	51
	90	48	48	48	48	48	48	48	48	48	48	48	48	48

Notes:

1. Tables are based on critical rail span for load combinations as specified in chapter 2 of the ASCE 7-16 and allowable design loads per the 2015 Aluminum Design Manual.
2. Panels are assumed to be in landscape orientation with a maximum width of 42"

Structural ENGINUITY INC
Ingenuity in Engineering

SUNMODO®

Max Rail Spans for SunModo SMR100 System

Table 137a

Mean Roof Height: 15 < h ≤ 30 ft
Roof Angle: 7 < θ ≤ 20 degrees
Exposure Category: C

Panel Orientation: Landscape
North/South Support γ_E = 1
Roof Type : Hip h/B = ≤ 0.5

Roof Wind Zone	Ground Snow Load (psf)	Wind Speed (mph)												
		90	95	100	105	110	115	120	130	140	150	160	170	180
Zone 1	0	118	118	118	118	118	114	110	103	97	91	86	79	74
	10	100	100	100	99	98	97	96	93	90	88	85	79	74
	20	79	79	79	79	79	79	79	77	76	74	73	71	69
	30	79	79	79	79	79	79	79	77	76	74	73	71	69
	40	70	70	70	70	70	70	70	70	69	68	67	66	64
	50	63	63	63	63	63	63	63	63	63	63	62	61	60
	60	58	58	58	58	58	58	58	58	58	58	58	58	57
	70	54	54	54	54	54	54	54	54	54	54	54	54	54
	80	51	51	51	51	51	51	51	51	51	51	51	51	51
	90	48	48	48	48	48	48	48	48	48	48	48	48	48
Zone 2r	0	112	106	102	97	94	90	85	76	69	64	60	56	53
	10	100	100	100	97	94	90	85	76	69	64	60	56	53
	20	79	79	79	79	79	79	79	76	69	64	60	56	53
	30	79	79	79	79	79	79	79	76	69	64	60	56	53
	40	70	70	70	70	70	70	70	70	69	64	60	56	53
	50	63	63	63	63	63	63	63	63	63	63	60	56	53
	60	58	58	58	58	58	58	58	58	58	58	58	56	53
	70	54	54	54	54	54	54	54	54	54	54	54	54	53
	80	51	51	51	51	51	51	51	51	51	51	51	51	51
	90	48	48	48	48	48	48	48	48	48	48	48	48	48
Zones 2e & 3	0	118	118	115	110	106	102	98	91	84	76	70	65	62
	10	100	100	100	99	98	97	96	91	84	76	70	65	62
	20	79	79	79	79	79	79	79	77	76	74	70	65	62
	30	79	79	79	79	79	79	79	77	76	74	70	65	62
	40	70	70	70	70	70	70	70	70	69	68	67	65	62
	50	63	63	63	63	63	63	63	63	63	63	62	61	60
	60	58	58	58	58	58	58	58	58	58	58	58	58	57
	70	54	54	54	54	54	54	54	54	54	54	54	54	54
	80	51	51	51	51	51	51	51	51	51	51	51	51	51
	90	48	48	48	48	48	48	48	48	48	48	48	48	48

Notes:

1. Tables are based on critical rail span for load combinations as specified in chapter 2 of the ASCE 7-16 and allowable design loads per the 2015 Aluminum Design Manual.
2. Panels are assumed to be in landscape orientation with a maximum width of 42"

Structural ENGINUITY INC
Ingenuity in Engineering

SUNMODO®

Max Rail Spans for SunModo SMR100 System

Table 137b

Mean Roof Height: 15 < h ≤ 30 ft
Roof Angle: 7 < θ ≤ 20 degrees
Exposure Category: C

Panel Orientation: Landscape
North/South Support γ_E = 1.5
Roof Type : Hip h/B = ≤ 0.5

Roof Wind Zone	Ground Snow Load (psf)	Wind Speed (mph)												
		90	95	100	105	110	115	120	130	140	150	160	170	180
Zone 1	0	118	113	108	104	100	96	93	86	78	72	67	63	59
	10	100	100	100	99	98	96	93	86	78	72	67	63	59
	20	79	79	79	79	79	79	79	77	76	72	67	63	59
	30	79	79	79	79	79	79	79	77	76	72	67	63	59
	40	70	70	70	70	70	70	70	70	69	68	67	63	59
	50	63	63	63	63	63	63	63	63	63	63	62	61	59
	60	58	58	58	58	58	58	58	58	58	58	58	58	57
	70	54	54	54	54	54	54	54	54	54	54	54	54	54
	80	51	51	51	51	51	51	51	51	51	51	51	51	51
	90	48	48	48	48	48	48	48	48	48	48	48	48	48
Zone 2r	0	93	89	83	78	73	69	66	60	56	52	48	45	43
	10	93	89	83	78	73	69	66	60	56	52	48	45	43
	20	79	79	79	78	73	69	66	60	56	52	48	45	43
	30	79	79	79	78	73	69	66	60	56	52	48	45	43
	40	70	70	70	70	70	69	66	60	56	52	48	45	43
	50	63	63	63	63	63	63	63	60	56	52	48	45	43
	60	58	58	58	58	58	58	58	58	56	52	48	45	43
	70	54	54	54	54	54	54	54	54	54	52	48	45	43
	80	51	51	51	51	51	51	51	51	51	51	48	45	43
	90	48	48	48	48	48	48	48	48	48	48	48	45	43
Zones 2e & 3	0	105	101	96	92	88	83	79	71	65	60	56	53	50
	10	100	100	96	92	88	83	79	71	65	60	56	53	50
	20	79	79	79	79	79	79	79	71	65	60	56	53	50
	30	79	79	79	79	79	79	79	71	65	60	56	53	50
	40	70	70	70	70	70	70	70	70	65	60	56	53	50
	50	63	63	63	63	63	63	63	63	63	60	56	53	50
	60	58	58	58	58	58	58	58	58	58	58	56	53	50
	70	54	54	54	54	54	54	54	54	54	54	54	53	50
	80	51	51	51	51	51	51	51	51	51	51	51	51	50
	90	48	48	48	48	48	48	48	48	48	48	48	48	48

Notes:

1. Tables are based on critical rail span for load combinations as specified in chapter 2 of the ASCE 7-16 and allowable design loads per the 2015 Aluminum Design Manual.
2. Panels are assumed to be in landscape orientation with a maximum width of 42"

Structural ENGINUITY INC
Ingenuity in Engineering

SUNMODO®

Max Rail Spans for SunModo SMR100 System

Table 138a

Mean Roof Height: 15 < h ≤ 30 ft
Roof Angle: 7 < θ ≤ 20 degrees
Exposure Category: D

Panel Orientation: Landscape
North/South Support γ_E = 1
Roof Type : Hip h/B = ≤ 0.5

Roof Wind Zone	Ground Snow Load (psf)	Wind Speed (mph)												
		90	95	100	105	110	115	120	130	140	150	160	170	180
Zone 1	0	118	118	118	115	110	106	102	96	90	83	77	72	67
	10	100	100	98	97	96	94	93	90	87	83	77	72	67
	20	79	79	79	79	79	78	77	76	74	72	70	69	67
	30	79	79	79	79	79	78	77	76	74	72	70	69	67
	40	70	70	70	70	70	70	70	69	68	66	65	64	63
	50	63	63	63	63	63	63	63	63	63	62	61	60	59
	60	58	58	58	58	58	58	58	58	58	58	57	57	56
	70	54	54	54	54	54	54	54	54	54	54	54	54	53
	80	51	51	51	51	51	51	51	51	51	51	51	51	51
	90	48	48	48	48	48	48	48	48	48	48	48	48	48
Zone 2r	0	104	99	94	91	86	81	76	68	63	59	55	51	48
	10	100	99	94	91	86	81	76	68	63	59	55	51	48
	20	79	79	79	79	79	78	76	68	63	59	55	51	48
	30	79	79	79	79	79	78	76	68	63	59	55	51	48
	40	70	70	70	70	70	70	70	68	63	59	55	51	48
	50	63	63	63	63	63	63	63	63	63	59	55	51	48
	60	58	58	58	58	58	58	58	58	58	58	55	51	48
	70	54	54	54	54	54	54	54	54	54	54	54	51	48
	80	51	51	51	51	51	51	51	51	51	51	51	51	48
	90	48	48	48	48	48	48	48	48	48	48	48	48	48
Zones 2e & 3	0	117	112	107	102	98	94	91	83	75	68	64	60	56
	10	100	100	98	97	96	94	91	83	75	68	64	60	56
	20	79	79	79	79	79	78	77	76	74	68	64	60	56
	30	79	79	79	79	79	78	77	76	74	68	64	60	56
	40	70	70	70	70	70	70	70	69	68	66	64	60	56
	50	63	63	63	63	63	63	63	63	63	62	61	60	56
	60	58	58	58	58	58	58	58	58	58	58	57	57	56
	70	54	54	54	54	54	54	54	54	54	54	54	54	53
	80	51	51	51	51	51	51	51	51	51	51	51	51	51
	90	48	48	48	48	48	48	48	48	48	48	48	48	48

Notes:

1. Tables are based on critical rail span for load combinations as specified in chapter 2 of the ASCE 7-16 and allowable design loads per the 2015 Aluminum Design Manual.
2. Panels are assumed to be in landscape orientation with a maximum width of 42"

Structural ENGINUITY INC
Ingenuity in Engineering

SUNMODO®

Max Rail Spans for SunModo SMR100 System

Table 138b

Mean Roof Height: 15 < h ≤ 30 ft
Roof Angle: 7 < θ ≤ 20 degrees
Exposure Category: D

Panel Orientation: Landscape
North/South Support γ_E = 1.5
Roof Type : Hip h/B = ≤ 0.5

Roof Wind Zone	Ground Snow Load (psf)	Wind Speed (mph)												
		90	95	100	105	110	115	120	130	140	150	160	170	180
Zone 1	0	110	105	101	97	93	90	86	77	71	65	61	57	54
	10	100	100	98	97	93	90	86	77	71	65	61	57	54
	20	79	79	79	79	79	78	77	76	71	65	61	57	54
	30	79	79	79	79	79	78	77	76	71	65	61	57	54
	40	70	70	70	70	70	70	70	69	68	65	61	57	54
	50	63	63	63	63	63	63	63	63	63	62	61	57	54
	60	58	58	58	58	58	58	58	58	58	58	57	57	54
	70	54	54	54	54	54	54	54	54	54	54	54	54	53
	80	51	51	51	51	51	51	51	51	51	51	51	51	51
	90	48	48	48	48	48	48	48	48	48	48	48	48	48
Zone 2r	0	85	79	74	69	66	63	60	55	51	47	44	42	39
	10	85	79	74	69	66	63	60	55	51	47	44	42	39
	20	79	79	74	69	66	63	60	55	51	47	44	42	39
	30	79	79	74	69	66	63	60	55	51	47	44	42	39
	40	70	70	70	69	66	63	60	55	51	47	44	42	39
	50	63	63	63	63	63	63	60	55	51	47	44	42	39
	60	58	58	58	58	58	58	58	55	51	47	44	42	39
	70	54	54	54	54	54	54	54	54	51	47	44	42	39
	80	51	51	51	51	51	51	51	51	51	47	44	42	39
	90	48	48	48	48	48	48	48	48	48	47	44	42	39
Zones 2e & 3	0	98	94	90	84	79	74	70	64	59	55	52	48	46
	10	98	94	90	84	79	74	70	64	59	55	52	48	46
	20	79	79	79	79	79	74	70	64	59	55	52	48	46
	30	79	79	79	79	79	74	70	64	59	55	52	48	46
	40	70	70	70	70	70	70	70	64	59	55	52	48	46
	50	63	63	63	63	63	63	63	63	59	55	52	48	46
	60	58	58	58	58	58	58	58	58	58	55	52	48	46
	70	54	54	54	54	54	54	54	54	54	54	52	48	46
	80	51	51	51	51	51	51	51	51	51	51	51	48	46
	90	48	48	48	48	48	48	48	48	48	48	48	48	46

Notes:

1. Tables are based on critical rail span for load combinations as specified in chapter 2 of the ASCE 7-16 and allowable design loads per the 2015 Aluminum Design Manual.
2. Panels are assumed to be in landscape orientation with a maximum width of 42"

Structural ENGINUITY INC
Ingenuity in Engineering

SUNMODO®

Max Rail Spans for SunModo SMR100 System

Table 139a

Mean Roof Height: 15 < h ≤ 30 ft
Roof Angle: 20 < θ ≤ 27 degrees
Exposure Category: B

Panel Orientation: Landscape
North/South Support γ_E = 1
Roof Type : Hip

Roof Wind Zone	Ground Snow Load (psf)	Wind Speed (mph)												
		90	95	100	105	110	115	120	130	140	150	160	170	180
Zone 1	0	118	118	118	118	118	118	118	118	112	105	99	94	89
	10	107	107	107	107	107	107	107	107	106	103	99	94	89
	20	92	92	92	92	92	92	92	91	90	88	86	84	82
	30	79	79	79	79	79	79	79	79	79	78	77	75	74
	40	70	70	70	70	70	70	70	70	70	70	70	69	68
	50	63	63	63	63	63	63	63	63	63	63	63	63	63
	60	58	58	58	58	58	58	58	58	58	58	58	58	58
	70	54	54	54	54	54	54	54	54	54	54	54	54	54
	80	51	51	51	51	51	51	51	51	51	51	51	51	51
	90	48	48	48	48	48	48	48	48	48	48	48	48	48
Zones 2e, 2r, & 3	0	118	118	118	118	118	113	109	101	95	90	83	76	71
	10	107	107	107	107	107	107	107	101	95	90	83	76	71
	20	92	92	92	92	92	92	92	91	90	88	83	76	71
	30	79	79	79	79	79	79	79	79	79	78	77	75	71
	40	70	70	70	70	70	70	70	70	70	70	70	69	68
	50	63	63	63	63	63	63	63	63	63	63	63	63	63
	60	58	58	58	58	58	58	58	58	58	58	58	58	58
	70	54	54	54	54	54	54	54	54	54	54	54	54	54
	80	51	51	51	51	51	51	51	51	51	51	51	51	51
	90	48	48	48	48	48	48	48	48	48	48	48	48	48

Notes:

1. Tables are based on critical rail span for load combinations as specified in chapter 2 of the ASCE 7-16 and allowable design loads per the 2015 Aluminum Design Manual.
2. Panels are assumed to be in landscape orientation with a maximum width of 42"

Structural ENGINUITY INC
Ingenuity in Engineering

SUNMODO®

Max Rail Spans for SunModo SMR100 System

Table 139b

Mean Roof Height: 15 < h ≤ 30 ft
Roof Angle: 20 < θ ≤ 27 degrees
Exposure Category: B

Panel Orientation: Landscape
North/South Support γ_E = 1.5
Roof Type : Hip

Roof Wind Zone	Ground Snow Load (psf)	Wind Speed (mph)												
		90	95	100	105	110	115	120	130	140	150	160	170	180
Zone 1	0	118	118	118	118	116	111	107	100	93	88	81	74	68
	10	107	107	107	107	107	107	107	100	93	88	81	74	68
	20	92	92	92	92	92	92	92	91	90	88	81	74	68
	30	79	79	79	79	79	79	79	79	79	78	77	74	68
	40	70	70	70	70	70	70	70	70	70	70	70	69	68
	50	63	63	63	63	63	63	63	63	63	63	63	63	63
	60	58	58	58	58	58	58	58	58	58	58	58	58	58
	70	54	54	54	54	54	54	54	54	54	54	54	54	54
	80	51	51	51	51	51	51	51	51	51	51	51	51	51
	90	48	48	48	48	48	48	48	48	48	48	48	48	48
Zones 2e, 2r, & 3	0	118	112	107	102	98	95	91	84	76	69	64	60	56
	10	107	107	107	102	98	95	91	84	76	69	64	60	56
	20	92	92	92	92	92	92	91	84	76	69	64	60	56
	30	79	79	79	79	79	79	79	79	76	69	64	60	56
	40	70	70	70	70	70	70	70	70	70	69	64	60	56
	50	63	63	63	63	63	63	63	63	63	63	63	60	56
	60	58	58	58	58	58	58	58	58	58	58	58	58	56
	70	54	54	54	54	54	54	54	54	54	54	54	54	54
	80	51	51	51	51	51	51	51	51	51	51	51	51	51
	90	48	48	48	48	48	48	48	48	48	48	48	48	48

Notes:

1. Tables are based on critical rail span for load combinations as specified in chapter 2 of the ASCE 7-16 and allowable design loads per the 2015 Aluminum Design Manual.
2. Panels are assumed to be in landscape orientation with a maximum width of 42"

Structural ENGINUITY INC
Ingenuity in Engineering

SUNMODO®

Max Rail Spans for SunModo SMR100 System

Table 140a

Mean Roof Height: 15 < h ≤ 30 ft
Roof Angle: 20 < θ ≤ 27 degrees
Exposure Category: C

Panel Orientation: Landscape
North/South Support γ_E = 1
Roof Type : Hip

Roof Wind Zone	Ground Snow Load (psf)	Wind Speed (mph)												
		90	95	100	105	110	115	120	130	140	150	160	170	180
Zone 1	0	118	118	118	118	118	115	110	103	96	91	85	78	72
	10	107	107	107	107	107	107	105	102	96	91	85	78	72
	20	92	92	92	92	91	90	89	87	85	83	81	78	72
	30	79	79	79	79	79	79	79	77	76	74	73	71	69
	40	70	70	70	70	70	70	70	70	69	68	67	66	64
	50	63	63	63	63	63	63	63	63	63	63	62	61	60
	60	58	58	58	58	58	58	58	58	58	58	58	58	57
	70	54	54	54	54	54	54	54	54	54	54	54	54	54
	80	51	51	51	51	51	51	51	51	51	51	51	51	51
	90	48	48	48	48	48	48	48	48	48	48	48	48	48
Zones 2e, 2r, & 3	0	118	116	110	106	101	97	94	88	79	72	66	62	59
	10	107	107	107	106	101	97	94	88	79	72	66	62	59
	20	92	92	92	92	91	90	89	87	79	72	66	62	59
	30	79	79	79	79	79	79	79	77	76	72	66	62	59
	40	70	70	70	70	70	70	70	70	69	68	66	62	59
	50	63	63	63	63	63	63	63	63	63	63	62	61	59
	60	58	58	58	58	58	58	58	58	58	58	58	58	57
	70	54	54	54	54	54	54	54	54	54	54	54	54	54
	80	51	51	51	51	51	51	51	51	51	51	51	51	51
	90	48	48	48	48	48	48	48	48	48	48	48	48	48

Notes:

1. Tables are based on critical rail span for load combinations as specified in chapter 2 of the ASCE 7-16 and allowable design loads per the 2015 Aluminum Design Manual.
2. Panels are assumed to be in landscape orientation with a maximum width of 42"

Structural ENGINUITY INC
Ingenuity in Engineering

SUNMODO®

Max Rail Spans for SunModo SMR100 System

Table 140b

Mean Roof Height: 15 < h ≤ 30 ft
Roof Angle: 20 < θ ≤ 27 degrees
Exposure Category: C

Panel Orientation: Landscape
North/South Support γ_E = 1.5
Roof Type : Hip

Roof Wind Zone	Ground Snow Load (psf)	Wind Speed (mph)												
		90	95	100	105	110	115	120	130	140	150	160	170	180
Zone 1	0	118	114	108	104	99	96	92	85	77	70	65	61	57
	10	107	107	107	104	99	96	92	85	77	70	65	61	57
	20	92	92	92	92	91	90	89	85	77	70	65	61	57
	30	79	79	79	79	79	79	79	77	76	70	65	61	57
	40	70	70	70	70	70	70	70	70	69	68	65	61	57
	50	63	63	63	63	63	63	63	63	63	63	62	61	57
	60	58	58	58	58	58	58	58	58	58	58	58	58	57
	70	54	54	54	54	54	54	54	54	54	54	54	54	54
	80	51	51	51	51	51	51	51	51	51	51	51	51	51
	90	48	48	48	48	48	48	48	48	48	48	48	48	48
Zones 2e, 2r, & 3	0	101	96	92	89	84	79	74	67	62	57	53	50	47
	10	101	96	92	89	84	79	74	67	62	57	53	50	47
	20	92	92	92	89	84	79	74	67	62	57	53	50	47
	30	79	79	79	79	79	79	74	67	62	57	53	50	47
	40	70	70	70	70	70	70	70	67	62	57	53	50	47
	50	63	63	63	63	63	63	63	63	62	57	53	50	47
	60	58	58	58	58	58	58	58	58	58	57	53	50	47
	70	54	54	54	54	54	54	54	54	54	54	53	50	47
	80	51	51	51	51	51	51	51	51	51	51	51	50	47
	90	48	48	48	48	48	48	48	48	48	48	48	48	47

Notes:

1. Tables are based on critical rail span for load combinations as specified in chapter 2 of the ASCE 7-16 and allowable design loads per the 2015 Aluminum Design Manual.
2. Panels are assumed to be in landscape orientation with a maximum width of 42"

Structural ENGINUITY INC
Ingenuity in Engineering

SUNMODO®

Max Rail Spans for SunModo SMR100 System

Table 141a

Mean Roof Height: 15 < h ≤ 30 ft
Roof Angle: 20 < θ ≤ 27 degrees
Exposure Category: D

Panel Orientation: Landscape
North/South Support γ_E = 1
Roof Type : Hip

Roof Wind Zone	Ground Snow Load (psf)	Wind Speed (mph)												
		90	95	100	105	110	115	120	130	140	150	160	170	180
Zone 1	0	118	118	118	116	111	106	102	95	89	82	75	69	65
	10	107	107	107	107	105	104	102	95	89	82	75	69	65
	20	92	92	91	90	89	88	87	85	82	80	75	69	65
	30	79	79	79	79	79	78	77	76	74	72	70	69	65
	40	70	70	70	70	70	70	70	69	68	66	65	64	62
	50	63	63	63	63	63	63	63	63	63	62	61	60	59
	60	58	58	58	58	58	58	58	58	58	58	57	57	56
	70	54	54	54	54	54	54	54	54	54	54	54	54	53
	80	51	51	51	51	51	51	51	51	51	51	51	51	51
	90	48	48	48	48	48	48	48	48	48	48	48	48	48
Zones 2e, 2r, & 3	0	112	107	102	98	94	91	87	78	71	65	61	57	54
	10	107	107	102	98	94	91	87	78	71	65	61	57	54
	20	92	92	91	90	89	88	87	78	71	65	61	57	54
	30	79	79	79	79	79	78	77	76	71	65	61	57	54
	40	70	70	70	70	70	70	70	69	68	65	61	57	54
	50	63	63	63	63	63	63	63	63	63	62	61	57	54
	60	58	58	58	58	58	58	58	58	58	58	57	57	54
	70	54	54	54	54	54	54	54	54	54	54	54	54	53
	80	51	51	51	51	51	51	51	51	51	51	51	51	51
	90	48	48	48	48	48	48	48	48	48	48	48	48	48

Notes:

1. Tables are based on critical rail span for load combinations as specified in chapter 2 of the ASCE 7-16 and allowable design loads per the 2015 Aluminum Design Manual.
2. Panels are assumed to be in landscape orientation with a maximum width of 42"

Structural ENGINUITY INC
Ingenuity in Engineering

SUNMODO®

Max Rail Spans for SunModo SMR100 System

Table 141b

Mean Roof Height: 15 < h ≤ 30 ft
Roof Angle: 20 < θ ≤ 27 degrees
Exposure Category: D

Panel Orientation: Landscape
North/South Support γ_E = 1.5
Roof Type : Hip

Roof Wind Zone	Ground Snow Load (psf)	Wind Speed (mph)												
		90	95	100	105	110	115	120	130	140	150	160	170	180
Zone 1	0	110	105	100	96	92	89	85	76	68	63	59	55	52
	10	107	105	100	96	92	89	85	76	68	63	59	55	52
	20	92	92	91	90	89	88	85	76	68	63	59	55	52
	30	79	79	79	79	79	78	77	76	68	63	59	55	52
	40	70	70	70	70	70	70	70	69	68	63	59	55	52
	50	63	63	63	63	63	63	63	63	63	62	59	55	52
	60	58	58	58	58	58	58	58	58	58	58	57	55	52
	70	54	54	54	54	54	54	54	54	54	54	54	54	52
	80	51	51	51	51	51	51	51	51	51	51	51	51	51
	90	48	48	48	48	48	48	48	48	48	48	48	48	48
Zones 2e, 2r, & 3	0	94	90	85	79	74	70	66	61	56	52	49	46	43
	10	94	90	85	79	74	70	66	61	56	52	49	46	43
	20	92	90	85	79	74	70	66	61	56	52	49	46	43
	30	79	79	79	79	74	70	66	61	56	52	49	46	43
	40	70	70	70	70	70	70	66	61	56	52	49	46	43
	50	63	63	63	63	63	63	63	61	56	52	49	46	43
	60	58	58	58	58	58	58	58	58	56	52	49	46	43
	70	54	54	54	54	54	54	54	54	54	52	49	46	43
	80	51	51	51	51	51	51	51	51	51	51	49	46	43
	90	48	48	48	48	48	48	48	48	48	48	48	46	43

Notes:

1. Tables are based on critical rail span for load combinations as specified in chapter 2 of the ASCE 7-16 and allowable design loads per the 2015 Aluminum Design Manual.
2. Panels are assumed to be in landscape orientation with a maximum width of 42"

Structural ENGINUITY INC
Ingenuity in Engineering

SUNMODO®

Max Rail Spans for SunModo SMR100 System

Table 142a

Mean Roof Height: 15 < h ≤ 30 ft
Roof Angle: 27 < θ ≤ 45 degrees
Exposure Category: B

Panel Orientation: Landscape
North/South Support γ_E = 1
Roof Type : Hip

Roof Wind Zone	Ground Snow Load (psf)	Wind Speed (mph)												
		90	95	100	105	110	115	120	130	140	150	160	170	180
Zone 1	0	118	118	118	118	118	118	118	114	106	99	91	85	79
	10	107	107	107	107	107	107	107	107	106	99	91	85	79
	20	93	93	93	93	93	93	93	93	91	90	88	85	79
	30	81	81	81	81	81	81	81	81	81	80	79	78	76
	40	72	72	72	72	72	72	72	72	72	72	72	71	70
	50	66	66	66	66	66	66	66	66	66	66	66	66	65
	60	61	61	61	61	61	61	61	61	61	61	61	61	61
	70	57	57	57	57	57	57	57	57	57	57	57	57	57
	80	53	53	53	53	53	53	53	53	53	53	53	53	53
	90	51	51	51	51	51	51	51	51	51	51	51	51	51
Zone 2e	0	118	118	118	118	118	118	117	108	99	90	83	76	70
	10	107	107	107	107	107	107	107	107	99	90	83	76	70
	20	93	93	93	93	93	93	93	93	91	90	83	76	70
	30	81	81	81	81	81	81	81	81	81	80	79	76	70
	40	72	72	72	72	72	72	72	72	72	72	72	71	70
	50	66	66	66	66	66	66	66	66	66	66	66	66	65
	60	61	61	61	61	61	61	61	61	61	61	61	61	61
	70	57	57	57	57	57	57	57	57	57	57	57	57	57
	80	53	53	53	53	53	53	53	53	53	53	53	53	53
	90	51	51	51	51	51	51	51	51	51	51	51	51	51
Zone 2r	0	118	118	118	116	111	107	102	92	84	77	71	66	62
	10	107	107	107	107	107	107	102	92	84	77	71	66	62
	20	93	93	93	93	93	93	93	92	84	77	71	66	62
	30	81	81	81	81	81	81	81	81	81	77	71	66	62
	40	72	72	72	72	72	72	72	72	72	72	71	66	62
	50	66	66	66	66	66	66	66	66	66	66	66	66	62
	60	61	61	61	61	61	61	61	61	61	61	61	61	61
	70	57	57	57	57	57	57	57	57	57	57	57	57	57
	80	53	53	53	53	53	53	53	53	53	53	53	53	53
	90	51	51	51	51	51	51	51	51	51	51	51	51	51
Zone 3	0	118	118	118	117	111	106	101	90	81	74	68	63	59
	10	107	107	107	107	107	106	101	90	81	74	68	63	59
	20	93	93	93	93	93	93	93	90	81	74	68	63	59
	30	81	81	81	81	81	81	81	81	81	74	68	63	59
	40	72	72	72	72	72	72	72	72	72	72	68	63	59
	50	66	66	66	66	66	66	66	66	66	66	66	63	59
	60	61	61	61	61	61	61	61	61	61	61	61	61	59
	70	57	57	57	57	57	57	57	57	57	57	57	57	57
	80	53	53	53	53	53	53	53	53	53	53	53	53	53
	90	51	51	51	51	51	51	51	51	51	51	51	51	51

Notes:

1. Tables are based on critical rail span for load combinations as specified in chapter 2 of the ASCE 7-16 and allowable design loads per the 2015 Aluminum Design Manual.
2. Panels are assumed to be in landscape orientation with a maximum width of 42"

Structural ENGINUITY INC
Ingenuity in Engineering

SUNMODO®

Max Rail Spans for SunModo SMR100 System

Table 142b

Mean Roof Height: 15 < h ≤ 30 ft
Roof Angle: 27 < θ ≤ 45 degrees
Exposure Category: B

Panel Orientation: Landscape
North/South Support γ_E = 1.5
Roof Type : Hip

Roof Wind Zone	Ground Snow Load (psf)	Wind Speed (mph)												
		90	95	100	105	110	115	120	130	140	150	160	170	180
Zone 1	0	118	118	118	115	110	106	101	92	84	77	71	66	63
	10	107	107	107	107	107	106	101	92	84	77	71	66	63
	20	93	93	93	93	93	93	93	92	84	77	71	66	63
	30	81	81	81	81	81	81	81	81	81	77	71	66	63
	40	72	72	72	72	72	72	72	72	72	72	71	66	63
	50	66	66	66	66	66	66	66	66	66	66	66	66	63
	60	61	61	61	61	61	61	61	61	61	61	61	61	61
	70	57	57	57	57	57	57	57	57	57	57	57	57	57
	80	53	53	53	53	53	53	53	53	53	53	53	53	53
	90	51	51	51	51	51	51	51	51	51	51	51	51	51
Zone 2e	0	118	118	115	109	105	99	93	83	75	69	63	59	55
	10	107	107	107	107	105	99	93	83	75	69	63	59	55
	20	93	93	93	93	93	93	93	83	75	69	63	59	55
	30	81	81	81	81	81	81	81	81	75	69	63	59	55
	40	72	72	72	72	72	72	72	72	72	69	63	59	55
	50	66	66	66	66	66	66	66	66	66	66	63	59	55
	60	61	61	61	61	61	61	61	61	61	61	61	59	55
	70	57	57	57	57	57	57	57	57	57	57	57	57	55
	80	53	53	53	53	53	53	53	53	53	53	53	53	53
	90	51	51	51	51	51	51	51	51	51	51	51	51	51
Zone 2r	0	111	106	100	94	88	83	79	71	65	60	56	52	49
	10	107	106	100	94	88	83	79	71	65	60	56	52	49
	20	93	93	93	93	88	83	79	71	65	60	56	52	49
	30	81	81	81	81	81	81	79	71	65	60	56	52	49
	40	72	72	72	72	72	72	72	71	65	60	56	52	49
	50	66	66	66	66	66	66	66	66	65	60	56	52	49
	60	61	61	61	61	61	61	61	61	61	60	56	52	49
	70	57	57	57	57	57	57	57	57	57	57	56	52	49
	80	53	53	53	53	53	53	53	53	53	53	53	52	49
	90	51	51	51	51	51	51	51	51	51	51	51	51	49
Zone 3	0	111	105	98	92	86	81	76	68	62	57	53	49	46
	10	107	105	98	92	86	81	76	68	62	57	53	49	46
	20	93	93	93	92	86	81	76	68	62	57	53	49	46
	30	81	81	81	81	81	81	76	68	62	57	53	49	46
	40	72	72	72	72	72	72	72	68	62	57	53	49	46
	50	66	66	66	66	66	66	66	66	62	57	53	49	46
	60	61	61	61	61	61	61	61	61	61	57	53	49	46
	70	57	57	57	57	57	57	57	57	57	57	53	49	46
	80	53	53	53	53	53	53	53	53	53	53	53	49	46
	90	51	51	51	51	51	51	51	51	51	51	51	49	46

Notes:

1. Tables are based on critical rail span for load combinations as specified in chapter 2 of the ASCE 7-16 and allowable design loads per the 2015 Aluminum Design Manual.
2. Panels are assumed to be in landscape orientation with a maximum width of 42"

Structural ENGINUITY INC
Ingenuity in Engineering

SUNMODO®

Max Rail Spans for SunModo SMR100 System

Table 143a

Mean Roof Height: 15 < h ≤ 30 ft
Roof Angle: 27 < θ ≤ 45 degrees
Exposure Category: C

Panel Orientation: Landscape
North/South Support γ_E = 1
Roof Type : Hip

Roof Wind Zone	Ground Snow Load (psf)	Wind Speed (mph)												
		90	95	100	105	110	115	120	130	140	150	160	170	180
Zone 1	0	118	118	118	118	114	109	105	96	87	80	74	69	65
	10	107	107	107	107	107	107	105	96	87	80	74	69	65
	20	93	93	93	93	93	92	91	89	87	80	74	69	65
	30	81	81	81	81	81	81	81	80	78	77	74	69	65
	40	72	72	72	72	72	72	72	72	72	70	69	68	65
	50	66	66	66	66	66	66	66	66	66	65	64	63	62
	60	61	61	61	61	61	61	61	61	61	61	61	60	59
	70	57	57	57	57	57	57	57	57	57	57	57	57	56
	80	53	53	53	53	53	53	53	53	53	53	53	53	53
	90	51	51	51	51	51	51	51	51	51	51	51	51	51
Zone 2e	0	118	118	118	113	108	103	97	87	79	72	66	62	58
	10	107	107	107	107	107	103	97	87	79	72	66	62	58
	20	93	93	93	93	93	92	91	87	79	72	66	62	58
	30	81	81	81	81	81	81	81	80	78	72	66	62	58
	40	72	72	72	72	72	72	72	72	72	70	66	62	58
	50	66	66	66	66	66	66	66	66	66	65	64	62	58
	60	61	61	61	61	61	61	61	61	61	61	61	60	58
	70	57	57	57	57	57	57	57	57	57	57	57	57	56
	80	53	53	53	53	53	53	53	53	53	53	53	53	53
	90	51	51	51	51	51	51	51	51	51	51	51	51	51
Zone 2r	0	115	109	104	98	92	87	82	74	68	63	58	54	51
	10	107	107	104	98	92	87	82	74	68	63	58	54	51
	20	93	93	93	93	92	87	82	74	68	63	58	54	51
	30	81	81	81	81	81	81	81	74	68	63	58	54	51
	40	72	72	72	72	72	72	72	72	68	63	58	54	51
	50	66	66	66	66	66	66	66	66	66	63	58	54	51
	60	61	61	61	61	61	61	61	61	61	61	58	54	51
	70	57	57	57	57	57	57	57	57	57	57	57	54	51
	80	53	53	53	53	53	53	53	53	53	53	53	53	51
	90	51	51	51	51	51	51	51	51	51	51	51	51	51
Zone 3	0	115	109	103	96	90	85	80	71	65	60	55	51	48
	10	107	107	103	96	90	85	80	71	65	60	55	51	48
	20	93	93	93	93	90	85	80	71	65	60	55	51	48
	30	81	81	81	81	81	81	80	71	65	60	55	51	48
	40	72	72	72	72	72	72	72	71	65	60	55	51	48
	50	66	66	66	66	66	66	66	66	65	60	55	51	48
	60	61	61	61	61	61	61	61	61	61	60	55	51	48
	70	57	57	57	57	57	57	57	57	57	57	55	51	48
	80	53	53	53	53	53	53	53	53	53	53	53	51	48
	90	51	51	51	51	51	51	51	51	51	51	51	51	48

Notes:

1. Tables are based on critical rail span for load combinations as specified in chapter 2 of the ASCE 7-16 and allowable design loads per the 2015 Aluminum Design Manual.
2. Panels are assumed to be in landscape orientation with a maximum width of 42"

Structural ENGINUITY INC
Ingenuity in Engineering

SUNMODO®

Max Rail Spans for SunModo SMR100 System

Table 143b

Mean Roof Height: 15 < h ≤ 30 ft
Roof Angle: 27 < θ ≤ 45 degrees
Exposure Category: C

Panel Orientation: Landscape
North/South Support γ_E = 1.5
Roof Type : Hip

Roof Wind Zone	Ground Snow Load (psf)	Wind Speed (mph)												
		90	95	100	105	110	115	120	130	140	150	160	170	180
Zone 1	0	113	108	103	97	92	87	82	75	68	64	60	56	53
	10	107	107	103	97	92	87	82	75	68	64	60	56	53
	20	93	93	93	93	92	87	82	75	68	64	60	56	53
	30	81	81	81	81	81	81	81	75	68	64	60	56	53
	40	72	72	72	72	72	72	72	72	68	64	60	56	53
	50	66	66	66	66	66	66	66	66	66	64	60	56	53
	60	61	61	61	61	61	61	61	61	61	61	60	56	53
	70	57	57	57	57	57	57	57	57	57	57	57	56	53
	80	53	53	53	53	53	53	53	53	53	53	53	53	53
	90	51	51	51	51	51	51	51	51	51	51	51	51	51
Zone 2e	0	108	102	95	89	83	78	74	66	61	56	52	48	45
	10	107	102	95	89	83	78	74	66	61	56	52	48	45
	20	93	93	93	89	83	78	74	66	61	56	52	48	45
	30	81	81	81	81	81	78	74	66	61	56	52	48	45
	40	72	72	72	72	72	72	72	66	61	56	52	48	45
	50	66	66	66	66	66	66	66	66	61	56	52	48	45
	60	61	61	61	61	61	61	61	61	61	56	52	48	45
	70	57	57	57	57	57	57	57	57	57	56	52	48	45
	80	53	53	53	53	53	53	53	53	53	53	52	48	45
	90	51	51	51	51	51	51	51	51	51	51	51	48	45
Zone 2r	0	92	86	80	75	71	67	64	59	54	50	46	43	41
	10	92	86	80	75	71	67	64	59	54	50	46	43	41
	20	92	86	80	75	71	67	64	59	54	50	46	43	41
	30	81	81	80	75	71	67	64	59	54	50	46	43	41
	40	72	72	72	72	71	67	64	59	54	50	46	43	41
	50	66	66	66	66	66	66	64	59	54	50	46	43	41
	60	61	61	61	61	61	61	61	59	54	50	46	43	41
	70	57	57	57	57	57	57	57	57	54	50	46	43	41
	80	53	53	53	53	53	53	53	53	53	50	46	43	41
	90	51	51	51	51	51	51	51	51	51	50	46	43	41
Zone 3	0	90	83	77	72	68	64	61	55	51	47	43	40	32
	10	90	83	77	72	68	64	61	55	51	47	43	40	32
	20	90	83	77	72	68	64	61	55	51	47	43	40	32
	30	81	81	77	72	68	64	61	55	51	47	43	40	32
	40	72	72	72	72	68	64	61	55	51	47	43	40	32
	50	66	66	66	66	66	64	61	55	51	47	43	40	32
	60	61	61	61	61	61	61	61	55	51	47	43	40	32
	70	57	57	57	57	57	57	57	55	51	47	43	40	32
	80	53	53	53	53	53	53	53	53	51	47	43	40	32
	90	51	51	51	51	51	51	51	51	51	47	43	40	32

Notes:

1. Tables are based on critical rail span for load combinations as specified in chapter 2 of the ASCE 7-16 and allowable design loads per the 2015 Aluminum Design Manual.
2. Panels are assumed to be in landscape orientation with a maximum width of 42"

Structural ENGINUITY INC
Ingenuity in Engineering

SUNMODO®

Max Rail Spans for SunModo SMR100 System

Table 144a

Mean Roof Height: 15 < h ≤ 30 ft
Roof Angle: 27 < θ ≤ 45 degrees
Exposure Category: D

Panel Orientation: Landscape
North/South Support γ_E = 1
Roof Type : Hip

Roof Wind Zone	Ground Snow Load (psf)	Wind Speed (mph)												
		90	95	100	105	110	115	120	130	140	150	160	170	180
Zone 1	0	118	118	115	110	105	100	95	86	79	72	67	63	60
	10	107	107	107	107	105	100	95	86	79	72	67	63	60
	20	93	93	93	92	91	90	89	86	79	72	67	63	60
	30	81	81	81	81	81	80	80	78	76	72	67	63	60
	40	72	72	72	72	72	72	72	71	70	69	67	63	60
	50	66	66	66	66	66	66	66	66	65	64	63	62	60
	60	61	61	61	61	61	61	61	61	61	60	59	58	57
	70	57	57	57	57	57	57	57	57	57	57	56	56	55
	80	53	53	53	53	53	53	53	53	53	53	53	53	52
	90	51	51	51	51	51	51	51	51	51	51	51	51	50
Zone 2e	0	118	115	109	104	98	92	87	78	70	65	60	56	52
	10	107	107	107	104	98	92	87	78	70	65	60	56	52
	20	93	93	93	92	91	90	87	78	70	65	60	56	52
	30	81	81	81	81	81	80	80	78	70	65	60	56	52
	40	72	72	72	72	72	72	72	71	70	65	60	56	52
	50	66	66	66	66	66	66	66	66	65	64	60	56	52
	60	61	61	61	61	61	61	61	61	61	60	59	56	52
	70	57	57	57	57	57	57	57	57	57	57	56	56	52
	80	53	53	53	53	53	53	53	53	53	53	53	53	52
	90	51	51	51	51	51	51	51	51	51	51	51	51	50
Zone 2r	0	106	100	94	88	83	78	74	67	62	57	53	49	46
	10	106	100	94	88	83	78	74	67	62	57	53	49	46
	20	93	93	93	88	83	78	74	67	62	57	53	49	46
	30	81	81	81	81	81	78	74	67	62	57	53	49	46
	40	72	72	72	72	72	72	72	67	62	57	53	49	46
	50	66	66	66	66	66	66	66	66	62	57	53	49	46
	60	61	61	61	61	61	61	61	61	61	57	53	49	46
	70	57	57	57	57	57	57	57	57	57	57	53	49	46
	80	53	53	53	53	53	53	53	53	53	53	53	49	46
	90	51	51	51	51	51	51	51	51	51	51	51	49	46
Zone 3	0	106	98	92	85	80	75	71	64	58	54	50	46	43
	10	106	98	92	85	80	75	71	64	58	54	50	46	43
	20	93	93	92	85	80	75	71	64	58	54	50	46	43
	30	81	81	81	81	80	75	71	64	58	54	50	46	43
	40	72	72	72	72	72	72	71	64	58	54	50	46	43
	50	66	66	66	66	66	66	66	64	58	54	50	46	43
	60	61	61	61	61	61	61	61	61	58	54	50	46	43
	70	57	57	57	57	57	57	57	57	57	54	50	46	43
	80	53	53	53	53	53	53	53	53	53	53	50	46	43
	90	51	51	51	51	51	51	51	51	51	51	50	46	43

Notes:

1. Tables are based on critical rail span for load combinations as specified in chapter 2 of the ASCE 7-16 and allowable design loads per the 2015 Aluminum Design Manual.
2. Panels are assumed to be in landscape orientation with a maximum width of 42"

Structural ENGINUITY INC
Ingenuity in Engineering

SUNMODO®

Max Rail Spans for SunModo SMR100 System

Table 144b

Mean Roof Height: 15 < h ≤ 30 ft
Roof Angle: 27 < θ ≤ 45 degrees
Exposure Category: D

Panel Orientation: Landscape
North/South Support γ_E = 1.5
Roof Type : Hip

Roof Wind Zone	Ground Snow Load (psf)	Wind Speed (mph)												
		90	95	100	105	110	115	120	130	140	150	160	170	180
Zone 1	0	105	99	93	88	83	78	74	67	63	59	55	52	49
	10	105	99	93	88	83	78	74	67	63	59	55	52	49
	20	93	93	93	88	83	78	74	67	63	59	55	52	49
	30	81	81	81	81	81	78	74	67	63	59	55	52	49
	40	72	72	72	72	72	72	72	67	63	59	55	52	49
	50	66	66	66	66	66	66	66	66	63	59	55	52	49
	60	61	61	61	61	61	61	61	61	61	59	55	52	49
	70	57	57	57	57	57	57	57	57	57	57	55	52	49
	80	53	53	53	53	53	53	53	53	53	53	53	52	49
	90	51	51	51	51	51	51	51	51	51	51	51	51	49
Zone 2e	0	98	91	84	79	74	70	66	60	55	51	47	44	41
	10	98	91	84	79	74	70	66	60	55	51	47	44	41
	20	93	91	84	79	74	70	66	60	55	51	47	44	41
	30	81	81	81	79	74	70	66	60	55	51	47	44	41
	40	72	72	72	72	72	70	66	60	55	51	47	44	41
	50	66	66	66	66	66	66	66	60	55	51	47	44	41
	60	61	61	61	61	61	61	61	60	55	51	47	44	41
	70	57	57	57	57	57	57	57	57	55	51	47	44	41
	80	53	53	53	53	53	53	53	53	53	51	47	44	41
	90	51	51	51	51	51	51	51	51	51	51	47	44	41
Zone 2r	0	83	77	72	68	64	61	58	53	49	45	42	39	37
	10	83	77	72	68	64	61	58	53	49	45	42	39	37
	20	83	77	72	68	64	61	58	53	49	45	42	39	37
	30	81	77	72	68	64	61	58	53	49	45	42	39	37
	40	72	72	72	68	64	61	58	53	49	45	42	39	37
	50	66	66	66	66	64	61	58	53	49	45	42	39	37
	60	61	61	61	61	61	61	58	53	49	45	42	39	37
	70	57	57	57	57	57	57	57	53	49	45	42	39	37
	80	53	53	53	53	53	53	53	53	49	45	42	39	37
	90	51	51	51	51	51	51	51	51	49	45	42	39	37
Zone 3	0	80	74	69	65	61	58	55	50	46	42	39	31	29
	10	80	74	69	65	61	58	55	50	46	42	39	31	29
	20	80	74	69	65	61	58	55	50	46	42	39	31	29
	30	80	74	69	65	61	58	55	50	46	42	39	31	29
	40	72	72	69	65	61	58	55	50	46	42	39	31	29
	50	66	66	66	65	61	58	55	50	46	42	39	31	29
	60	61	61	61	61	61	58	55	50	46	42	39	31	29
	70	57	57	57	57	57	57	55	50	46	42	39	31	29
	80	53	53	53	53	53	53	53	50	46	42	39	31	29
	90	51	51	51	51	51	51	51	50	46	42	39	31	29

Notes:

1. Tables are based on critical rail span for load combinations as specified in chapter 2 of the ASCE 7-16 and allowable design loads per the 2015 Aluminum Design Manual.
2. Panels are assumed to be in landscape orientation with a maximum width of 42"