Intertek-ATI
130 Derry Court
York, PA 17406

Tel +1 717 764 7700
Fax +1 717 764 4129
intertek.com

Total Quality. Assured.

TAS 100(A)-95 TEST REPORT

Rendered to:

SUNMODO CORPORATION

SERIES/MODEL: EZ3 Roof Mount
TYPE: Solar Panel Roof Attachment

This report contains in its entirety:

Cover Page:	**1 Page**
Report Body:	**5 Pages**
Photographs:	**2 Pages**
Drawings:	**4 Pages**

JOSEPH A. REED
LICENSE
No. 58920
STATE OF
FLORIDA
PROFESSIONAL ENGINEER

Digitally Signed by: Joseph A. Reed

2018.08.23 10:04:36 -04'00'

Report No:	**I6899.02-109-18**
Test Date:	**7/25/18**
And:	**7/26/18**
Report Date:	**8/17/18**
Revision 1:	**8/22/18**
Expiration Date:	**7/26/28**
Miami-Dade County Notification No.:	**ATI 18031**

Intertek-ATI
130 Derry Court
York, PA 17406

Tel +1 717 764 7700
Fax +1 717 764 4129
intertek.com

TAS 100(A)-95 TEST REPORT

Rendered to:

SunModo Corporation
14800 NE 65th Street
Vancouver, Washington 98682

Report No:	I6899.02-109-18
Test Date:	7/25/18
And:	7/26/18
Report Date:	8/17/18
Revision 1:	8/22/18
Expiration Date:	7/26/28
Miami-Dade County Notification No.:	ATI 18031

Series/Model: EZ3 Roof Mount

Project Summary: Intertek B&C was contracted by SunModo Corporation to conduct wind driven rain testing per Florida Building Code Test Protocols for the High Velocity Hurricane Zone (HVHZ) – Testing Application Standard TAS 100(A)-95 on EZ3 Roof Mount solar panel roof attachment. All test data, photos, and results are included herein. The sample was provided by the client.

Test Specification: All tests were performed in accordance with the referenced specification, unless stated otherwise.

> TAS 100(A)-95, *Test Procedure for Wind and Wind Driven Rain Resistance and/or Increased Windspeed Resistance of Soffit Ventilation Strip and Continuous or Intermittent Ventilation System Installed at the Ridge Area.*

Calibration: Reference Intertek B&C Report No. I2490.03-109-18, dated 04/30/18 for calibration data.

Test Specimen Description:

Roof Deck Description: An 8' 0" wide by 6' 0" long roof deck with 2:12 slope was utilized. The roof deck consisted of #2 Spruce-Pine-Fir nominal 2x6 rafters sheathed with 15/32" plywood. The rafters were spaced 24" on center. The plywood was secured to the rafters with 1-5/8" drywall screws spaced 6" on center around the perimeter and 12" on center at the intermediate supports. The plywood sheathing was covered with self-stick ice and water shield underlayment only.

EZ3 Roof Mount Installation: The test specimens consisted of a 9-1/2" wide by 12" long by 0.040" thick aluminum flashing with a 5/8" diameter hole and an aluminum bushing. The flashing utilized a 1-3/16" diameter by 3/32" thick EDPM washer centered over the hole and adhered to the bottom of the flashing. A 1-9/16" diameter by 3/4" high aluminum bushing was placed through the hole in the flashing from the underside and installed with a bead of sealant between the bottom side of the bushing and the roof deck. A solar panel L-foot bracket was set on top of the flashing over the protruding bushing and secured with a 5/16" x 4-1/2" lag screw, 5/8" diameter by 3/32" thick EDPM roof shoe gasket and 1-1/8" diameter by 3/8" thick spherical washer. The assembly was installed per the manufacturer's installation instructions. Two replicates were installed to the roof deck.

Test Results: The following results have been recorded:

Protocol TAS 100(A)-95 Wind Driven Rain

Test Procedure: The wind speed intervals were conducted as follows:

Interval No.	Wind Speed (mph)	Time (min)	Water Spray
1	35	15	On
2	0	5	Off
3	70	15	On
4	0	5	Off
5	90	15	On
6	0	5	Off
7	110	5	On
8	0	5	Off

Wind Speed	Results	Allowed
35 mph	No leakage	.
70 mph	No leakage	.
90 mph	No leakage	.
110 mph	No leakage	.
	No leakage	14.30 fl-oz

Results: Pass

Official Observers: The following representatives witnessed all or part of the testing.

Name	Company
Eric M. Brennan	Intertek B&C
Tyler J. Holland	Intertek B&C
Joseph A. Reed, P.E.	Intertek B&C
Kyle W. Ruth	Intertek B&C

Detailed drawings, data sheets, representative samples of test specimens, a copy of this report, or other pertinent project documentation will be retained by Intertek B&C for a period of four years from the original test date. At the end of this retention period, such materials shall be discarded without notice and the service life of this report will expire.

Results obtained are tested values and were secured by using the designated test methods. No conclusions of any kind regarding the adequacy or inadequacy of the glass in the test specimen can be made. This report does not constitute certification of this product nor an opinion or endorsement by this laboratory. It is the exclusive property of the client so named herein and relates only to the specimen(s) tested. This report may not be reproduced, except in full, without the written approval of Intertek B&C.

Digitally Signed by: Kyle Ruth

Kyle W. Ruth
Technician – Product Testing

Digitally Signed by: Joseph A. Reed

Joseph A. Reed, P.E.
Senior Director

KWR:wnl

Attachments (pages): This report is complete only when all attachments listed are included.
Appendix A: Photographs (2)
Appendix B: Drawings (4)

Revision Log

Rev. #	Date	Page(s)	Revision(s)
0	8/17/18	N/A	Original report issue
1	8/22/18	Drawings	Added installation instructions

Appendix A

Photographs

Photo No. 1
Test Specimens

Photo No. 2
Underneath of Test Deck Before Testing

Photo No. 3
EZ3 Roof Mount Installation

Photo No. 4
Underneath of Test Deck After Testing

Appendix B

Drawings

REVISIONS			
REV	DESCRIPTION	BY	DATE
A	INITIAL RELEASE	PHQ	01/03/2018

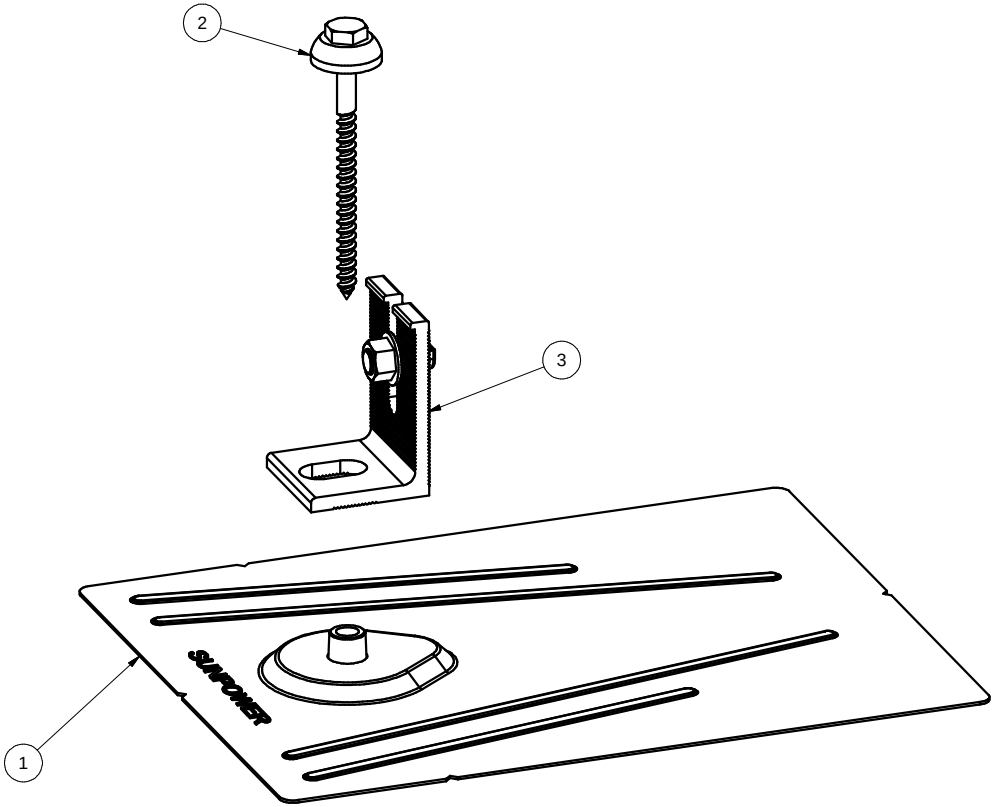

intertek
Total Quality. Assured.

Report #: I6899.02
Date: 08/17/18
Verified by:

ITEM	PART NUMBER	DESCRIPTION	QTY
3	K50223-BK1	L FOOT KIT	1
2	K50222-BK1	LAG SCREW KIT	1
1	K50221-BK1	FLASHING KIT	1

MATERIAL: SEE BOM

Third Angle Projection:

GENERAL SPECIFICATIONS
All Dimensions in inches [millimeters]
Tolerances
X.XXX ±0.01 [0.25mm]
X.XX ±0.02 [0.50mm]
X.X ±0.039 [1.0mm]
Unless otherwise spec'd
Break all sharp edges .010-.020 unless otherwise specified.

DRAWN BY: PHQ
DATE: 01/03/2018
CHECKED BY:
APPROVALS:

SunModo Corp.
14800 NE 65TH STREET, VANCOUVER WA 98682

TITLE: EZ3 FLASHING KIT

B
DRAWING NUMBER: K50220-BK1

SCALE: NONE
SHEET 1 of 1

REVISIONS			
REV	DESCRIPTION	BY	DATE
A	INITIAL RELEASE	PHQ	01/03/2018

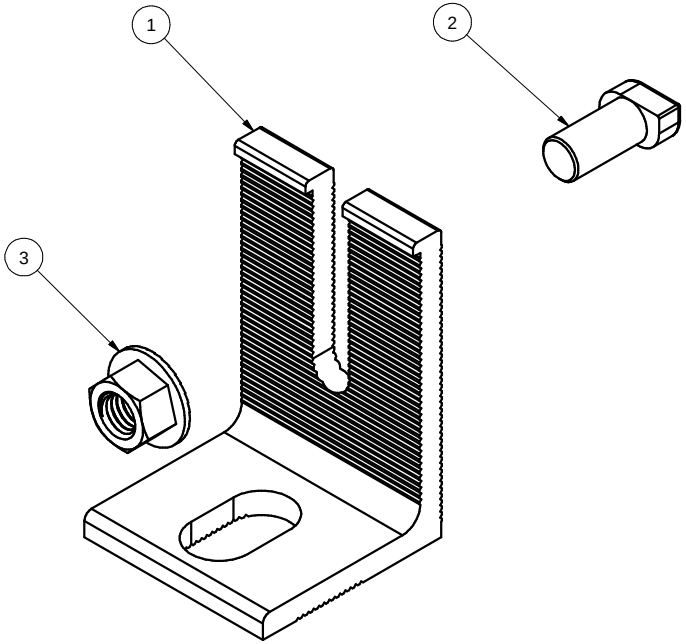

intertek
Total Quality. Assured.

Report #: I6899.02
Date: 08/17/18
Verified by:

ITEM	PART NUMBER	DESCRIPTION	QTY
3	B10029-BK1	FLANGE NUT,SERRATED, M10X1.5,304SS,BLACK	1
2	B50031-BK1	T-BOLT M10X20	1
1	A50023-BK1	L FOOT,EZ3	1

MATERIAL: SEE BOM

Third Angle Projection:

GENERAL SPECIFICATIONS
All Dimensions in inches [millimeters]
Tolerances
X.XXX ±0.01 [0.25mm]
X.XX ±0.02 [0.50mm]
X.X ±0.039 [1.0mm]
Unless otherwise spec'd

Break all sharp edges .010-.020 unless otherwise specified.

DRAWN BY: PHQ
DATE: 01/03/2018
CHECKED BY:
APPROVALS:

SunModo Corp.

14800 NE 65TH STREET, VANCOUVER WA 98682

TITLE: L FOOT KIT

B

DRAWING NUMBER: K50223-BK1

SCALE: NONE

SHEET 1 of 1

REVISIONS			
REV	DESCRIPTION	BY	DATE
A	INITIAL RELEASE	LU	01/03/2018

Report #:	I6899.02
Date:	08/17/18
Verified by:	

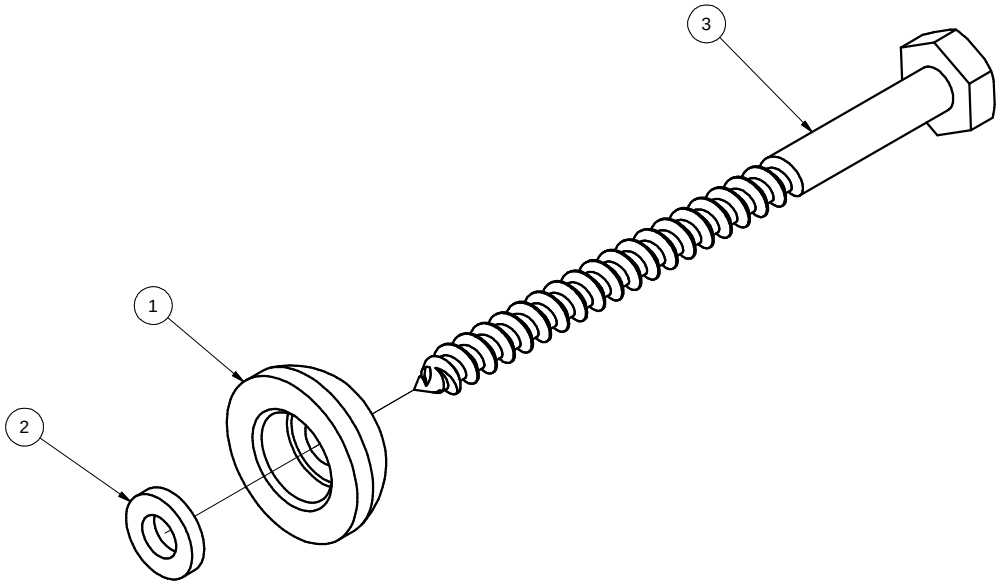

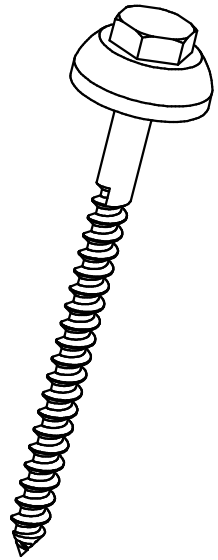

ITEM	PART NUMBER	DESCRIPTION	QTY
3	B50030-BK1	CUSTOM LAG BOLT, 15mm HDxM8x4.5L	1
2	C50003-001	GASKET, EPDM, EZ3 ROOF SHOE	1
1	A50222-BK1	WASHER, SPHERICAL, EZ3	1

MATERIAL: SEE BOM

Third Angle Projection:

GENERAL SPECIFICATIONS
All Dimensions in inches [millimeters]
Tolerances
X.XXX ±0.01 [0.25mm]
X.XX ±0.02 [0.50mm]
X.X ±0.039 [1.0mm]
Unless otherwise spec'd

Break all sharp edges .010-.020 unless otherwise specified.

DRAWN BY: LU
DATE: 01/03/2018
CHECKED BY:
APPROVALS:

SunModo Corp.

14800 NE 65TH STREET, VANCOUVER WA 98682

TITLE: LAG SCREW KIT

B

DRAWING NUMBER: K50222-BK1

SCALE: NONE

SHEET 1 of 1

EZ3 Roof Mount System:
Installation Instructions for attaching the EZ3 Roof Mount Kit to composite shingle roofs. The SunModo EZ3 Roof Mount Kit comes complete with Flashing, Lag Screw with Spherical Washer, L-Foot and 3/8 Hardware.

Locate roof rafters and mark locations on roof. Drill 7/32" pilot holes and backfill with sealant. Slide flashing between 1st and 2nd course of shingles, ensuring flashing does not overhang the downhill shingle.

Secure the L-Foot to the Flashing by lining up the supplied Lag Bolt with Spherical Washer with the pilot hole. Fully seat the Lag Bolt with Spherical Washer.

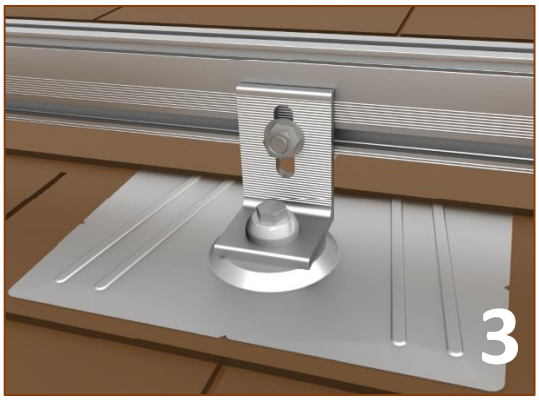

Using the 3/8" hardware supplied attached the Rail to the L-Foot.

intertek Total Quality. Assured.		
	Report #:	I6899.02
	Date:	8/22/18
	Verified by:	

Tools Required:
7/32" long-style bit, drill, torque wrench, sockets set, structural sealant such as Chem-link M1, or Uniflex KST058XXX for wood and composite roofs, caulking gun, tape measure, string line or laser line.