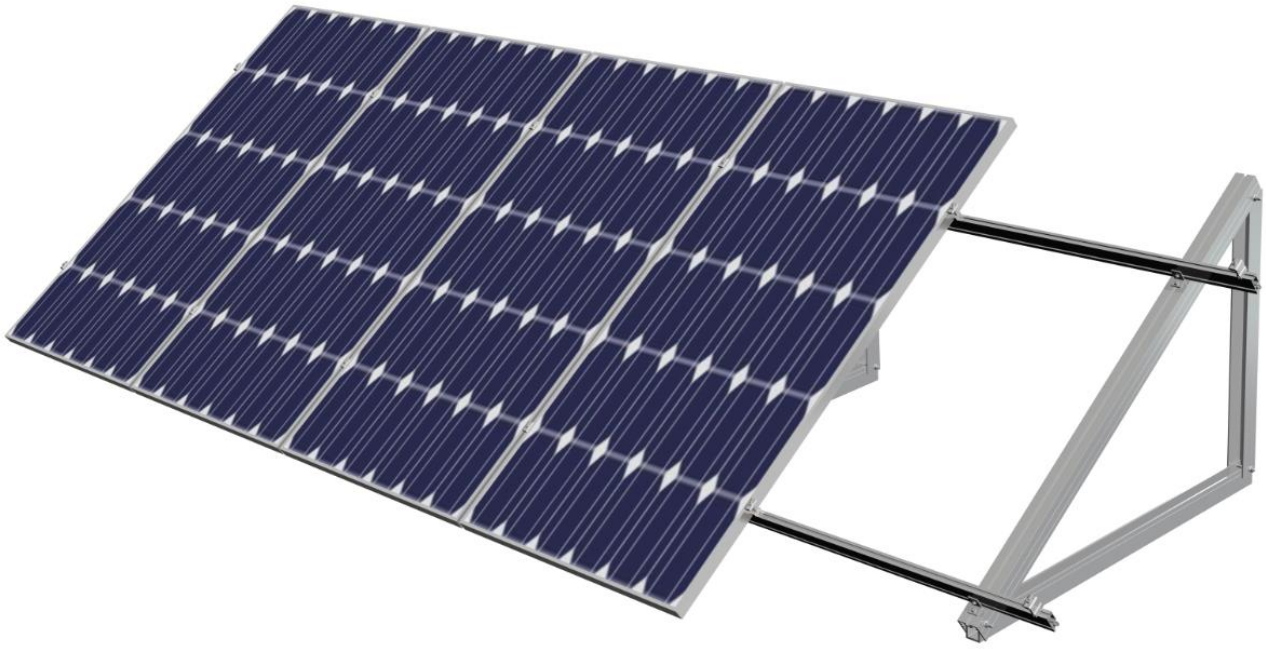

SunModo PV Rack Mounting System

UL2703 Compliant

Please read carefully before installing

Product is tested to and recognized to UL 2703 standards for safety grounding and bonding equipment and meets UL 1703 fire standards.

SunModo PV Rack Mount System can be used to mount photovoltaic (PV) panels in a wide variety of locations. All installations shall be in accordance with NEC requirements in the USA. The self-bonding system is for use with PV modules that have a maximum series fuse rating of 30A. Mechanical design loads per UL 2703: Downward Pressure: 33.42 psf (1600.2 Pa), Upward Pressure: 33.42 psf (1600.2 Pa), Down-Slope: 5 psf (239.4 Pa). Mechanical test loads per LTR AE 2012: Downward Pressure: 50.125 psf (2400 Pa), Upward Pressure: 50.125 psf (2400 Pa).

TABLE OF CONTENTS

Installer Responsibility....3
Safety....3
System Components....4
List of Compliant PV Modules....8
Fault Current Path Diagram....12
Tools Required for Installation....13
Torque Values for Pitched Roof System....14
Portrait Panel Configuration....14
SunShield Awning Mounting System Installation....15
- Vertical Extrusion to Wall....15
- L-Foot to Angle Extrusion....15
- Triangular Truss Assembly....16
- Attach Rail to L-Feet....16
- End Clamp Attachment....17
- Mid Clamp Attachment....17

Ground Wire Attachment....17
Ground Lug Installation....18
Rail End Covers....18
Panel Seam Gasket....18
UL 2703 Label Placement....19

Installer Responsibility

Before ordering and installing materials, all system layout dimensions should be confirmed by field measurements. SunModo reserves the right to alter, without notice, any details, proposals or plans. Any inquiries that you may have concerning installation of the PV system should be directed to your SunModo Sales representative. Consult SunModo Sales for any information not contained in this manual. This manual is intended to be used as a guide when installing SunModo's SunShield Awning system. It is the responsibility of the installer to ensure the safe installation of this product as outline herein.

- Installer shall employ only SunModo products detail herein. The use of non SunModo components can void the warranty and cancel the letters of UL compliance.
- Installer shall guarantee that screws and anchors have adequate pullout strength and shear capacities.
- Installer shall adhere to the torque values specified in this Instruction Manual.
- Installer shall use anti-seize compound, such as Permatex anti-seize, lubricant is recommended for all threaded parts.
- Installer is responsible to determine that the roof, its rafters, connections, and other architectural support components can sustain the array under all code level loading conditions.
- Installer shall adhere to all relevant local or national building codes. This takes account of those that supplant this document's requirements.
- Installer shall guarantee the safe placement of all electrical details of the PV array.
- Installer shall comply with all applicable local, state and national building codes, including periodic re-inspection of the installation for loose components, loose fasteners and any corrosion, such that if found, the affected components are to be immediately replaced.
- Installer to ensure the structural support members or footings for mounting the array can withstand all code loading conditions. Consult with licensed professional engineer for the appropriate loading conditions.
- Installer to follow all regional safety requirements during installation.
- This racking system may be used to ground and/or mount a PV module complying with UL 1703 only when the specific module has been evaluated for grounding and/or mounting in compliance with the included instructions.

Safety

Review relevant OSHA and other safety standards before following these instructions. The installation of solar PV systems is a dangerous procedure and should be supervised by trained and experienced personnel.

It is not possible for SunModo to be aware of all the possible job site situations that could cause an unsafe condition to exist. The installer of the roof system is responsible for reading these instructions and determining the safest way to install the roof system. These instructions are provided only as a guide to show a knowledgeable, trained erector the correct part placement one to another. If following any of the installation steps would endanger a worker, the erector should stop work and decide upon a corrective action. Provide required safety railing, netting, or safety lines for crew members working on the roof.

System Components

	Standard Triangular Awning Kit available in clear and black.	K10362-XXX
	Triangular Plus Awning Kit available in clear and black.	K10267-XXX
	Solar Panel Seam Gaskets available for 1/2" and 1” gaps between panels	C10042-XXX 1/2" Seam Gasket C10041002 Intersection Cap C10040-XXX 1” Seam Gasket
	Aluminum L-Foot available in clear and black. 3/8” Flange Nut and Bolt included	K10066-001 K10066-BK1 Standard L-Foot Kit K10096-001 Tall L-Foot Kit
	Adjustable End Clamp Kit, fits panel height from 33 to 50 mm. Adjustable End Clamp Kit, fits panel height from 30 to 46 mm.	K10299-001 K10299-BK1 K10299-002 K10299-BK2

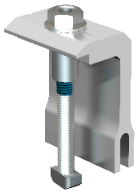	End Clamp Kit, fits panel height from 31 to 50 mm. For last 3 digits, see table on last page.	K10224-1XX K10224-1XX-BK
	Grounding Mid Clamp Kit for standard rail; fits panel height from 31 to 50 mm. For last 3 digits, see table on last page. ***May be repositioned until torqued to final value.***	K10180-001 K10180-BK1 **For single-use only**
	Grounding End Clamp Kit with shared rail adaptor for standard rail; fits panel height from 31 to 50 mm. For last 3 digits, see table on last page. ***May be repositioned until torqued to final value.***	K10183-1XX K10183-1XX-BK **For single-use only**
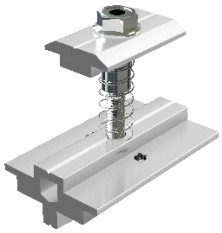	Grounding Mid Clamp Kit with shared rail adaptor for standard rail; fits panel height from 31 to 50 mm. ***May be repositioned until torqued to final value.***	K10182-001 K10182-001-BK **For single-use only**
	Grounding Lug Kit with Grounding Spacer and 1/4-20 T-Bolt. ***May be repositioned until torqued to final value.***	K10179-001 **For single-use only**
	Helio Rails: Features both 1/4” and 3/8” side slots, and 1/4” top slot for clamping PV panels. Available in variety of standard lengths. Last 3 digits denote rail length. 4 stock sizes in clear and black.	A20144-XXX A20144-XXX-BK HR250 (Standard Rail) A20145-XXX A20145-XXX-BK HR350 (Heavy Rail) A20146-XXX A20146-XXX-BK HR500 (Super Rail)

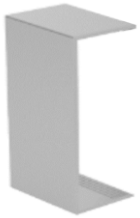	Metal Rail End Caps available for Helio Standard and Heavy rails (optional)	A20284-001 A20284-BK1 HR250 (Helio Standard) A20285-001 HR350 (Helio Heavy) A20263-001 HR500 (Helio Super)
	3/8” Slot Rail Splice Kit with 2X 3/8-16 hex bolts and flange nuts with integral grounding. ***May be repositioned until torqued to final value.***	K10178-001 K10178-BK1 HR250/HR350 3/8” Splice **For single-use only**
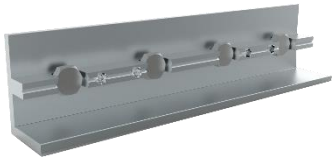	1/4” Slot Rail Splice Kit with 4X bolts and flange nuts with integral grounding**. *May be repositioned until torqued to final value.***	K10177-001 K10177-BK1 HR250/HR350 1/4” Splice **For single-use only** K10250-001 K10250-001-BK HR500 1/4” Splice **Requires bond jumper**
	HR150 (Open Rail): Features wire management channel and both 1/4” and 3/8” side slots, and 1/4” top slot for clamping PV panels. Available in variety of standard lengths. Last 3 digits denote rail length. 4 stock sizes in clear anodized and black.	A20242-XXX A20242-XXX-BK HR150 (Open Rail)
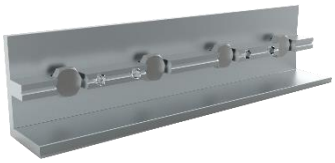	1/4” Slot Open Rail Splice Kit with 4X 1/4-20 Bolts and Flange Nuts with integral grounding**. *May be repositioned until torqued to final value.***	K10236-001 HR150 Splice Kit **For single-use only**
	Rail End Cap available for HR150 rails (optional)	A20250-001 A20250-BK1 HR150 Rail End Cover

The HR150 family of products are shown assembled above. Two HR150 Rails are spliced together with an HR150 Rail Splice. PV electrical wires are shown routed in the channels of the HR150 Rails, retained with two HR150 Channel Clips snapped into place.

List of Compliant PV Modules

UL 2703 Qualified Modules for use with SunModo PV Racking Systems

Evaluated PV Modules	
Module manufacturer	**Model numbers**
Boviet Solar	BVM6610M-250, BVM6610M-255, BVM6610M-260, BVM6610M-265, BVM6610M-270, BVM6610M-275, BVM6610M-280, BVM6610-305, BVM6610-310, BVM6610-315, BVM6610-320, BVM6612M-325, BVM6612M-330, BVM6612M-335, BVM6612M-340, BVM6612M-345, BVM6612M-350, BVM6610P-250, BVM6610P-255, BVM6610P-260, BVM6610P-265, BVM6610P-270, BVM6610P-275, BVM6612P-310, BVM6612P-315, BVM6612P-320, BVM6612P-325, BVM6612P-330, BVM6612P-335, BVM6612P-340, BVM6612P-345, BVM6612P-350, BVM6612P-355
C-Sun	CSUN290-72P, CSUN295-72P, CSUN300-72P, CSUN305-72P, CSUN310-72P, CSUN285-72M, CSUN290-72M, CSUN295-72M, CSUN300-72M, CSUN305-72M, CSUN310-72M, CSUN315-72M, CSUN320-72M, CSUN235-60M, CSUN240-60M, CSUN245-60M, CSUN240-60P, CSUN245-60P, CSUN250-60P, CSUN255-60P, CSUN260-60P
Canadian Solar	CS6X-300P, CS6X-305P, CS6X-310P, CS6X-315P, CS6X-320P, CS6P-255P, CS6P-260P, CS6P-265P, CS6P-260M, CS6P-265M, CS6V-210P, CS6V-215P, CS6V-220M, CS6V-225M, CS6K-265M, CS6K-270M, CS6K-290MS, CS6K-295MS, CS6K-300MS, CS6K-305MS
ET Solar	ET-P672300WW, ET-P672305WW, ET-P672310WW, ET-P672315WW
Hansol	HS300SE-V01, HS305SE-V01, HS310SE-V01, HS315SE-V01, HS320SE-V01, HS325SE-V01, HS330SE-V01, HS335SE-V01, HS340SE-V01
Hanwha Q Cells	Q.PEAK DUO-L-G4.2 365W, Q.PEAK DUO-L-G4.2 370W, Q.PEAK DUO L-G5.2 380W, Q.PEAK DUO L-G5.2 385W, Q.PEAK DUO L-G5.2 390W, Q.PEAK DUO L-G5.2 395W, Q.PEAK DUO-G5-BLK 305W, Q.PEAK DUO-G5-BLK 310W, Q.PEAK DUO-G5-BLK 315W, Q.PEAK DUO-G5-BLK 320W, Q.PEAK DUO-G5 315W, Q.PEAK DUO-G5 320W, Q.PEAK DUO-G5 325W, Q.PEAK DUO-G5 330W, Q.PEAK DUO-G5 305W, Q.PEAK DUO-G5 310W, Q.PEAK DUO-G5 315W, Q.PEAK DUO-G5 320W, Q.PRO L-G2 305, Q.PRO L-G2 310, Q.PRO L-G2 315
Hareon	HR-280P-24/Ba, HR-285P-24/Ba, HR-290P-24/Ba, HR-295P-24/Ba, HR-300P-24/Ba, HR-305P-24/Ba, HR-310P-24/Ba
Heliene	72P-285, 72P-290, 72P-295, 72P-300, 72P-310, 72P-320, 72P-325, 72P-330, 72P-335, 72P-340, 72M-345, 72M-350, 72M-360, 72M-365, 72M-370, 72M-BLK-345, 72M-BLK-350, 72M-BLK-360, 72M-BLK-365, 72M-BLK-370
Hyundai	HiS-M300TI, HiS-M305TI, HiS-M310TI, HiS-M315TI, HiS-M320TI, HiS-M325TI HiS-S325TI, HiS-S330TI, HiS-S335TI, HiS-S340TI, HiS-S345TI, HiS-S350TI
Itek Energy	IT250HE, IT255HE, IT260HE, IT265HE, IT270HE, IT275HE, IT280HE, IT285HE, IT290HE, IT295HE, IT300HE, IT305HE, IT310HE, IT315HE, IT295SE, IT300SE, IT305SE, IT310SE, IT315SE, IT350SE, IT355SE, IT360SE, IT365SE, IT370SE

JA Solar	JAM60D00-300/BP, JAM60D00-305/BP, JAM60D00-310/BP, JAM60D00-315/BP, JAM60D00-320/BP, JAM72D00-355/BP, JAM72D00-360/BP, JAM72D00-365/BP, JAM72D00-370/BP, JAM72D00-375/BP, JAM72S09-375/PR, JAM72S09-380/PR, JAM72S09-385/PR, JAM72S09-390/PR, JAM72S09-395/PR, JAM72S10-390/PR, JAM72S10-395/PR, JAM72S10-400/PR, JAM72S10-405/PR, JAM72S10-410/PR, JAM72S01-365/PR, JAM72S01-370/PR, JAM72S01-375/PR, JAM72S01-380/PR, JAM72S01-385/PR, JAP6 72-280/3BB, JAP6 72-285/3BB, JAP6 72-290/3BB, JAP6 72-295/3BB, JAP6 72-300/3BB, JAP6 72-305/3BB, JAP6 72-310/3BB, JAP6 72-315/3BB, JAP6 72-320/3BB
Jinko	JKM315M-60HL, JKM320M-60HL, JKM325M-60HL, JKM330M-60HL, JKM335M-60HL, JKM340M-60HL, JKM345M-60HL, JKM305M-60L, JKM310M-60L, JKM315M-60L, JKM325M-60L, JKM370-72L-V, JKM375-72L-V, JKM380-72L-V, JKM385-72L-V, JKM390-72L-V, JKM380-72HL-V, JKM385-72HL-V, JKM390-72HL-V, JKM395-72HL-V, JKM400-72HL-V
Kyocera	KD315GX-LFB, KU260-6MCA, KU265-6MCA, KD255GX-LFB2, KD260GX-LFB2
LG	LG275S1C-G4, LG280S1C-G4, LG285S1C-G4, LG300N1C-G4, LG300N1K-G4, LG300N1T-G4, LG305N1C-G4, LG305N1K-G4, LG310N1C-G4, LG310N1K-G4, LG310N1T-G4, LG315N1C-G4, LG320N1C-G4, LG335S2W-G4, LG340S2W-G4, LG360N2W-B3, LG365N2W-B3, LG365N2W-G4, LG370N2W-G4, LG375N2W-G4, LG380N2W-G4, LG385N2W-G4, LG390N2W-A5, LG395N2W-A5, LG400N2W-A5, LG405N2W-A5, LG410N2W-A5, LG415N2W-A5, LG420N2W-A5, LG425N2W-A5
LONGi	LR6-60PE-BOW-310W, LR6-60HPH-BOB-310W, LR672HPH-SOW-380W
Mission Solar	MSE290SQ5T, MSE295SQ5T, MSE300SQ5T, MSE300SQ8T, MSE305SQ8T, MSE310SQ8T, MSE340SO9J, MSE345SO9J, MSE350SO9J, MSE365SQ9S, MSE370SQ9S, MSE375SQ9S
Mitsubishi	PV-MLE270HD, PV-MLE275HD, PV-MLE280HD
Panasonic	VBHN325SA16, VBHN330SA16
Phono Solar Tech	PS255M-20/U, PS260M-20/U, PS265M-20/U, PS270M-20/U, PS275M-20/U, PS280M-20/U, PS300P-24T, PS305P-24T, PS310P-24T, PS315P-24T, PS320P-24T, PS325P-24T
REC Solar	REC310NP, REC315NP, REC320NP, REC325NP, REC330NP, REC275TP2, REC280TP2, REC285TP2, REC290TP2, REC295TP2, REC300TP2, REC275TP2 BLK2, REC280TP2 BLK2, REC285TP2 BLK2, REC330TP2S 72, REC335TP2S 72, REC340TP2S 72, REC345TP2S 72, REC350TP2S 72, REC355TP2S 72
Renesola	JC 255 M-24/Bbs, JC 260 M-24/Bbs, JC 265 M-24/Bbs, JC 270 M-24/Bbs, JC 250 M-24/Bb, JC 255 M-24/Bb, JC 260 M-24/Bb, JC 305 M-24/Abs, JC 310 M-24/Abs, JC 315 M-24/Abs, JC 320 M-24/Abs, JC 325 M-24/Abs, JC 330 M-24/Abs, JC 335 M-24/Abs, JC 330 S-24/Abs, JC 335 S-24/Abs, JC 340 S-24/Abs, JC 345 S-24/Abs, JC 270 S-24/Bbs, JC 280 S-24/Bbs, JC 285 S-24/Bbs
Sanyo	HIP-190BA3, HIP-195BA3, HIP-200BA3, HIP-205BA3, HIT-N215A01, HIT-N220A01, HIT-N225A01

Seraphim	SRP-335-6MA, SRP-340-6MA, SRP-345-6MA, SRP-350-6MA, SRP-360-6MA, SRP-365-6MA, SRP-370-6MA, SRP-375-6MA, SRP-330-6MA-DG, SRP-335-6MA-DG, SRP-340-6MA-DG, SRP-345-6MA-DG, SRP-355-6MA-DG, SRP-360-6MA-DG, SRP-365-6MA-DG, SRP-370-6MA-DG, SRP-280-6MB, SRP-285-6MB, SRP-290-6MB, SRP-295-6MB, SRP-300-6MB, SRP-305-6MB, SRP-310-6MB, SRP-315-6MB, SRP-275-6MB-DG, SRP-280-6MB-DG, SRP-285-6MB-DG, SRP-290-6MB-DG, SRP-295-6MB-DG, SRP-300-6MB-DG, SRP-305-6MB-DG, SRP-310-6MB-DG, SRP-315-6MB-DG, SRP-280-6MB-HV, SRP-285- SRP-280-6MB, SRP-285-6MB, SRP-290-6MB, SRP-295-6MB 6MB-HV, SRP-290-6MB-HV, SRP-295-6MB-HV, SRP-300-6MB-HV, SRP-305-6MB-HV, SRP-310-6MB-HV, SRP-315-6MB-HV, SRP-325-6PA, SRP-330-6PA, SRP-335-6PA, SRP-340-6PA, SRP-320-6PA-DG, SRP-330-6PA-DG, SRP-335-6PA-DG, SRP-340-6PA-DG, SRP-325-6PA-HV, SRP-330-6PA-HV, SRP-335-6PA-HV, SRP-340-6PA-HV, SRP-270-6PB, SRP-275-6PB, SRP-280-6PB, SRP-285-6PB, SRP-265-6PB-DG, SRP-270-6PB-DG, SRP-275-6PB-DG, SRP-280-6PB-DG, SRP-270-6PB-HV, SRP-275-6PB-HV, SRP-280-6PB-HV, SRP-285-6PB-HV
Silfab	SLA280M, SLA285M, SLA290M, SLA295M, SLA300M, SLA310M, SLA315M, SLA320M, SLG335M, SLG340M, SLG345M, SLG350M, SLG355M, SLG360M, SLG370M, SLG380M, SLA320MCH, SLA320MWT
Solaria	PowerXT-350R-AC, PowerXT-355R-AC, PowerXT-360R-AC, PowerXT-320R-BX, PowerXT-325R-BX, PowerXT-325R-PX, PowerXT-330R-PX, PowerXT-340R-BD, PowerXT-345R-BD, PowerXT-345R-PD, PowerXT-350R-PD, PowerXT-355R-PD, PowerXT-360R-PD, PowerXT-410C-PD, PowerXT-420C-PD, PowerXT-430C-PD
SolarWorld (V2.5 frame)	Sunmodule SW series: SW 220 mono and poly, SW 225 poly, SW 230 poly, SW 235 poly, SW 240 mono and poly, SW 245 mono and poly, SW 250 mono, SW 255 mono, SW 260 mono, SW 265 mono, SW 270 mono Sunmodule Plus series: 285W mono, 280W mono, 275W mono, 270W mono, 265W mono, 260W mono, 255W mono, 250W mono, Sunmodule Protect 275W mono, Sunmodule Protect 270W mono, Sunmodule Protect 265W mono, Sunmodule SW 245 - 255 poly / Pro-Series
SolarWorld (33mm frame)	Sunmodule Pro-Series: 250W poly, 255W poly, 260W poly, 315W XL mono, 320W XL mono, 325W XL mono, 330W XL mono, 335W XL mono, 340W XL mono, 345W XL mono, 350W XL mono Sunmodule Plus: 260W mono, 270W mono, 275W mono, 280W mono, 285W mono
Stion	STO-135A, STO-140A, STO-145A, STO-150A
SunEdison	F310EzD, F315EzD, F320EzD, F325EzD, F330EzD, F335EzD, F310EzC, F315EzC, F320EzC, F325EzC, F330EzC, F335EzC, R330EzC, R335EzC, R340EzC, R345EzC, R350EzC, R355EzC
SunPower	SPR-318E-WHT-D, SPR-A400, SPR-A415, SPR-A425, SPR-E19-235, SPR-E19-310-COM, SPR-E19-320, SPR-E20-245, SPR-E20-327, SPR-E20-320-COM, SPR-E20-327-COM, SPR-E20-435-COM, SPR-E20-327-D-AC, SPR-P17-330-COM, SPR-P17-335-COM. SPR-P17-340-COM, SPR-P17-345-COM, SPR-P17-350-COM, SPR-P17-355-COM, SPR-P17-360-COM, SPR-X20-250-BLK, SPR-X20-250-BLK-B-AC, SPR-

	X20-327-C-AC, SPR-X21-335-BLK, SPR-X21-335-BLK-D-AC, SPR-X21-335-D-AC, SPR-X21-345, SPR-X21-345-COM, SPR-X21-345-D-AC, SPR-X21-350-BLK, SPR-X21-350-BLK-D-AC, SPR-X21-355-BLK, SPR-X21-445-COM, SPR-X21-460-COM, SPR-X21-460-COM, SPR-X21-470-COM, SPR-X22-360, SPR-X22-370, SPR-X22-360-COM, SPR-X22-360-D-AC, SPR-X22-370-D-AC
Trina	TSM-225 PC/PA05, TSM-230 PC/PA05, TSM-235 PC/PA05, TSM-240 PC/PA05, TSM-245 PC/PA05
Yingli	YL230P-29b, YL235P-29b, YL240P-29b, YL245P-29b

Fault Current Path Diagram

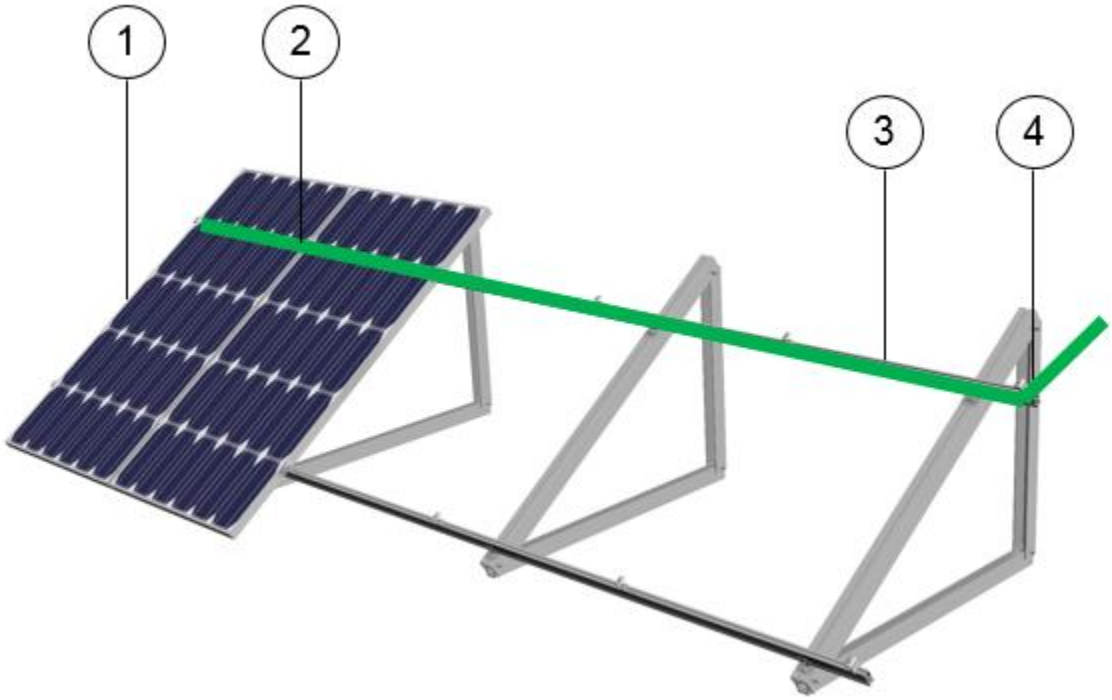

Items are listed in the fault current path in order from the PV Panel to the Grounding Lug:

1. PV Panel
2. Grounding Mid Clamp Kit
3. Helio Rail HR150, HR250, HR350 and/or HR500
4. Grounding Lug

Fault Current Path

Tools Required for Installation

Electric Drill or Impact Driver.
Note that the use of an impact driver is strongly discouraged for all stainless nut and bolt hardware.

3/8” Socket wrench

Sockets for 3/8” drive sockets, 7/16”, 1/2”, 9/16” and 1-1/16”

Torque Wrench 3/8” drive, 0 to 35 ft. lbs.

Anti-seize compound (Permatex 80071 or equivalent).

Tape measure

Saws for cutting aluminum posts and rails as necessary

Chalk line or laser

Torque Values for Pitched Roof System

These values must be adhered to, both for mechanical strength and to insure the performance of the integral grounding and bonding features. It is required that a torque wrench be used to measure the bolt torque during final assembly, and it is recommended that anti-seize compound be applied to the screw threads.

Hardware	Torque lbs.
1/4-20 Ground Lug, Setscrew with 1/8 Allen drive.	4.2 ft. lbs. (50 in. lbs.)
1/4-20 Mid or End Clamp, Female Standoff with 7/16" Hex Head Collar Nut	7.5 ft. lbs.
1/4-20 Nuts and Bolts	7.5 ft. lbs.
3/8-16 Nuts and Bolts	15 ft. lbs.
3/8-16 T-Bolts and Hex Flange Nuts	15 ft. lbs.

Portrait Panel Configuration

SunModo is proud to offer the SunShield Awning System for mounting PV panels to the south facing walls of your home or office building. Before attempting to install the SunShield Awning System to the wall we recommend you consult with a structural engineer for attachment method and attachment frequency.

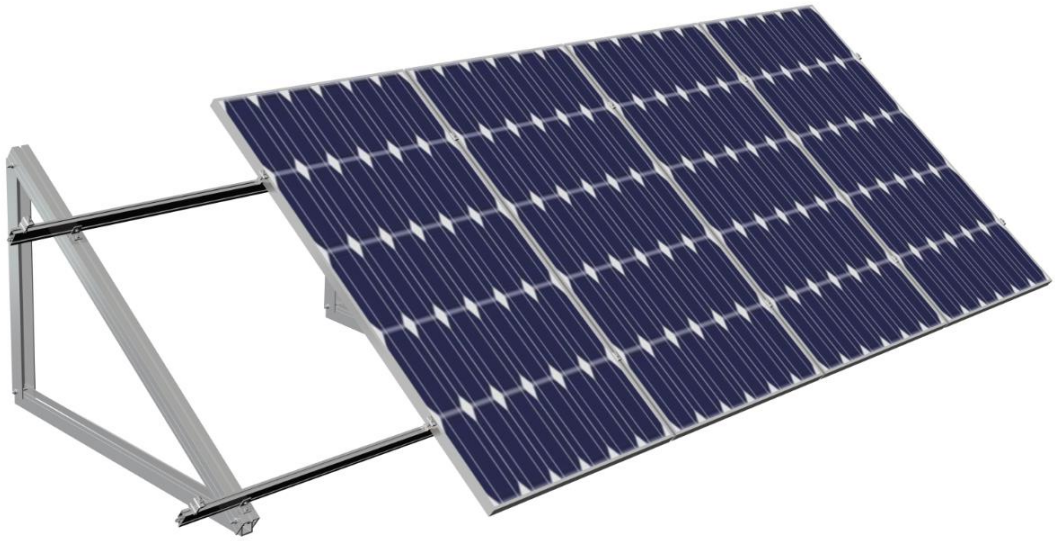

SunShield Awning Mounting System Installation

Vertical Extrusion to Wall

Attach the Vertical extrusion of the Triangular Truss to the wall using the attachment method, height and frequency specified by a structural engineer.	

L-Foot to Angle Extrusion

Attach the two L-Feet to the Angle extrusion of the Triangular Truss and secure using 3/8-16 T-Bolts and Nuts provided (torque to 15 ft lbs.).	

Triangular Truss Assembly

Assemble the Angle Extrusion and Base Extrusion to the Vertical Extrusion using 3/8-16 hardware provided as shown (torque to 15 ft lbs).

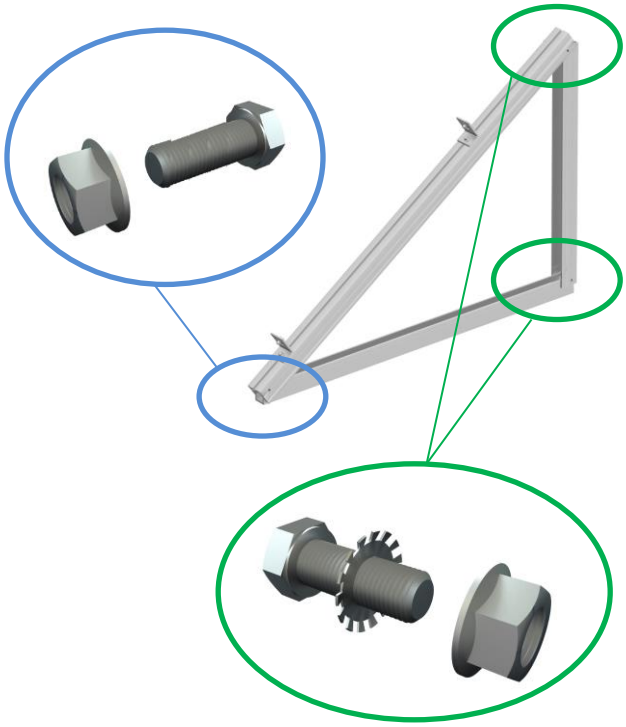

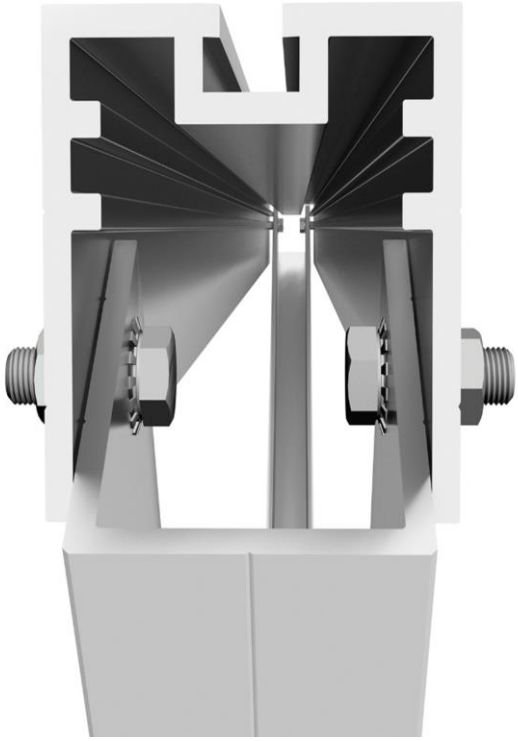

Attach Rail to L-Feet

Attach the Rails to the L-feet using 3/8-16 T-Bolts and Nuts provided (torque to 15 in lbs.).

Install Rail Splices as needed.

End Clamp Attachment

There must be a minimum of 1.5 inches of Rail extending beyond the PV panel frame.

Clamp the PV panel frame by inserting the T-Bolt into the Rail slot. Position the End Clamp firmly against the PV panel frame and secure using the 1/4-20 Collar Bolt. Using a 7/16" socket, torque to 7.5 ft. lbs.

Note: When two or more PV panels are installed grounding via the End Clamp is optional. For a single panel configuration (shown), insert the T-Bolt into a T-Bolt Holder for grounding the panel to the Rails.

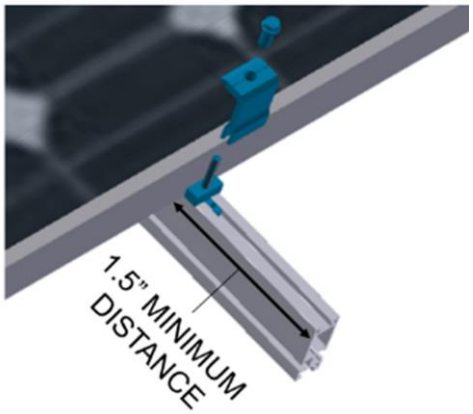

Mid Clamp Attachment

Insert the T-Bolt in the Rail slot and turn clockwise 90° to engage the head into the slot. Insert Grounding T-Bolt Holder to lock T-Bolt in place.

Thread the 1/4-20 Collar Bolt onto the top of the T-Bolt as shown. After positioning the Mid Clamp firmly against the PV panel frame, using a 7/16" socket, tighten to 7.5 ft. lbs.

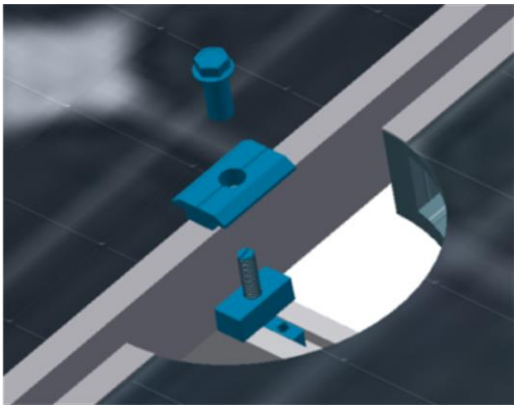

Ground Wire Attachment

The picture shows a grounding lug mounted on one Rail per row of panels, and a #6 solid copper grounding wire connecting the Ground Lugs to the building ground per NEC 690.47.

Ground Lug Installation

One Rail per row of panels should have a Ground Lug for fastening the ground conductor to the array. The Ground Lug is mounted on the top or side of the Rail using a special 1/4" T-Bolt, Grounding Spacer, and Flange Nut. Grounding Lugs K10179-001, and detailed installation document D10003 are available from SunModo separately.	

Rail End Covers

Rail End Covers can be attached to the mounting rails as shown.	

Panel Seam Gasket

Install the Panel Seam Gaskets in the gaps between the solar panels.	

UL 2703 Label Placement

When requested the UL 2703 Label can be located on the Rail or Rail Splice. SUNMODO Vancouver, WA, USA DATE CODE 01 02 03 04 05 06 07 08 09 10 11 12 2017 2018 2019 Conforms To UL STD 2703 Certified To LTR AE- 001 PV RACK MOUNTING SYSTEMS System Fire Class Rating: See Installation Instructions for Installation Requirements to Achieve a Specified System Fire Class Rating with this Product. Load Rating: See Installation Instructions. ETL CLASSIFIED Intertek 5001753	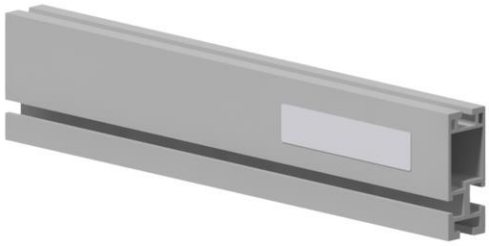

See www.sunmodo.com for current warranty documents and information.

SunModo Corporation
Ph: 360-844-0048