SunModo PV Rack Mount System

UL2703 Compliant

Please read carefully before installing

Product is tested to and recognized to UL 2703 standards for safety grounding and bonding equipment and meets UL1703 fire standards.

SunModo PV Rack Mount System can be used to mount photovoltaic (PV) panels in a wide variety of locations. All installations shall be in accordance with NEC requirements in the USA. The self-bonding system is for use with PV modules that have a maximum series fuse rating of 30A. Mechanical design loads per UL 2703: Downward Pressure: 33.42 psf (1600.2 Pa), Upward Pressure: 33.42 psf (1600.2 Pa), Down-Slope: 5 psf (239.4 Pa). Mechanical test loads per LTR AE 2012: Downward Pressure: 50.125 psf (2400 Pa), Upward Pressure: 50.125 psf (2400 Pa).

TABLE OF CONTENTS

SunModo Corporation:
Vancouver, Washington
www.SunModo.com
Ph: 360-844-0048
info@sunmodo.com

Intertek
5001753

Installer Responsibility:

Before ordering and installing materials, all system layout dimensions should be confirmed by field measurements. SunModo reserves the right to alter, without notice, any details, proposals or plans. Any inquiries that you may have concerning installation of the PV system should be directed to your SunModo Sales representative. Consult SunModo Sales for any information not contained in this manual. This manual is intended to be used as a guide when installing SunModo's EZ Tile Hook Mount System on pitched roofs. It is the responsibility of the installer to ensure the safe installation of this product as outline herein.

- Installer shall employ only SunModo products detail herein. The use of non SunModo components can void the warranty and cancel the letters of UL compliance.
- Installer shall guarantee that screws and anchors have adequate pullout strength and shear capacities.
- Installer shall adhere to the torque values specified in this Instruction Manual.
- Installer shall use anti-seize compound, such as Permatex anti-seize, lubricant is recommended for all threaded parts.
- Installer is responsible to install solar panels over a Fire Resistant roof covering rated for the application.
- Installer is responsible to determine that the roof, its rafters, connections, and other architectural support components can sustain the array under all code level loading conditions.
- Installer shall adhere to all relevant local or national building codes. This takes account of those that supplant this document's requirements.
- Installer shall guarantee the safe placement of all electrical details of the PV array.
- Installer shall comply with all applicable local, state and national building codes, including periodic re-inspection of the installation for loose components, loose fasteners and any corrosion, such that if found, the affected components are to be immediately replaced.
- Installer to ensure the structural support members or footings for mounting the array can withstand all code loading conditions. Consult with licensed professional engineer for the appropriate loading conditions.
- Installer to follow all regional safety requirements during installation.
- This racking system may be used to ground and/or mount a PV module complying with UL 1703 only when the specific module has been evaluated for grounding and/or mounting in compliance with the included instructions.
- Installer shall ensure bare copper grounding wire does not contact aluminum and zinc-plated steel components to prevent risk of galvanic corrosion.
- If loose components or loose fasteners are found during periodic inspection, re-tighten immediately. If corrosion is found, replace affected components immediately.

Safety:

Review relevant OSHA and other safety standards before following these instructions. The installation of solar PV systems is a dangerous procedure and should be supervised by trained and experienced personnel.

It is not possible for SunModo to be aware of all the possible job site situations that could cause an unsafe condition to exist. The installer of the roof system is responsible for reading these instructions and determining the safest way to install the roof system. These instructions are provided only as a guide to show a knowledgeable, trained erector the correct part placement one to another. If following any of the installation steps would endanger a worker, the erector should stop work and decide upon a corrective action. Provide required safety railing, netting, or safety lines for crew members working on the roof.

Lag Pull-Out Capacities:

Sources: American Wood Council, NDS 2005, Table 11.2 A, 11.3.2 A

Lag pull-out (withdrawal) capacities (lbs.) in typical lumber:	Specific Gravity	5/16" Shaft per 1" thread depth	5/16" Shaft per 2-1/2" thread depth
Douglas Fir, Larch	.50	266	665
Douglas Fir, South	.46	235	588
Engelmann Spruce, Lodgepole Pine (MSR 1650 f & higher)	.46	235	588
Hem, Fir	.43	212	530
Hem, Fir (North)	.46	235	588
Southern Pine	.55	307	768
Spruce, Pine, Fir	.42	205	513
Spruce, Pine, Fir (E of 2 million psi and higher grades of MSR and MEL)	.50	266	665

SunModo Self-bonding system

SunModo developed a proprietary grounding and bonding system that is built into the mounting hardware for the rails, clamps and splices. We provide further bonding through all the SunTurf racking components including the Pipe Caps, Beams, Posts and Post Base Plates. All hardware meet UL 2703 Grounding and Fire Standards tested by ETL.

The basis of the system is our patented stainless steel floating grounding pin which is designed to be captive in the mounting components and provides a bonding path from the PV panel frames to the rails and rail splices, and finally to the ground lug. The self-bonding system is for use with PV modules that have a maximum series fuse rating of 30A. The maximum number of PV modules is limited by the system voltage, so if a system has multiple inverters, the SunModo racking system can theoretically go on forever.

Finally, we have added a spring and a threadlocker to our Mid Clamp assemblies. The spring keeps the Mid Clamp in the open position ready to receive the solar module. The threadlocker is a light bonding agent allowing the T-Bolt engagement into the Rail when the Collar Nut is turned from above. The threadlocker has the added benefit of being an anti-seize agent for stainless steel hardware in the area where it is applied. For additional anti-seize protection refer to the 'Tools Required for Installation' section of this document.

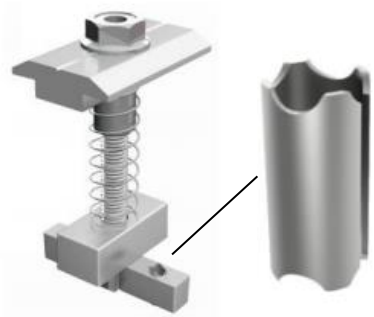

Mid Clamp with Ground Pins

Similarly, the rail splices the grounding pins, eliminating the need for extra bonding components.

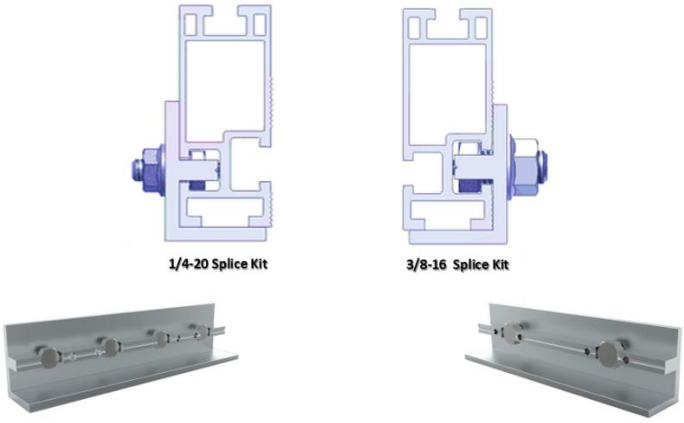

Rail Splices with Grounding Pins

List of Compliant PV Modules

UL 2703 Qualified Modules for use with SunModo PV Racking Systems

Evaluated PV Modules	
Module manufacturer	**Model numbers**
Boviet Solar	BVM6610M-250, BVM6610M-255, BVM6610M-260, BVM6610M-265, BVM6610M-270, BVM6610M-275, BVM6610M-280, BVM6610-305, BVM6610-310, BVM6610-315, BVM6610-320, BVM6612M-325, BVM6612M-330, BVM6612M-335, BVM6612M-340, BVM6612M-345, BVM6612M-350, BVM6610P-250, BVM6610P-255, BVM6610P-260, BVM6610P-265, BVM6610P-270, BVM6610P-275, BVM6612P-310, BVM6612P-315, BVM6612P-320, BVM6612P-325, BVM6612P-330, BVM6612P-335, BVM6612P-340, BVM6612P-345, BVM6612P-350, BVM6612P-355
C-Sun	CSUN290-72P, CSUN295-72P, CSUN300-72P, CSUN305-72P, CSUN310-72P, CSUN285-72M, CSUN290-72M, CSUN295-72M, CSUN300-72M, CSUN305-72M, CSUN310-72M, CSUN315-72M, CSUN320-72M, CSUN235-60M, CSUN240-60M, CSUN245-60M, CSUN240-60P, CSUN245-60P, CSUN250-60P, CSUN255-60P, CSUN260-60P
Canadian Solar	CS6X-300P, CS6X-305P, CS6X-310P, CS6X-315P, CS6X-320P, CS6P-255P, CS6P-260P, CS6P-265P, CS6P-260M, CS6P-265M, CS6V-210P, CS6V-215P, CS6V-220M, CS6V-225M, CS6K-265M, CS6K-270M, CS6K-290MS, CS6K-295MS, CS6K-300MS, CS6K-305MS
ET Solar	ET-P672300WW, ET-P672305WW, ET-P672310WW, ET-P672315WW
Hansol	HS300SE-V01, HS305SE-V01, HS310SE-V01, HS315SE-V01, HS320SE-V01, HS325SE-V01, HS330SE-V01, HS335SE-V01, HS340SE-V01
Hanwha Q Cells	Q.PEAK DUO-L-G4.2 365W, Q.PEAK DUO-L-G4.2 370W, Q.PEAK DUO L-G5.2 380W, Q.PEAK DUO L-G5.2 385W, Q.PEAK DUO L-G5.2 390W, Q.PEAK DUO L-G5.2 395W, Q.PEAK DUO-G5-BLK 305W, Q.PEAK DUO-G5-BLK 310W, Q.PEAK DUO-G5-BLK 315W, Q.PEAK DUO-G5-BLK 320W, Q.PEAK DUO-G5 315W, Q.PEAK DUO-G5 320W, Q.PEAK DUO-G5 325W, Q.PEAK DUO-G5 330W, Q.PEAK DUO-G5 305W, Q.PEAK DUO-G5 310W, Q.PEAK DUO-G5 315W, Q.PEAK DUO-G5 320W, Q.PRO L-G2 305, Q.PRO L-G2 310, Q.PRO L-G2 315
Hareon	HR-280P-24/Ba, HR-285P-24/Ba, HR-290P-24/Ba, HR-295P-24/Ba, HR-300P-24/Ba, HR-305P-24/Ba, HR-310P-24/Ba
Heliene	72P-285, 72P-290, 72P-295, 72P-300, 72P-310, 72P-320, 72P-325, 72P-330, 72P-335, 72P-340, 72M-345, 72M-350, 72M-360, 72M-365, 72M-370, 72M-BLK-345, 72M-BLK-350, 72M-BLK-360, 72M-BLK-365, 72M-BLK-370
Hyundai	HiS-M300TI, HiS-M305TI, HiS-M310TI, HiS-M315TI, HiS-M320TI, HiS-M325TI HiS-S325TI, HiS-S330TI, HiS-S335TI, HiS-S340TI, HiS-S345TI, HiS-S350TI

Itek Energy	IT250HE, IT255HE, IT260HE, IT265HE, IT270HE, IT275HE, IT280HE, IT285HE, IT290HE, IT295HE, IT300HE, IT305HE, IT310HE, IT315HE, IT295SE, IT300SE, IT305SE, IT310SE, IT315SE, IT350SE, IT355SE, IT360SE, IT365SE, IT370SE
JA Solar	JAM60D00-300/BP, JAM60D00-305/BP, JAM60D00-310/BP, JAM60D00-315/BP, JAM60D00-320/BP, JAM72D00-355/BP, JAM72D00-360/BP, JAM72D00-365/BP, JAM72D00-370/BP, JAM72D00-375/BP, JAM72S09-375/PR, JAM72S09-380/PR, JAM72S09-385/PR, JAM72S09-390/PR, JAM72S09-395/PR, JAM72S10-390/PR, JAM72S10-395/PR, JAM72S10-400/PR, JAM72S10-405/PR, JAM72S10-410/PR, JAM72S01-365/PR, JAM72S01-370/PR, JAM72S01-375/PR, JAM72S01-380/PR, JAM72S01-385/PR, JAP6 72-280/3BB, JAP6 72-285/3BB, JAP6 72-290/3BB, JAP6 72-295/3BB, JAP6 72-300/3BB, JAP6 72-305/3BB, JAP6 72-310/3BB, JAP6 72-315/3BB, JAP6 72-320/3BB
Jinko	JKM315M-60HL, JKM320M-60HL, JKM325M-60HL, JKM330M-60HL, JKM335M-60HL, JKM340M-60HL, JKM345M-60HL, JKM305M-60L, JKM310M-60L, JKM315M-60L, JKM325M-60L, JKM370-72L-V, JKM375-72L-V, JKM380-72L-V, JKM385-72L-V, JKM390-72L-V, JKM380-72HL-V, JKM385-72HL-V, JKM390-72HL-V, JKM395-72HL-V, JKM400-72HL-V
Kyocera	KD315GX-LFB, KU260-6MCA, KU265-6MCA, KD255GX-LFB2, KD260GX-LFB2
LG	LG275S1C-G4, LG280S1C-G4, LG285S1C-G4, LG300N1C-G4, LG300N1K-G4, LG300N1T-G4, LG305N1C-G4, LG305N1K-G4, LG310N1C-G4, LG310N1K-G4, LG310N1T-G4, LG315N1C-G4, LG320N1C-G4, LG335S2W-G4, LG340S2W-G4, LG360N2W-B3, LG365N2W-B3, LG365N2W-G4, LG370N2W-G4, LG375N2W-G4, LG380N2W-G4, LG385N2W-G4, LG390N2W-A5, LG395N2W-A5, LG400N2W-A5, LG405N2W-A5, LG410N2W-A5, LG415N2W-A5, LG420N2W-A5, LG425N2W-A5
LONGi	LR6-60PE-BOW-310W, LR6-60HPH-BOB-310W, LR672HPH-SOW-380W
Mission Solar	MSE290SQ5T, MSE295SQ5T, MSE300SQ5T, MSE300SQ8T, MSE305SQ8T, MSE310SQ8T, MSE340SO9J, MSE345SO9J, MSE350SO9J, MSE365SQ9S, MSE370SQ9S, MSE375SQ9S
Mitsubishi	PV-MLE270HD, PV-MLE275HD, PV-MLE280HD
Panasonic	VBHN325SA16, VBHN330SA16
Phono Solar Tech	PS255M-20/U, PS260M-20/U, PS265M-20/U, PS270M-20/U, PS275M-20/U, PS280M-20/U, PS300P-24T, PS305P-24T, PS310P-24T, PS315P-24T, PS320P-24T, PS325P-24T
REC Solar	REC310NP, REC315NP, REC320NP, REC325NP, REC330NP, REC275TP2, REC280TP2, REC285TP2, REC290TP2, REC295TP2, REC300TP2, REC275TP2 BLK2, REC280TP2 BLK2, REC285TP2 BLK2, REC330TP2S 72, REC335TP2S 72, REC340TP2S 72, REC345TP2S 72, REC350TP2S 72, REC355TP2S 72
Renesola	JC 255 M-24/Bbs, JC 260 M-24/Bbs, JC 265 M-24/Bbs, JC 270 M-24/Bbs, JC 250 M-24/Bb, JC 255 M-24/Bb, JC 260 M-24/Bb, JC 305 M-24/Abs, JC 310 M-24/Abs, JC 315 M-24/Abs, JC 320 M-24/Abs, JC 325 M-24/Abs, JC 330 M-24/Abs, JC 335 M-24/Abs, JC 330 S-24/Abs, JC 335 S-24/Abs, JC 340 S-24/Abs, JC 345 S-24/Abs, JC 270 S-24/Bbs, JC 280 S-24/Bbs, JC 285 S-24/Bbs

Sanyo	HIP-190BA3, HIP-195BA3, HIP-200BA3, HIP-205BA3, HIT-N215A01, HIT-N220A01, HIT-N225A01
Seraphim	SRP-335-6MA, SRP-340-6MA, SRP-345-6MA, SRP-350-6MA, SRP-360-6MA, SRP-365-6MA, SRP-370-6MA, SRP-375-6MA, SRP-330-6MA-DG, SRP-335-6MA-DG, SRP-340-6MA-DG, SRP-345-6MA-DG, SRP-355-6MA-DG, SRP-360-6MA-DG, SRP-365-6MA-DG, SRP-370-6MA-DG, SRP-280-6MB, SRP-285-6MB, SRP-290-6MB, SRP-295-6MB, SRP-300-6MB, SRP-305-6MB, SRP-310-6MB, SRP-315-6MB, SRP-275-6MB-DG, SRP-280-6MB-DG, SRP-285-6MB-DG, SRP-290-6MB-DG, SRP-295-6MB-DG, SRP-300-6MB-DG, SRP-305-6MB-DG, SRP-310-6MB-DG, SRP-315-6MB-DG, SRP-280-6MB-HV, SRP-285- SRP-280-6MB, SRP-285-6MB, SRP-290-6MB, SRP-295-6MB 6MB-HV, SRP-290-6MB-HV, SRP-295-6MB-HV, SRP-300-6MB-HV, SRP-305-6MB-HV, SRP-310-6MB-HV, SRP-315-6MB-HV, SRP-325-6PA, SRP-330-6PA, SRP-335-6PA, SRP-340-6PA, SRP-320-6PA-DG, SRP-330-6PA-DG, SRP-335-6PA-DG, SRP-340-6PA-DG, SRP-325-6PA-HV, SRP-330-6PA-HV, SRP-335-6PA-HV, SRP-340-6PA-HV, SRP-270-6PB, SRP-275-6PB, SRP-280-6PB, SRP-285-6PB, SRP-265-6PB-DG, SRP-270-6PB-DG, SRP-275-6PB-DG, SRP-280-6PB-DG, SRP-270-6PB-HV, SRP-275-6PB-HV, SRP-280-6PB-HV, SRP-285-6PB-HV
Silfab	SLA280M, SLA285M, SLA290M, SLA295M, SLA300M, SLA310M, SLA315M, SLA320M, SLG335M, SLG340M, SLG345M, SLG350M, SLG355M, SLG360M, SLG370M, SLG380M, SLA320MCH, SLA320MWT
Solaria	PowerXT-350R-AC, PowerXT-355R-AC, PowerXT-360R-AC, PowerXT-320R-BX, PowerXT-325R-BX, PowerXT-325R-PX, PowerXT-330R-PX, PowerXT-340R-BD, PowerXT-345R-BD, PowerXT-345R-PD, PowerXT-350R-PD, PowerXT-355R-PD, PowerXT-360R-PD, PowerXT-410C-PD, PowerXT-420C-PD, PowerXT-430C-PD
SolarWorld (V2.5 frame)	Sunmodule SW series: SW 220 mono and poly, SW 225 poly, SW 230 poly, SW 235 poly, SW 240 mono and poly, SW 245 mono and poly, SW 250 mono, SW 255 mono, SW 260 mono, SW 265 mono, SW 270 mono Sunmodule Plus series: 285W mono, 280W mono, 275W mono, 270W mono, 265W mono, 260W mono, 255W mono, 250W mono, Sunmodule Protect 275W mono, Sunmodule Protect 270W mono, Sunmodule Protect 265W mono, Sunmodule SW 245 - 255 poly / Pro-Series
SolarWorld (33mm frame)	Sunmodule Pro-Series: 250W poly, 255W poly, 260W poly, 315W XL mono, 320W XL mono, 325W XL mono, 330W XL mono, 335W XL mono, 340W XL mono, 345W XL mono, 350W XL mono Sunmodule Plus: 260W mono, 270W mono, 275W mono, 280W mono, 285W mono
Stion	STO-135A, STO-140A, STO-145A, STO-150A
SunEdison	F310EzD, F315EzD, F320EzD, F325EzD, F330EzD, F335EzD, F310EzC, F315EzC, F320EzC, F325EzC, F330EzC, F335EzC, R330EzC, R335EzC, R340EzC, R345EzC, R350EzC, R355EzC
SunPower	SPR-318E-WHT-D, SPR-A400, SPR-A415, SPR-A425, SPR-E19-235, SPR-E19-310-COM, SPR-E19-320, SPR-E20-245, SPR-E20-327, SPR-E20-320-COM, SPR-E20-327-COM, SPR-E20-435-COM, SPR-E20-327-D-AC, SPR-P17-330-COM, SPR-P17-

	335-COM. SPR-P17-340-COM, SPR-P17-345-COM, SPR-P17-350-COM, SPR-P17-355-COM, SPR-P17-360-COM, SPR-X20-250-BLK, SPR-X20-250-BLK-B-AC, SPR-X20-327-C-AC, SPR-X21-335-BLK, SPR-X21-335-BLK-D-AC, SPR-X21-335-D-AC, SPR-X21-345, SPR-X21-345-COM, SPR-X21-345-D-AC, SPR-X21-350-BLK, SPR-X21-350-BLK-D-AC, SPR-X21-355-BLK, SPR-X21-445-COM, SPR-X21-460-COM, SPR-X21-460-COM, SPR-X21-470-COM, SPR-X22-360, SPR-X22-370, SPR-X22-360-COM, SPR-X22-360-D-AC, SPR-X22-370-D-AC
Trina	TSM-225 PC/PA05, TSM-230 PC/PA05, TSM-235 PC/PA05, TSM-240 PC/PA05, TSM-245 PC/PA05
Yingli	YL230P-29b, YL235P-29b, YL240P-29b, YL245P-29b

Fault Current Path Diagram

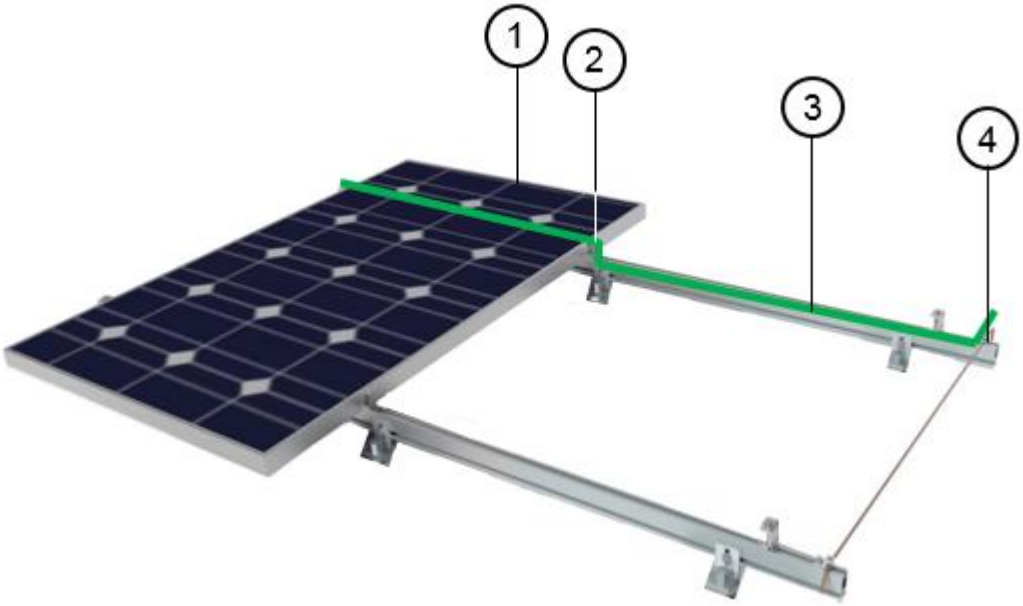

Items are listed in the fault current path in order from the PV Panel to the Grounding Lug:

1. PV Panel
2. Grounding Mid Clamp Kit
3. Helio Rail HR150, HR250, HR350 and/or HR500
4. Grounding Lug

Fault Current Path

EZ Tile Hook Mount Series:

SunModo offer 4 choices of tile hooks for vertical rail orientations and 4 hooks for flat mounting for strut type rails. The hook provide a nominal 110 pound load and uplift capability when mounted into roof trusses with two lag bolts. Another feature of the tile hook is the tile hook base, a gasket underneath the hook. The EZ Tile Hook Mounts includes Roof Hook with EPDM Hook Base Gasket (attached) and two 1/4 x 3-1/2" Lag Bolts with Sealing Washers.

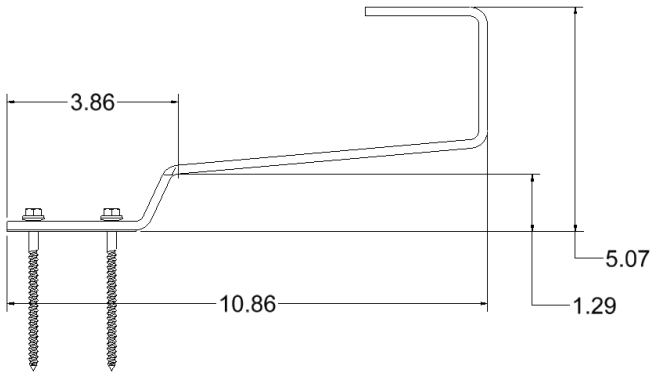

K10167-001 | Strap Tile Hook Kit, Horizontal

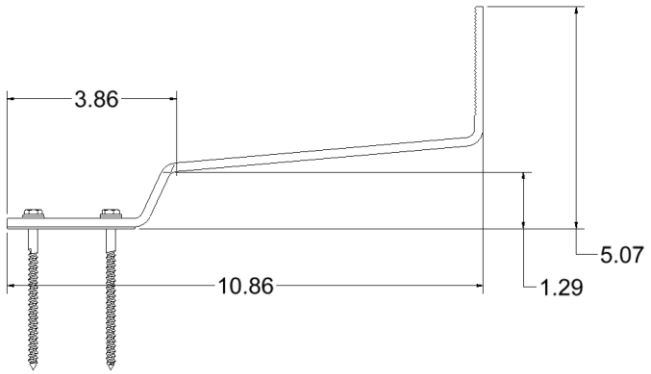

K10168-001 | Strap Tile Hook Kit, Vertical

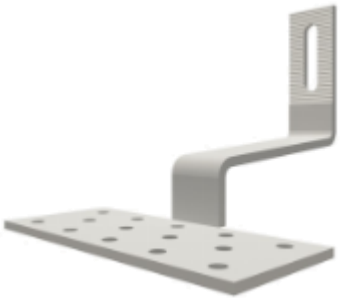

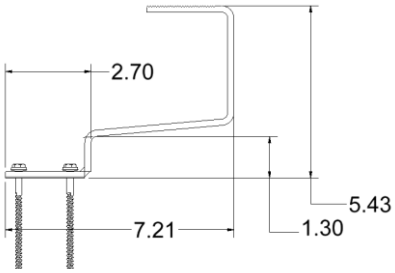

K10169-001 | Multi-Screw Tile Hook Kit, Horizontal

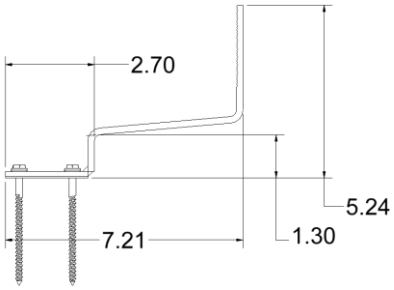

K10170-001 | Multi-Screw Tile Hook Kit, Vertical

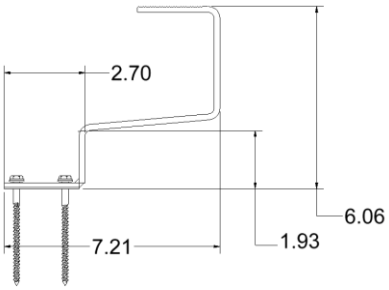

K10171-001 | Spanish Tile Multi-Screw Hook Kit, Horizontal

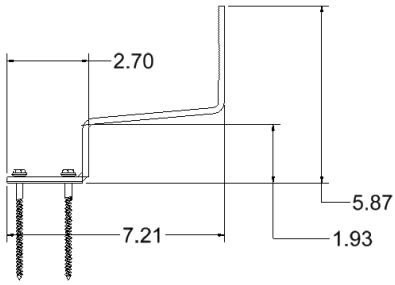

K10172-001 | Spanish Tile Multi-Screw Hook Kit, Vertical

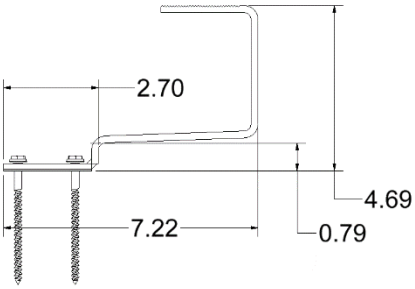

K10173-001 | Flat Tile Multi-Screw Hook Kit, Horizontal

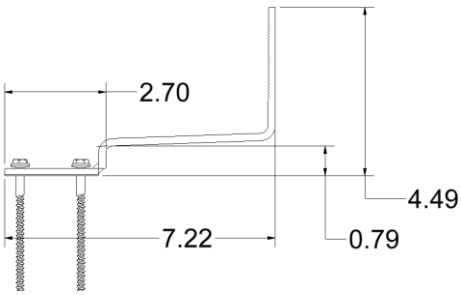

K10174-001 | Flat Tile Multi-Screw Hook Kit, Vertical

Additional Components:

	1/4 X Stainless Steel Lag Bolts	B15033-002 1/4 X 3-1/2" Stainless Steel Lag Bolt
	Sealing washer	B15019-001 1/4 Sealing Washer
	Aluminum L-Foot available in clear and black. 3/8" Flange Nut and Bolt included.	K10066-XXX Standard L-Foot Kit K10096-XXX Tall L-Foot Kit
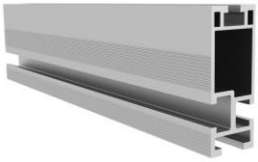	Helio Rails: Features both 1/4" and 3/8" side slots, and 1/4" top slot for clamping PV panels. Available in 124" and 166" lengths. Last 3 digits denote rail length. 4 stock sizes in clear and black.	A20144-XXX (Clear) A20144-XXX-BK (Black) HR250 (Standard Rail) A20145-XXX (Clear) A20145-XXX-BK (Black) HR350 (Heavy Rail) A20146-XXX (Clear) A20146-XXX-BK (Black) HR500 (Super Rail)
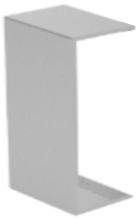	Metal Rail End Caps available for Helio Standard and Heavy rails (optional)	A20284-001 A20284-BK1 (Black) HR250 (Helio Standard) A20285-001 HR350 (Helio Heavy) A20263-001 HR500 (Helio Super)
	3/8" Slot Rail Splice Kit with 2X 3/8-16 hex bolts and flange nuts with integral grounding. ***May be repositioned until torqued to final value.***	K10178-001 HR250/HR350 3/8" Splice **For single-use only**

	1/4” Slot Rail Splice Kit with 4X bolts and flange nuts with integral grounding**. *May be repositioned until torqued to final value.***	K10177-001 K10177-BK1 HR250/HR350 1/4” Splice **For single-use only**
	End Clamp Kit, fits panel height from 31 to 50 mm. For last 3 digits, see Table on last page.	K10224-1XX
	Adjustable End Clamp Kit, fits panel height from 33 to 50 mm. Adjustable End Clamp Kit, fits panel height from 30 to 46 mm.	K10299-001 K10299-BK1 K10299-002 K10299-BK2
	Grounding Mid Clamp Kit fits panel height from 31 to 50 mm. ***May be repositioned until torqued to final value.***	K10180-001 **For single-use only**
	Grounding End Clamp Kit with shared rail adaptor for standard rail; fits panel height from 31 to 50 mm. For last 3 digits, see table on last page. ***May be repositioned until torqued to final value.***	K10183-1XX **For single-use only**
	Grounding Mid Clamp Kit with shared rail adaptor for standard rail; fits panel height from 31 to 50 mm. ***May be repositioned until torqued to final value.***	K10182-001 **For single-use only**

	Grounding Lug Kit with Grounding Spacer and 1/4-20 T-Bolt. ***May be repositioned until torqued to final value.***	K10179-001 **For single-use only**
	HR150 (Open Rail): Features wire management channel and both 1/4" and 3/8" side slots, and 1/4" top slot for clamping PV panels. Last 3 digits denote rail length.	A20242-XXX (Clear) A20242-XXX-BK (Black) HR150 (Open Rail)
	1/4" Slot Open Rail Splice Kit with 4X 1/4-20 Bolts and Flange Nuts with integral grounding**.** ***May be repositioned until torqued to final value.***	K10236-001 HR150 Splice Kit **For single-use only**
	Rail End Caps available for HR150 rails (optional)	A20250-001 (Clear) A20250-BK1 (Black) HR150 Rail End Cover

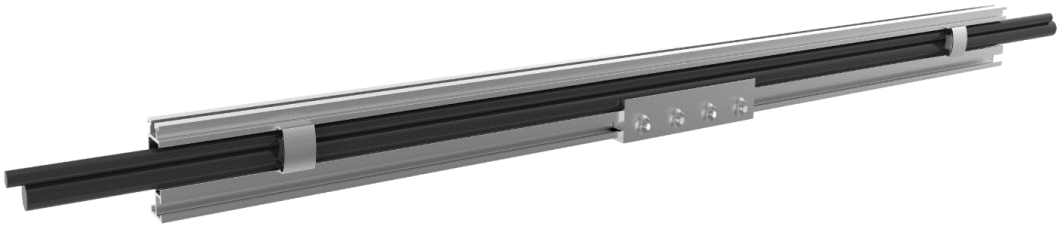

The HR150 family of products are shown assembled above. Two HR150 Rails are spliced together with an HR150 Rail Splice. PV electrical wires are shown routed in the channels of the HR150 Rails, retained with two HR150 Channel Clips snapped into place.

Tools Required for Installation

Electric Drill or Impact Driver.
Note that the use of an impact driver is strongly discouraged for all stainless nut and bolt hardware.

Roofing Bar

Drill Bit for lag bolts, pilot hole 7/32” diameter for 5/16” lag bolt

3/8” Socket wrench

Sockets for 3/8” drive sockets, 7/16”, 1/2”, 9/16” and 1-1/16”

Torque Wrench 3/8” drive, 0 to 35 ft. lbs.

Anti-seize compound (Permatex 80071 or equivalent).

Caulk gun and silicon sealant

- ChemLink M1 (or equivalent) for wood and composite roofs.
- ChemLink DuraLink (or equivalent) for metal roofs.

Tape measure

Saws for cutting aluminum posts and rails as necessary

Torque Values:
These values must be adhered to for mechanical strength. It is required that a torque wrench be used to measure the bolt torque during final assembly, and it is recommended that anti-seize compound, such as Permatex, be applied to the screw threads.

Hardware	Torque
1/4-20 Bolts and Hex Flange Nut	7.5 ft. lbs.
1/4-20 Ground Lug, Flange Nut with 7/16 Hex Head	7.5 ft. lbs.
1/4-20 Ground Lug, Setscrew with 1/8 Allen drive	4.2 ft. lbs. (50 in. lbs.)
1/4-20 Mid or End Clamp, Female Standoff with 7/16” Hex Head Collar Nut	7.5 ft. lbs.
1/4 Lag Bolt	12 ft. lbs.
5/16 Lag Bolt	25 ft. lbs.
3/8” Bolts and Hex Flange Nuts	15 ft. lbs.
3/8” T-Bolts and Hex Flange Nuts	15 ft. lbs.
1-1/16” HEX Cap	15 ft. lbs.

Installation Instructions:

Step 1: Attaching

1. Using a roofing bar, gently remove the tile from the desired location gaining access to the interior of the roof. Locate and mark the center of the rafter.
2. Rest the base of the EZ Tile Hook over the center of the rafter and mark center of holes. Drill two 11/64" pilot holes in accordance with the NDS guidelines.
3. Clean away any roof debris and fill the two pilot holes with structural sealant, ChemLink M1 or equivalent.
4. Attach the EZ Tile Hook using the two 1/4 x 3-1/2” Lag Bolts with Sealing Washers, torque to 12ft-lbs.

1. **Step 2: Waterproofing** (Materials not provided)

5. Because of the EPDM gaskets design, separate flashing is NOT required.
6. If your local code agency requires a secondary waterproof flashing proceed with waterproofing using three-course method or lapped paper method.
7. For additional waterproofing install a long strip of EPDM foam gasket between the EZ Tile Hook and the top edge of the lower tile. Place a short strip of EPDM foam gasket on top of the EZ Tile Hook to insure water does not travel up the hook and onto the underlayment of the roof.

Step 3: Finishing

8. To ensure the tile sits flush with the roof it may be necessary to notch the bottom of the tile to make space for the raised EZ Tile Hook.
9. Reinstall the tile.

Step 4: L-Foot Assembly

10. Attach an L-Foot to the EZ Tile Hook using a 3/8” Bolt and Flange Nut, torque to 15ft-lbs.

Step 5: Rail Assembly

11. Install AL Rail to L-Foot then tighten 3/8” Flange Nut to 15 ft-lbs. torque.

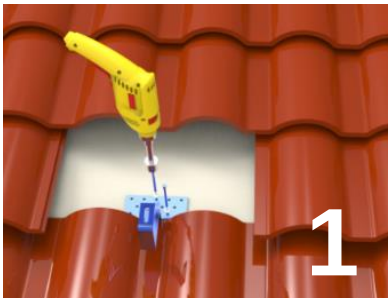

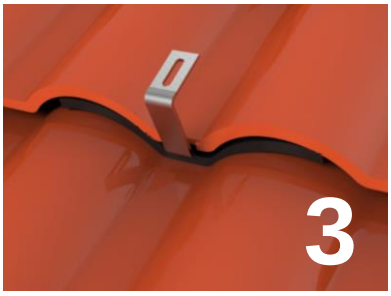

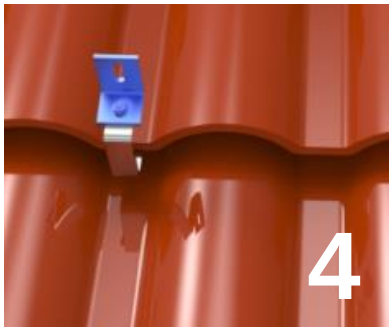

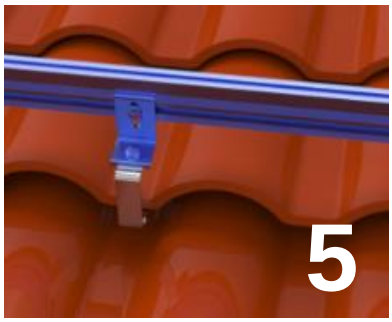

Portrait Panel Configuration:
With a full range of components the Pitch Roof System can be configured in an endless variety of designs. The system is IBC compliant for roof waterproofing tested by IAPMO, UL 1703 compliant for Class-A Fire Rated for Type 1 and 2 PV Modules and UL 2703 compliant for electrical bonding tested by ETL.

Proceed with the mounting of the PV panels using the Mid and End Clamps. Specific mounting instructions are shown in the following sections for portrait mounting.

A typical portrait roof layout features two East-West rails mounted to North-South roof rafters with an L-Foot. Mid Clamps are used between PV panels, they will produce 1/2" spacing between PV panel frames. End Clamps are used to secure PV panels at the ends of a row.

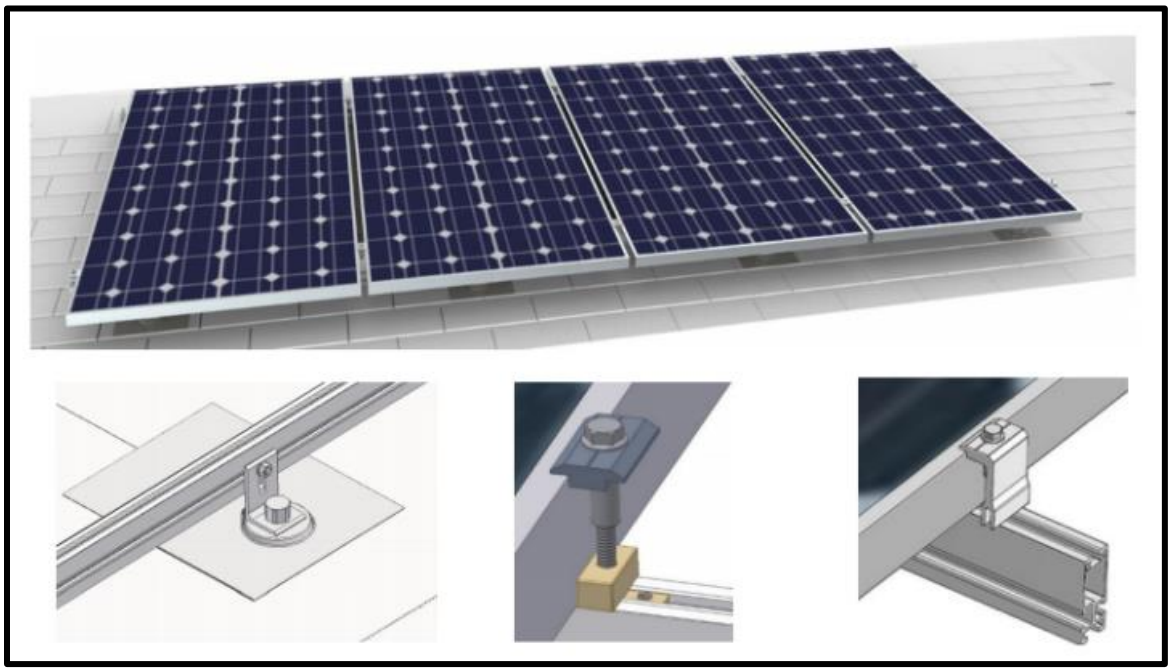

Minimum Panel Height

Minimum leading edge height to meet a UL1703 PV module fire standard is 3 inches.

3 inch minimum
from bottom of PV module
frame to the roof covering

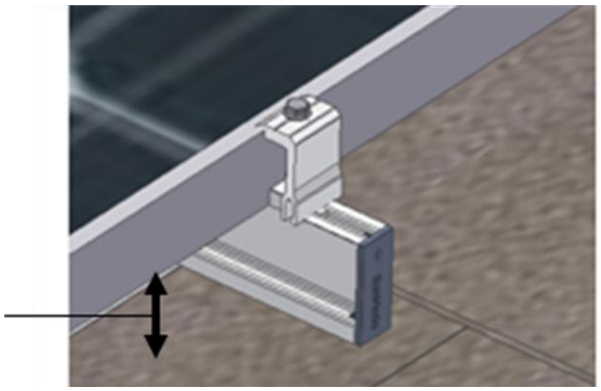

End Clamp Attachment

There must be a minimum of 1.5 inches of Rail extending beyond the PV panel frame.

Clamp the PV panel frame by inserting the T-Bolt into the Rail slot. Position the End Clamp firmly against the PV panel frame and secure using the 1/4-20 Collar Bolt. Using a 7/16" socket, torque to 7.5 ft. lbs.

Note: When two or more PV panels are installed grounding via the End Clamp is optional. For a single panel configuration (shown), insert the T-Bolt into a T-Bolt Holder for grounding the panel to the Rails.

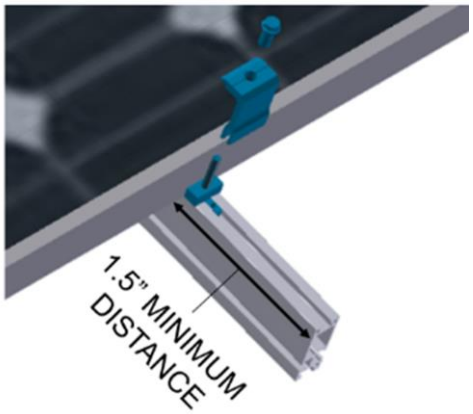

Mid Clamp Attachment

Insert the T-Bolt in the Rail slot and turn clockwise 90° to engage the head into the slot. Insert Grounding T-Bolt Holder to lock T-Bolt in place.

Thread the 1/4-20 Collar Bolt onto the top of the T-Bolt as shown. After positioning the Mid Clamp firmly against the PV panel frame, using a 7/16" socket, tighten to 7.5 ft. lbs.

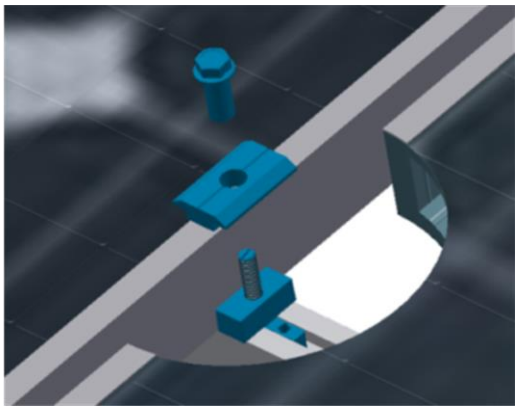

Landscape Panel Configuration:
The Pitched Roof System conveniently accommodates landscape configurations to minimize roof time and parts required. The system is IBC compliant for roof waterproofing tested by IAPMO, UL 1703 compliant for Class-A Fire Rated for Type 1 and 2 PV Modules and UL 2703 compliant for electrical bonding tested by ETL.

Proceed with the mounting of the PV panels using the Mid and End Clamps. Specific mounting instructions are shown in the following section for landscape mounting. Mid Clamps are used between PV panels, they will produce 1/2" spacing between PV panel frames. End Clamps are used to secure PV panels at the ends of a row. Note that the PV panels are clamped on the long edges as required by most manufacturers.

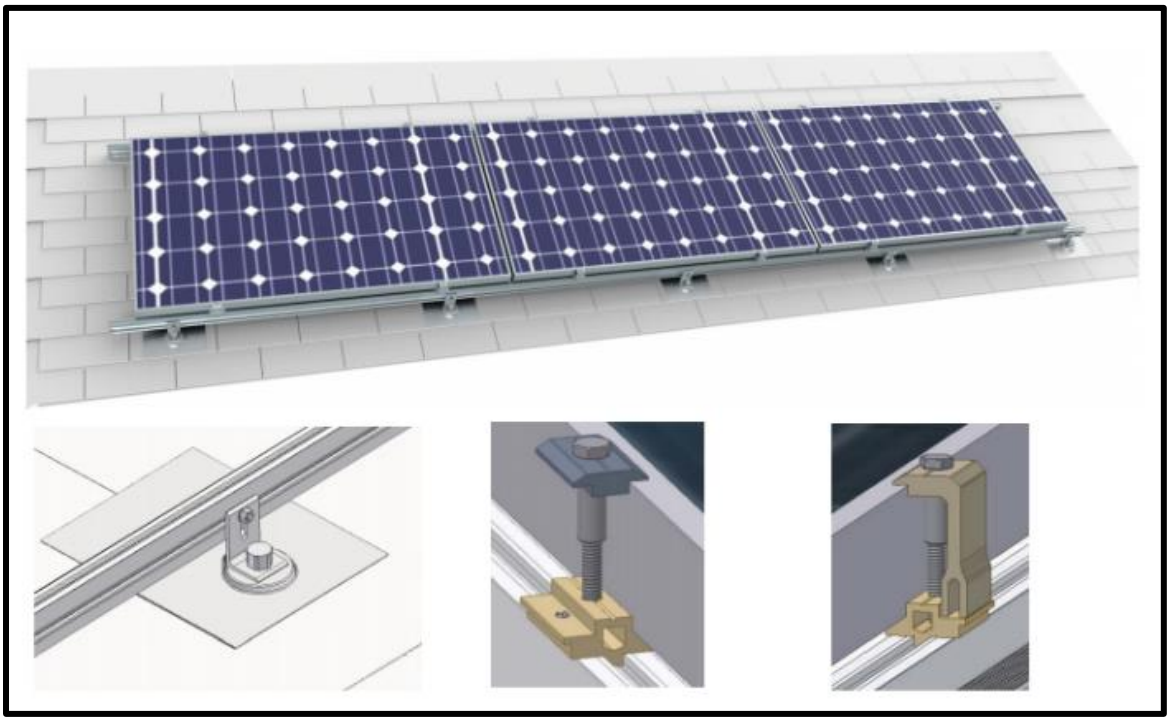

Minimum Panel Height

Minimum leading edge height to meet a UL1703 PV module fire standard is 3 inches.

3 inch minimum
from bottom of PV module
frame to the roof covering

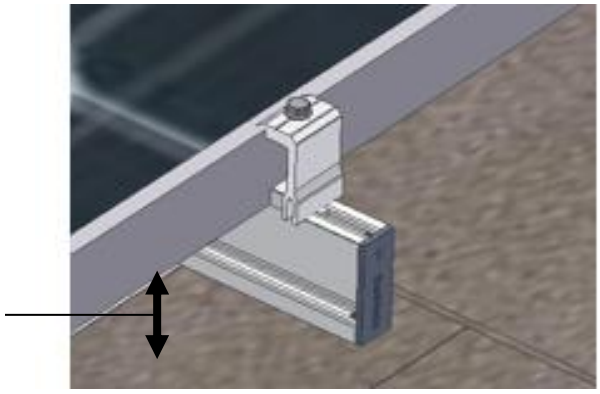

End Clamp Attachment

End Clamps are used at the ends of a row of PV panels.

Insert the T-Bolt in the Rail slot and turn clockwise 90° to engage the head into the slot. Insert Grounding T-Bolt Holder to lock T-Bolt in place.

Thread the 1/4" Collar Bolt onto the top of the T-Bolt as shown. After positioning the End Clamp firmly against the PV panel frame, using a 7/16" socket, tighten to 7.5 ft. lbs.

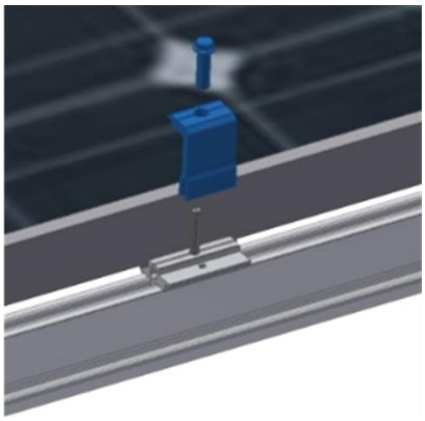

Mid Clamp Attachment

Insert the T-Bolt in the Rail slot and turn clockwise 90° to engage the head into the slot. Insert Grounding T-Bolt Holder to lock T-Bolt in place.

Thread the 1/4" Collar Bolt onto the top of the T-Bolt as shown. After positioning the Mid Clamp firmly against the PV panel frame, using a 7/16" socket, tighten to 7.5 ft. lbs.

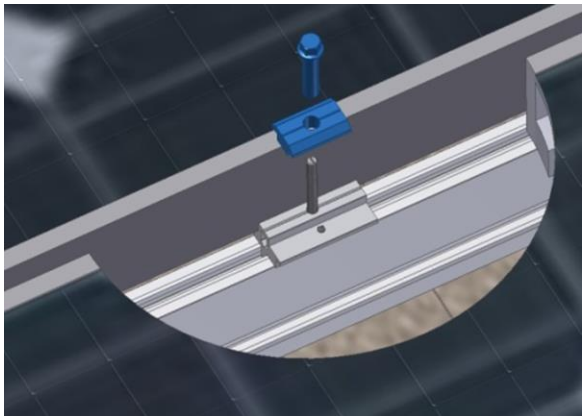

Ground Wire Attachment

The picture shows a grounding lug mounted on one Rail per row of panels, and a #6 solid copper grounding wire connecting the Ground Lugs to the building ground per NEC 690.47.	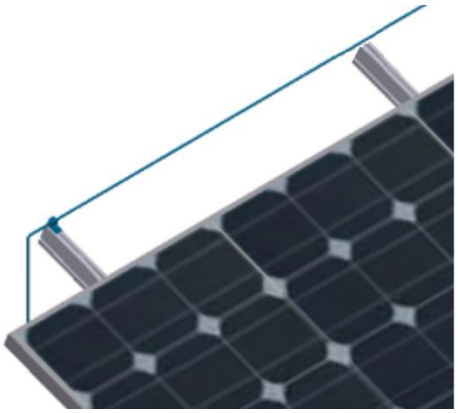

Ground Lug Installation

One Rail per row of panels should have a Ground Lug for fastening the ground conductor to the array. The Ground Lug is mounted on the top or side of the Rail using a special 1/4" T-Bolt, Grounding Spacer, and Flange Nut. Grounding Lugs K10179-001, and detailed installation document D10003 are available from SunModo separately.	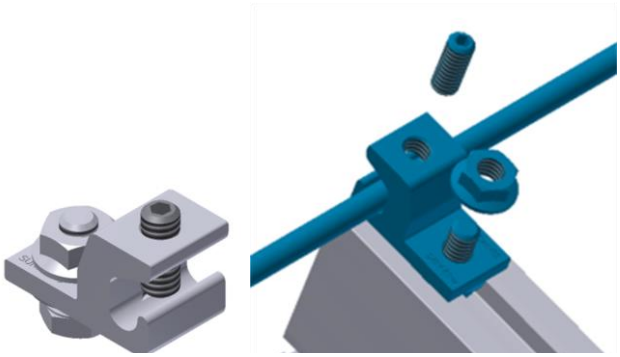

Rail End Covers

Rail End Covers can be attached to the mounting rails as shown. Rail End Covers are also available for the SunBeam Rail not shown.	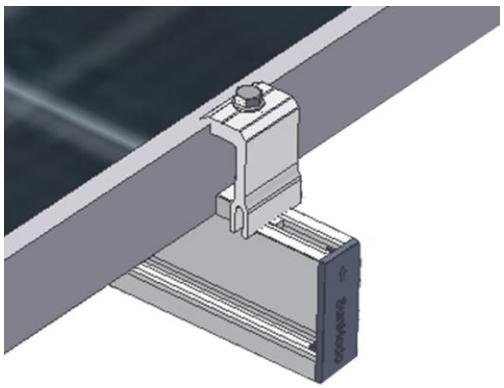

UL 2703 Label Placement

When requested the UL 2703 Label can be located on East-West running Rail or Rail Splice.

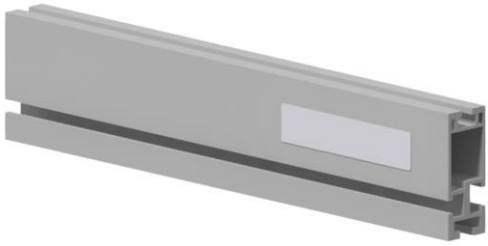

See www.sunmodo.com for current warranty documents and information.

SunModo Corporation
Ph: 360-844-0048