SunModo PV Rack Mounting System

UL2703 Compliant

Pub. D10005-V027

Please read carefully before installing

Product is tested to and recognized to UL 2703 standards for safety grounding and bonding equipment and meets UL 1703 fire standards.

SunModo PV Rack Mount System can be used to mount photovoltaic (PV) panels in a wide variety of locations. All installations shall be in accordance with NEC requirements in the USA. The self-bonding system is for use with PV modules that have a maximum series fuse rating of 30A. Mechanical design loads per UL 2703: Downward Pressure: 33.42 psf (1600.2 Pa), Upward Pressure: 33.42 psf (1600.2 Pa), Down-Slope: 5 psf (239.4 Pa). Mechanical test loads per LTR AE 2012: Downward Pressure: 50.125 psf (2400 Pa), Upward Pressure: 50.125 psf (2400 Pa).

TABLE OF CONTENTS

SunModo Corporation:
Vancouver, Washington
www.SunModo.com
Ph: 360-844-0048
info@sunmodo.com

Document Number D10005-V027

Intertek
5001753

Installer Responsibility

Before ordering and installing materials, all system layout dimensions should be confirmed by field measurements. SunModo reserves the right to alter, without notice, any details, proposals or plans. Any inquiries that you may have concerning installation of the PV system should be directed to your SunModo Sales representative. Consult SunModo Sales for any information not contained in this manual. This manual is intended to be used as a guide when installing SunModo EZ SunBeam Flat Mount systems. It is the responsibility of the installer to ensure the safe installation of this product as outline herein.

- Installer shall employ only SunModo products detail herein. The use of non SunModo components can void the warranty and cancel the letters of UL compliance.
- Installer shall guarantee that screws and anchors have adequate pullout strength and shear capacities.
- Installer shall adhere to the torque values specified in this Instruction Manual.
- Installer shall use anti-seize compound, such as Permatex anti-seize, lubricant is recommended for all threaded parts.
- Installer shall adhere to all relevant local or national building codes. This takes account of those that supplant this document's requirements.
- Installer shall guarantee the safe placement of all electrical details of the PV array.
- Installer shall comply with all applicable local, state and national building codes, including periodic re-inspection of the installation for loose components, loose fasteners and any corrosion, such that if found, the affected components are to be immediately replaced.
- Installer to ensure the structural support members or footings for mounting the array can withstand all code loading conditions. Consult with licensed professional engineer for the appropriate loading conditions.
- Installer to follow all regional safety requirements during installation.
- This racking system may be used to ground and/or mount a PV module complying with UL 1703 only when the specific module has been evaluated for grounding and/or mounting in compliance with the included instructions.
- Installer shall ensure bare copper grounding wire does not contact aluminum and zinc-plated steel components to prevent risk of galvanic corrosion.
- If loose components or loose fasteners are found during periodic inspection, re-tighten immediately. If corrosion is found, replace affected components immediately.

Safety

Review relevant OSHA and other safety standards before following these instructions. The installation of solar PV systems is a dangerous procedure and should be supervised by trained and experienced personnel.

It is not possible for SunModo to be aware of all the possible job site situations that could cause an unsafe condition to exist. The installer of the roof system is responsible for reading these instructions and determining the safest way to install the ground system. These instructions are provided only as a guide to show a knowledgeable, trained erector the correct part placement one to another. If following any of the installation steps would endanger a worker, the erector should stop work and decide upon a corrective action. Provide required safety railing, netting, or safety lines for crew members working on the roof.

SunModo Self-grounding system

SunModo developed a proprietary grounding and bonding system that is built into the mounting hardware for the rails, clamps and splices. We provide further grounding through all of the SunBeam racking components including the Pipe Caps, Beams, Posts and Post Base Plates. All hardware meet UL 2703 Grounding and Fire Standards tested by ETL.

The basis of the system is our patented stainless steel floating grounding pin which is designed to be captive in the mounting components and provides a bonding path from the PV panel frames to the rails and rail splices, and finally to the ground lug. The self-grounding and bonding system is for use with PV modules that have a maximum series fuse rating of 30A. The maximum number of PV modules is limited by the system voltage, so if a system has multiple inverters, the SunModo racking system can theoretically go on forever.

Finally, we have added a spring and a threadlocker to our Mid Clamp assemblies. The spring keeps the Mid Clamp in the open position ready to receive the solar module. The threadlocker is a light bonding agent allowing the T-Bolt engagement into the Rail when the Collar Nut is turned from above. The threadlocker has the added benefit of being an anti-seize agent for stainless steel hardware in the area where it is applied. For additional anti-seize protection refer to the 'Tools Required for Installation' section of this document.

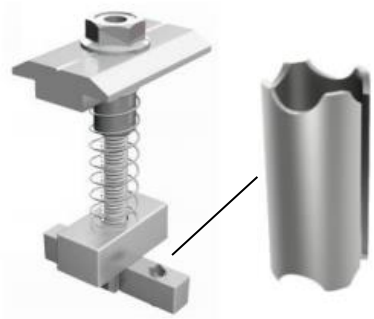

Mid Clamp with Ground Pins

Similarly, the rail splices the grounding pins, eliminating the need for extra bonding components.

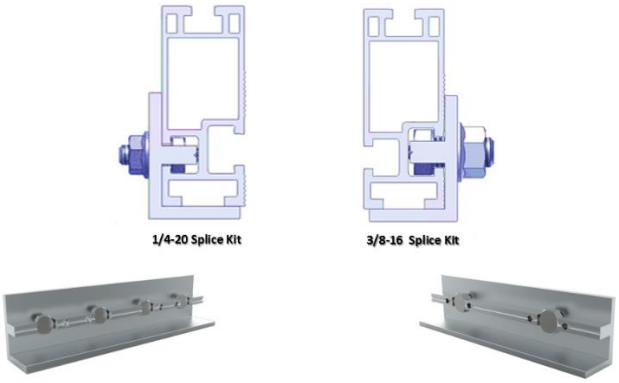

EZ SunBeam Flat Roof System Components

	End Clamp Kit, fits panel height from 31 to 50 mm. For last 3 digits, see table on last page.	K10224-1XX K10224-1XX-BK
	Adjustable End Clamp Kit, fits panel height from 33 to 50 mm. Adjustable End Clamp Kit, fits panel height from 30 to 46 mm.	K10299-001 K10299-BK1 K10299-002 K10299-BK2
	Grounding Mid Clamp Kit fits panel height from 31 to 50 mm. ***May be repositioned until torqued to final value.***	K10180-001 K10180-001-BK **For single-use only**
	Grounding End Clamp Kit with shared rail adaptor for standard rail; fits panel height from 31 to 50 mm. For last 3 digits, see table on last page. ***May be repositioned until torqued to final value.***	K10183-1XX K10183-1XX-BK **For single-use only**
	Grounding Mid Clamp Kit with shared rail adaptor for standard rail; fits panel height from 31 to 50 mm. ***May be repositioned until torqued to final value.***	K10182-001 K10182-001 **For single-use only**

	Grounding Lug Kit with Grounding Spacer and 1/4-20 T-Bolt. ***May be repositioned until torqued to final value.***	K10179-001 **For single-use only**
	L-Foot Kit to connect brace to underside of SunBeam.	K10066-010
	SunBeam Angle Mount joins SunBeam to Rail. Includes 4X 3/8-16 T-Bolts and flange nuts.	K10103-004
	SB2500 SunBeam Cover (optional)	A20237-001
	SB3500 Triangular Beam Cover (optional)	A20261-001
	Metal Rail End Caps available for Helio Standard and Heavy rails (optional)	A20284-001 A20284-BK1 (Black) HR250 (Helio Standard) A20285-001 HR350 (Helio Heavy) A20263-001 HR500 (Helio Super)

	Metal Rail End Caps available for HR150 rails (optional)	A20250-001 (Clear) A20250-BK1 (Black) HR150 Rail End Cover
	SunBeam Diagonal Brace available in 48”, 67” and 92” lengths. Last 3 digits denote tube length.	A20164-0XX
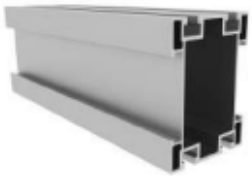	SB2500 aluminum beam is available in 164”and 206” lengths. Last 3 digits denote length.	A20143-XXX SB2500 (SunBeam)
	SB3500 aluminum triangular beam is available in 206”, 228” and 288” lengths. Last 3 digits denote rail length. 4 stock sizes in clear and black.	A20243-XXX SB3500 (Triangular Beam)
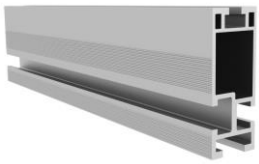	Helio Rails: Features both 1/4” and 3/8” side slots, and 1/4” top slot for clamping PV panels. Available in 124”, 166” and 206” lengths. Last 3 digits denote rail length. 4 stock sizes in clear and black.	A20144-XXX (Clear) A20144-XXX-BK (Black) HR250 (Standard Rail) A20145-XXX (Clear) A20145-XXX-BK (Black) HR350 (Heavy Rail) A20146-XXX (Clear) A20146-XXX-BK (Black) HR500 (Super Rail)
	HR150 (Open Rail): Features wire management channel and both 1/4” and 3/8” side slots, and 1/4” top slot for clamping PV panels. Available in 124” and 166” lengths. Last 3 digits denote rail length. 4 stock sizes in clear and black.	A20242-XXX (Clear) A20242-XXX-BK (Black) HR150 (Open Rail)

	2” or 2.5” AL Schedule 10 Pipe cut to length for array design. Last 3 digits denote pipe length.	A20189-XXX 2.375” OD AL Sch. 10 Pipe A20209-XXX 2.875” OD AL Sch. 10 Pipe
	2.375” X 13 gauge and 2.875” X 13 gauge tube cut to length for array design. Last 3 digits denote pipe length.	A21022-XXX Steel Tube
	SB2500 SunBeam Splice includes 4X 3/8-16 T-Bolts and flange nuts.	K10104-001 SB2500 Splice Kit
	SB3500 aluminum Triangular Beam splice kit.	K10238-001 SB3500 Splice Kit
	3/8” Slot Rail Splice Kit with (2) 3/8-16 hex bolts and flange nuts with integral grounding. ***May be repositioned until torqued to final value.***	K10178-001 K10178-BK1 HR250/HR350 3/8” Splice **For single-use only**
	1/4” Slot Rail Splice Kit with (4) bolts and flange nuts with integral grounding**. *May be repositioned until torqued to final value.***	K10177-001 K10177-BK1 HR250/HR350 1/4” Splice **For single-use only**

	1/4” Slot Rail Splice Kit with (4) 1/4-20 Bolts and Flange Nuts with integral grounding**. *May be repositioned until torqued to final value.***	K10236-001 HR150 1/4” Splice **For single-use only**
	Pipe Cap Kit, includes setscrews, 4X 3/8-16 T-Bolts and Flange Nuts, Grounding Washer and other hardware.	K10218-001 2.0” AL Sch. 10 Pipe K10223-001 2.5” AL Sch. 10 Pipe
	Post Base Plate Kits for 2.0” AL Schedule 10 Pipes includes 3X Screws.	K10302-001 2.375” OD AL Sch. 10 Pipe
	Steel Post Base Kits for 2.375” OD and 2.875” OD tubing includes 3X Screws.	K10268-003 2.375” OD Steel Post Kit K10268-004 2.875” OD Steel Post Kit
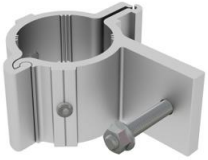	SunBeam Pipe Clamp Kit available in 2.0” and 2.5” with hardware included.	K10219-001 2.0” AL Sch.10 Pipe K10222-001 2.5” AL Sch.10 Pipe
	Side Mount Pipe Cap Kit includes 3/8-16 T-Bolt, Flange Nuts and 4X M10 Set Screws.	K10184-001 2.0” AL Sch. 10 Pipe K10184-002 2.5” AL Sch. 10 Pipe

List of Compliant PV Modules

UL 2703 Qualified Modules for use with SunModo PV Racking Systems

Evaluated PV Modules	
Module manufacturer	**Model numbers**
Boviet Solar	BVM6610M-250, BVM6610M-255, BVM6610M-260, BVM6610M-265, BVM6610M-270, BVM6610M-275, BVM6610M-280, BVM6610-305, BVM6610-310, BVM6610-315, BVM6610-320, BVM6612M-325, BVM6612M-330, BVM6612M-335, BVM6612M-340, BVM6612M-345, BVM6612M-350, BVM6610P-250, BVM6610P-255, BVM6610P-260, BVM6610P-265, BVM6610P-270, BVM6610P-275, BVM6612P-310, BVM6612P-315, BVM6612P-320, BVM6612P-325, BVM6612P-330, BVM6612P-335, BVM6612P-340, BVM6612P-345, BVM6612P-350, BVM6612P-355
C-Sun	CSUN290-72P, CSUN295-72P, CSUN300-72P, CSUN305-72P, CSUN310-72P, CSUN285-72M, CSUN290-72M, CSUN295-72M, CSUN300-72M, CSUN305-72M, CSUN310-72M, CSUN315-72M, CSUN320-72M, CSUN235-60M, CSUN240-60M, CSUN245-60M, CSUN240-60P, CSUN245-60P, CSUN250-60P, CSUN255-60P, CSUN260-60P
Canadian Solar	CS6X-300P, CS6X-305P, CS6X-310P, CS6X-315P, CS6X-320P, CS6P-255P, CS6P-260P, CS6P-265P, CS6P-260M, CS6P-265M, CS6V-210P, CS6V-215P, CS6V-220M, CS6V-225M, CS6K-265M, CS6K-270M, CS6K-290MS, CS6K-295MS, CS6K-300MS, CS6K-305MS
ET Solar	ET-P672300WW, ET-P672305WW, ET-P672310WW, ET-P672315WW
Hansol	HS300SE-V01, HS305SE-V01, HS310SE-V01, HS315SE-V01, HS320SE-V01, HS325SE-V01, HS330SE-V01, HS335SE-V01, HS340SE-V01
Hanwha Q Cells	Q.PEAK DUO-L-G4.2 365W, Q.PEAK DUO-L-G4.2 370W, Q.PEAK DUO L-G5.2 380W, Q.PEAK DUO L-G5.2 385W, Q.PEAK DUO L-G5.2 390W, Q.PEAK DUO L-G5.2 395W, Q.PEAK DUO-G5-BLK 305W, Q.PEAK DUO-G5-BLK 310W, Q.PEAK DUO-G5-BLK 315W, Q.PEAK DUO-G5-BLK 320W, Q.PEAK DUO-G5 315W, Q.PEAK DUO-G5 320W, Q.PEAK DUO-G5 325W, Q.PEAK DUO-G5 330W, Q.PEAK DUO-G5 305W, Q.PEAK DUO-G5 310W, Q.PEAK DUO-G5 315W, Q.PEAK DUO-G5 320W, Q.PRO L-G2 305, Q.PRO L-G2 310, Q.PRO L-G2 315
Hareon	HR-280P-24/Ba, HR-285P-24/Ba, HR-290P-24/Ba, HR-295P-24/Ba, HR-300P-24/Ba, HR-305P-24/Ba, HR-310P-24/Ba
Heliene	72P-285, 72P-290, 72P-295, 72P-300, 72P-310, 72P-320, 72P-325, 72P-330, 72P-335, 72P-340, 72M-345, 72M-350, 72M-360, 72M-365, 72M-370, 72M-BLK-345, 72M-BLK-350, 72M-BLK-360, 72M-BLK-365, 72M-BLK-370
Hyundai	HiS-M300TI, HiS-M305TI, HiS-M310TI, HiS-M315TI, HiS-M320TI, HiS-M325TI HiS-S325TI, HiS-S330TI, HiS-S335TI, HiS-S340TI, HiS-S345TI, HiS-S350TI

Itek Energy	IT250HE, IT255HE, IT260HE, IT265HE, IT270HE, IT275HE, IT280HE, IT285HE, IT290HE, IT295HE, IT300HE, IT305HE, IT310HE, IT315HE, IT295SE, IT300SE, IT305SE, IT310SE, IT315SE, IT350SE, IT355SE, IT360SE, IT365SE, IT370SE
JA Solar	JAM60D00-300/BP, JAM60D00-305/BP, JAM60D00-310/BP, JAM60D00-315/BP, JAM60D00-320/BP, JAM72D00-355/BP, JAM72D00-360/BP, JAM72D00-365/BP, JAM72D00-370/BP, JAM72D00-375/BP, JAM72S09-375/PR, JAM72S09-380/PR, JAM72S09-385/PR, JAM72S09-390/PR, JAM72S09-395/PR, JAM72S10-390/PR, JAM72S10-395/PR, JAM72S10-400/PR, JAM72S10-405/PR, JAM72S10-410/PR, JAM72S01-365/PR, JAM72S01-370/PR, JAM72S01-375/PR, JAM72S01-380/PR, JAM72S01-385/PR, JAP6 72-280/3BB, JAP6 72-285/3BB, JAP6 72-290/3BB, JAP6 72-295/3BB, JAP6 72-300/3BB, JAP6 72-305/3BB, JAP6 72-310/3BB, JAP6 72-315/3BB, JAP6 72-320/3BB
Jinko	JKM315M-60HL, JKM320M-60HL, JKM325M-60HL, JKM330M-60HL, JKM335M-60HL, JKM340M-60HL, JKM345M-60HL, JKM305M-60L, JKM310M-60L, JKM315M-60L, JKM325M-60L, JKM370-72L-V, JKM375-72L-V, JKM380-72L-V, JKM385-72L-V, JKM390-72L-V, JKM380-72HL-V, JKM385-72HL-V, JKM390-72HL-V, JKM395-72HL-V, JKM400-72HL-V
Kyocera	KD315GX-LFB, KU260-6MCA, KU265-6MCA, KD255GX-LFB2, KD260GX-LFB2
LG	LG275S1C-G4, LG280S1C-G4, LG285S1C-G4, LG300N1C-G4, LG300N1K-G4, LG300N1T-G4, LG305N1C-G4, LG305N1K-G4, LG310N1C-G4, LG310N1K-G4, LG310N1T-G4, LG315N1C-G4, LG320N1C-G4, LG335S2W-G4, LG340S2W-G4, LG360N2W-B3, LG365N2W-B3, LG365N2W-G4, LG370N2W-G4, LG375N2W-G4, LG380N2W-G4, LG385N2W-G4, LG390N2W-A5, LG395N2W-A5, LG400N2W-A5, LG405N2W-A5, LG410N2W-A5, LG415N2W-A5, LG420N2W-A5, LG425N2W-A5
LONGi	LR6-60PE-BOW-310W, LR6-60HPH-BOB-310W, LR672HPH-SOW-380W
Mission Solar	MSE290SQ5T, MSE295SQ5T, MSE300SQ5T, MSE300SQ8T, MSE305SQ8T, MSE310SQ8T, MSE340SO9J, MSE345SO9J, MSE350SO9J, MSE365SQ9S, MSE370SQ9S, MSE375SQ9S
Mitsubishi	PV-MLE270HD, PV-MLE275HD, PV-MLE280HD
Panasonic	VBHN325SA16, VBHN330SA16
Phono Solar Tech	PS255M-20/U, PS260M-20/U, PS265M-20/U, PS270M-20/U, PS275M-20/U, PS280M-20/U, PS300P-24T, PS305P-24T, PS310P-24T, PS315P-24T, PS320P-24T, PS325P-24T
REC Solar	REC310NP, REC315NP, REC320NP, REC325NP, REC330NP, REC275TP2, REC280TP2, REC285TP2, REC290TP2, REC295TP2, REC300TP2, REC275TP2 BLK2, REC280TP2 BLK2, REC285TP2 BLK2, REC330TP2S 72, REC335TP2S 72, REC340TP2S 72, REC345TP2S 72, REC350TP2S 72, REC355TP2S 72
Renesola	JC 255 M-24/Bbs, JC 260 M-24/Bbs, JC 265 M-24/Bbs, JC 270 M-24/Bbs, JC 250 M-24/Bb, JC 255 M-24/Bb, JC 260 M-24/Bb, JC 305 M-24/Abs, JC 310 M-24/Abs, JC 315 M-24/Abs, JC 320 M-24/Abs, JC 325 M-24/Abs, JC 330 M-24/Abs, JC 335 M-

	24/Abs, JC 330 S-24/Abs, JC 335 S-24/Abs, JC 340 S-24/Abs, JC 345 S-24/Abs, JC 270 S-24/Bbs, JC 280 S-24/Bbs, JC 285 S-24/Bbs
Sanyo	HIP-190BA3, HIP-195BA3, HIP-200BA3, HIP-205BA3, HIT-N215A01, HIT-N220A01, HIT-N225A01
Seraphim	SRP-335-6MA, SRP-340-6MA, SRP-345-6MA, SRP-350-6MA, SRP-360-6MA, SRP-365-6MA, SRP-370-6MA, SRP-375-6MA, SRP-330-6MA-DG, SRP-335-6MA-DG, SRP-340-6MA-DG, SRP-345-6MA-DG, SRP-355-6MA-DG, SRP-360-6MA-DG, SRP-365-6MA-DG, SRP-370-6MA-DG, SRP-280-6MB, SRP-285-6MB, SRP-290-6MB, SRP-295-6MB, SRP-300-6MB, SRP-305-6MB, SRP-310-6MB, SRP-315-6MB, SRP-275-6MB-DG, SRP-280-6MB-DG, SRP-285-6MB-DG, SRP-290-6MB-DG, SRP-295-6MB-DG, SRP-300-6MB-DG, SRP-305-6MB-DG, SRP-310-6MB-DG, SRP-315-6MB-DG, SRP-280-6MB-HV, SRP-285- SRP-280-6MB, SRP-285-6MB, SRP-290-6MB, SRP-295-6MB 6MB-HV, SRP-290-6MB-HV, SRP-295-6MB-HV, SRP-300-6MB-HV, SRP-305-6MB-HV, SRP-310-6MB-HV, SRP-315-6MB-HV, SRP-325-6PA, SRP-330-6PA, SRP-335-6PA, SRP-340-6PA, SRP-320-6PA-DG, SRP-330-6PA-DG, SRP-335-6PA-DG, SRP-340-6PA-DG, SRP-325-6PA-HV, SRP-330-6PA-HV, SRP-335-6PA-HV, SRP-340-6PA-HV, SRP-270-6PB, SRP-275-6PB, SRP-280-6PB, SRP-285-6PB, SRP-265-6PB-DG, SRP-270-6PB-DG, SRP-275-6PB-DG, SRP-280-6PB-DG, SRP-270-6PB-HV, SRP-275-6PB-HV, SRP-280-6PB-HV, SRP-285-6PB-HV
Silfab	SLA280M, SLA285M, SLA290M, SLA295M, SLA300M, SLA310M, SLA315M, SLA320M, SLG335M, SLG340M, SLG345M, SLG350M, SLG355M, SLG360M, SLG370M, SLG380M, SLA320MCH, SLA320MWT
Solaria	PowerXT-350R-AC, PowerXT-355R-AC, PowerXT-360R-AC, PowerXT-320R-BX, PowerXT-325R-BX, PowerXT-325R-PX, PowerXT-330R-PX, PowerXT-340R-BD, PowerXT-345R-BD, PowerXT-345R-PD, PowerXT-350R-PD, PowerXT-355R-PD, PowerXT-360R-PD, PowerXT-410C-PD, PowerXT-420C-PD, PowerXT-430C-PD
SolarWorld (V2.5 frame)	Sunmodule SW series: SW 220 mono and poly, SW 225 poly, SW 230 poly, SW 235 poly, SW 240 mono and poly, SW 245 mono and poly, SW 250 mono, SW 255 mono, SW 260 mono, SW 265 mono, SW 270 mono Sunmodule Plus series: 285W mono, 280W mono, 275W mono, 270W mono, 265W mono, 260W mono, 255W mono, 250W mono, Sunmodule Protect 275W mono, Sunmodule Protect 270W mono, Sunmodule Protect 265W mono, Sunmodule SW 245 - 255 poly / Pro-Series
SolarWorld (33mm frame)	Sunmodule Pro-Series: 250W poly, 255W poly, 260W poly, 315W XL mono, 320W XL mono, 325W XL mono, 330W XL mono, 335W XL mono, 340W XL mono, 345W XL mono, 350W XL mono Sunmodule Plus: 260W mono, 270W mono, 275W mono, 280W mono, 285W mono

Stion	STO-135A, STO-140A, STO-145A, STO-150A
SunEdison	F310EzD, F315EzD, F320EzD, F325EzD, F330EzD, F335EzD, F310EzC, F315EzC, F320EzC, F325EzC, F330EzC, F335EzC, R330EzC, R335EzC, R340EzC, R345EzC, R350EzC, R355EzC
SunPower	SPR-318E-WHT-D, SPR-A400, SPR-A415, SPR-A425, SPR-E19-235, SPR-E19-310-COM, SPR-E19-320, SPR-E20-245, SPR-E20-327, SPR-E20-320-COM, SPR-E20-327-COM, SPR-E20-435-COM, SPR-E20-327-D-AC, SPR-P17-330-COM, SPR-P17-335-COM. SPR-P17-340-COM, SPR-P17-345-COM, SPR-P17-350-COM, SPR-P17-355-COM, SPR-P17-360-COM, SPR-X20-250-BLK, SPR-X20-250-BLK-B-AC, SPR-X20-327-C-AC, SPR-X21-335-BLK, SPR-X21-335-BLK-D-AC, SPR-X21-335-D-AC, SPR-X21-345, SPR-X21-345-COM, SPR-X21-345-D-AC, SPR-X21-350-BLK, SPR-X21-350-BLK-D-AC, SPR-X21-355-BLK, SPR-X21-445-COM, SPR-X21-460-COM, SPR-X21-460-COM, SPR-X21-470-COM, SPR-X22-360, SPR-X22-370, SPR-X22-360-COM, SPR-X22-360-D-AC, SPR-X22-370-D-AC
Trina	TSM-225 PC/PA05, TSM-230 PC/PA05, TSM-235 PC/PA05, TSM-240 PC/PA05, TSM-245 PC/PA05
Yingli	YL230P-29b, YL235P-29b, YL240P-29b, YL245P-29b

Fault Current Path Diagram

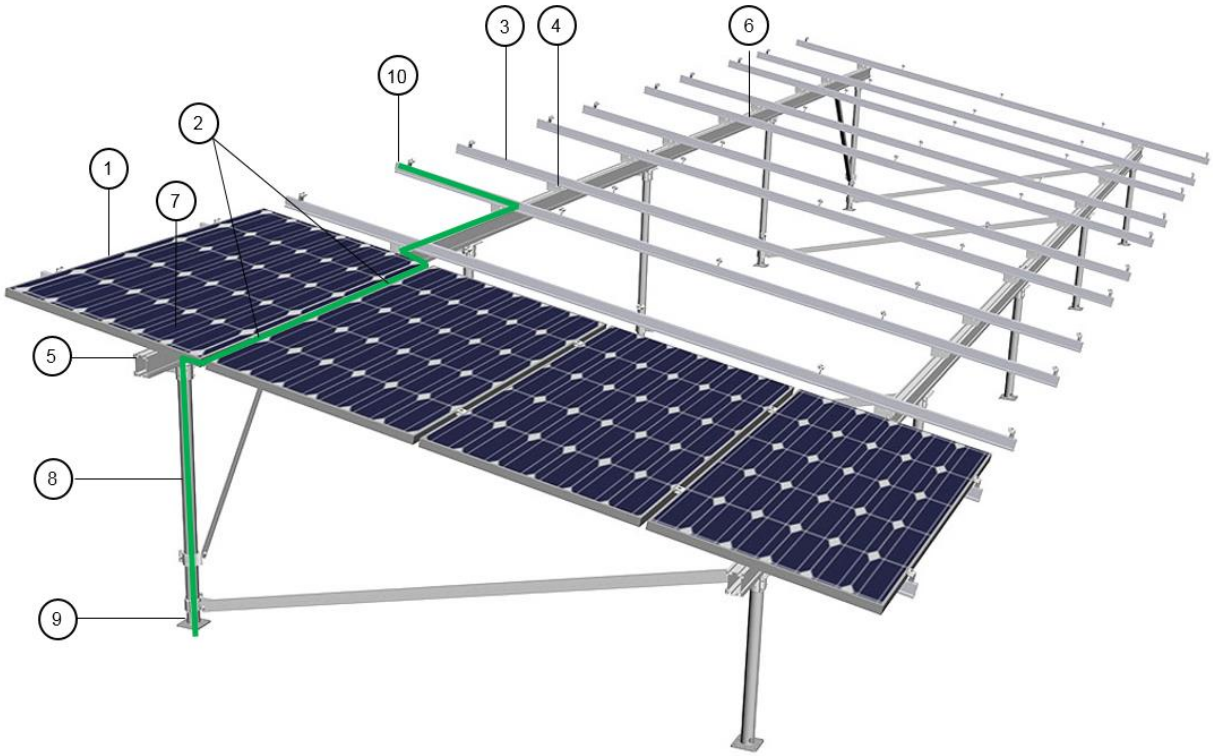

Items are listed in the fault current path in order from the PV Panel to the Post Base:

1. PV Panel
2. Grounding Mid Clamp Kit
3. Helio Rail HR150, HR250, HR350 or HR500
4. Angle Mount Bracket Kit
5. SB2500 Aluminum Beam
6. SB2500 Splice Kit (configuration dependent)
7. Pipe Cap Kit
8. Vertical Post
9. 2” Post Base Kit
10. Grounding Lug

Fault Current Path

Tools Required for Installation

Electric Drill or impact driver. *Note that the use of an impact driver is strongly discouraged for all stainless nut and bolt hardware.*	
Roofing Bar	
Drill Bit for lag bolts, pilot hole 7/32” diameter for 5/16” lag bolt	
3/8” Socket wrench	
Sockets for 3/8” drive sockets, 7/16”, 1/2”, 9/16” and 1-1/16”	
Torque Wrench 3/8” drive, 0 to 35 ft. lbs.	
Anti-seize compound (Permatex 80071 or equivalent).	
Caulk gun and silicon sealant • ChemLink M1 (or equivalent) for wood and composite roofs. • ChemLink DuraLink (or equivalent) for metal roofs.	

Tape measure

Saws for cutting aluminum posts and rails as necessary

Torque Values for EZ SunBeam Components

These maximum torque values must be adhered to, both for mechanical strength and to insure the performance of the integral grounding and bonding features. It is recommended that anti-seize compound be applied to the screw threads and a torque wrench be used to measure the bolt torque during final assembly.

Hardware	Torque lbs.
1/4-20 Bolts and Hex Flange Nut	7.5 ft. lbs.
1/4-20 Ground Lug, Flange Nut with 7/16 Hex Head	7.5 ft. lbs.
1/4-20 Ground Lug, Setscrew with 1/8 Allen drive.	4.2 ft. lbs. (50 in. lbs.)
1/4-20 Mid or End Clamp, Female Standoff with 7/16" Hex Head Collar Nut	7.5 ft. lbs.
5/16 X 4" Lag Bolt	25 ft. lbs.
3/8-16 Bolts and Hex Flange Nuts	15 ft. lbs.
3/8-16 T-Bolts and Hex Flange Nuts	15 ft. lbs.
3/8-16 Setscrew with 3/16" Allen	10 ft. lbs.
1/2-13 Nut and Bolt to mount Post to Base Plate	20 ft. lbs.
#12 X 3/4" Self-drilling bonding screw	6 ft. lbs.
M10 Set screws	20 ft. lbs.

EZ SunBeam Tilt-Up System Overview

The EZ SunBeam Tilt-Up system is robust, versatile and specially engineered for multiple configurations. Angles from 10º to 50º can easily be accommodated with the EZ SunBeam Tilt-Up System components. Portrait and landscape oriented PV panels are easy to configure.

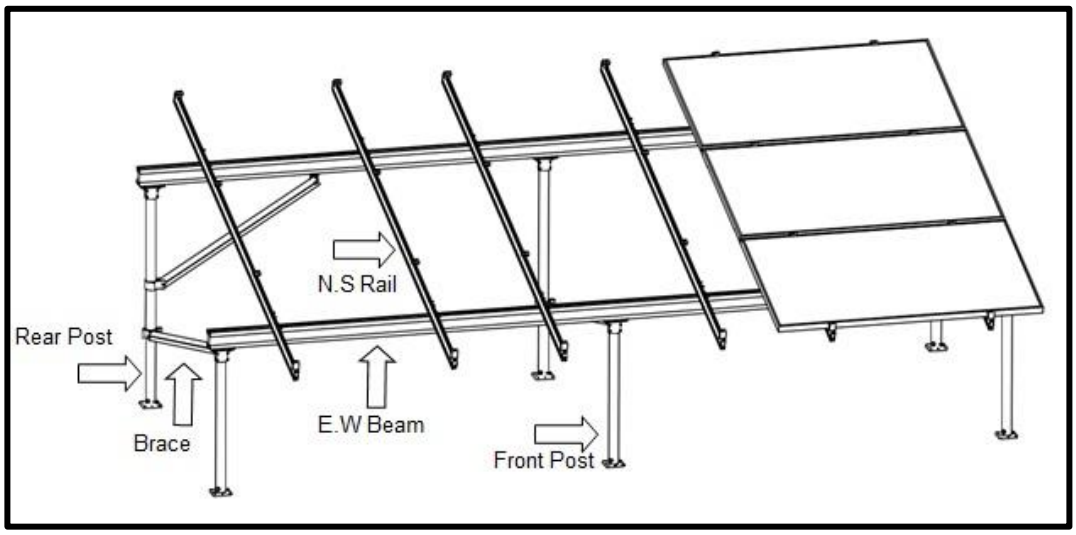

The diagram below shows a typical SunBeam Tilt-Up configuration and dimensions as viewed from the East Typical.

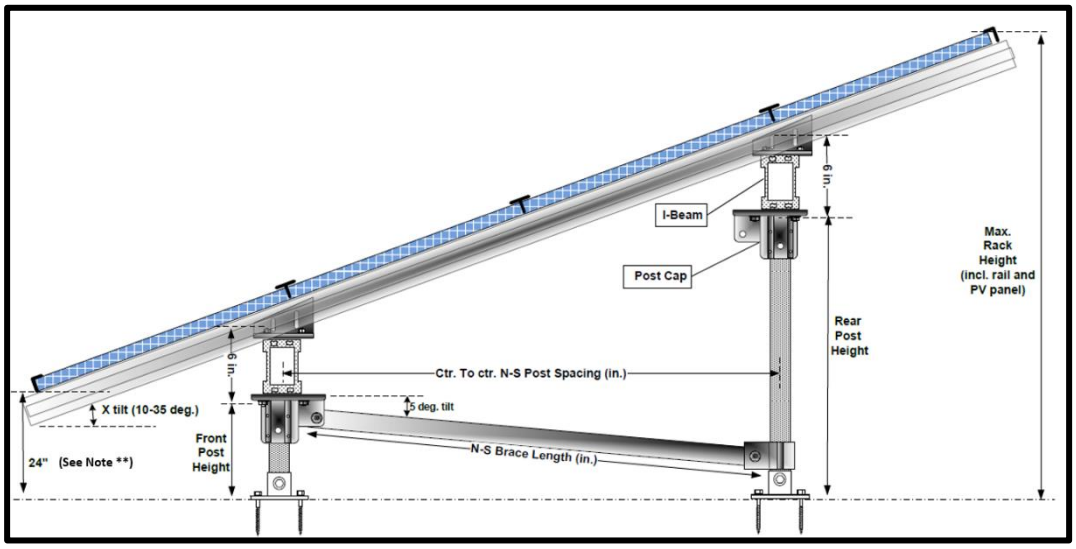

Note: Minimum leading edge height to meet a UL1703 PV module fire standard is 24-inches.

EZ SunBeam Flat Roof System Overview

The EZ SunBeam Flat Roof system is perfect to elevate above obstructions like HVAC, pipes and vents. By spanning over obstacles, the SunBeam Flat Roof system takes full advantage of the available roof space. It is recommended that at least 4º tilt be used for flat mounting to stop rain pooling. Check your plumbing code for height clearance requirements.

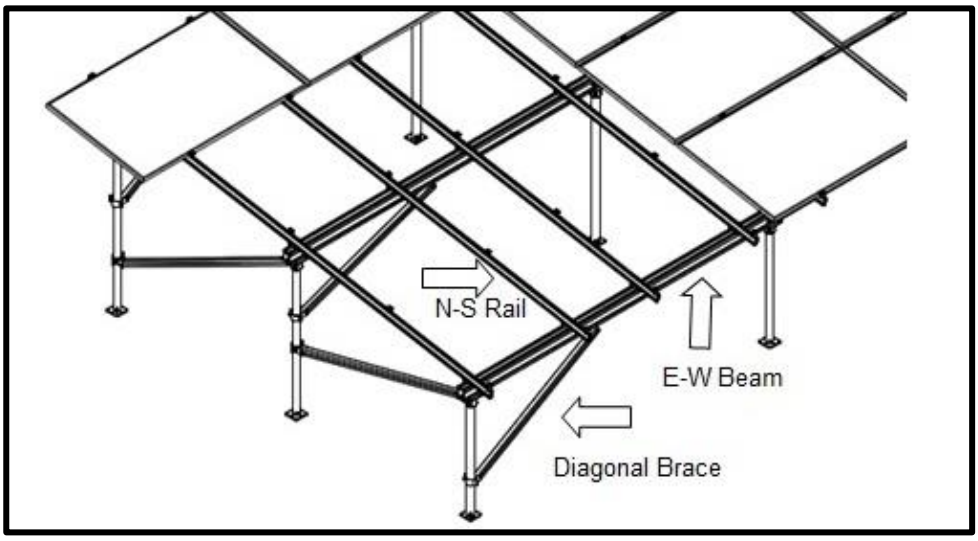

The diagram below shows a typical Flat Mount Rooftop system configuration and dimensions as viewed from the East.

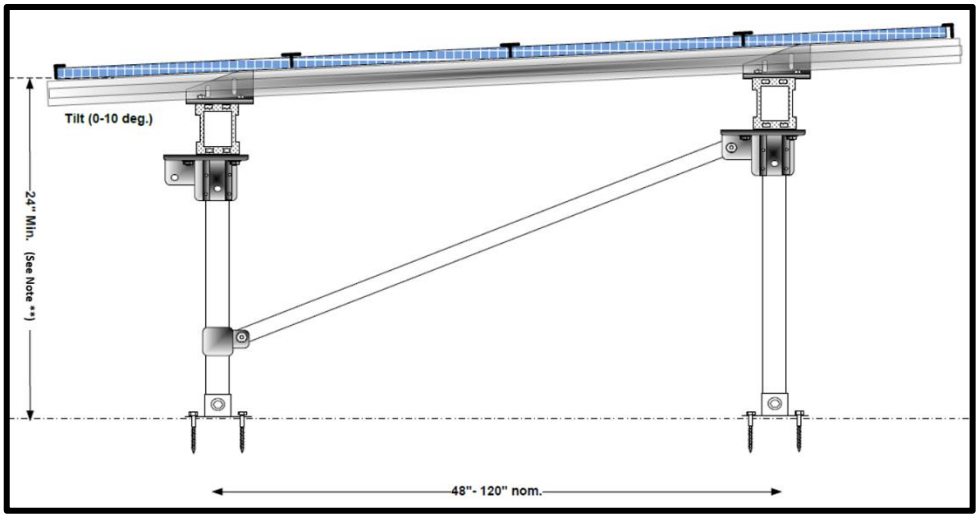

Note: Minimum leading edge height to meet a UL1703 PV module fire standard is 24-inches.

Installation Instructions:

Post Base Plate 4 Screw Installation

Two and four hole mounting in the Post Base Plate can be used. Your structural Engineer should specify the particular type, diameter and length of the mounting screws. A number of mounting options are available to mount Post Base Plate to the roof of a given building. These include fastening to wood roof joists, fastening to various metal beams and roofs, and fastening to reinforced concrete roof surfaces. This figure shows the use of the 4 corner holes in the Post Base Plate for mounting using 5/16" Lag Bolts.	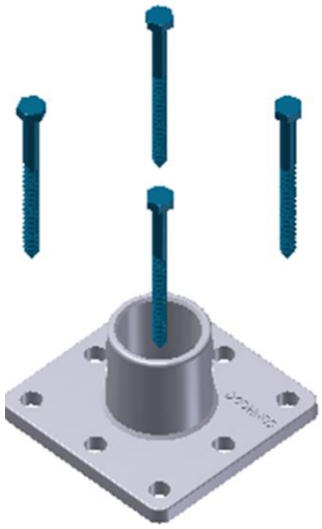

Post Base Plate 2 Screw Installation

This figure shows the use of 2 corner holes in the Post Base Plate for mounting using 3/8" Lag Bolts.	

Installing on a Wood Truss Roof

Rough mark the E-W and N-S desired post locations. Identify the underlying joist positions to support your proposed layout under the roofing. Locate the Post Base Plate per the layout and fasten to the roof deck. Various fastenings may include lag screws, concrete anchors or self-drilling metal screws. The lag screw mount must be secured to the center 1/3 of the roof joist.	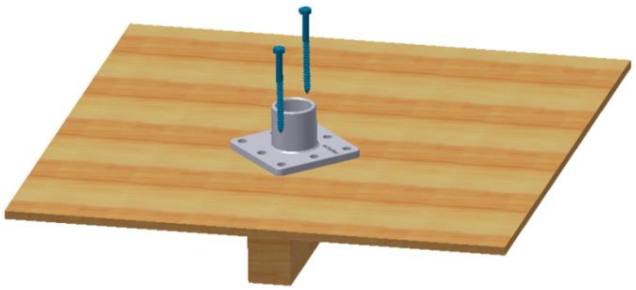
After locating the joist, mark that point. Use a pilot bit 7/32” to drill a pilot hole no more than 3” deep (drill stop will ensure accurate depth). Clean sawdust with drill and fill hole with sealant, Cheam-link construction sealant or equivalent.	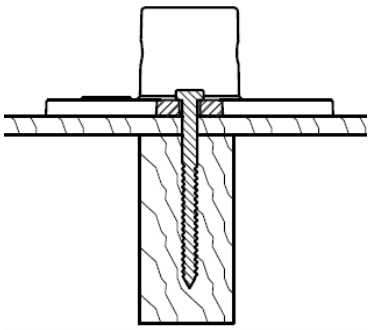 This cross section shows the mounting of a Post Base Plate using lag screws fastened into the wood roof joist. Note that the screw must be fastened into the center 1/3 of the wood joist.

Installing on a Reinforced Concrete Roof

There are many ways to attach structural members and fixtures to concrete, and the choice of anchoring system depends on a variety of factors. A Structural Engineer should specify the type of concrete fastener to be used.

For new construction consult SunModo before starting your project.

Drill the holes in the concrete and follow the manufacturer's recommendation on the installation and torque to be used with a particular fastener type.

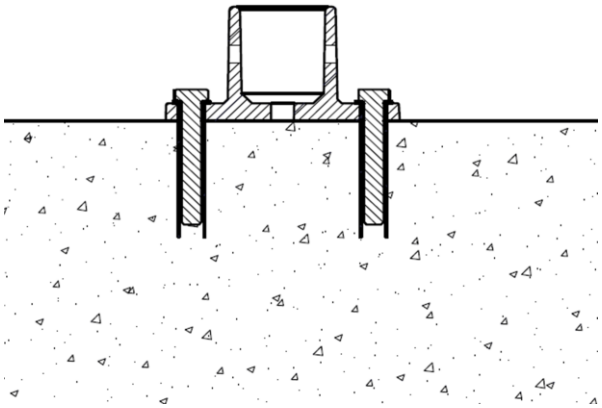

This cross section shows the mounting of a Post Base Plate to a precast concrete block.

Installing on a Steel Beam Roof

A Structural Engineer should specify the method of locating and fastening to a steel roof. Various designs may require the fastening to the Q-decking or directly to the underlying beams.

After locating the Post Base Plate position, mark the holes.

Drill the holes in the roof and follow the manufacturer's recommendation on the installation and torque to be used with a particular fastener type.

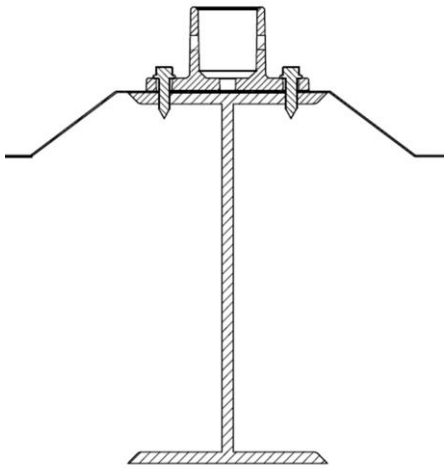

This cross section shows a method for fastening Post Base Plate to steel beam.

Post Base Plate to Post Assembly

Insert the Post into the Post Base and secure using the three 3/8 Bolts provided. Torque to 15 ft. lbs.	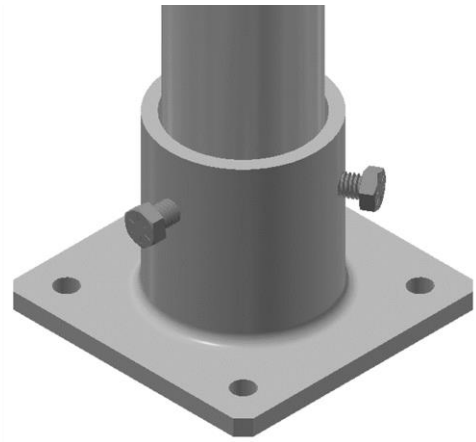

Post Base Plate Flashing

After installing the Post on the Post Base and securing the post and bonding of the base, the post can be flashed into the roof system. Shown here is a roofer installing a membrane boot to a membrane roof.	 Seal the roof around the post. A professional roofer may be called to perform this task.

Pipe Cap to Post Attachment

Position the Pipe Cap on top of the Post and secure using the Allen Screws provided. The Pipe Cap can be moved up and down approximately 2” to allow for leveling of the Pipe Cap relative to the SunBeam. Torqued to 20 ft. lbs. with a 5mm Allen head drive.	

SunBeam to Pipe Cap Attachment

Insert the supplied 3/8” T-Bolts into the rail slots of the SB2500 SunBeam and through the slots of the Pipe Cap. Secure using 3/8” Flange Nuts. Torque to 15 ft. lbs.	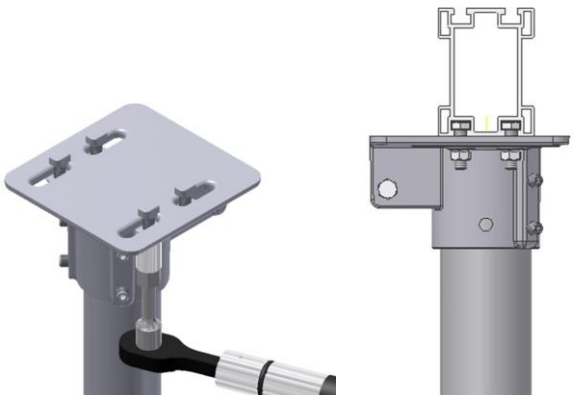

Angle Mount to SunBeam Attachment

Attach the Angle Mount to the top of the SunBeam in orientation shown. Use the two supplied 3/8” T-Bolts and Flange Nuts to secure. Torque to 15 ft. lbs.	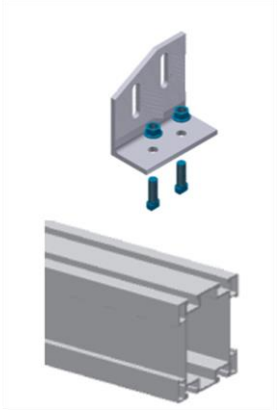

Angle Mount to Rail Attachment

Attach the Angle Mount to the Rail using two 3/8” T-Bolts and Flange Nuts. Locate the T-Bolts in the lowest position in the Angle Mount slots. Once the proper angle for the Rail is set, the Flange Nuts can be tightened. Torque to 15 ft. lbs.	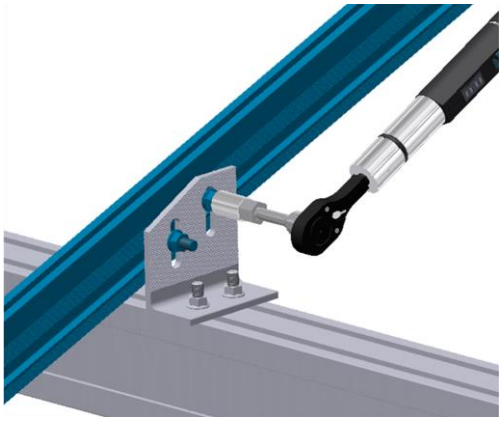

1/4” Slot Rail Splice Attachment

Where a splice is required for the Helio Rails, the splice should be inserted before the rails are fastened in place. A 4X 1/4”-20 bolt version of the self-grounding splice can be installed to join rail sections together. Torque 1/4” Flange Nuts to 7.5 ft. lbs.	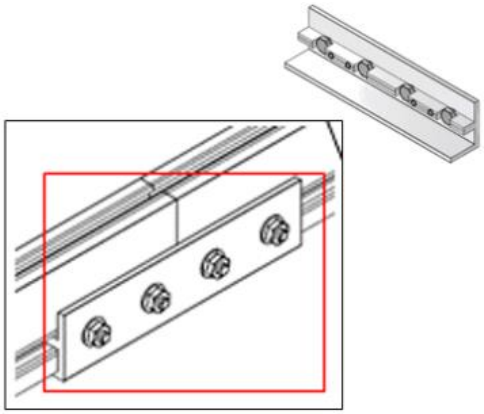

3/8” Slot Rail Splice Attachment

Where a splice is required for the Helio Rails, the splice should be inserted before the rails are fastened in place. A 2X 3/8”-16 bolt version of the self-grounding splice can be installed to join rail sections together. Torque 3/8” Flange Nuts to 15 ft. lbs.	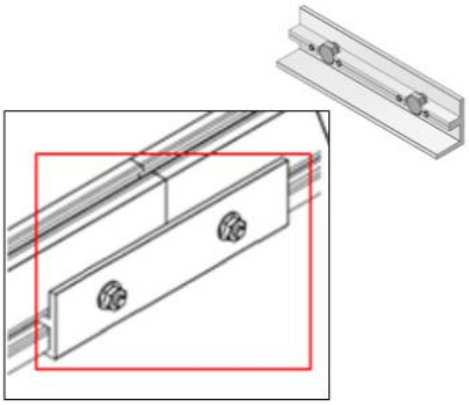

Brace to Pipe Cap Attachment

Where bracing is required, the Brace can be installed onto the Post Cap on one end as shown.

A single 3/8-16 X 3-1/2” Hex Bolt and Flange Nut are required. The Star Washer supplied with the kit must be installed under the head of the bolt as shown. Torque to 15 ft. lbs.

Attach the other end of the Brace to the Post using a Post Clamp.

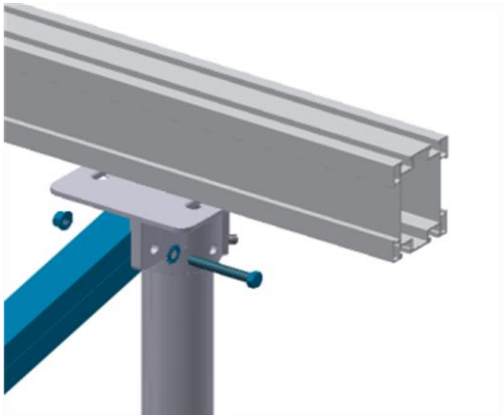

Pipe Clamp to Post Attachment

Where bracing is required to a post, a sliding Pipe Clamp is installed as shown. The sliding Pipe Clamp is secured with a 3/8-16 X 2” Hex Bolt and Flange Nut. Torque to 15 ft. lbs.

Install the two Grounding Setscrews in the Pipe Clamp as shown. Using a 5mm hex driver torque to 10 ft. lbs.

The Brace can now be attached to the Post and Pipe Clamp.

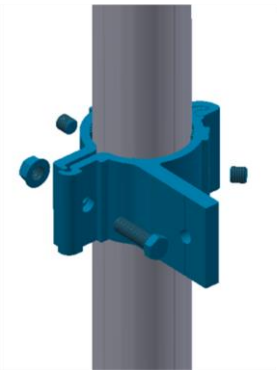

Pipe Clamp to Brace Attachment

Where bracing is required to a post, the Brace can be installed onto the Pipe Clamp attached to the Post as shown.

A single 3/8-16 X 3-1/2” Hex Bolt and Flange Nut are required. The Star Washer supplied with the kit must be installed under the head of the bolt as shown. Torque to 15 ft. lbs.

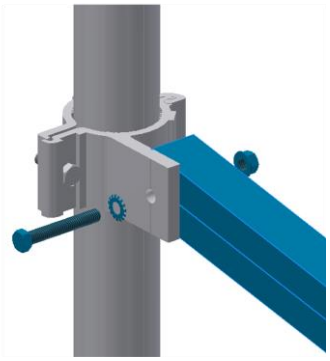

L-Foot to SunBeam Attachment

Diagonal bracing can be installed between a vertical Post and the SunBeam using an L-Foot. Mount the L-Foot to the bottom of the SunBeam using a 3/8” T-Bolt and Flange Nut. Torque to 15 ft. lbs.	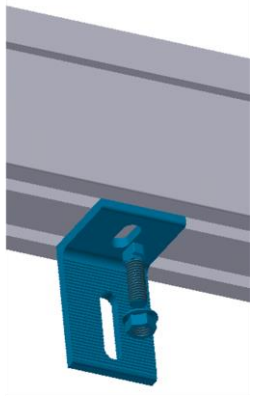

L-Foot to Brace Attachment

Where bracing is required to a SunBeam, the Brace can be attached to an L-Foot as shown. A single 3/8-16 X 3-1/2” Hex Bolt and Flange Nut are required. The Star Washer supplied with the kit must be installed under the head of the bolt as shown. Torque to 15 ft. lbs.	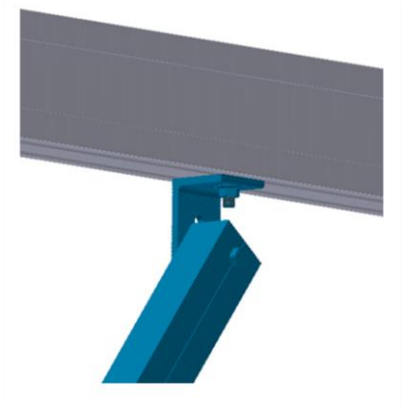

Splice to SunBeam Attachment

Where a splice is required for the SunBeam, the splice should be inserted before the SunBeam is fastened in place.

Slide the SunBeam Splice onto the end of the SunBeam as shown.

Attach the SunBeam Splice using two supplied 3/8” T-Bolts and Flange Nuts. Torque to 15 ft. lbs.

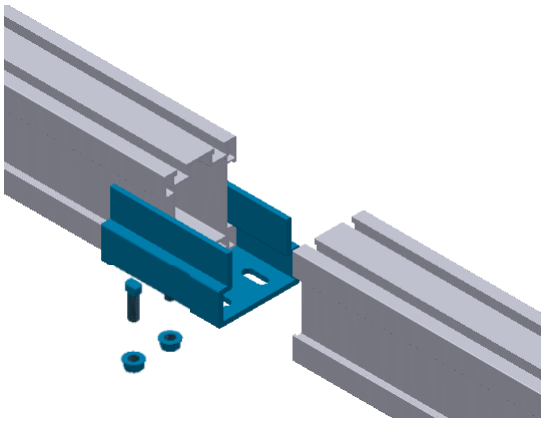

SunBeam to SunBeam Attachment

Complete the splice by sliding the SunBeam into the SunBeam Splice as shown.

Attach the SunBeam Splice using two supplied 3/8” T-Bolts and Flange Nuts. Torque to 15 ft. lbs.

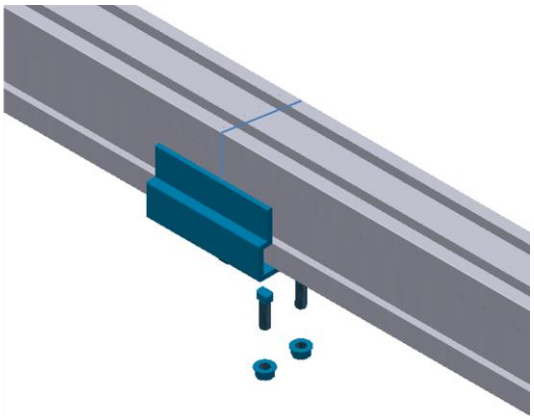

Rack Leveling

At this time during the installation, the spacing and leveling of the rack should be checked and adjusted as necessary.

PV Panel Mounting

PV Panel Overhang

For PV panels installed in the Portrait or Landscape orientation the panels can extend beyond the E-W Beam a maximum of 25% of the panel length (Check panel manufacturers mounting requirements).

For a SunBeam system the E-W Beam can extend beyond the Post a maximum of 25% of the E-W Beam length.

The combined maximum cantilever of the PV panel and E-W Beam is 1/3 of the post Span.

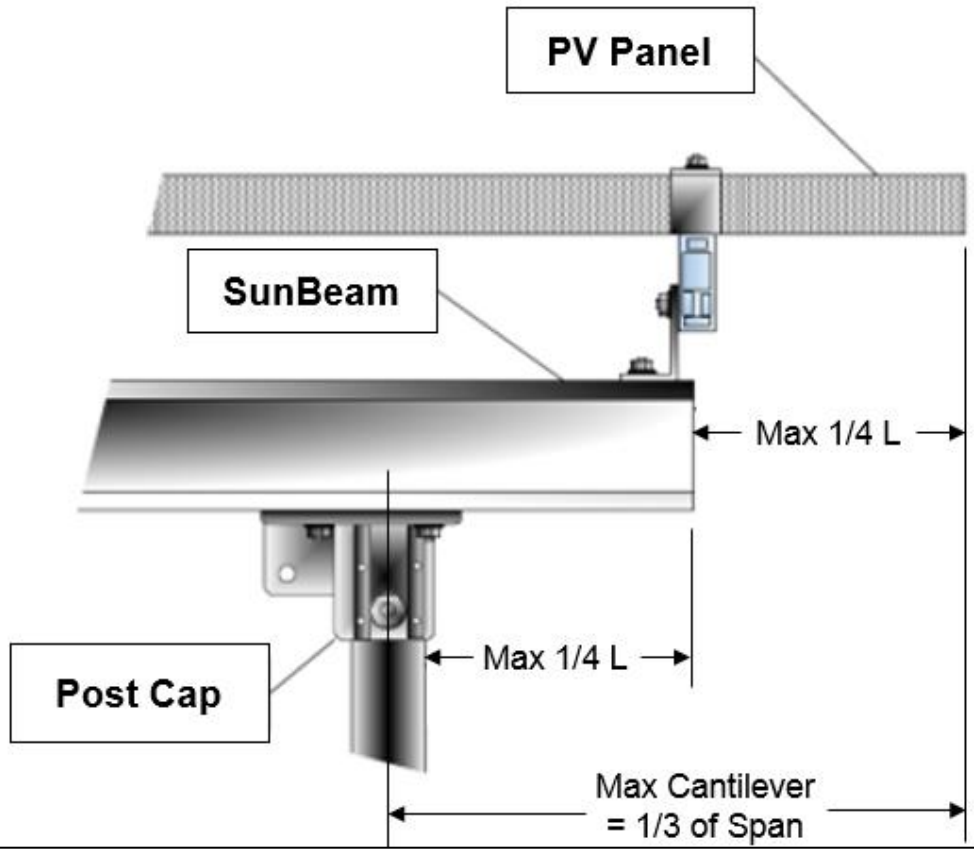

Vertical Mount Pipe Cap Kit

SunModo has developed this product for times when a cost effective solution is required for distributing point loads on the roof. The Vertical Mount Pipe Cap Kit is ideal because it attaches to the Rail using one 3/8" T-Bolt. No more sliding the bolts down the length of the Rail, the Side Mount Post Cap attaches where you need it.

Position the Vertical Mount Pipe Cap Kit on top of the Post and secure using the Allen Screws provided. Torqued to 10 ft. lbs. with a 5mm Allen head drive.

Insert the supplied 3/8" T-Bolts into the rail slot and through the slots of the Side Mount Pipe Cap. Secure using 3/8" Flange Nuts. Torque to 15 ft. lbs.

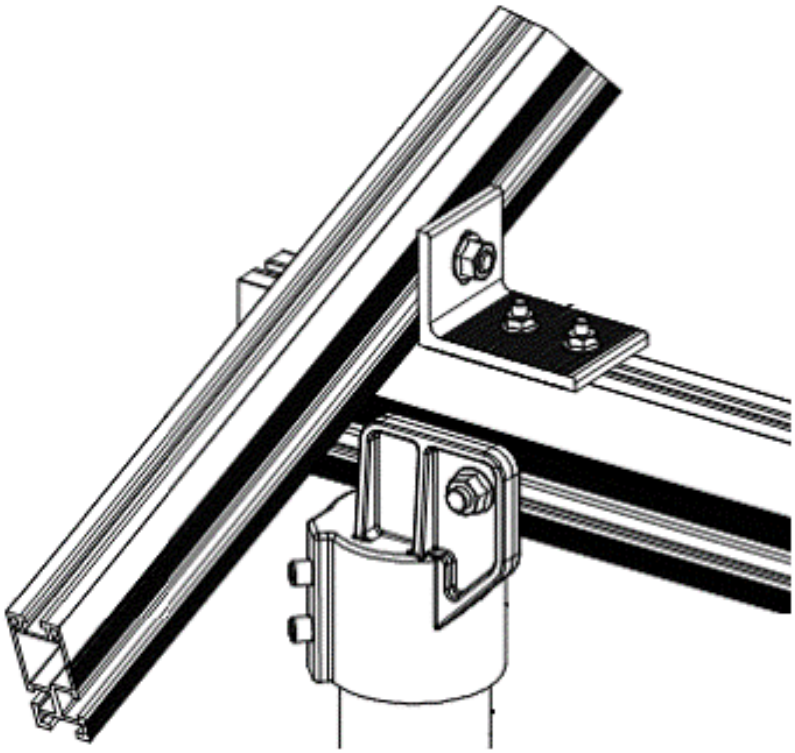

Clamp Installation – Portrait Orientation

Proceed with the mounting of the PV panels using the mid and end clamps. Specific mounting instructions are shown in the following sections for Portrait and Landscape mounting.

Installing Mid Clamps: A mid clamp is used between PV panels. It will produce 1/2" spacing between PV panel frames.

An End Clamp is used to secure PV panels at the ends of a row.

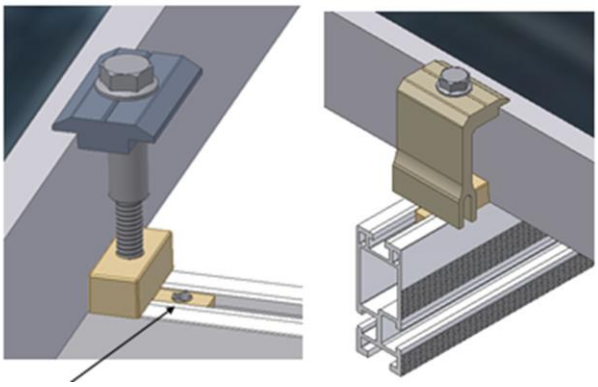

End Clamp Installation

There must be a minimum of 1.5 inches of Rail extending beyond the PV panel frame.

Clamp the PV panel frame by inserting the T-Bolt into the Rail slot. Position the End Clamp firmly against the PV panel frame and secure using the 1/4-20 Collar Nut. Using a 7/16" socket, torque to 7.5 ft. lbs.

Note: When two or more PV panels are installed grounding via the End Clamp is optional. For a single panel configuration (shown), insert the T-Bolt into a T-Bolt Holder for grounding the panel to the Rails.

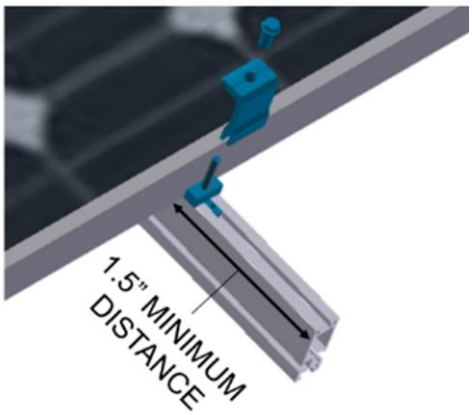

Mid Clamp Attachment

Insert the T-Bolt in the Rail slot and turn clockwise 90° to engage the head into the slot. Insert Grounding T-Bolt Holder to lock T-Bolt in place.

Thread the 1/4-20 Collar Nut onto the top of the T-Bolt as shown. After positioning the Mid Clamp firmly against the PV panel frame, using a 7/16" socket, tighten to 7.5 ft. lbs.

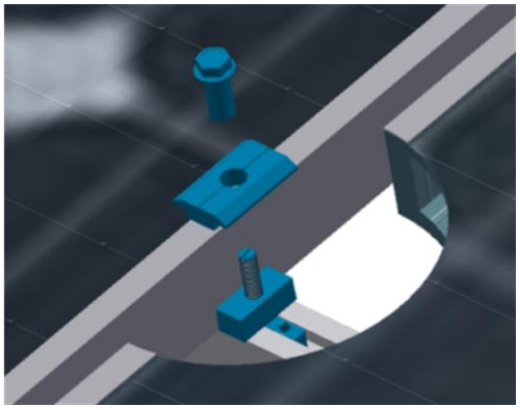

Clamp Installation – Landscape Orientation

Proceed with the mounting of the PV panels using the mid and end clamps. Specific mounting instructions are shown in the following sections for Portrait and Landscape mounting.

Installing Mid Clamps: A mid clamp is used between PV panels. It will produce 1/2" spacing between PV panel frames.

An End Clamp is used to secure PV panels at the ends of a row.

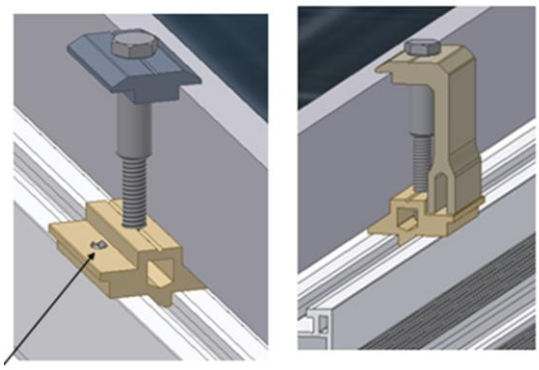

End Clamp with Shared Rail Adaptor Installation

End Clamps are used at the ends of a row of PV panels.

Insert the T-Bolt in the Rail slot and turn clockwise 90° to engage the head into the slot. Insert Grounding T-Bolt Holder to lock T-Bolt in place.

Thread the 1/4" Collar Nut onto the top of the T-Bolt as shown. After positioning the End Clamp firmly against the PV panel frame, using a 7/16" socket, tighten to 7.5 ft. lbs.

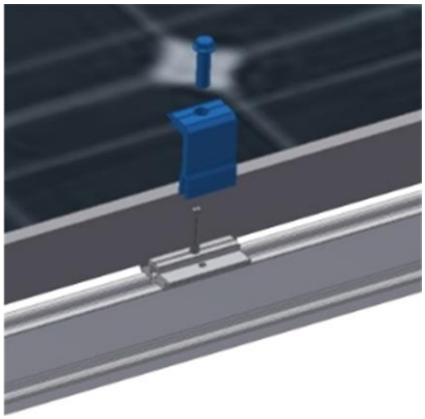

Mid Clamp Installation

Insert the T-Bolt in the Rail slot and turn clockwise 90° to engage the head into the slot. Insert Grounding T-Bolt Holder to lock T-Bolt in place.

Thread the 1/4" Collar Nut onto the top of the T-Bolt as shown. After positioning the Mid Clamp firmly against the PV panel frame, using a 7/16" socket, tighten to 7.5 ft. lbs.

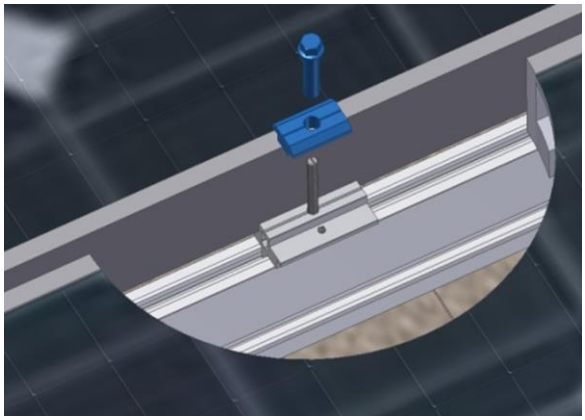

Ground Wire Attachment

The picture shows a single grounding lug mounted on one Rail and a #6 solid copper grounding wire connecting the Ground Lugs to the building ground per NEC 690.47.

The self-bonding system is for use with PV modules that have a maximum series fuse rating of 30A.

Ground Lug Installation

One Rail should have a Ground Lug for fastening the ground conductor to the array. The Ground Lug is mounted on the top or side of the Rail using a special 1/4" T-Bolt, Grounding Spacer, and Flange Nut. Grounding Lugs K10179-001, and detailed installation document D10003 are available from SunModo separately.

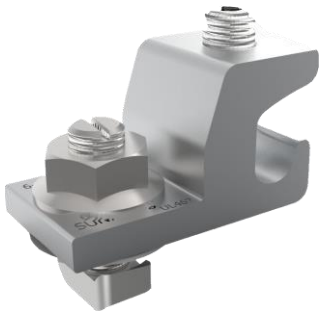

Rail End Covers

Rail End Covers can be attached to the mounting rails as shown.

Rail End Covers are also available for the SunBeam Rail not shown.

UL 2703 Label Placement

When requested the UL 2703 Label can be located on the Rail or Rail Splice.

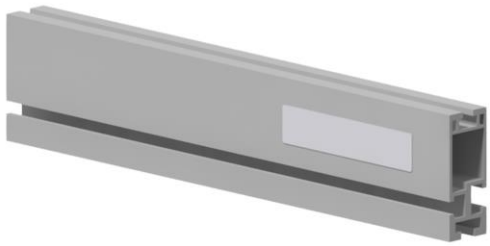

See www.sunmodo.com for current warranty documents and information.

SunModo Corporation
Ph: 360-844-0048